From:	Eric Sugalski <eric@bostondevice.com>
Sent:	Tuesday, May 31, 2011 3:05 PM CDT
To:	Nathan Moskowitz <nmosk@hotmail.com>; andy moskowitz <andymoskow@gmail.com>
CC:	David Schoon <dschoon@bostondevice.com>
Subject:	updated models
Attachments:	110531_fusionWedge_open.EASM, 110531_fusionWedge_closed.EASM

Hi Nathan & Andy -

There were a number of structural and fabrication issues with the last model sent to you. We have modified the parts and attached the latest version in both opened and closed formats. Please review and provide us with your feedback at your earliest convenience.

Regards,

Eric

--
Eric Sugalski
Boston Device Development, Inc
office - (617) 279-0057 x703
mobile - (617) 852-6622
www.bostondevice.com

On Thu, May 26, 2011 at 10:25 PM, Nathan Moskowitz <nmosk@hotmail.com> wrote:

Eric,
Unfortunately tomorrow I will not be available all day.
I am available at any time on Sunday.
Nathan

From: eric@bostondevice.com
Date: Thu, 26 May 2011 20:19:47 -0400
Subject: web conference - tomorrow at AM?
To: nmosk@hotmail.com; andymoskow@gmail.com
CC: dschoon@bostondevice.com

Hi Andy & Nathan -

Are you available for a web conference (gotomeeting) tomorrow AM to review the design updates? Our schedule is open, so please let me know if there is a time that

works best for you. I will send you the web link and dial information after we nail down the timing.

Thanks,
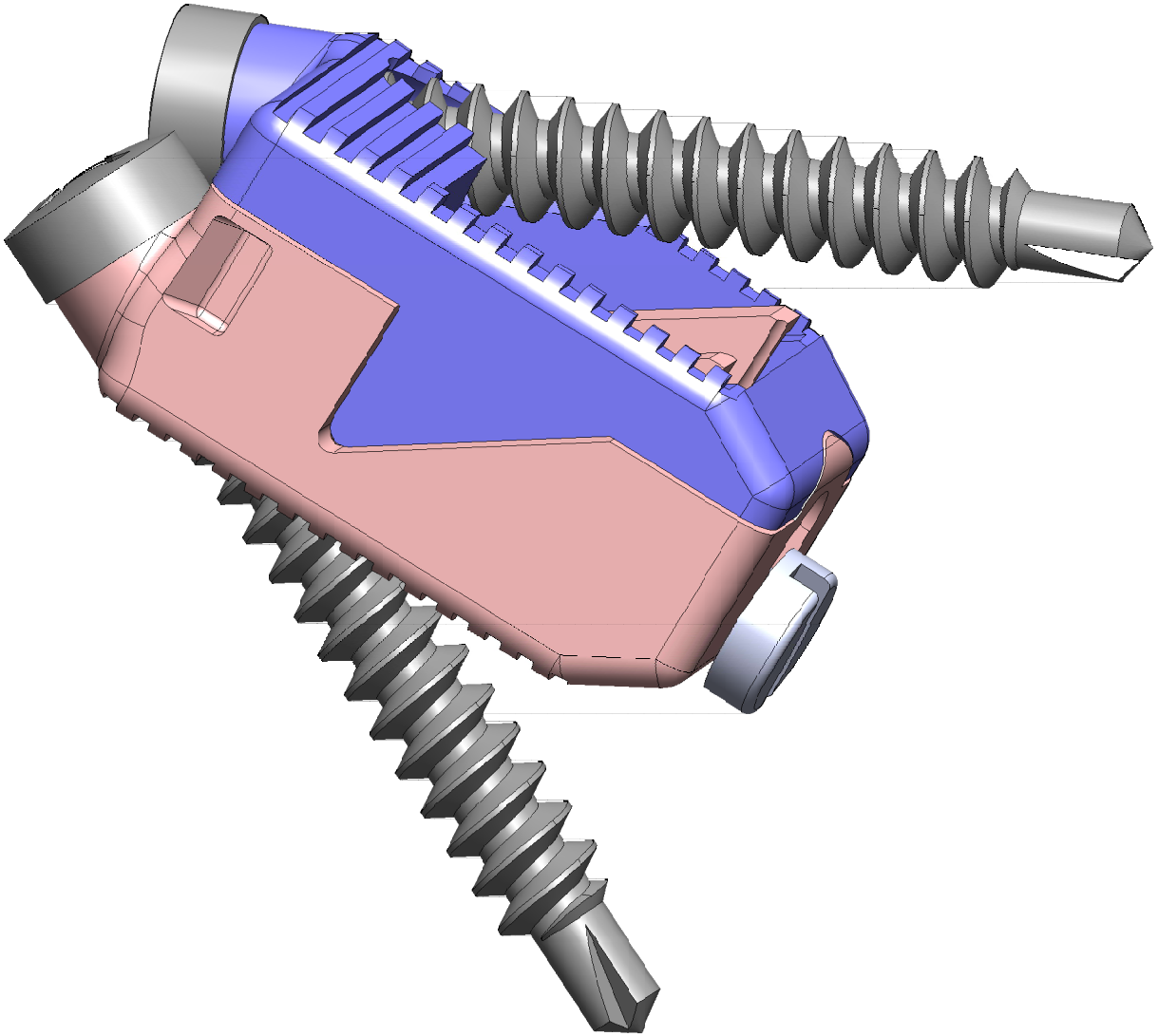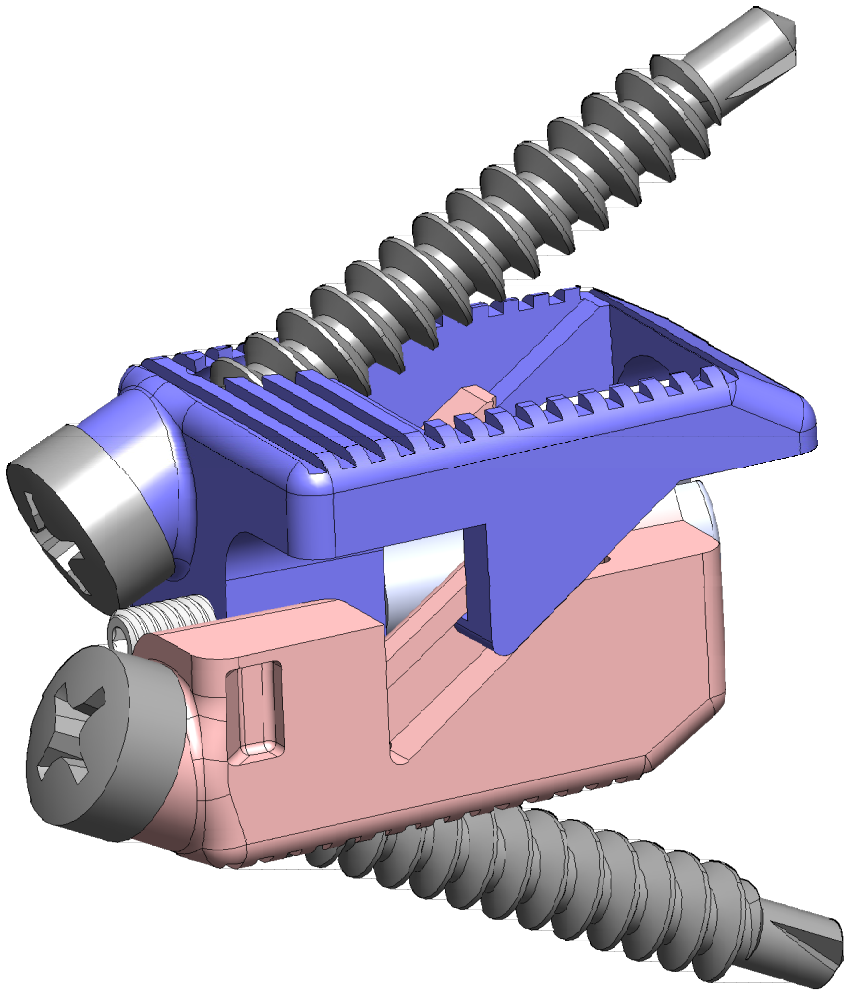
Eric
--
Eric Sugalski
Boston Device Development, Inc
office - (617) 279-0057 x703
mobile - (617) 852-6622
www.bostondevice.com