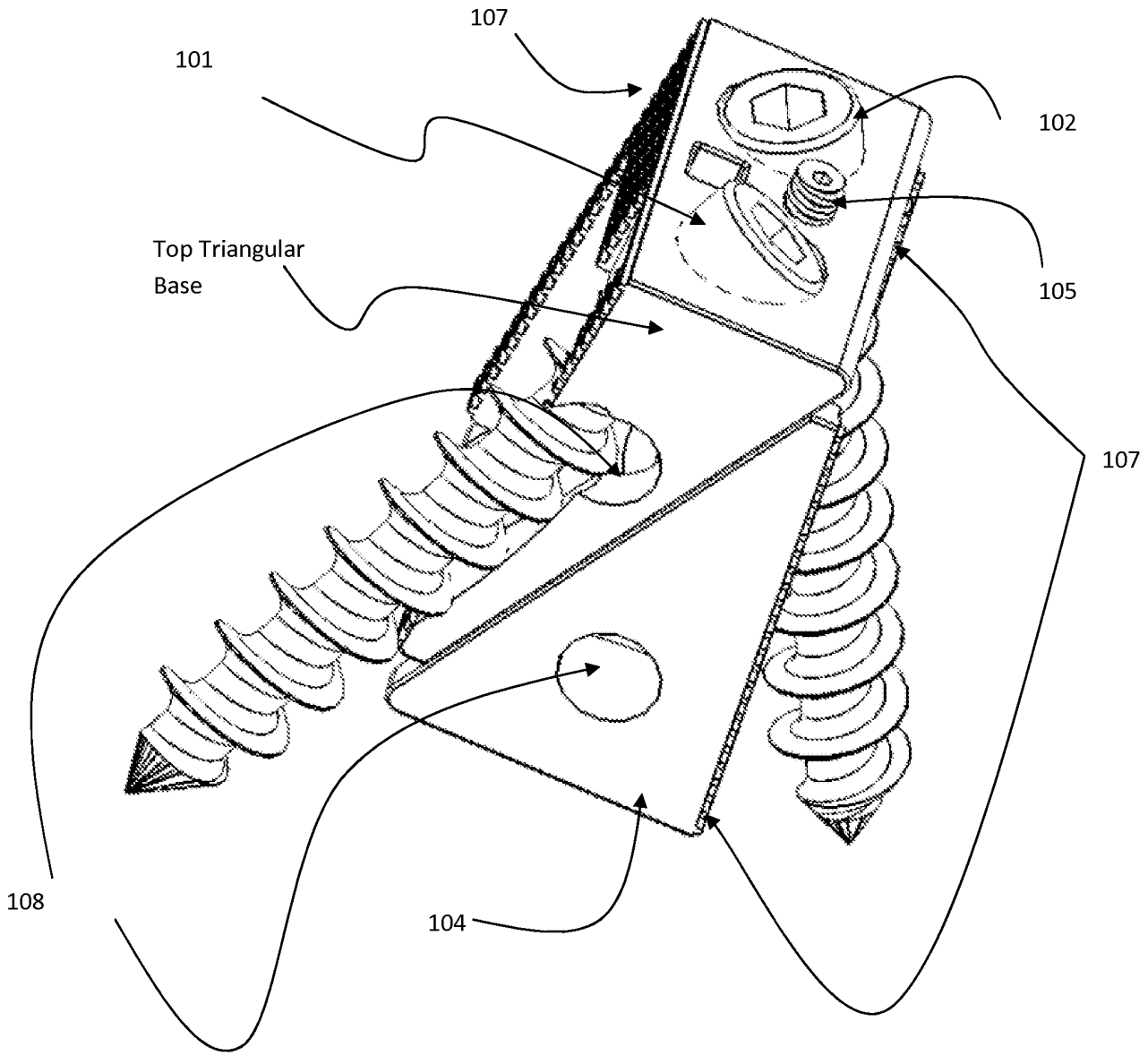

Fig. 1A

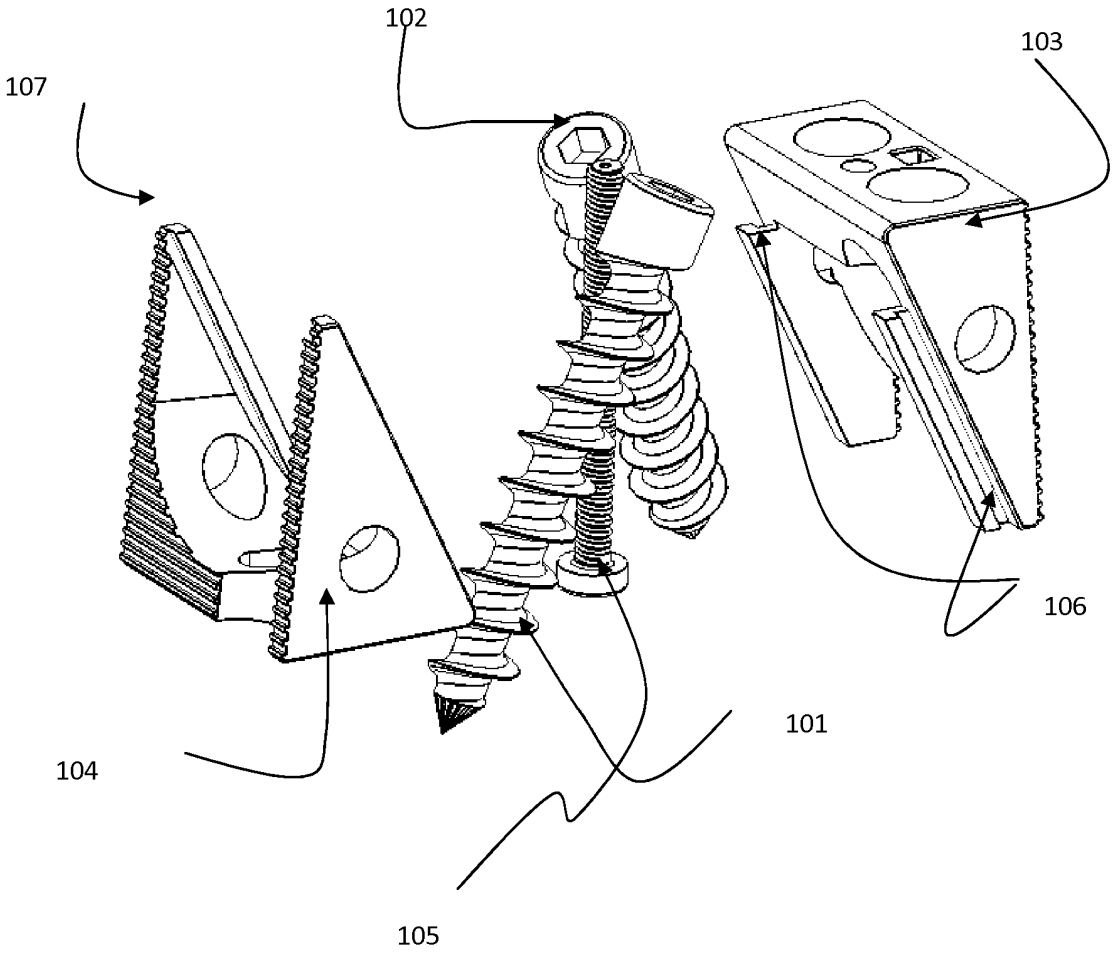

Fig. 1B

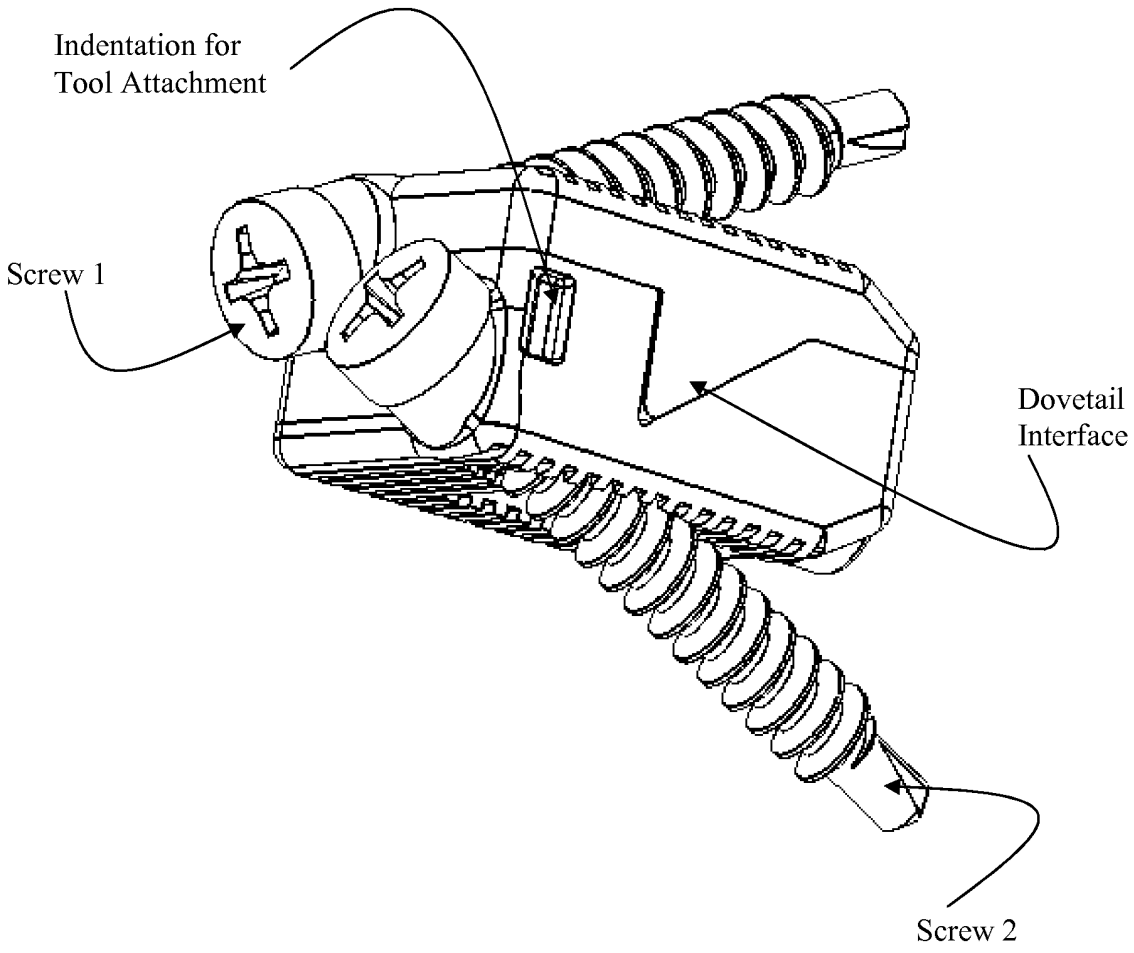
Indentation for
Tool Attachment
Screw 1
Dovetail
Interface
Screw 2

Fig. 2A

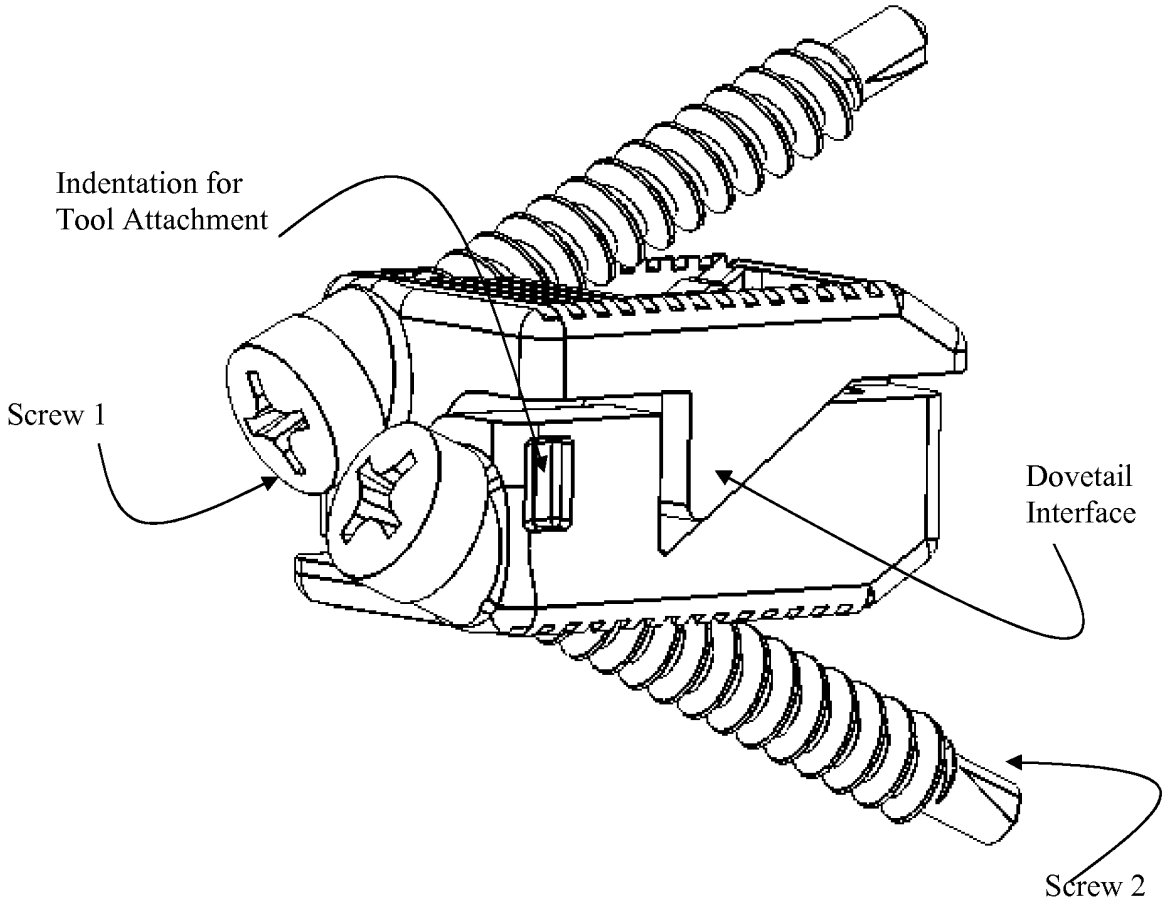
Indentation for
Tool Attachment
Screw 1
Dovetail
Interface
Screw 2

Fig. 2B

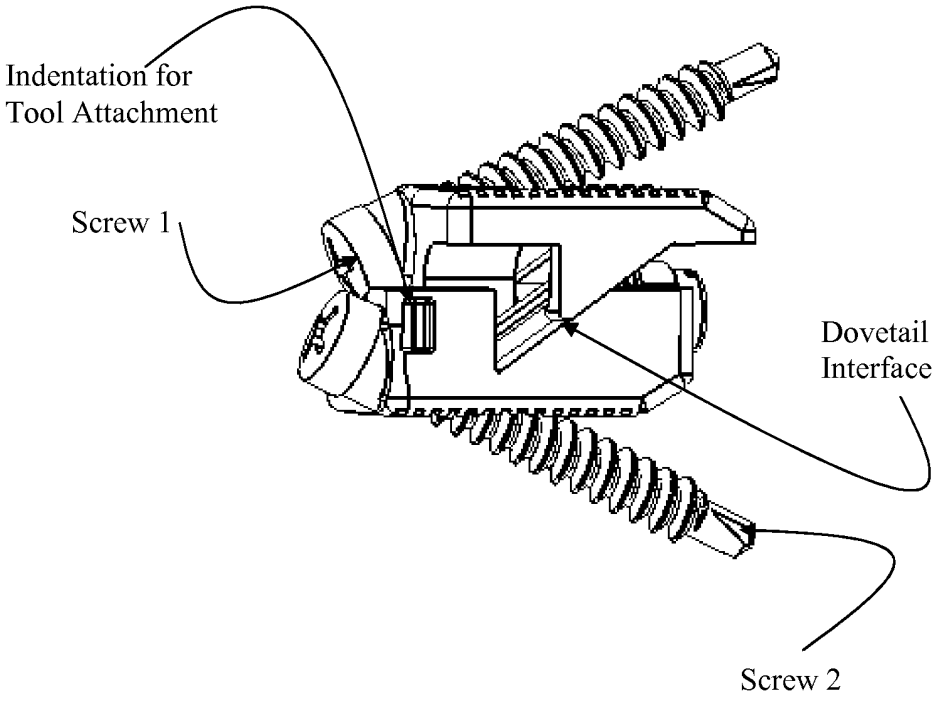
Indentation for
Tool Attachment
Screw 1
Dovetail
Interface
Screw 2

Fig. 2C

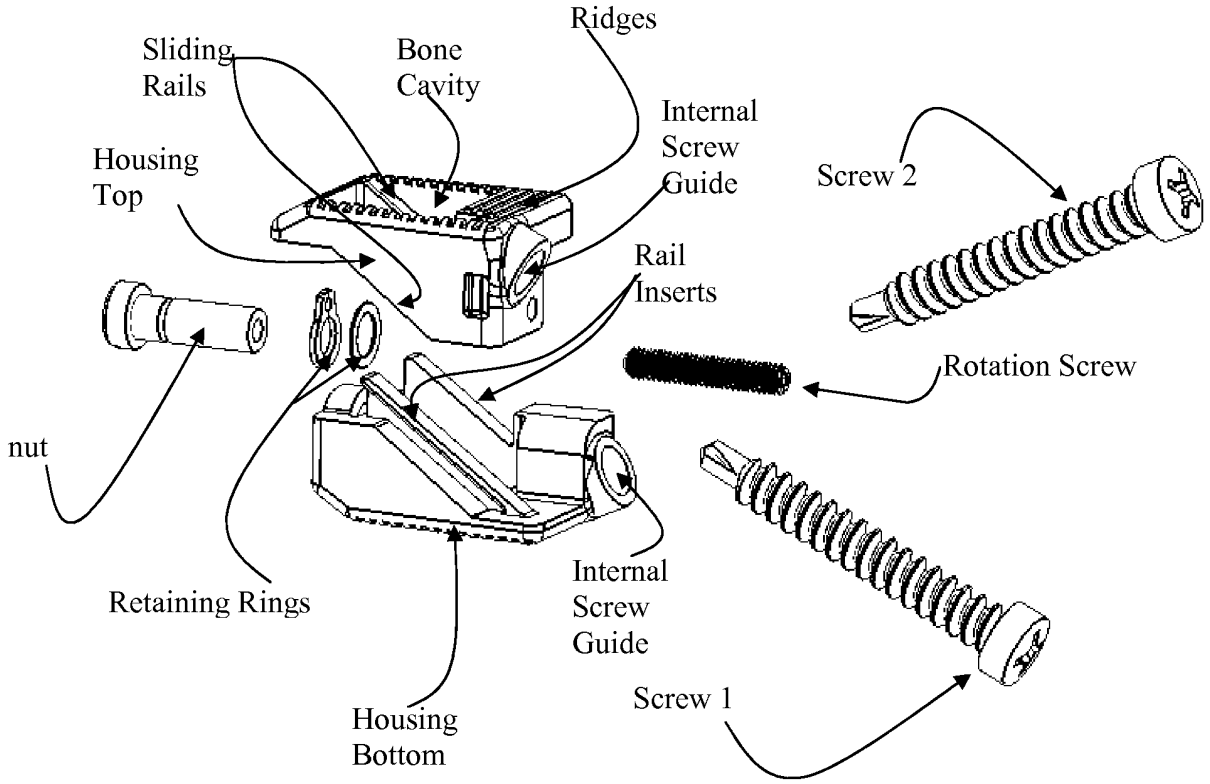
Ridges
Sliding Rails
Bone Cavity
Internal Screw Guide
Housing Top
Screw 2
Rail Inserts
Rotation Screw
nut
Retaining Rings
Internal Screw Guide
Screw 1
Housing Bottom

Fig. 2D

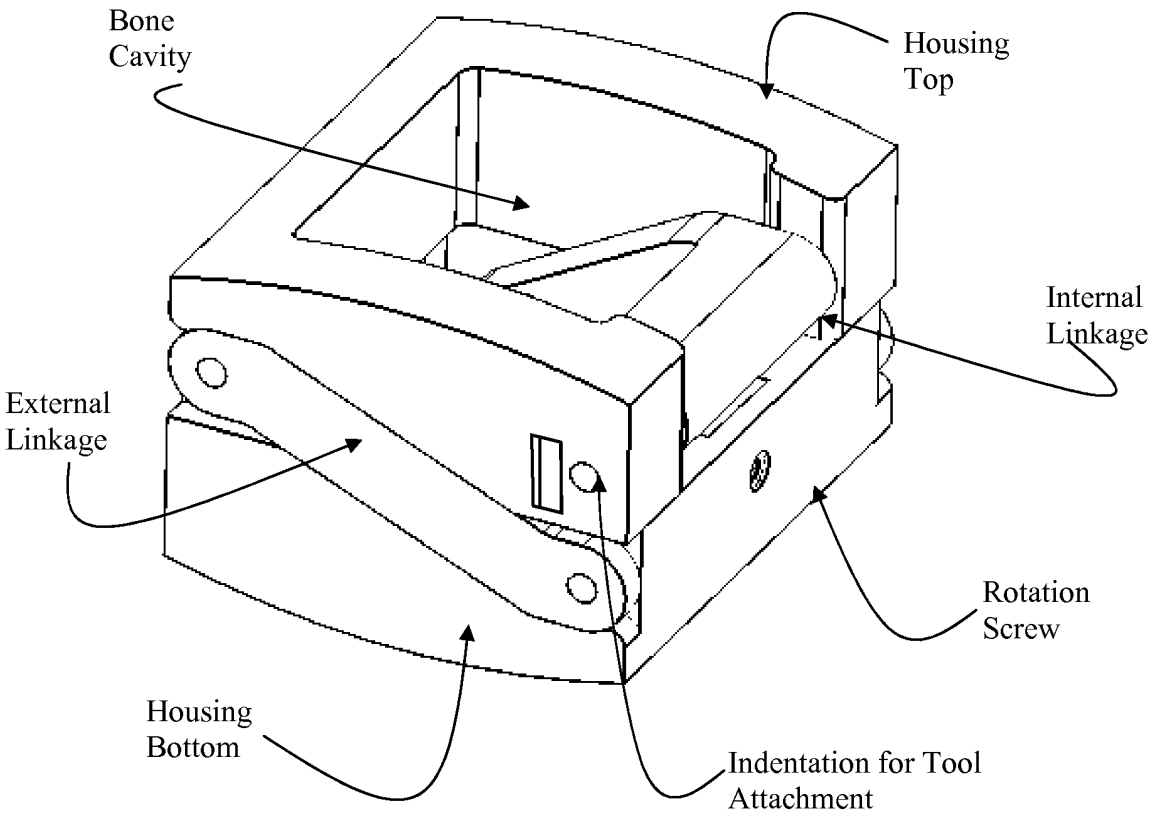
Bone
Cavity
Housing
Top
Internal
Linkage
External
Linkage
Rotation
Screw
Housing
Bottom
Indentation for Tool
Attachment

Fig. 3A

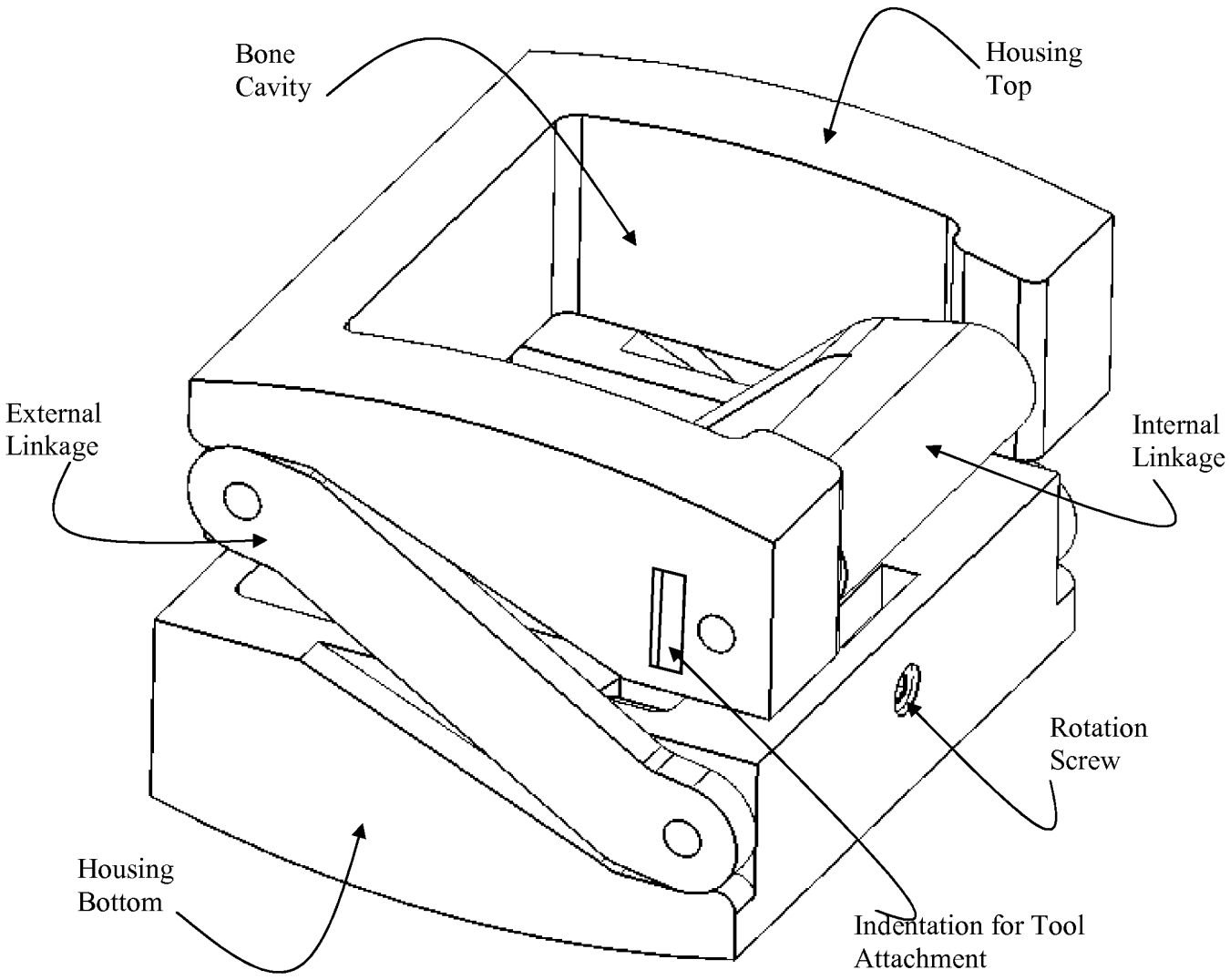
Bone
Cavity
Housing
Top
External
Linkage
Internal
Linkage
Rotation
Screw
Housing
Bottom
Indentation for Tool
Attachment

Fig. 3B

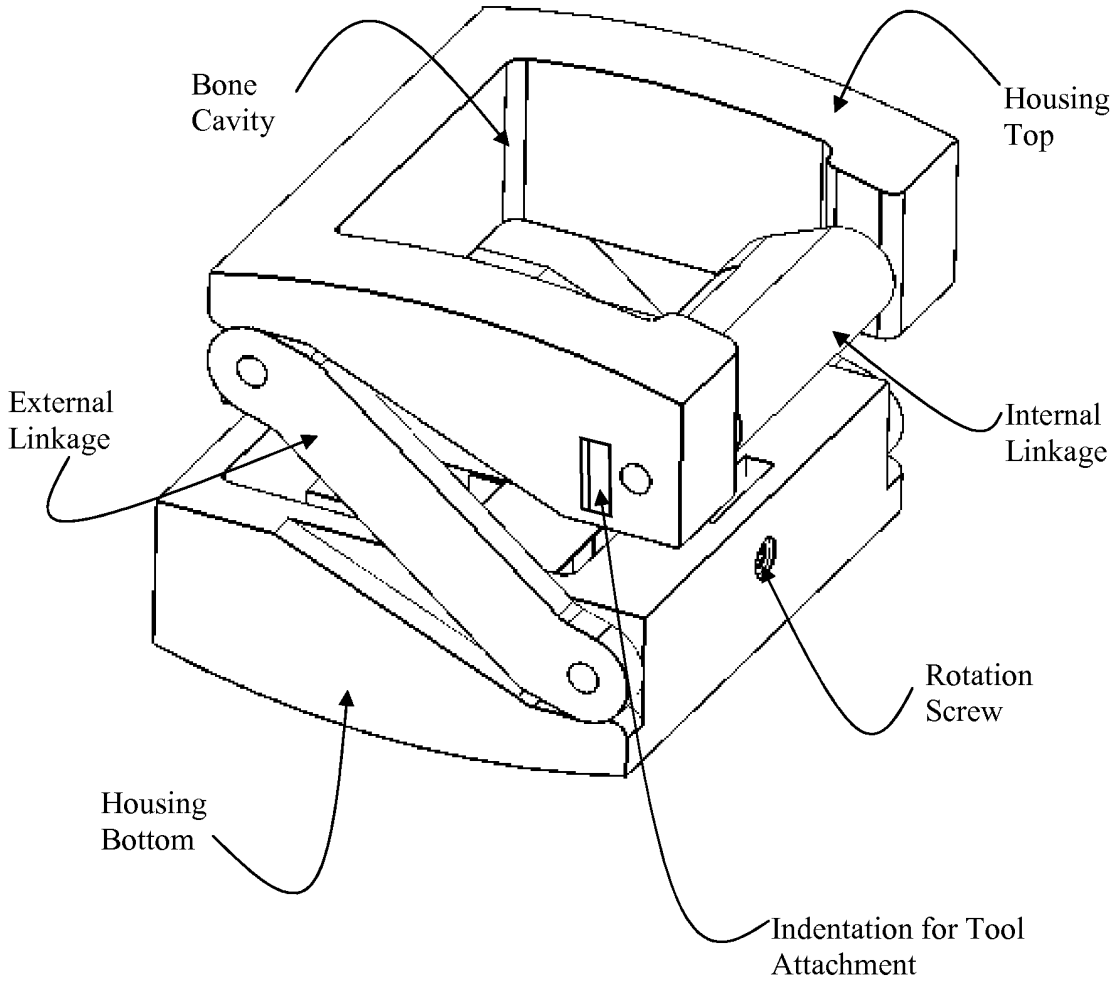
Bone
Cavity
Housing
Top
External
Linkage
Internal
Linkage
Rotation
Screw
Housing
Bottom
Indentation for Tool
Attachment

Fig. 3C

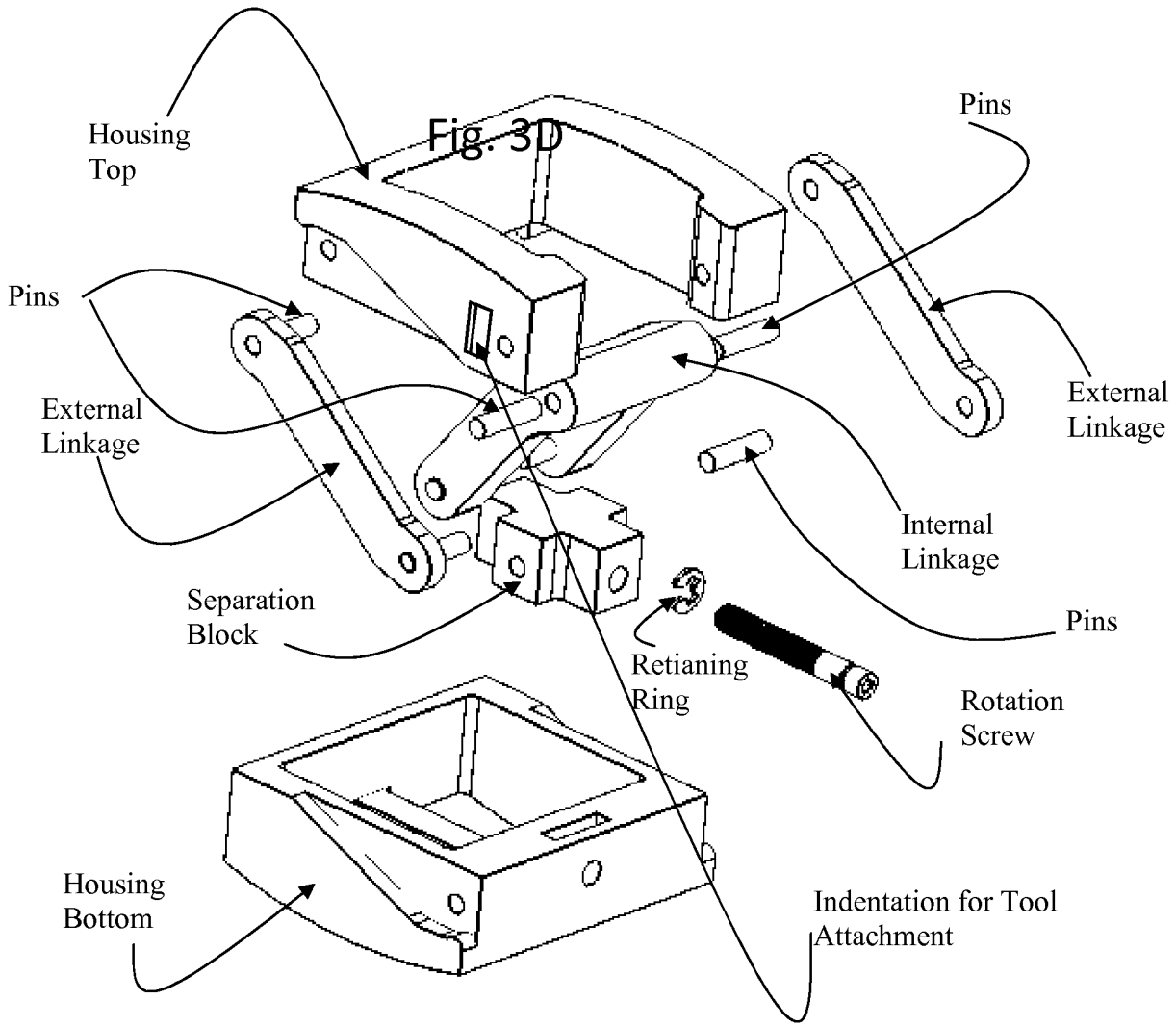
Fig. 3D
Housing Top
Pins
Pins
External Linkage
External Linkage
Internal Linkage
Separation Block
Pins
Retianing Ring
Rotation Screw
Housing Bottom
Indentation for Tool Attachment

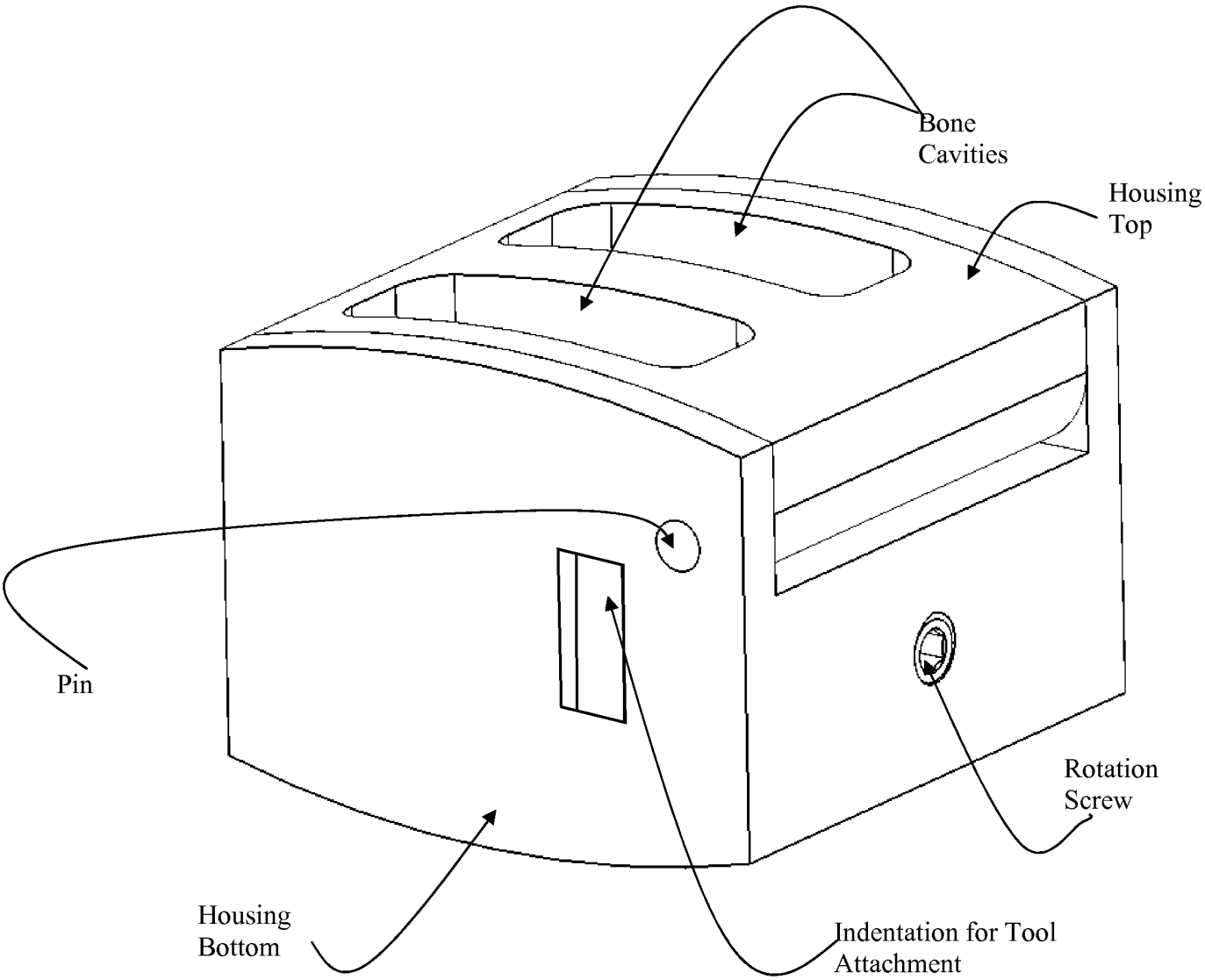
Bone
Cavities
Housing
Top
Pin
Rotation
Screw
Housing
Bottom
Indentation for Tool
Attachment

Fig. 4A

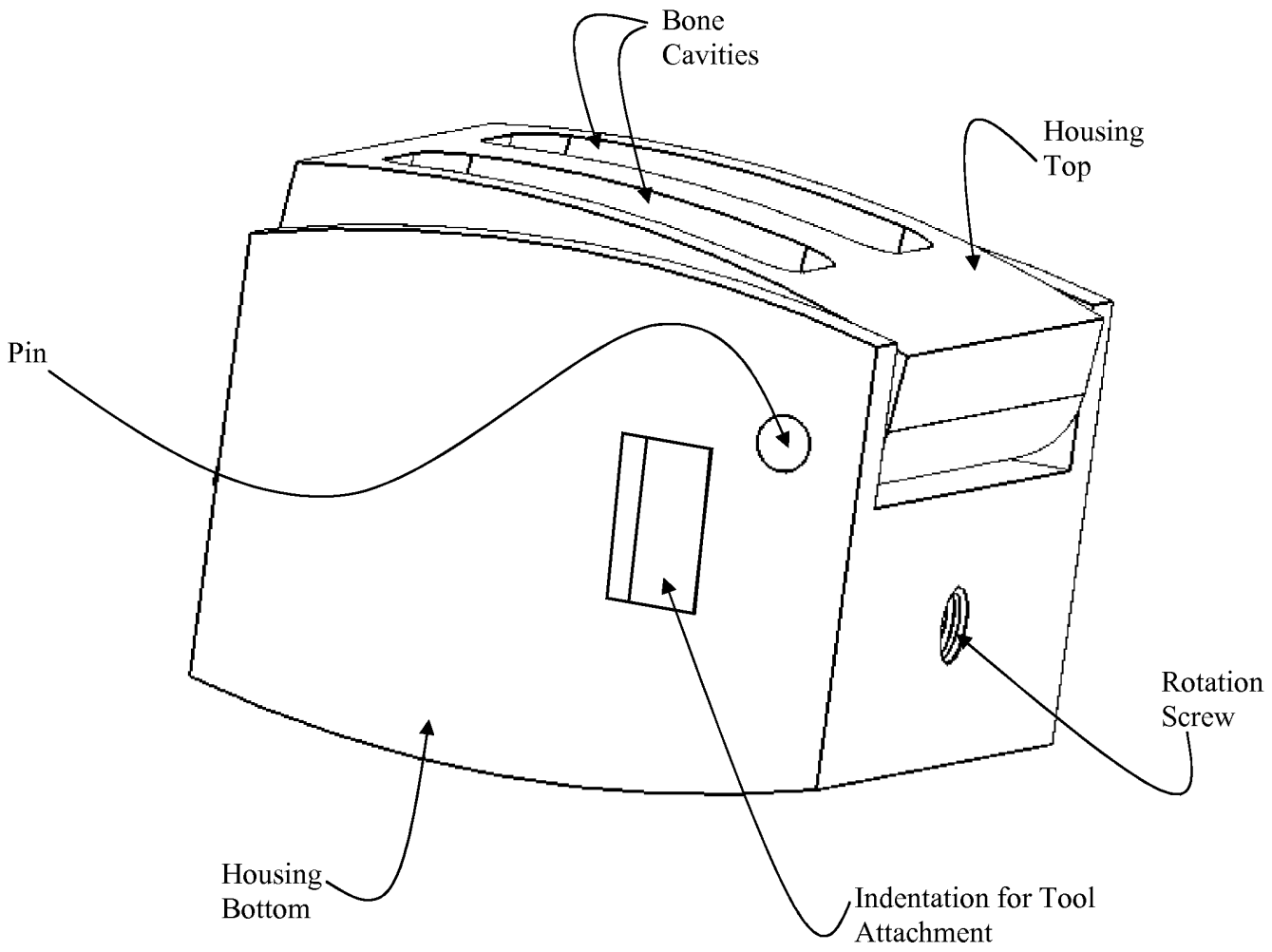
Bone
Cavities
Housing
Top
Pin
Rotation
Screw
Housing
Bottom
Indentation for Tool
Attachment

Fig. 4B

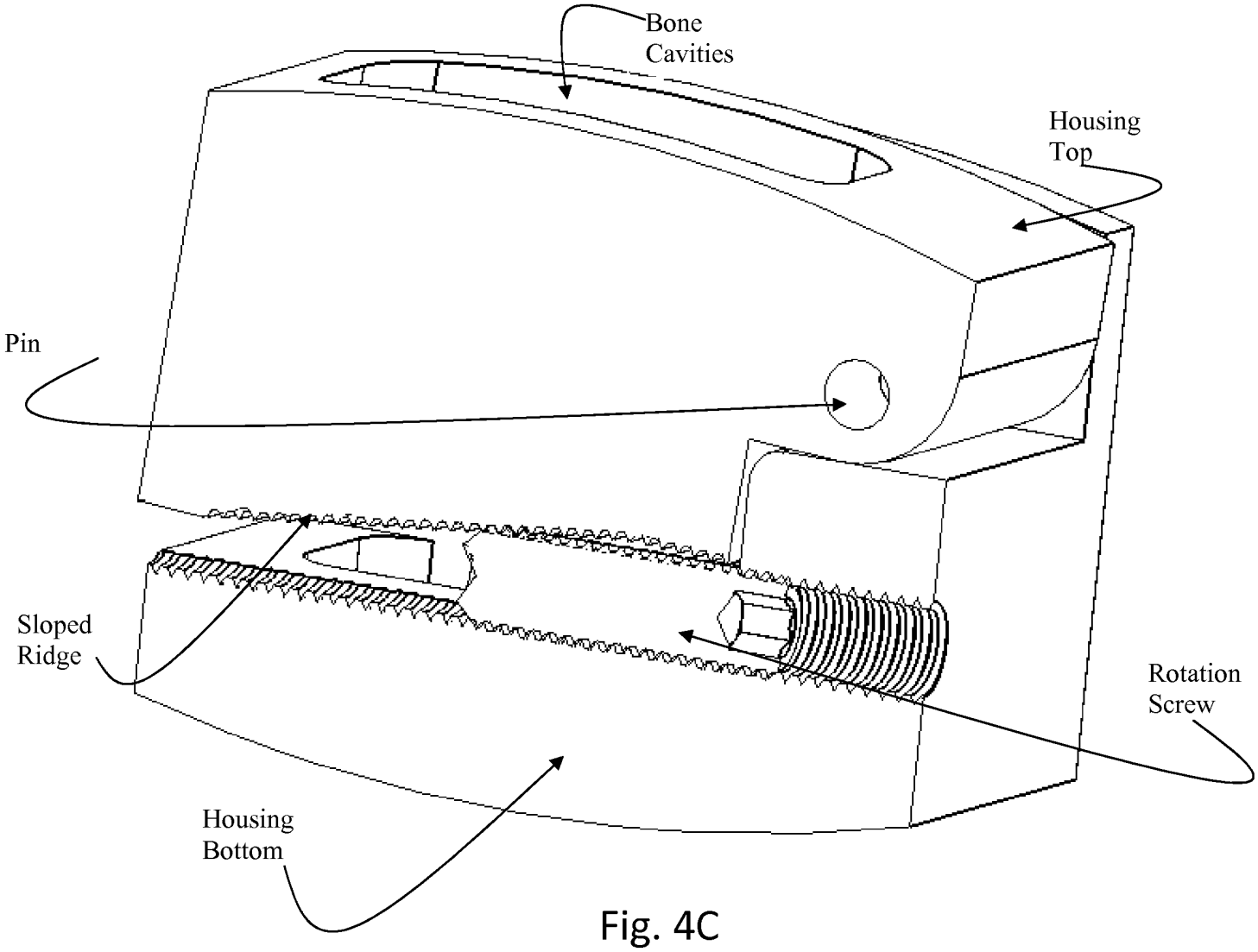
Bone
Cavities
Housing
Top
Pin
Sloped
Ridge
Rotation
Screw
Housing
Bottom

Fig. 4C

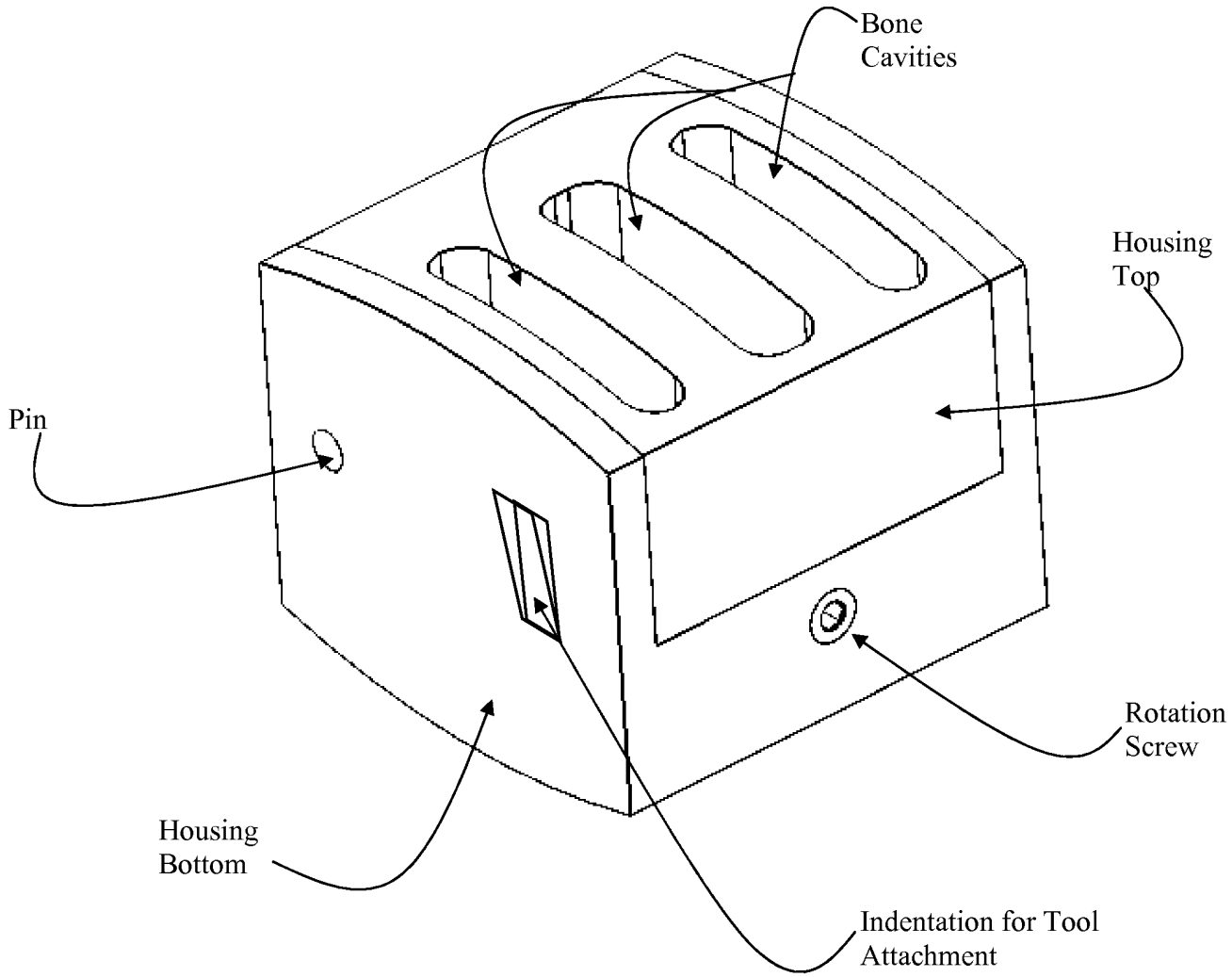
Bone
Cavities
Housing
Top
Pin
Rotation
Screw
Housing
Bottom
Indentation for Tool
Attachment

Fig. 5A

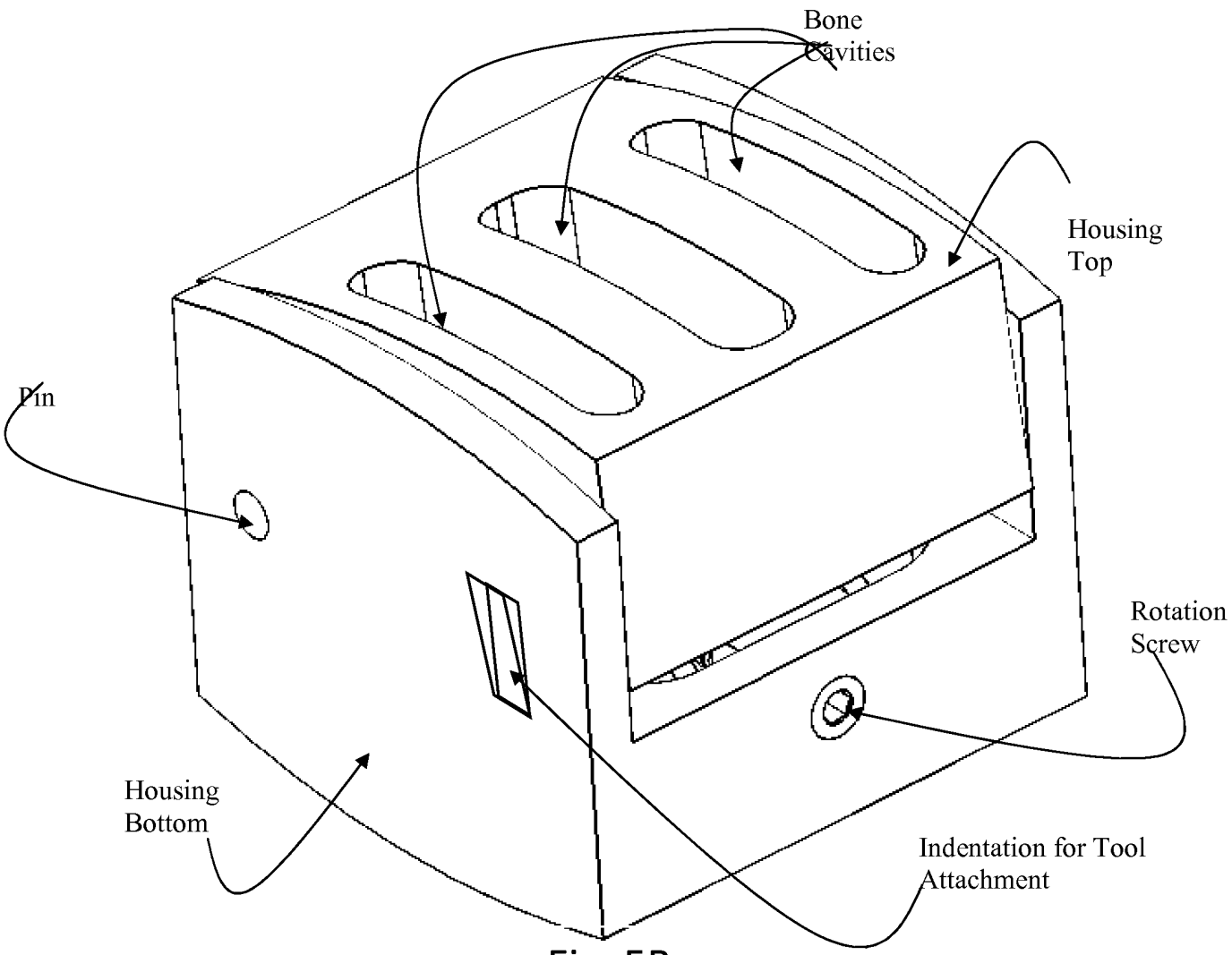
Bone
Cavities
Housing
Top
Pin
Rotation
Screw
Housing
Bottom
Indentation for Tool
Attachment

Fig. 5B

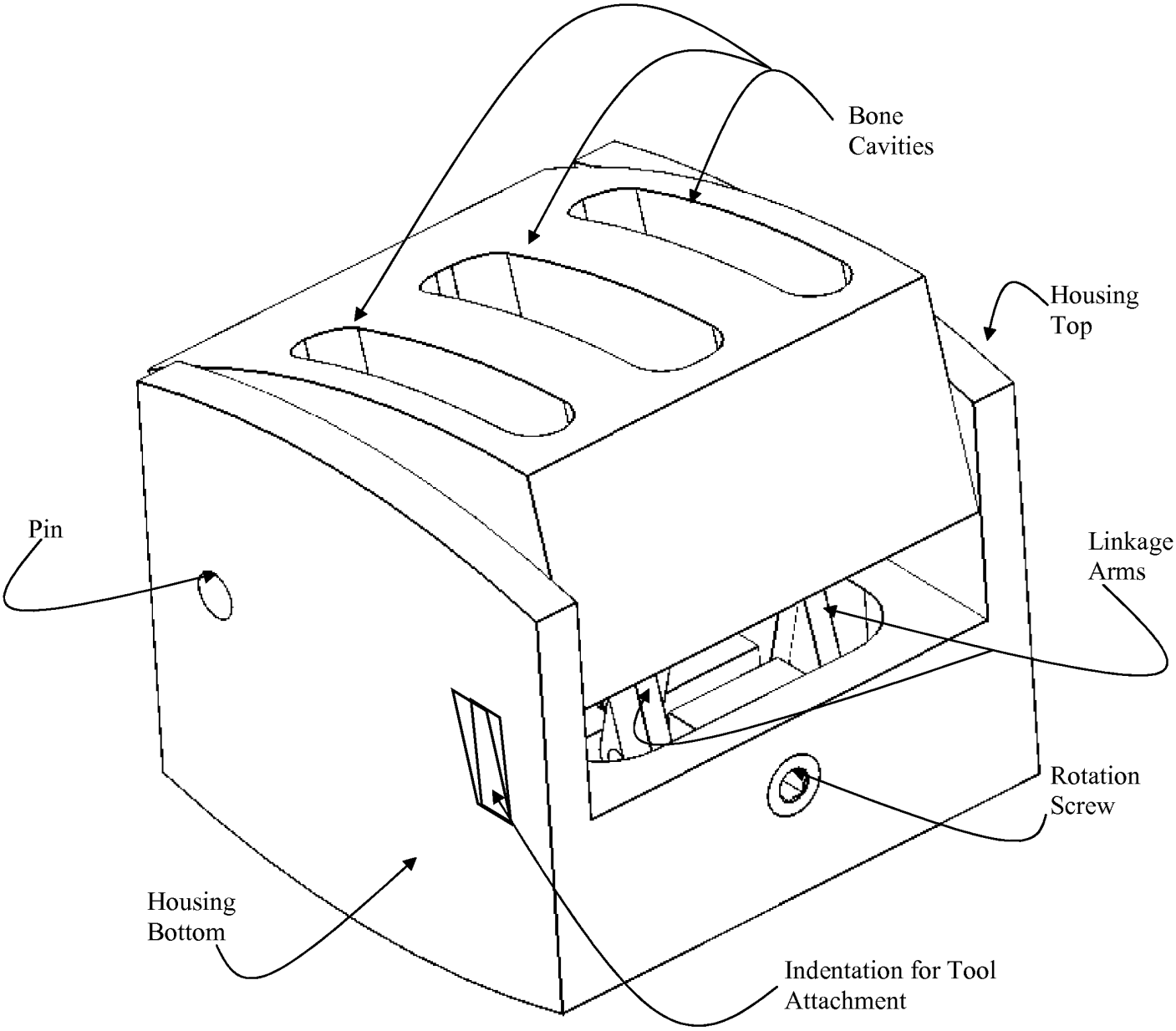
Bone
Cavities
Housing
Top
Pin
Linkage
Arms
Rotation
Screw
Housing
Bottom
Indentation for Tool
Attachment

Fig. 5C

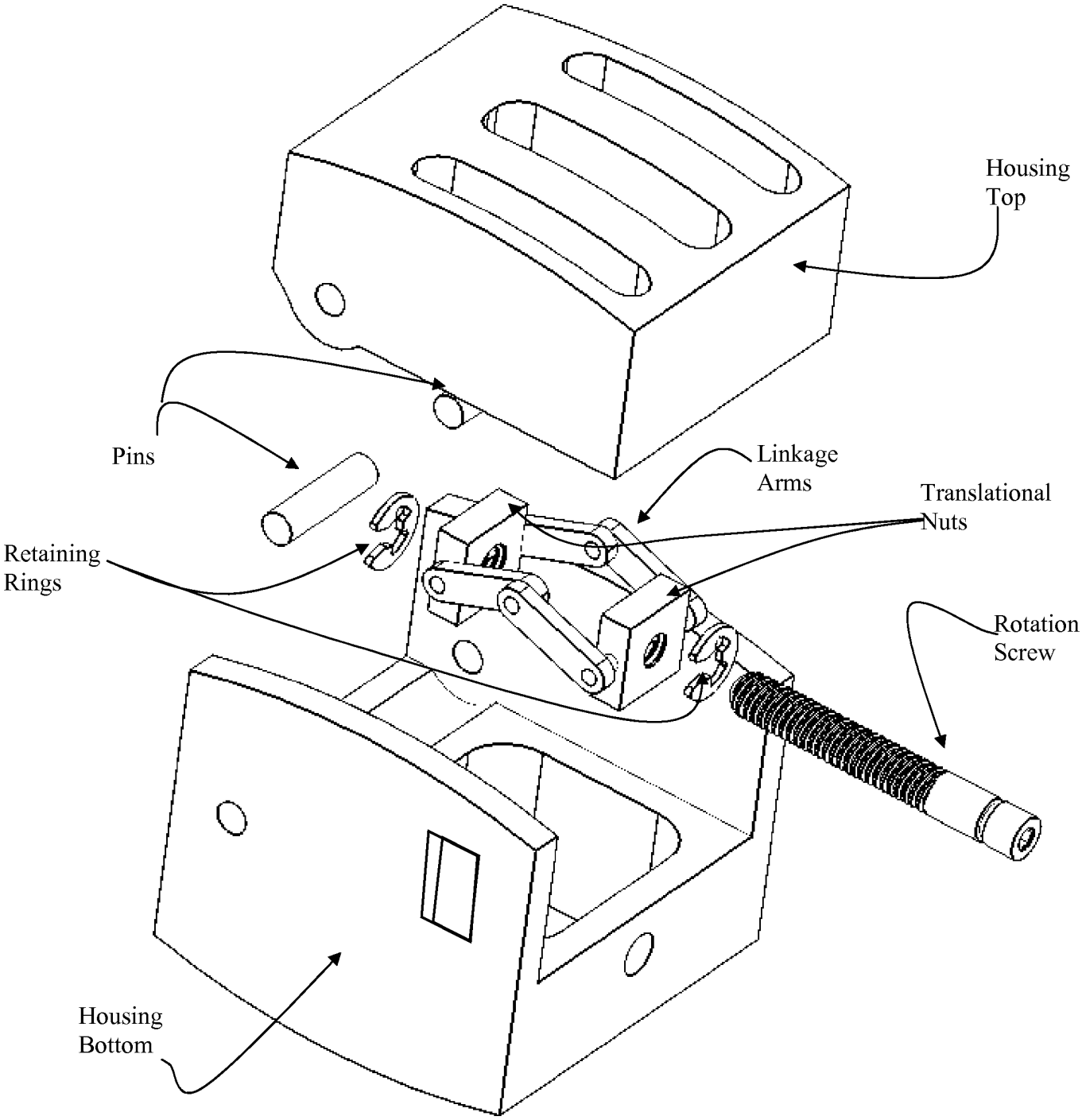
Housing
Top
Pins
Linkage
Arms
Translational
Nuts
Retaining
Rings
Rotation
Screw
Housing
Bottom

Fig. 5D

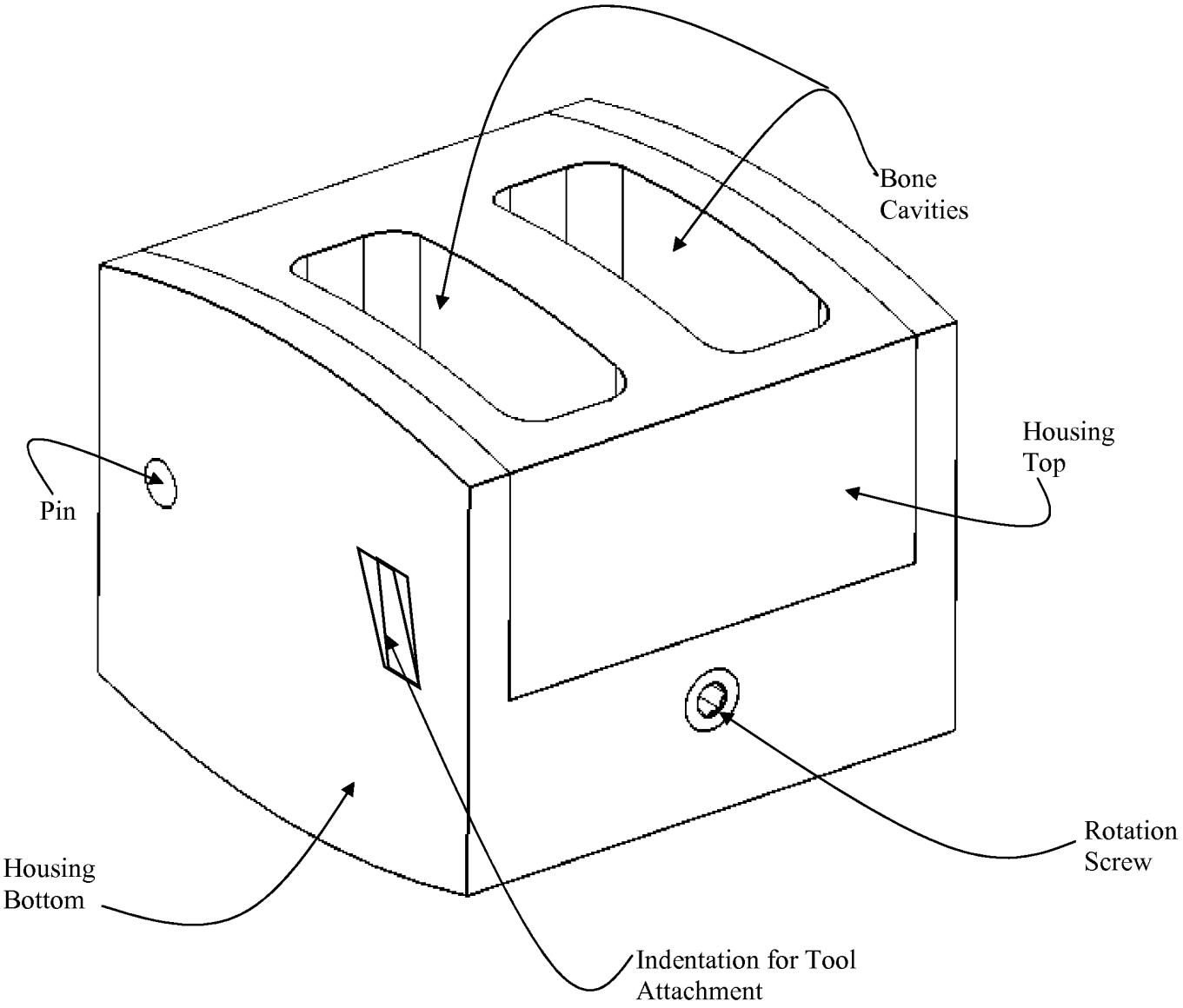
Bone
Cavities
Housing
Top
Pin
Rotation
Screw
Housing
Bottom
Indentation for Tool
Attachment

Fig. 6A

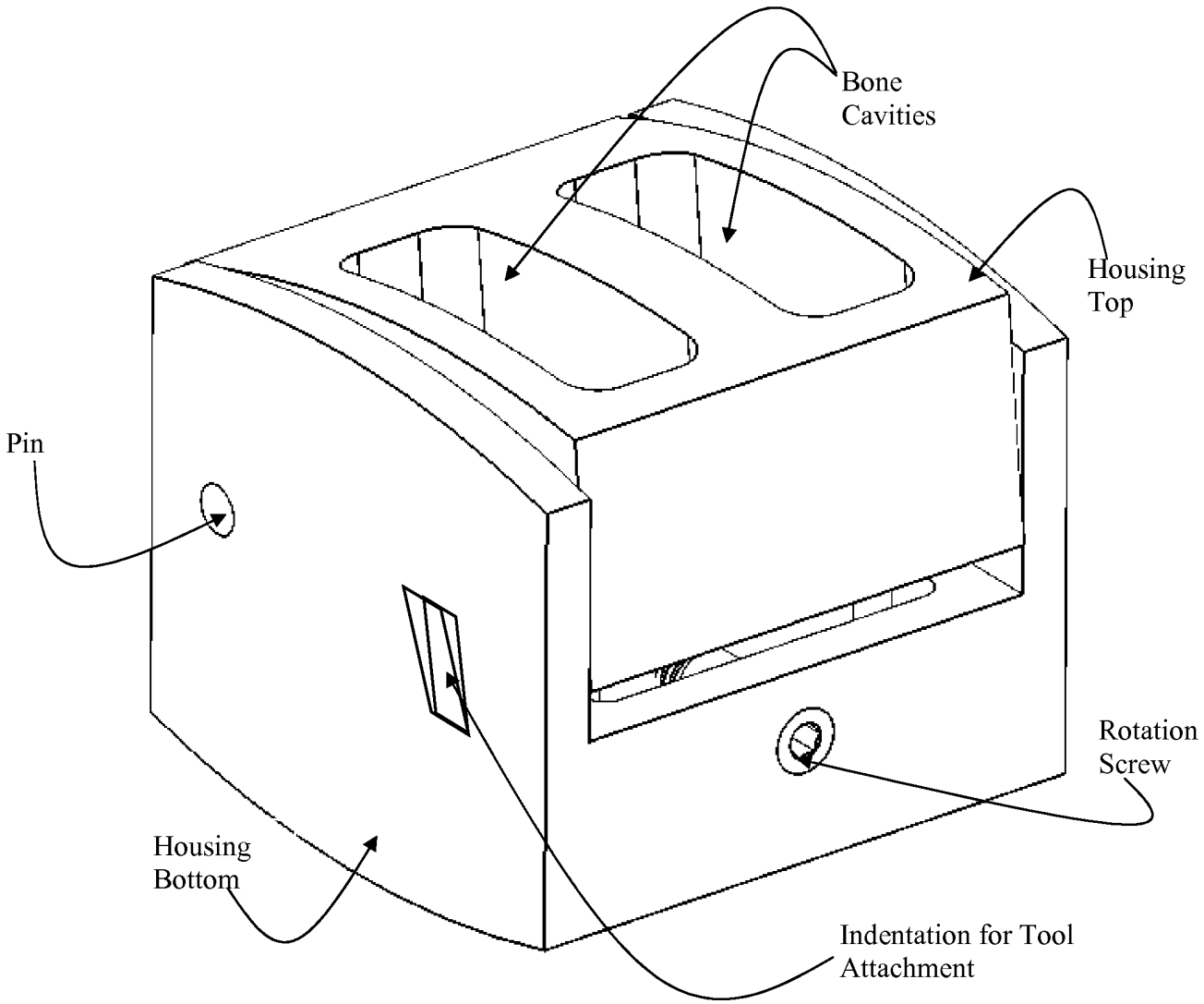
Bone
Cavities
Housing
Top
Pin
Rotation
Screw
Housing
Bottom
Indentation for Tool
Attachment

Fig. 6B

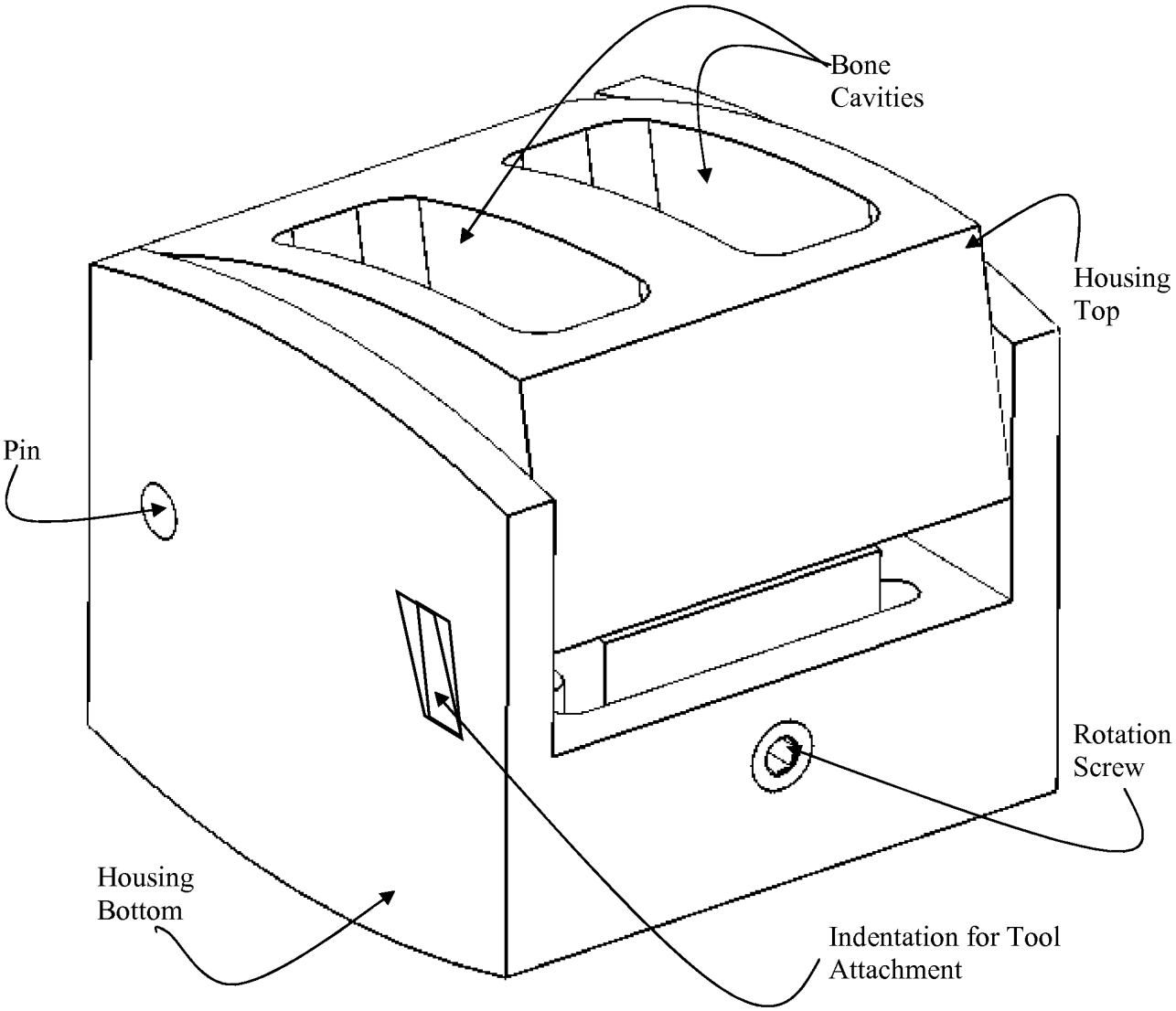
Bone
Cavities
Housing
Top
Pin
Rotation
Screw
Housing
Bottom
Indentation for Tool
Attachment

Fig. 6C

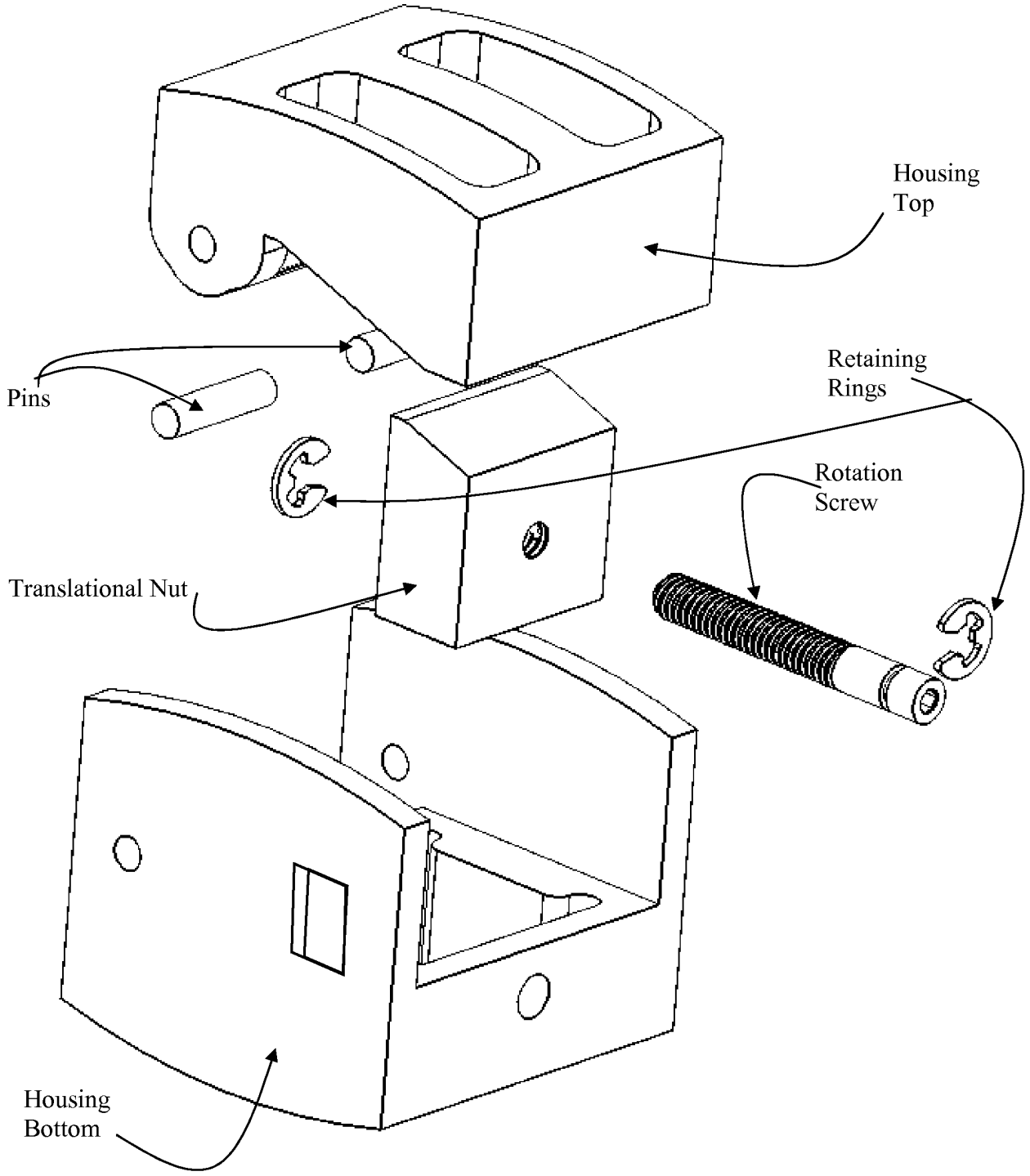
Housing
Top
Pins
Retaining
Rings
Rotation
Screw
Translational Nut
Housing
Bottom

Fig. 6D

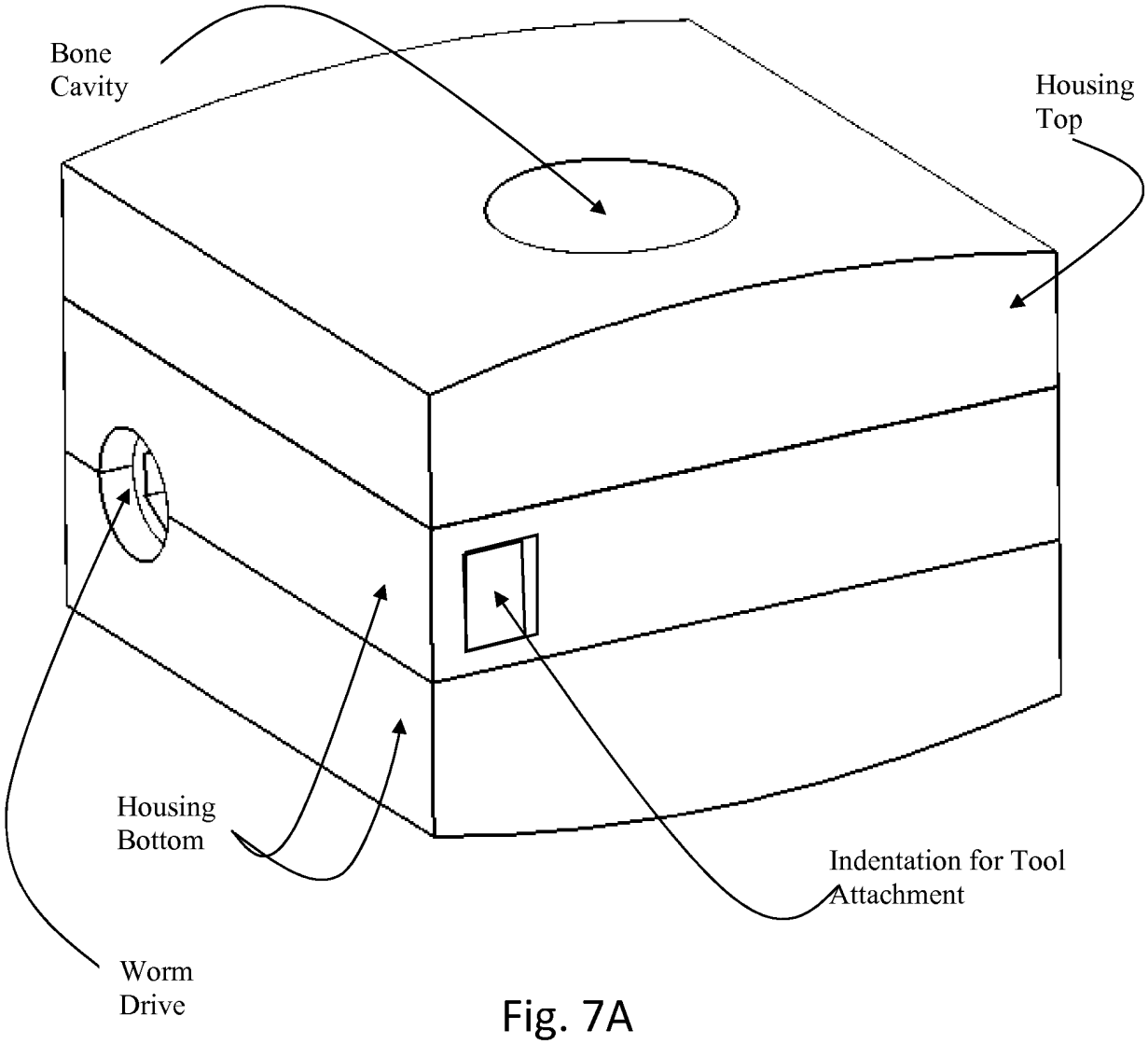
Bone
Cavity
Housing
Top
Housing
Bottom
Indentation for Tool
Attachment
Worm
Drive

Fig. 7A

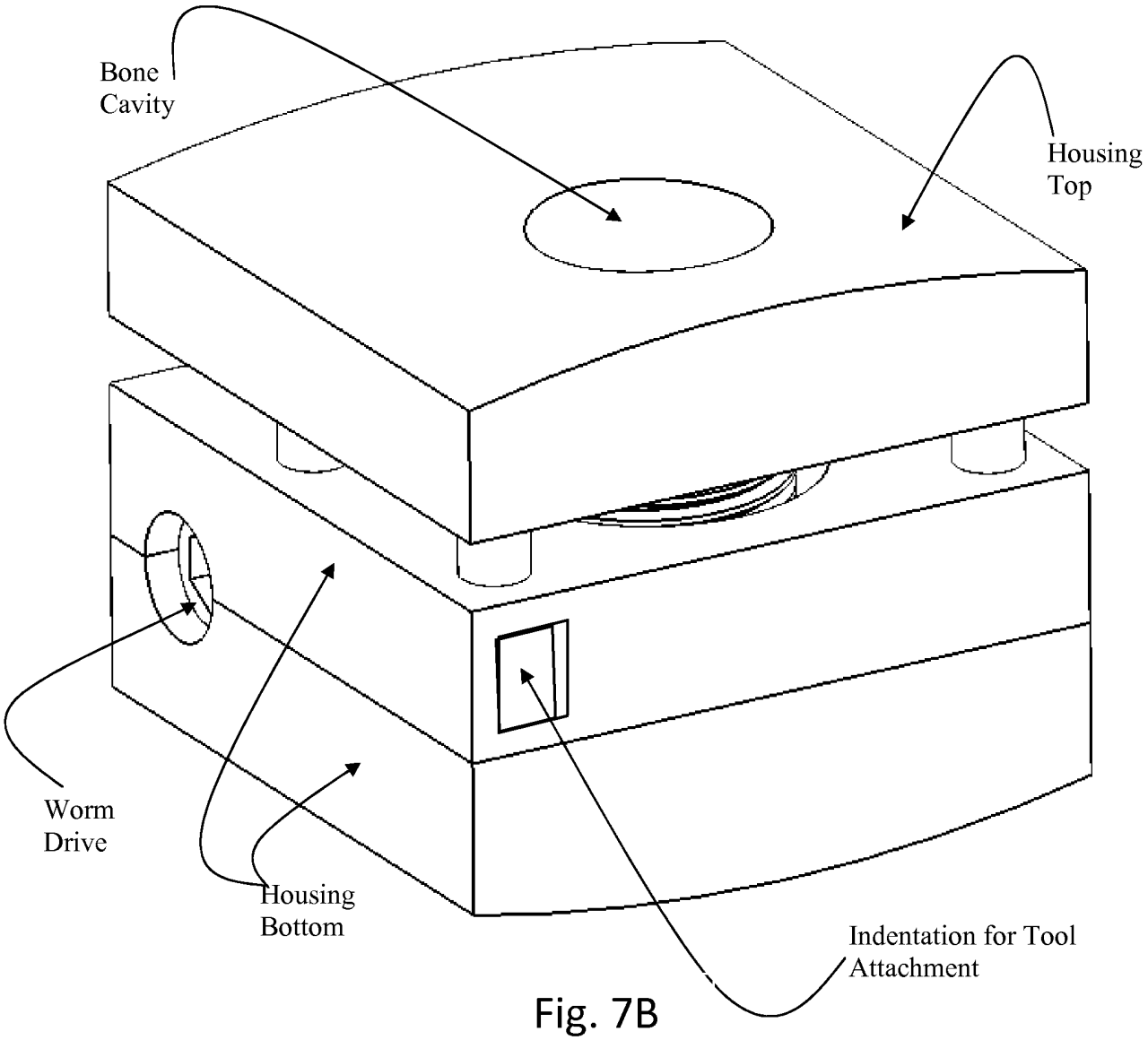
Bone
Cavity
Housing
Top
Worm
Drive
Housing
Bottom
Indentation for Tool
Attachment

Fig. 7B

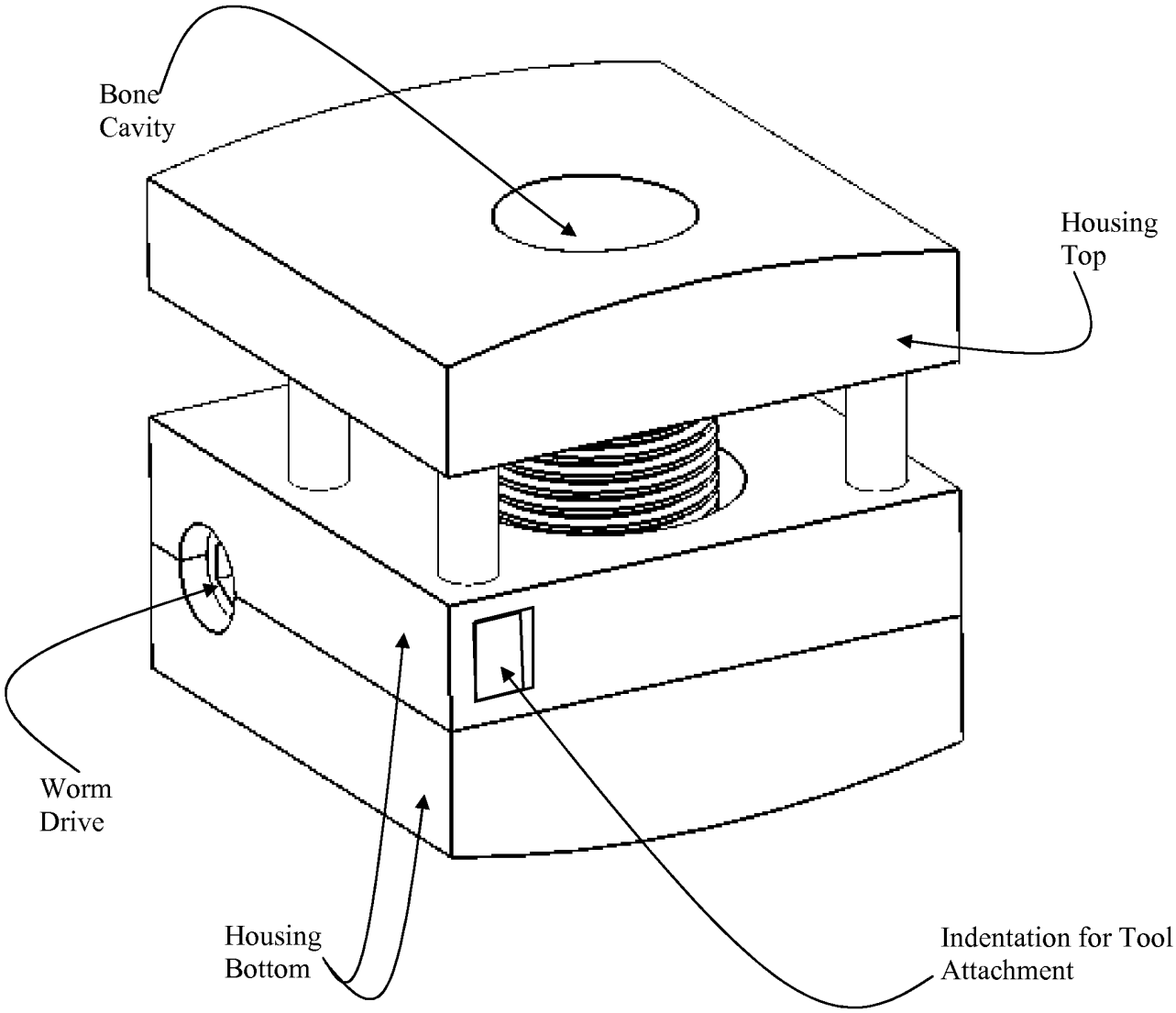
Bone
Cavity
Housing
Top
Worm
Drive
Housing
Bottom
Indentation for Tool
Attachment

Fig. 7C

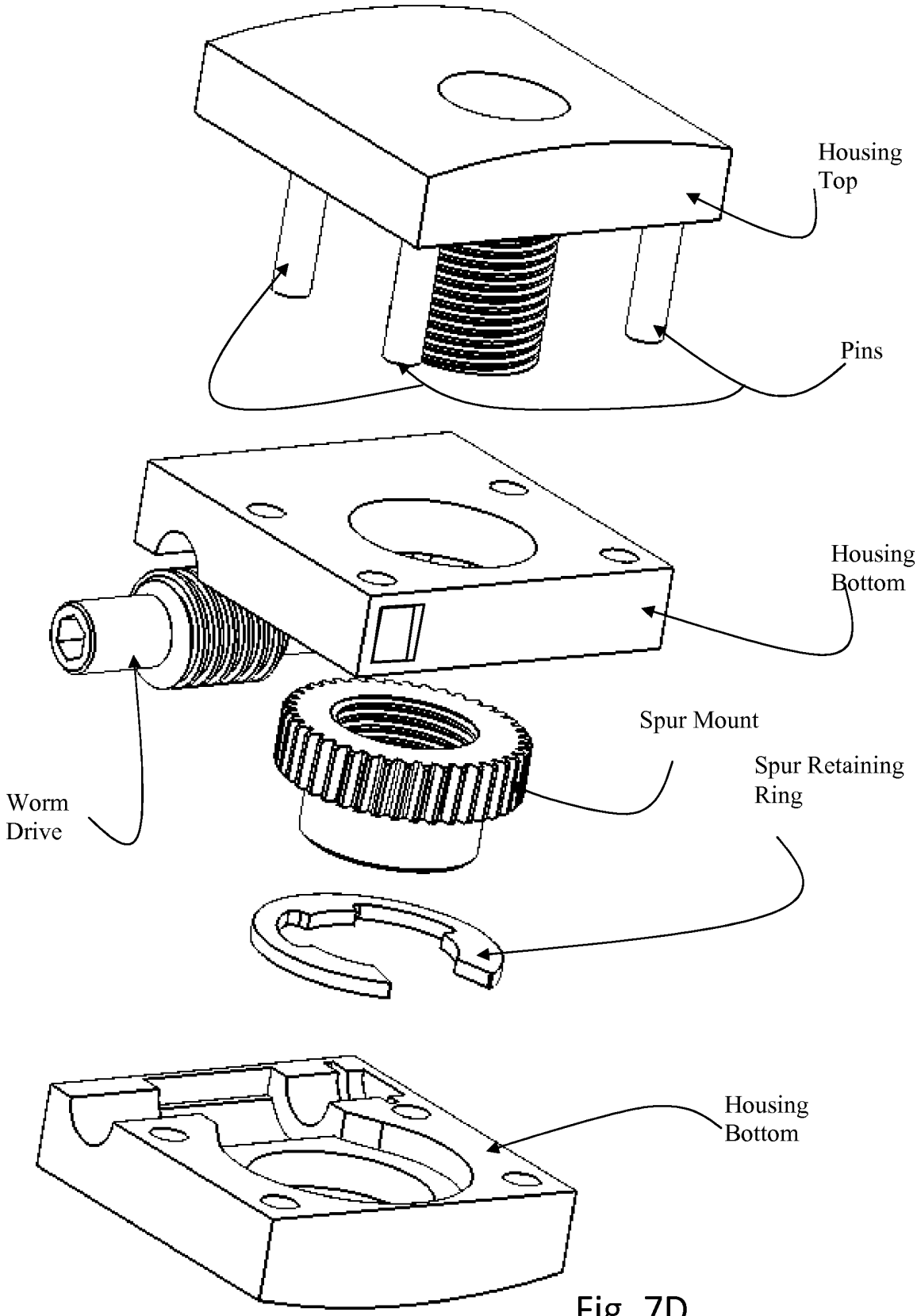
Housing
Top
Pins
Housing
Bottom
Spur Mount
Spur Retaining
Ring
Worm
Drive
Housing
Bottom

Fig. 7D

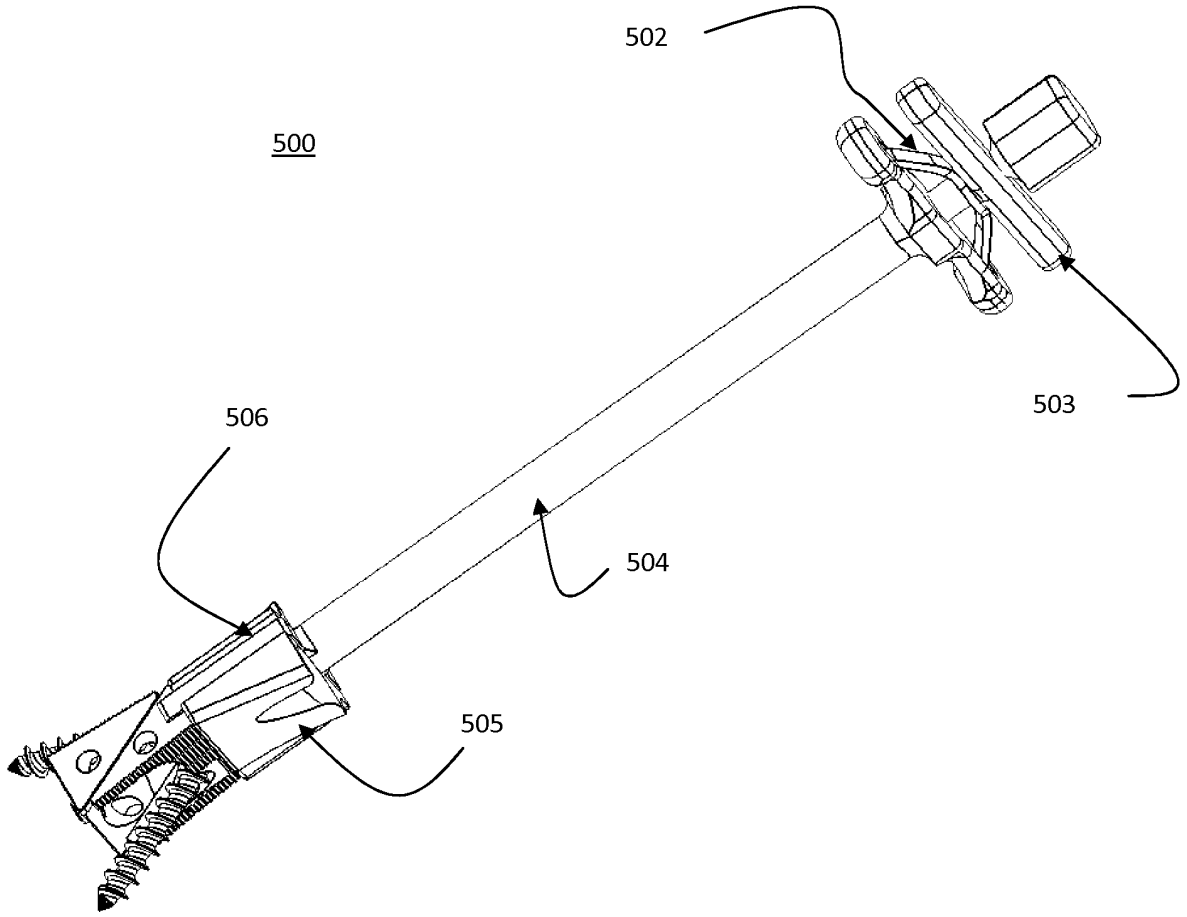

Fig. 8A

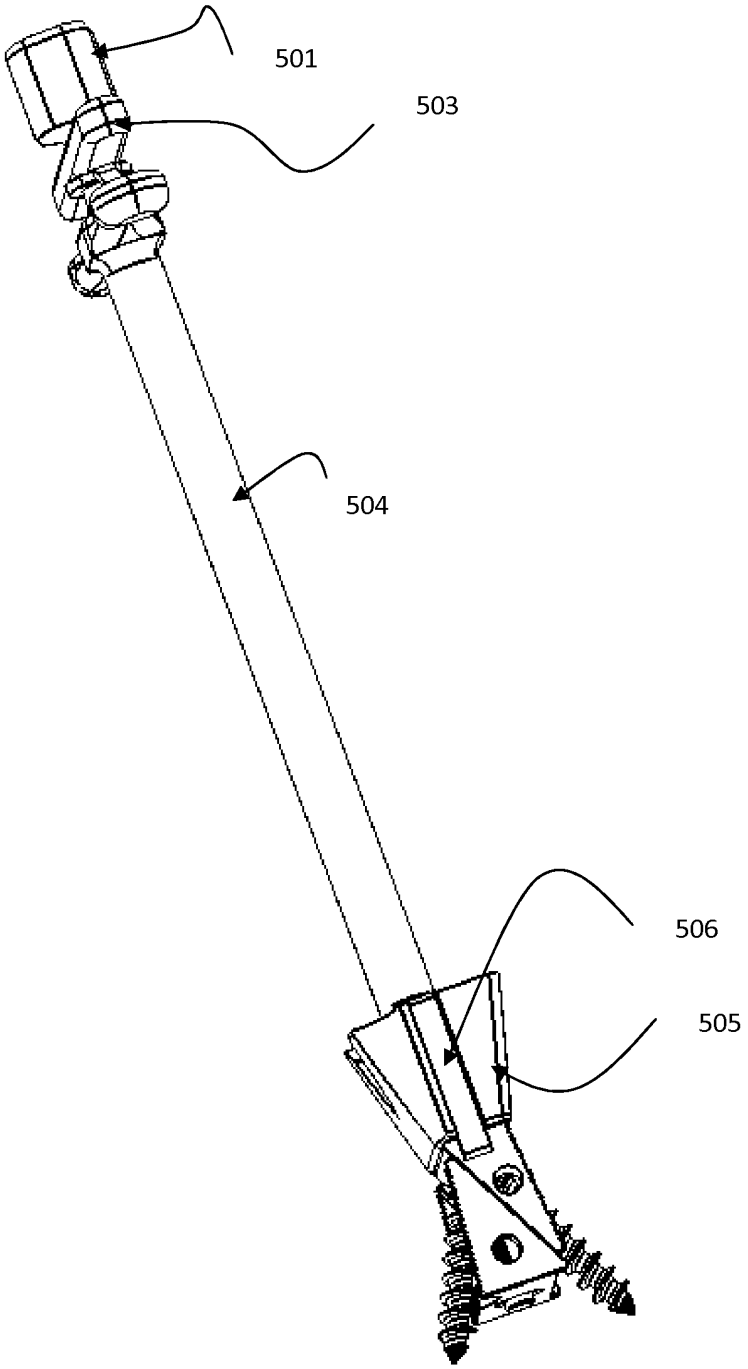

Fig. 8B

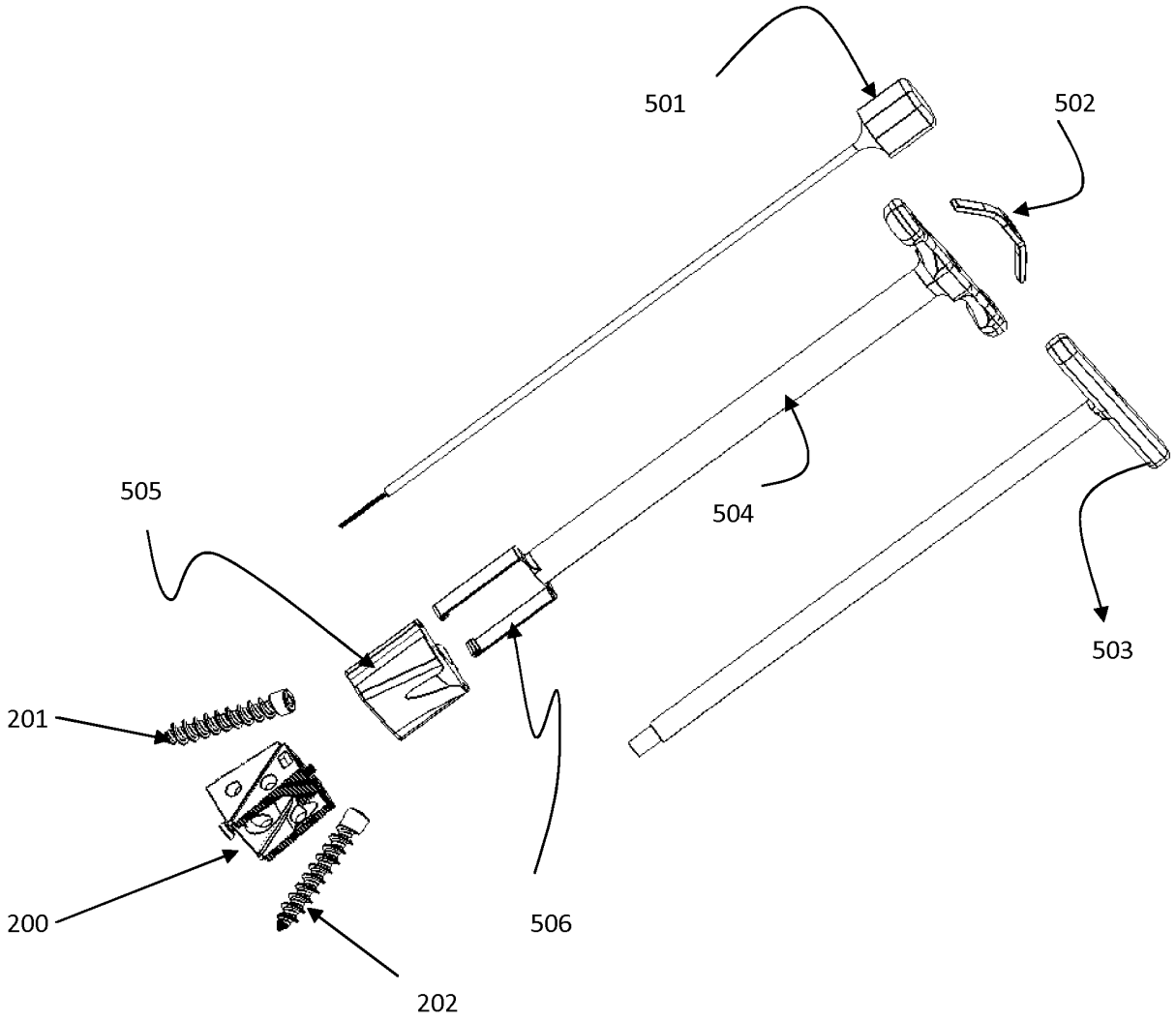

Fig. 8C

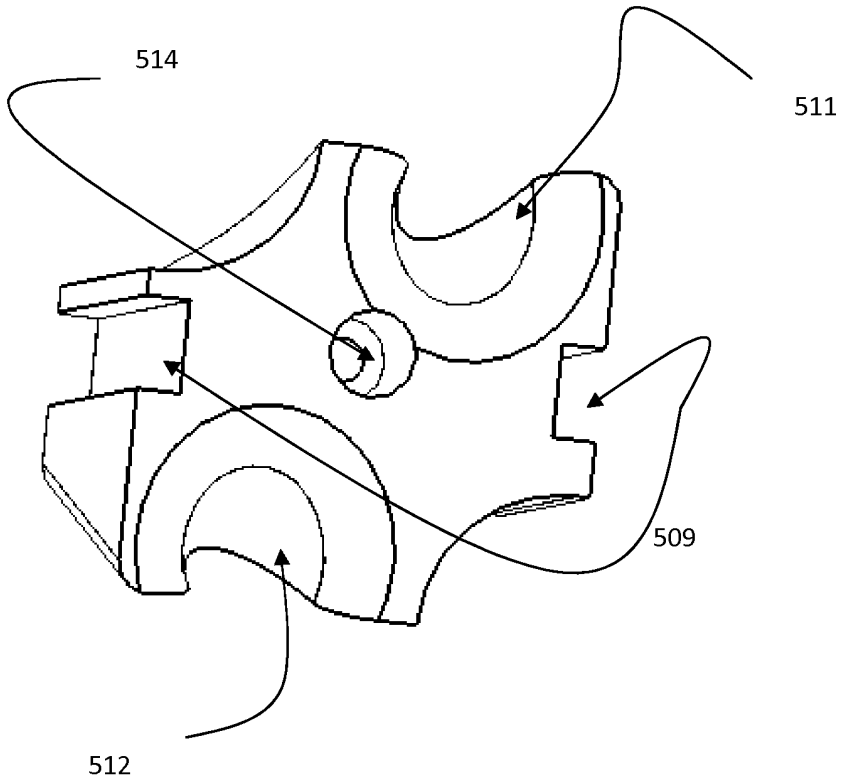

Fig. 8D

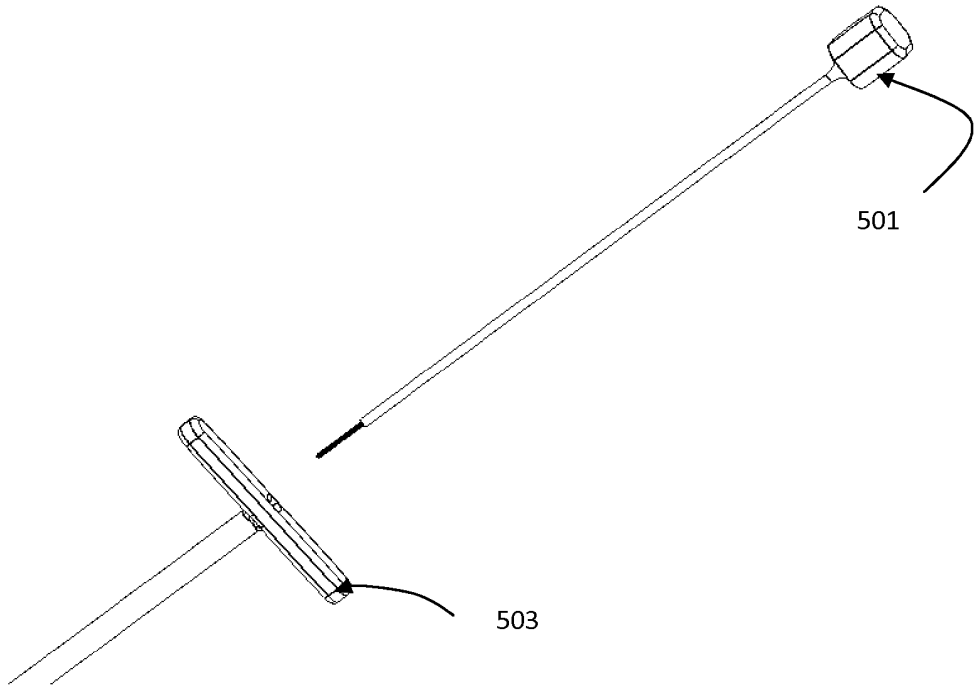

Fig. 8F

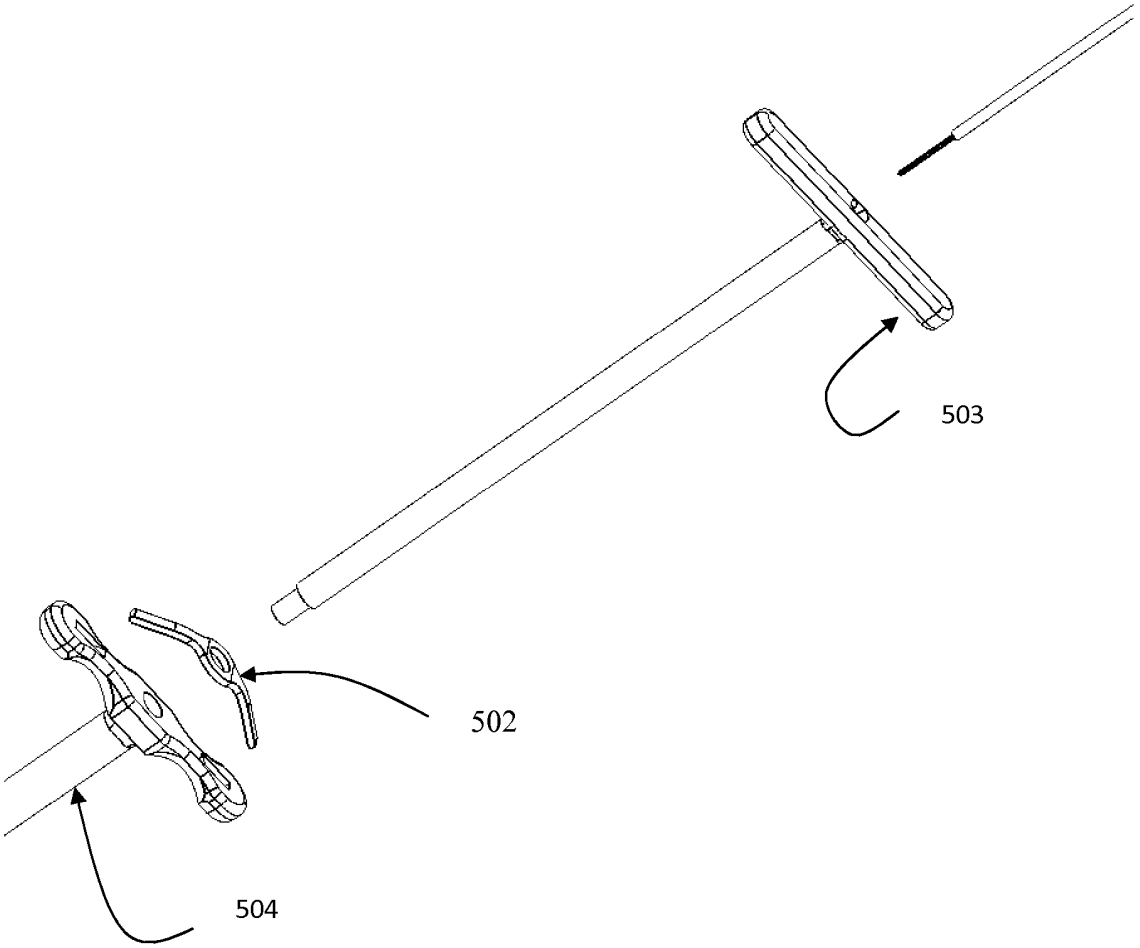

Fig. 8G

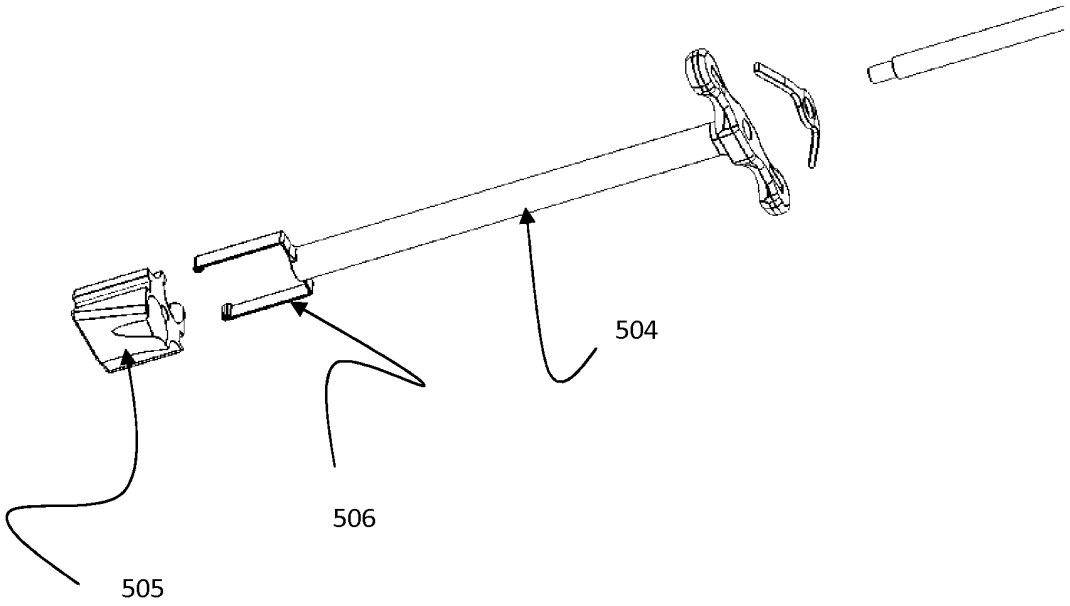

Fig. 8H

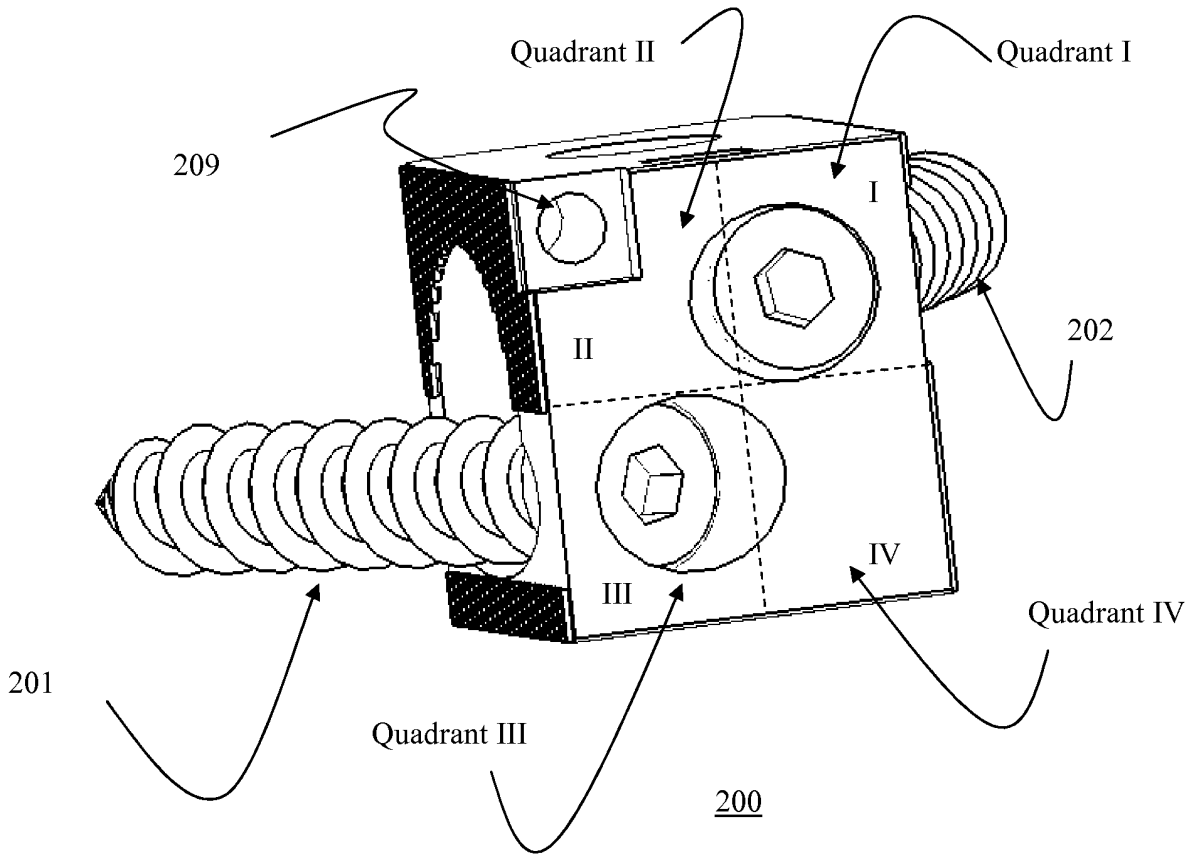
Quadrant II
Quadrant I
209
I
202
II
IV
III
Quadrant IV
201
Quadrant III
200

Fig. 7C(i)

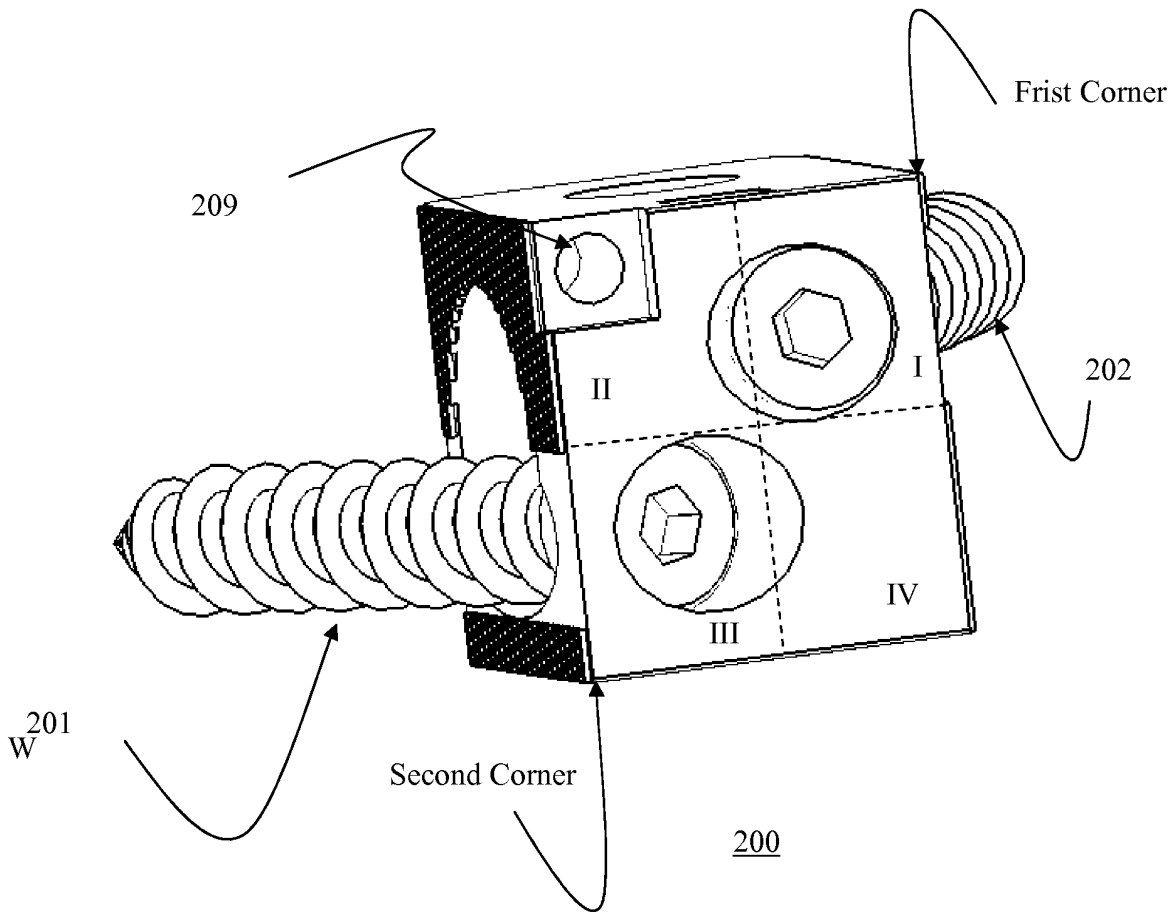

Fig. 7C(ii)

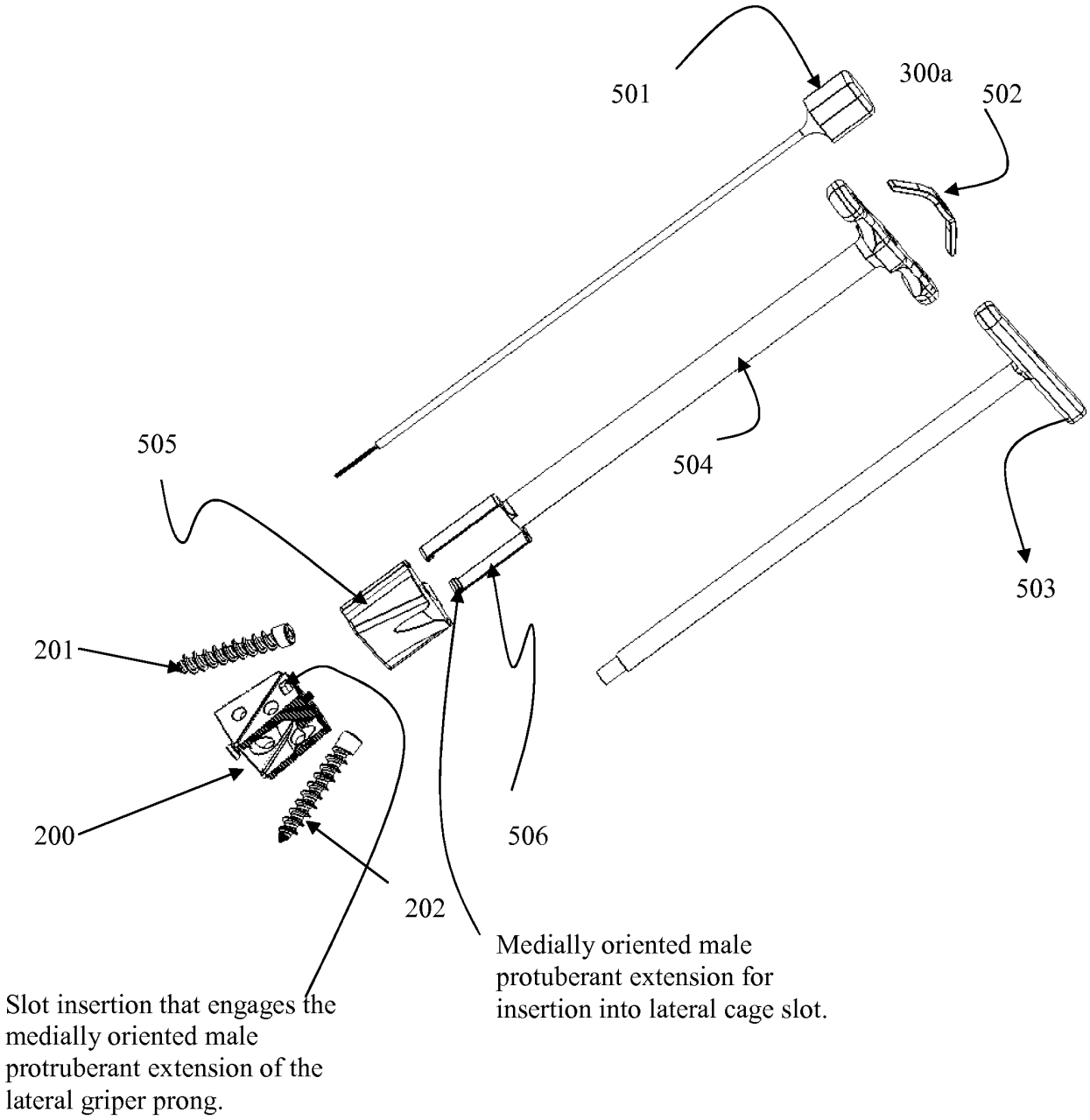
501
300a
502
504
505
503
201
200
506
202
Medially oriented male protuberant extension for insertion into lateral cage slot.
Slot insertion that engages the medially oriented male protruberant extension of the lateral griper prong.

Fig. 7D

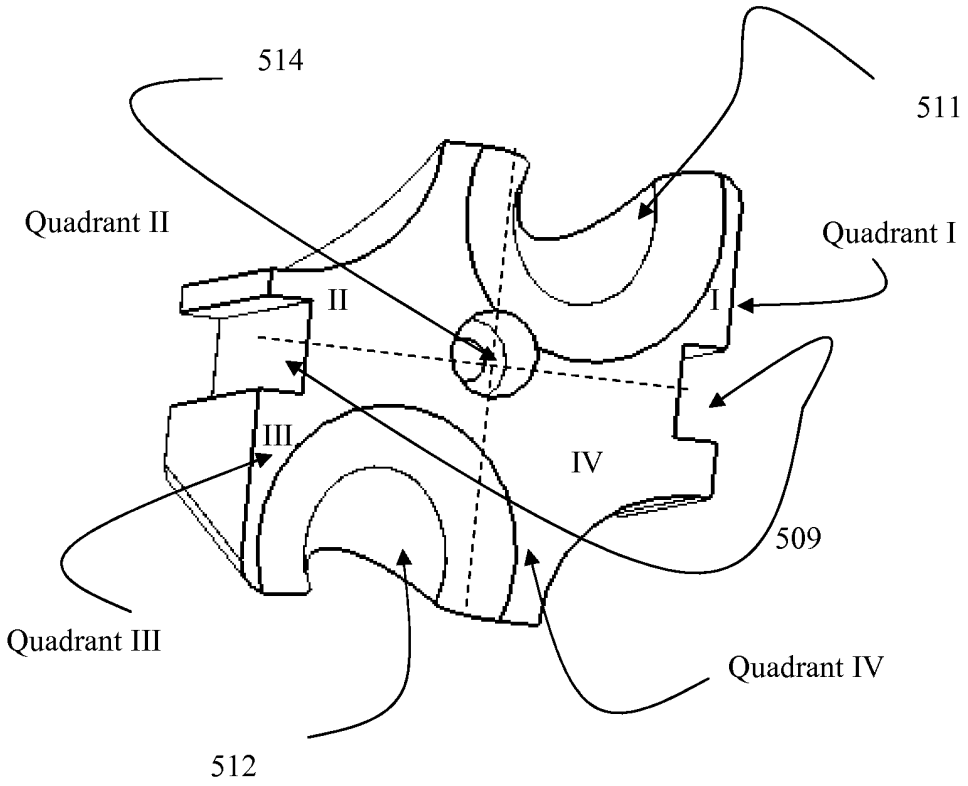
514
511
Quadrant II
Quadrant I
II
I
III
IV
509
Quadrant III
Quadrant IV
512

Fig. 7E

Doc Code: **TR.PROV**
Document Description: Provisional Cover Sheet (SB16)

PTO/SB/16 (04-07)
Approved for use through 06/30/2010 OMB 0651-0032
U.S. Patent and Trademark Office: U.S. DEPARTMENT OF COMMERCE
Under the Paperwork Reduction Act of 1995, no persons are required to respond to a collection of information unless it displays a valid OMB control number

Provisional Application for Patent Cover Sheet

This is a request for filing a PROVISIONAL APPLICATION FOR PATENT under 37 CFR 1.53(c)

Inventor(s)

Inventor 1 — Remove

Given Name	Middle Name	Family Name	City	State	Country i
Ahmnon	D.	Moskowitz	Rockville	MD	US

Inventor 2 — Remove

Given Name	Middle Name	Family Name	City	State	Country i
Mosheh	T.	Moskowitz	Rockville	MD	US

Inventor 3 — Remove

Given Name	Middle Name	Family Name	City	State	Country i
Pablo	A. Valdivia Y	Alvarado	Cambridge	MA	US

Inventor 4 — Remove

Given Name	Middle Name	Family Name	City	State	Country i
Eric		Sugalski	Boston	MA	US

Inventor 5 — Remove

Given Name	Middle Name	Family Name	City	State	Country i
Nathan	C.	Moskowitz	Rockville	MD	US

All Inventors Must Be Listed – Additional Inventor Information blocks may be generated within this form by selecting the **Add** button. Add

Title of Invention	ZERO-PROFILE EXPANDABLE INTERVERTEBRAL SPACER DEVICES FOR DISTRACTION AND SPINAL FUSION AND A UNIVERSAL TOOL FOR THEIR PLACEMENT AND EXPANSION
Attorney Docket Number (if applicable)	3003/0105PR09

Correspondence Address

Direct all correspondence to (select one):

◉ The address corresponding to Customer Number	◯ Firm or Individual Name
Customer Number	87409

Moskowitz Exhibit 2053,
Medtronic v. Moskowitz IPR2026-00216 p. 37

MOSKOWITZ-00083194

PTO/SB/16 (04-07)
Approved for use through 06/30/2010 OMB 0651-0032
U.S. Patent and Trademark Office: U.S. DEPARTMENT OF COMMERCE
Under the Paperwork Reduction Act of 1995, no persons are required to respond to a collection of information unless it displays a valid OMB control number

The invention was made by an agency of the United States Government or under a contract with an agency of the United States Government.
◉ No.
○ Yes, the name of the U.S. Government agency and the Government contract number are:

PTO/SB/16 (04-07)
Approved for use through 06/30/2010 OMB 0651-0032
U.S. Patent and Trademark Office: U.S. DEPARTMENT OF COMMERCE
Under the Paperwork Reduction Act of 1995, no persons are required to respond to a collection of information unless it displays a valid OMB control number

Entity Status

Applicant claims small entity status under 37 CFR 1.27

- (●) Yes, applicant qualifies for small entity status under 37 CFR 1.27
- ( ) No

Warning

Petitioner/applicant is cautioned to avoid submitting personal information in documents filed in a patent application that may contribute to identity theft. Personal information such as social security numbers, bank account numbers, or credit card numbers (other than a check or credit card authorization form PTO-2038 submitted for payment purposes) is never required by the USPTO to support a petition or an application. If this type of personal information is included in documents submitted to the USPTO, petitioners/applicants should consider redacting such personal information from the documents before submitting them to USPTO. Petitioner/applicant is advised that the record of a patent application is available to the public after publication of the application (unless a non-publication request in compliance with 37 CFR 1.213(a) is made in the application) or issuance of a patent. Furthermore, the record from an abandoned application may also be available to the public if the application is referenced in a published application or an issued patent (see 37 CFR1.14). Checks and credit card authorization forms PTO-2038 submitted for payment purposes are not retained in the application file and therefore are not publicly available.

Signature

Please see 37 CFR 1.4(d) for the form of the signature.

Signature	/John J. Dresch/			Date (YYYY-MM-DD)	2012-10-25
First Name	John	Last Name	Dresch	Registration Number (If appropriate)	46672

This collection of information is required by 37 CFR 1.51. The information is required to obtain or retain a benefit by the public which is to file (and by the USPTO to process) an application. Confidentiality is governed by 35 U.S.C. 122 and 37 CFR 1.11 and 1.14. This collection is estimated to take 8 hours to complete, including gathering, preparing, and submitting the completed application form to the USPTO. Time will vary depending upon the individual case. Any comments on the amount of time you require to complete this form and/or suggestions for reducing this burden, should be sent to the Chief Information Officer, U.S. Patent and Trademark Office, U.S. Department of Commerce, P.O. Box 1450, Alexandria, VA 22313-1450. DO NOT SEND FEES OR COMPLETED FORMS TO THIS ADDRESS. **This form can only be used when in conjunction with EFS-Web. If this form is mailed to the USPTO, it may cause delays in handling the provisional application.**

Privacy Act Statement

The Privacy Act of 1974 (P.L. 93-579) requires that you be given certain information in connection with your submission of the attached form related to a patent application or paten. Accordingly, pursuant to the requirements of the Act, please be advised that : (1) the general authority for the collection of this information is 35 U.S.C. 2(b)(2); (2) furnishing of the information solicited is voluntary; and (3) the principal purpose for which the information is used by the U.S. Patent and Trademark Office is to process and/or examine your submission related to a patent application or patent. If you do not furnish the requested information, the U.S. Patent and Trademark Office may not be able to process and/or examine your submission, which may result in termination of proceedings or abandonment of the application or expiration of the patent.

The information provided by you in this form will be subject to the following routine uses:

1. The information on this form will be treated confidentially to the extent allowed under the Freedom of Information Act (5 U.S.C. 552) and the Privacy Act (5 U.S.C 552a). Records from this system of records may be disclosed to the Department of Justice to determine whether disclosure of these records is required by the Freedom of Information Act.
2. A record from this system of records may be disclosed, as a routine use, in the course of presenting evidence to a court, magistrate, or administrative tribunal, including disclosures to opposing counsel in the course of settlement negotiations.
3. A record in this system of records may be disclosed, as a routine use, to a Member of Congress submitting a request involving an individual, to whom the record pertains, when the individual has requested assistance from the Member with respect to the subject matter of the record.
4. A record in this system of records may be disclosed, as a routine use, to a contractor of the Agency having need for the information in order to perform a contract. Recipients of information shall be required to comply with the requirements of the Privacy Act of 1974, as amended, pursuant to 5 U.S.C. 552a(m).
5. A record related to an International Application filed under the Patent Cooperation Treaty in this system of records may be disclosed, as a routine use, to the International Bureau of the World Intellectual Property Organization, pursuant to the Patent Cooperation Treaty.
6. A record in this system of records may be disclosed, as a routine use, t o a n other federal agency for purposes of National Security review (35 U.S.C. 181) and for review pursuant to the Atomic Energy Act (42 U.S.C. 218(c)).
7. A record from this system of records may be disclosed, as a routine use, to the Administrator, General Services, or his/her designee, during an inspection of records conducted by GSA as part of that agency's responsibility to recommend improvements in records management practices and programs, under authority of 44 U.S.C. 2904 and 2906. Such disclosure shall be made in accordance with the GSA regulations governing inspection of records for this purpose, and any other relevant (i.e., GSA or Commerce) directive. Such disclosure shall not be used to make determinations about individuals.
8. A record from this system of records may be disclosed, as a routine use, to the public after either publication of the application pursuant to 35 U.S.C. 122(b) or issuance of a patent pursuant to 35 U.S.C. 151. Further, a record may be disclosed, subject to the limitations of 37 CFR 1.14, as a routine use, to the public if the record was filed in an application which became abandoned or in which the proceedings were terminated and which application is referenced by either a published application, an application open to public inspection or an issued patent.
9. A record from this system of records may be disclosed, as a routine use, to a Federal, State, or local law enforcement agency, if the USPTO becomes aware of a violation or potential violation of law or regulation.

ZERO-PROFILE EXPANDABLE INTERVERTEBRAL SPACER DEVICES FOR DISTRACTION AND SPINAL FUSION AND A UNIVERSAL TOOL FOR THEIR PLACEMENT AND EXPANSION

Ahmnon D. Moskowitz, Rockville MD (US), Mosheh T. Moskowitz, Rockville, MD (US), Pablo A. Valdivia Y. Alvarado, Cambridge, MA ,(US), Eric Sugalski, Boston, MA (US), Nathan C. Moskowitz, Rockville, MD (US)

CROSS-REFERENCE TO RELATED APPLICATIONS

[0001] This application is a Continuation-in-part Application of co-pending application Serial No. 13,084,543, filed on April 11, 2011, which is a Divisional Application of application Serial No. 11/842,855, filed on August 21, 2007, now U.S. Patent No. 7,942,903 issued on May 17, 2011, and a Continuation Application of application Serial No. 13,108,982, filed on May 16, 2011, which also is a Continuation Application of application Serial No. 11/842,855, filed on August 21, 2007, now U.S. Patent No. 7,942,903 issued on May 17, 2011, which is a Continuation-In-Part Application of application Serial No. 11/536,815, filed on September, 29, 2006, now U.S. Patent No. 7,846,188 issued on December 7, 2010, which is a Continuation-In-Part Application of application Serial No. 11/208,644, filed on August 23, 2005, now U.S. Patent No. 7,704,279 issued on April 27, 2010, for which priority is claimed under 35 U.S.C. §120; and this application also claims priority under 35 U.S.C. § 119(e) of U.S. provisional application No. 60/670,231, filed on April 12, 2005; the entire contents of all the above identified patent applications are hereby incorporated by reference.

[0002] U.S. Patent Application Serial Nos. 13/084,543, filed on April 11, 2011 (Attorney Docket No. 3003/0105PUS2), 11/842,855, filed on August 21, 2007 (Attorney Docket No. 3003/0105PUS1), 11/536,815, filed on September 29, 2006 (Attorney Docket No. 3003/0104PUS2), and 11/208,644, filed on August 23, 2005 (Attorney Docket No. 3003/0104PUS1), each claim the benefit of priority under 35 U.S.C. § 119(e) of U.S. Provisional Application No. 60/670,231, filed on April 12, 2005 (Attorney Docket No. 3003/0102PR01), and this application hereby incorporates the claim of priority to this provisional application under 35 U.S.C. § 119(e) from the aforementioned intermediate applications (for which priority of each intermediate application is claimed under 35 U.S.C. § 120); and the entire contents of all of the above identified patent applications are hereby incorporated by reference in their entirety.

FIELD OF DISCLOSURE

[0003] The present invention relates to unique, universal Zero-Profile Expandable Intervertebral Spacer (ZP-EIS) devices for fusion and distraction throughout the entire spine which can be inserted via anterior, anterolateral, lateral, far lateral or posterior surgical approaches dependent on the need and preference. Multiple ZP-EIS embodiments each with unique mechanisms of calibrated expansion are presented. Two of these embodiments incorporate bi-directional fixating transvertebral (BDFT) screws and five other embodiments do not incorporate BDFT screws. A universal tool for their intervertebral placement and device expansion is also described.

[0004] The ZP-EIS embodiments with incorporated BDFT screws can be used as stand-alone intervertebral devices. They combine the dual functions of intervertebral calibrated

Moskowitz Exhibit 2053,
Medtronic v. Moskowitz IPR2026-00216 p. 42
MOSKOWITZ-00083199

expandable distraction, and segmental vertebral body spinal fusion. These embodiments are designed with bone cavities which can be filled with bone fusion material(s) to promote segmental spinal fusion.

[0005] The calibrated ZP-EIS embodiments without incorporated BDFT screws can also be used as stand-alone devices for calibrated intervertebral expansion and segmental vertebral body fusion. They are designed with bone cavities which can be filled with bone fusion material. If desirable they can be supplemented with other forms of screw stabilization.

[0006] All the ZP-EIS embodiments, especially those with incorporated BDFT screws may obviate the need for supplemental pedicle screw fixation in many situations. All the embodiments allow nuanced, fine-tuned incremental and calibrated distraction of the disc space to allow nerve root decompression in a minimally invasive and safe manner, as well as promoting segmental spinal fusion.

[0007] In our patent (US 2006/0241631 A1patent accepted -#?) we first introduced the terminology "zero-profile" relating to spinal fusion devices. In previous patents and multiple co-pending patents ( ) we described zero-profile non-expandable and expandable stand-alone intervertebral spinal fusion device embodiments with incorporated BDFT screws. In this patent we present an advanced ZP-EIS embodiment with BDFT screws which has an improved contoured body with tapered edges to more precisely insert into and conform to the biconcave disc space. We also present multiple more advanced ZP-EIS embodiments without accompanying BDFT screws each with very unique calibrated expandable mechanisms allowing minimally invasive intervertebral expansion, vertebral body distraction and segmental spinal fusion. The

Moskowitz Exhibit 2053,
Medtronic v. Moskowitz IPR2026-00216 p. 43
MOSKOWITZ-00083200

universal tool described can be adapted to implant all the intervertebral device embodiments herein described into the intervertebral space, and mechanically expand them.

BACKGROUND

[0008] The history and evolution of instrumented spinal fusion in the entire human spine has been reviewed in our prior PATENTS ( ) and copending applications Serial No. 11/536,815, filed on September, 29, 2006, and Serial No. 11/208,644, filed on August 23, 2005 (**etc etc**). Currently the majority of spinal fusion techniques are typically supplemented with posterior pedicle screw placement and/or anterior (or lateral) plating. Complications of pedicle screw placement in the spine include duration of procedure, significant tissue dissection and muscle retraction, misplaced screws with neural and/or vascular injury, excessive blood loss, need for transfusions, prolonged recovery, incomplete return to work, and excess rigidity leading to adjacent segmental disease requiring further fusions and re-operations. Recent advances in pedicle screw fixation including minimally invasive and image-guided technology, and the development of flexible rods, imperfectly address some but not all of these issues.

Anterior/and or lateral plating because of the plates' elevated profiles can be complicated by esophageal, or major vascular injury. The zero-profile embodiments presented here avoid these complications.

Current non-expandable intervertebral spacers must be manufactured with different heights, and the most appropriate sized spacer is selected for insertion. In these situations

Moskowitz Exhibit 2053,
Medtronic v. Moskowitz IPR2026-00216 p. 44
MOSKOWITZ-00083201

the vertebral bodies are forcefully distracted to allow placement of an imperfectly fitting spacer. These aremost often supplemeneted with pedicle screw and/or or plate fixation. This invention allows a more precisely tailored complimentary fit between spacer and disc space, allowing the spacer to expand gradually in a calibrated manner, and to incrementally achieve the precise fit and degree of distraction desirable. Thus this process is more individualized for every patient and applies less forceful disruption to the intervertebral space thereby improving safety and enhancing effectiveness of the placement of intervertebral spacers. All these embodiments are zero-profile and thus do not damage or indent overlying soft tissue or vascular structures further decreasing morbidity.

SUMMARY

[0009] Herein we describe multiple ZP-EIS device embodiments which combine in a single construct the dual functions of calibrated expandable intervertebral spacer distraction maintaining disc space height, and simultaneous segmental vertebral body spinal fusion.

[0010] To achieve safe, effective zero-profile and minimally invasive segmental spinal fusion, applicants propose the use of novel zero-profile calibrated expandable spacer (ZP-EIS) devices with or without BDFT screws which can be strategically inserted into the intervertebral disc space via anterior, anterio-lateral, lateral, far lateral or posterior surgical approaches.

In our previous patents ( ) we designed expanding intervertebral spacers which

Moskowitz Exhibit 2053,
Medtronic v. Moskowitz IPR2026-00216 p. 45
MOSKOWITZ-00083202

incorporated BDFT screws. One of these embodiments consisted of two sliding triangular bases to house two screws driven in two opposing directions which can be expanded in two simultaneous directions, height and depth, by turning a built-in screw adjuster. This was facilitated by a combined external drill/screw guide/cage expander to further enhance trajectory precision and to simultaneously expand the screw box in height and depth to custom-fit the individual disc space height (Patent #). We further describe this universal tool here and describe its adaptability to our original design(accepted sliding box patent) and to all our new embodiments with and without BDFT screws.

Our evolved zero-profile expandable intervertebral spacer (ZP-EIS) embodiment with incorporated BDFT screws presented here is more finely tapered and contoured to more easily allow insertion and conformation to the biconcave disc space.

The ZP-EIS device embodiments without incorporated BDFT screws presented have the ability to incrementally and uniformly separate and distract the vertebral bodies. Each embodiment has a very unique mechanically designed mechanism of incremental expansion.The devices are all designed with cavities for bone fusion giving the surgeon the option to use these as stand-alone fusion/spacer devices or as supplemental devices if other screw fixation is deemed necessary. These innovations represent a continued evolution of our concept of zero-profile calibrated expandable intervertebral distraction/fusion spacers described in our previous patents and co-pending patent applications.

[0011] In the ZP-EIS embodiments presented here with incorporated BDFT screws, a rostral-directed screw is passed through one built-in screw guide of the device which then is inserted and screwed into the superior vertebral body. Then a caudally directed screw

Moskowitz Exhibit 2053,
Medtronic v. Moskowitz IPR2026-00216 p. 46
MOSKOWITZ-00083203

is passed through an adjacent built-in screw guide which then is inserted and screwed into the inferior vertebral body. The novelty of this design is the built-in prescribed angles of the integral screw guides which allow the transvertebral penetration into the vertebral bodies. This is a truly amazing feat accomplished particularly in the posterior or lateral/far lateral lumbar spine considering the small anatomically restricted work zone within which to work, which is very narrowly prescribed by obtuse angulations between screw and intervertebral bone surfaces, and by nerve root, facet joint and pedicle. In our previous patent ( ) we included an angled screw driver specifically designed to fit these devices if a straight screw driver impedes screw placement. Hence these external tools provide the means in any circumstance to accomplish precision screw trajectory.

[0012] The zero-profile embodiments described herein compared to our previous co-pending patent and patent applications' designs provide enhanced individualized intervertebral conformation, and multiple methods of finely calibrating intervertebral expansion, and vertebral body distraction further reducing morbidity and enabling more minimally invasive surgical methods of vertebral body distraction and segmental fusion.

[0013] The box casings of all the embodiments presented here have perforations to allow bone packing for fusion. The devices all prevent subsidence. Both the inside of the denuded intervertebral space, and the devices can be packed with autologous or allograft bone, BMP, DBX or similar osteoconductive material.

[0014] It is believed that these zero-profile EIS embodiments, in particular those with incorporated BDFT screws, provide as strong or stronger segmental fusion as pedicle screws without the complications arising from pedicle screw placement which include screw misplacement with potential nerve and/or vascular injury, violation of healthy

Moskowitz Exhibit 2053,
Medtronic v. Moskowitz IPR2026-00216 p. 47
MOSKOWITZ-00083204

facets, possible pedicle destruction, blood loss, and overly rigid fusions. In the case of the posterior Lumbar spine by placing screws across the intervertebral space from vertebral body to vertebral body, engaging anterior and middle spinal columns, and not the vertebral bodies via the transpediclar route, the healthy facet joints, if they exist, are preserved. Because this technique accomplishes both anterior and middle column fusion, without rigidly fixating the posterior column, it in essence creates a flexible fusion. This device therefore is a flexible fusion device because the preserved posterior facet joints retain their function achieving at least a modicum of mobility and hence a less rigid (i.e. a flexible) fusion.

[0015] The very advantage of transpedicular screws which facilitate a strong solid fusion by rigidly engaging all three spinal columns is the same mechanical mechanism whereby complete inflexibility of all columns is incurred thereby leading to increasing rostral and caudal segmental stress which leads to an increased rate of re-operation.

[0016] Transvertebral fusion also leads to far less muscle retraction, blood loss, and significant reduction in O.R. time. Thus the complication of pedicular screw pull-out and hence high re-operation rate associated with the current embodiment of flexible fusion pedicle screws/rods is obviated.

[0017] Although one can opt to supplement these embodiments with transpedicular screws there would be no absolute need for supplemental pedicle screw fixation with these operative techniques. The expandable spacers without BDFT screws can be supplemented with other screw stabilization if desired.

Because all these embodiments are zero-profile they also obviate the morbidity involved with profiled anterior or lateral plating. Multi-level fusions can be performed with all

Moskowitz Exhibit 2053,
Medtronic v. Moskowitz IPR2026-00216 p. 48
MOSKOWITZ-00083205

these embodiments.

[0018] Currently failed anterior lumbar arthroplasties are salvaged by combined anterior and posterior fusions. The ZP-EIS embodiments with incorporated BDFT screws could be utilized as a one-step salvage operation for failed/extruded anteriorly placed lumbar artificial discs obviating the above salvage procedure which has far greater morbidity.

BRIEF DESCRIPTION OF DRAWINGS

[0019] Figures 1A-B illustrates Embodiment I: the non-tapered sliding base ZP-EIS device with incorporated BDFT screws in sagittal-oblique (Figure 1A), and exploded (Figure 1B) views.

Figures 2A-D illustrates Embodiment II: the tapered sliding base ZP-EIS device with incorporated BDFT screws in closed (Figure 2A), semi- expanded (Figure 2B), and fully expanded (Figure 2C) positions, and in an exploded view (Figure 2D).

Figures 3A-D illustrates Embodiment III: the scissors jack driven ZP-EIS device without incorporated BDFT screws in closed (Figure 3A), semi- expanded (Figure 3B), and fully expanded (Figure3C) positions, and in exploded view (Figure 3D).

Figures 4A-C illustrates Embodiment IV: the tapered thread driven ZP-EIS device without incorporated BDFT screws in closed (Figure 4A), semi- expanded /fully expanded positions (Figure 4B), and in cross-sectional view (Figure 4C).

Figures 5A-D illustrates Embodiment V: the dry anchor driven ZP-EIS device without incorporated BDFT screws in closed (Figure 5A), semi- expanded (Figure 5B), and fully expanded (Figure 5C) positions, and in an exploded view (Figure 5D).

Moskowitz Exhibit 2053,
Medtronic v. Moskowitz IPR2026-00216 p. 49
MOSKOWITZ-00083206

Figures 6A-D illustrates Embodiment VI: the modified wedge driven ZP-EIS device without incorporated BDFT screws in closed (Figure 6A), semi- expanded (Figure 6B), and fully expanded (Figure 6C) positions, and in an exploded view (Figure 6D).

Figures 7A-D illustrates Embodiment VII: the worm drive ZP-EIS device without incorporated BDFT screws in closed (Figure 7A), semi- expanded (Figure 7B), and fully expanded (Figure 7C) positions, and in an exploded view (Figure 7D).

Figures 7C(i) and 7C(ii) illustrate top, perspective view of an intervertebral cage construct according to an embodiment of the invention.

FIGS. 7D illustrates a top, perspective, exploded view of a positioning tool/screw guide/box expander.

FIG. 7E illustrates a superior oblique perspective view of the positioning tool/drill guide/box expander component.

Figure 8 A-C illustrate the positioning tool/screw guide/box expander in oblique

perspective (FIG. 8A), lateral (FIG. 8B), and exploded (FIG. 8C) views. It is illustrated attaching to embodiment I.

FIG. 8D illustrates a superior oblique perspective view of the positioning tool/drill

guide/box expander component which is optionally used for embodiments I and II..

Figures 8 E-G illustrate the sequential steps (I-III) of the positioning tool/screw

guide/box expander assembly. Step I (FIG. 8E), step II (FIG. 8F), and step III (FIG. 8G).

FIGS. 8H illustrates a three-dimensional view of the positioning tool for

Moskowitz Exhibit 2053,
Medtronic v. Moskowitz IPR2026-00216 p. 50
MOSKOWITZ-00083207

impaction and placement of two transvertebral screws for embodiments I and II.

DETAILED DESCRIPTION OF THE INVENTION

1. THE MEDICAL DEVICE

[0020] Referring to Figures 1-8, the above described problem can be solved in the spine by insertion into the denuded intervertebral disc space ZP-EIS embodiments I-VII.

[0021] Figures 1A-B illustrate three-dimensional views of the ZP-EIS embodiment I (100) with two BDFT screws 101, 102.

[0022] The expandable ZP-EIS device100 consists of top and bottom triangular sliding bases 103, 104 (Figures 1 A-B). The superior and inferior segments of the height/depth adjusting screw 105 are integrated and connected to the two separate top and bottom triangular bases 103, 104, respectively. By turning this adjusting (rotation) screw 105 back and forth i.e. clock-wise, and counter clockwise, the sliding rails 106 of the top triangular base 103 (Figures 1A-B)) slide up and down the rail inserts 107 on the bottom triangular base 104 (Figures 1A-B)). This action will simultaneously alter the intervertebral height and depth of the device 100 allowing individualized custom fitting of the ZPEIS device 100 conforming to the dimensions of the disc space.

[0023] Transvertebral screw 101 penetrates the top base 103, and transvertebral screw 102 traverses the bottom base 104 of the screw box 100. The two screws 101, 102 traverse the screw box 100 in opposing directions, bi-directionally. The external edges of the triangular bases 103, 104 in contact with vertebral body surfaces include ridges 107. This facilitates the ZP-EIS device 100 incorporation into and fusion with the superior and

Moskowitz Exhibit 2053,
Medtronic v. Moskowitz IPR2026-00216 p. 51
MOSKOWITZ-00083208

inferior vertebral bodies (Figures 1A-B). Both top and bottom ZP-EIS bases 103, 104 are perforated with holes 108 to allow bone placement for fusion. The entire construct, furthermore, is hollow to allow bone filling. Hence this device functions as both an intervertebral bone fusion spacer and bi-directional transvertebral screw fusion device.

[0024] Figures 2A-D illustrate the ZP-EIS Embodiment II. This device incorporates BDFT screws and employs a fusion wedge mechanism of expansion.

[0025] The contoured top ( ) and bottom ( ) housing which have tapered edges are coupled to each other by a diagonal dovetail interface ( ) which constrains the components to translate linearly relative to each other. The linear translation causes a vertical separation of the top and bottom housing surfaces which are parallel to each other. The position is secured and adjusted by a threaded rotation screw ( ) coupled to a nut ( ) and a retaining ring ( ) and passed through the top ( ) and bottom ( ) housing pieces. As the threaded rotation screw rod is rotated further into the nut, the housing pieces expand vertically.

[0026]. By turning this adjusting (rotation) screw ( ) back and forth i.e. clock-wise, and counter clockwise, the sliding rails ( ) of the top housing piece ( ) slide up and down the rail inserts ( ) on the bottom housing piece ( ). This action will simultaneously alter the intervertebral height and depth of the device ( ) allowing individualized custom fitting of the ZP-EIS conforming to the dimensions of the disc space. Transvertebral screw1 ( ) penetrates the top housing piece ( ), and transvertebral screw 2 ( ) traverses the bottom housing piece ( ) of the device ( ). The two screws (,) traverse the device ( ) in opposing directions, bi-directionally. The external edges of the housing pieces in contact with vertebral body surfaces include ridges ( ). This facilitates the ZP-EIS

Moskowitz Exhibit 2053,
Medtronic v. Moskowitz IPR2026-00216 p. 52
MOSKOWITZ-00083209

device ( ) incorporation into and fusion with the superior and inferior vertebral bodies (Figures 2A-D). Both top and bottom ZP-EIS housing bases (,) are perforated with holes ( ) to allow bone placement for fusion. The entire construct, furthermore, is hollow to allow bone filling. Hence this device functions as both an intervertebral bone fusion spacer and bi-directional transvertebral screw fusion device.

[0027] Its tapered edge (2A-B) allows easier introduction and insertion into the disc space.

[0028] [0026 Figures 3A-D illustrate the ZP-EIS Embodiment III which employs a scissor jack expansion mechanism.

[0029] In this embodiment the top ( ) and bottom ( ) housing are attached by one internal ( ), and two external linkage arms (,). It has indentations on their lateral sides close to the top of the device to mate with the prongs of the universal tool to assist in grasping, inserting and impacting the device. A lead screw ( ) is mounted in the bottom housing ( ) and secured in place with a retaining ring ( ). As the lead 9rotation) screw ( ) is rotated by an external tool (Figure 8), it causes the linear displacement of the separation block ( ) which is hinged to the internal linkage ( ). The horizontal motion of the separation block causes the top ( ) and bottom ( ) housing pieces to separate vertically. The separation distance depends on the amount of lead (rotation) screw rotation, and is limited by separation block's freedom to move within the bottom housing. Eight pins ( ) secure the external linkage arms (,) the top and bottom housing units (,) and to the separation block ( ). Top and bottom housing (,) have cavities( ) for bone incorporation/fusion.

[0030] Figures 4A-C illustrate ZP-EIS embodiment IV which employs a tapered thread

Moskowitz Exhibit 2053,
Medtronic v. Moskowitz IPR2026-00216 p. 53
MOSKOWITZ-00083210

mechanism of expansion.

[0031] The top ( ) and bottom ( ) housing are attached by two pins (,) which allow rotation relative to each other about the axis of the pins. It has indentations ( ) on their lateral sides close to the top of the device to mate with the prongs of the universal tool to assist in grasping, inserting and impacting the device. The bottom housing ( ) contains a mount for the rotation screw (Fig 4C), which can control the relative angular orientation of the two housing pieces. As the screw is rotated by an external tool (Figure 8)), it engages the internal teeth/ridges ( ) of the top housing and acts as a wedge to rotate the top away from the bottom housing piece. Notice the sloped ridge ( ) in Fig 4C. As the rotating screw advances the top rotates away more and more. Bone cavities ( ) are incorporated into top and bottom housing for bone fusion.

[0032] Figures 5A-D illustrate ZP-EIS embodiment V which employs an anchor mechanism of expansion.

[0033] The top ( ) and bottom ( ) housing are attached by two pins (,) which allow rotation relative to each other about the axis of the pins. It has indentations ( ) on their lateral sides close to the top of the device to mate with the prongs of the universal tool to assist in grasping, inserting and impacting the device. The bottom housing ( ) contains a mount for the lead (rotation) screw ( ), which can control the relative angular orientation of the two housing pieces. The lead (rotation) screw ( ) is secured with two retaining rings (,). As the screw is rotated by an external tool (not illustrated), it causes lateral motion of a translation nut ( ), which is attached to two linkage bars to a second nut ( ) fixed to the bottom housing. Six pins ( ) secure the linkage bars ( ) to each other and to the translation nuts ( ). As the translation nuts moves, the linkage bars ( ) extends

Moskowitz Exhibit 2053,
Medtronic v. Moskowitz IPR2026-00216 p. 54
MOSKOWITZ-00083211

outside of the bottom housing, pushing against the top housing. The linkage bars may be replaced by a solid material such as spring steel which can bend to produce the same effect. Bone cavities ( ) are incorporated into top and bottom housing for bone fusion.

[0034] Figures 6A-D illustrate ZP-EIS embodiment VI which employs a modified wedge expansion mechanism.

[0035] The top ( ) and bottom ( ) housing are attached by two pins ( ) which allow rotation relative to each other about the axis of the pins. It has indentations ( ) on their lateral sides close to the top of the device to mate with the prongs of the universal tool to assist in grasping, inserting and impacting the device. The bottom housing ( ) contains a mount for the lead (rotation) screw ( ), which can control the relative angular orientation of the two housing pieces ( ). The lead (rotation) screw ( ) is secured with two retaining rings ( ). As the screw is rotated by an external tool (Figure 8), it causes lateral motion of a wedge-shaped translation nut ( ). The nut ( ) engages the inner tapered surface of the top housing ( ) and forces the top housing piece( ) to rotate away from the bottom housing ( ). Bone cavities ( ) are incorporated into top and bottom housing for bone fusion.

[0036] Figures 7A-D illustrate ZP-EIS embodiment VII which employs a worm drive (gear)mechanism.

[0037] The worm drive design allows the user to rotate a worm gear/drive ( ) with an external tool (Figure 8) to control the translation of the top housing ( ) relative to the bottom housing ( ). The worm gear drive ( ) engages a spur gear mount ( ) which has internal threading that couples it to the top housing. The top housing ( ) has four pins ( ) which extend into the bottom housing ( ). These pins prevent the top housing from

Moskowitz Exhibit 2053,
Medtronic v. Moskowitz IPR2026-00216 p. 55
MOSKOWITZ-00083212

rotating with the spur gear, and constrain it to translate linearly. The bottom housing is comprised of two halves (,) to secure the worm and spur gears in place. A worm retaining ring ( ) and a spur retaining ring ( ), are also used to secure the worm gear drive ( ) and the spur gear mount ( ). Bone cavities ( ) are incorporated into top and bottom housing for bone fusion. It has indentations ( ) on its lateral sides close to the top of the device to mate with the prongs of the universal tool to assist in grasping, inserting and impacting the device.

[0038] Figures 8A--C illustrate three-dimensional views of the external drill/screw guide-box expander universal tool 500 which assists in both screw trajectory and box expansion for embodiments I and II, and for device expansion for embodiments III – VII. The same universal tool is utilized for all the embodiments (I-VII), however, the external drill/screw guide is not used for embodiments II-VII. The prongs are inserted into the indentations of the sides of all embodiment (I-VII) devices, and implant the device into the intervertebral space. Once implanted and impacted, the Allen key (Figure 8) expands the device by turning the adjustment (rotation) screw.

[0039] The key components of this device include an Allen key 501, a spring 502, a handle 503, a griper 504 and a screw guide 505. The Allen key 501 when inserted in the insertion 514 and turned, turns the rotation screws of all the embodiments I-VII. The griper 504 has griper prongs 506 which insert into grooves of the screw guide 505 and the screw box indentations 200 (FIGS. 8A-D) in embodiment I (illustrated) as well as in similar device indentations in embodiments II-VII (not illustrated).

[0040] Figure 8D illustrates a superior oblique view of the screw guide 505 demonstrating insertions 509 for griper prong 506, built-in trajectory guides 511, 512 for

Moskowitz Exhibit 2053,
Medtronic v. Moskowitz IPR2026-00216 p. 56
MOSKOWITZ-00083213

insertions of screws 101 and 102, and the Allen key 501. This is used exclusively for embodiments I and II which has BDFT screws.

[0041] FIGS. 8E-G illustrate three-dimensional views of the sequential steps necessary for the external guide assembly. FIG. 8E illustrates the insertion of the Allen key 501 into the handle 503. FIG. 5F illustrates the insertion of the handle 503 through the spring 502 and griper 504. FIG. 8G illustrates insertion of the griper 504 into the screw guide 505. The latter is used exclusively for embodiments I and II.

[0042] FIGS. 8H illustrates a three-dimensional view of the positioning tool 500a for impaction and placement of two transvertebral screws 201, 202 for embodiments I and II.

2. THE SURGICAL METHOD

[0043] The surgical steps necessary to practice the present invention will now be described. The procedures can be performed open, microscopic, closed tubular or endoscopic. Fluoroscopic guidance can be used with any of these procedures.

[0044] A ZP-EIS device embodiment (I-VII) are inserted into the intervertebral space after an adequate discectomy is performed in any disc space throughout the entire spine upon their exposure anteriorly, anterio-laterally, laterally, far laterally or posteriorly.

[0045] For embodiments I-II the ZP-EIS device is inserted into the disc space by the universal tool. The tool grabs prongs attach to the insets on the side of the devices. Once in the disc space the rotation screw is turned by rotating the Allen key of the tool expanding the device to the desirable disc height achieving the desirable intervertebral

Moskowitz Exhibit 2053,
Medtronic v. Moskowitz IPR2026-00216 p. 57
MOSKOWITZ-00083214

distraction deemed necessary for the individual patient and disc space. Once this is achieved BDFT screws are inserted and screwed into the vertebral body above and below securing the device to the vertebral bodies with screws. Prior to implantation of the device, the bone cavities are filled with any type of bone fusion material.

[0046] For embodiments III-VII the ZP-EIS device is inserted into the disc space by the same universal tool. The tool grabs prongs attach to the insets on the side of the devices. Once in the disc space the rotation screw is turned by rotating the Allen key of the tool expanding the device to the desirable disc height achieving the desirable intervertebral distraction deemed necessary for the individual patient and disc space. Prior to implantation of the device, the bone cavities are filled with any type of bone fusion material.

[0047] The present inventions may provide effective and safe techniques that overcome the problems associated with current transpedicular and/or plated fusion technology employed for many degenerative stable and unstable spine diseases. These inventions could replace much pedicle screw-based and plated based instrumentation in many but not all degenerative spine conditions.

[0048] The speed and simplicity of the surgical implantation of ZP-EIS devices far exceeds that of current pedicle screw technology. Furthermore, these zero-profile devices have markedly significantly decreased risk of misguided screw placement, and hence decreased risk of neural and vascular injury, and blood loss. They have decreased recovery and back to work time. These devices most likely lead to similar if not equal fusion with significantly less morbidity, and hence overall make them a major advance in the evolution of spinal instrumented technology leading to advances in the care of the

Moskowitz Exhibit 2053,
Medtronic v. Moskowitz IPR2026-00216 p. 58
MOSKOWITZ-00083215

spinal patient.

Moskowitz Exhibit 2053,
Medtronic v. Moskowitz IPR2026-00216 p. 59

MOSKOWITZ-00083216

We claim:

For Embodiments I and II:

1) An intervertebral fusion device that uses a threaded rod mechanism located at the peripheral of the box to control expansion of the device, There is a cavity within the walls for placement of bone material for fusion.

2) An intervertebral fusion device that has a threaded rod which can obstruct (inhibit) expansion of the device when it is not being turned. The threaded rod is at the front anterior part of the box.

3) An intervertebral fusion device that has a threaded rod which exerts a clamping force to expand the device until it properly accommodates the dimensions of the intervertebral disc space and distracts the space based on individual anatomy and surgical judgment. There is a cavity for bone in-between the walls of the box.

4) An expandable intervertebral fusion device that has indentations on its sides to accommodate a placement tool.

5) An expandable intervertebral fusion device which can be adjusted by using a threaded rod as a wedge to pivot components within the device. The threaded rod is accessible from the front anterior of the box

6) An expandable fusion device that uses a threaded rod to expand a spacer The threaded rod is used as a wedge to mechanically separate the pieces. The threaded rod is accessible from the front anterior of the box.

7) An expandable fusion device comprised of wedge components which translate relative

Moskowitz Exhibit 2053,
Medtronic v. Moskowitz IPR2026-00216 p. 60

MOSKOWITZ-00083217

to each other along a contact. The degree of expansion is determined by an adjustment rod located at the peripheral of the box. .

8) An expandable fusion device comprised of components which are mechanically linked together. The expansion of the device is controlled by the user via an adjustment rod coupled to a mechanical transmission that causes mechanical components within the device to separate The threaded rod is accessible from the front anterior of the box

9) An expandable fusion device wherein the position of the device is secured and adjusted by a threaded rod that is mechanically linked to housing pieces. When the threaded rod is rotated it forces the pieces to separate.

10) An intervertebral fusion device wherein the two internal screw guides are in the top housing unit.

11) An intervertebral fusion expansile device wherein the center of the two internal screw guides could be in quadrants I and III or II and IV

12) An expandable fusion device that uses a threaded rod (rotation screw) to expand the device using a metal driver as the wedge to mechanically separate the pieces.

13) An expandable fusion device adjusted by using a threaded rod (rotation screw) as a wedge to offset the opposing cages.

Moskowitz Exhibit 2053,
Medtronic v. Moskowitz IPR2026-00216 p. 61
MOSKOWITZ-00083218

Additional claims for embodiment II

1) An expandable intervertebral fusion device wherein its position is secured and adjusted by a threaded rod (rotation screw) coupled to a nut and passed through the top and bottom housing pieces. As the threaded rod is rotated further into the nut, the pieces separate.

2) An expandable intervertebral fusion device with a tapered edge to allow contoured insertion into the disc space.

3) An intervertebral fusion device wherein the internal screw guides for screw insertion within the device are diagonal to each other within the xyz plane.

4) An intervertebral fusion device wherein the internal screw guides can be adjacent and somewhat diagonal to each other within the xyz plane.

5) An intervertebral fusion device wherein the majority each of the 2 screw holes can be in quadrant I and III or II and IV within the xyz plane.

6) An intervertebral fusion device wherein the screw guides can have approximately the same xy coordinates and Have different z coordinates or vice versa

7) An intervertebral fusion device wherein the center of the two internal screw guides could be in quadrants I and III or II and IV within the xyz plane.

8) An intervertebral fusion device wherein one screw guide is in the top housing unit, and another screw guide is in the bottom housing unit

For Embodiment III:

1) An intervertebral fusion device that uses a threaded rod (rotation screw) to engage a

Moskowitz Exhibit 2053,
Medtronic v. Moskowitz IPR2026-00216 p. 62
MOSKOWITZ-00083219

moveable component which engages a linkage to expand the device.

2) An intervertebral fusion device that uses a threaded rod (rotation screw) to engage a wedge which engages its attaching linkages to expand the device.

3) An expandable fusion device that can be adjusted using a threaded rod (rotation screw) coupled to a scissor-jack linkage.

For Embodiment IV

1) An expandable fusion device held together with fastener (s). These fasteners constrain the box to one degree of freedom. Part of the mechanism contains a mount for the rotation screw, which can control the movement of the pieces. As the screw is turned it engages the teeth of the mechanism and acts as a wedge to rotate the pieces away from each other.

2) An expandable fusion device adjusted by using a threaded rod (rotation screw) as a wedge to offset the opposing cage surfaces.

Foe Embodiment V

1) An expandable fusion device that uses a threaded rod (rotation screw) to expand the device using a metal driver as the wedge to mechanically separate the pieces.

2) An expandable fusion device that can be adjusted by a threaded rod (rotation screw) coupled to a nut which translates to deform an elastomeric material used to force the expansion of the device.

For Embodiment VI

Moskowitz Exhibit 2053,
Medtronic v. Moskowitz IPR2026-00216 p. 63
MOSKOWITZ-00083220

1) An expandable fusion device that has a threaded rod (rotation screw) that engages a wedge to control the expansion of the device.

2) An expandable fusion device that can be contained by fasteners and retaining rings.

3) An expandable fusion device that can be adjusted by a threaded rod (rotation screw) coupled to a wedge that can move the opposing cage surfaces.

For embodiment VII

1) An expandable fusion device that uses a worm drive to turn a gear that acts as a wedge to expand the device.

2) An expandable fusion device that includes fasteners and retaining rings containing and constraining the device pieces.

3) An expandable fusion device that can be adjusted by a worm gear coupled to an internally threaded spur gear which, upon rotation, linearly advances a threaded component.

For tool

A tool which comprises a handle, a gripper cooperating with the handle and having a plurality of prongs, a screw guide held in place the plurality of prongs, for controlling the direction of self-drilling screws that are screwed into the vertebral bodies, and an Allen key which expands expandable intervertebral devices.

Moskowitz Exhibit 2053,
Medtronic v. Moskowitz IPR2026-00216 p. 64
MOSKOWITZ-00083221

Abstract

Disclosed are unique, universal Zero-Profile Expandable Intervertebral Spacer (ZP-EIS) devices for fusion and distraction throughout the entire spine which can be inserted via anterior, anterolateral, lateral, far lateral or posterior surgical approaches dependent on the need and preference. Multiple ZP-EIS embodiments each with unique mechanisms of calibrated expansion are presented. Two of these embodiments incorporate bi-directional fixating transvertebral (BDFT) screws and five other embodiments do not incorporate BDFT screws. A tool for implantation into the intervertebral device and calibrated device expansion is also disclosed.

Moskowitz Exhibit 2053,
Medtronic v. Moskowitz IPR2026-00216 p. 65

MOSKOWITZ-00083222

Electronic Patent Application Fee Transmittal

Application Number:	
Filing Date:	
Title of Invention:	ZERO-PROFILE EXPANDABLE INTERVERTEBRAL SPACER DEVICES FOR DISTRACTION AND SPINAL FUSION AND A UNIVERSAL TOOL FOR THEIR PLACEMENT AND EXPANSION
First Named Inventor/Applicant Name:	Ahmnon D Moskowitz
Filer:	John Jeremy Dresch
Attorney Docket Number:	3003/0105PR09

Filed as Small Entity

Provisional Filing Fees

Description	Fee Code	Quantity	Amount	Sub-Total in USD($)
Basic Filing:				
Provisional Application filing fee	2005	1	125	125
Pages:				
Claims:				
Miscellaneous-Filing:				
Petition:				
Patent-Appeals-and-Interference:				
Post-Allowance-and-Post-Issuance:				
Extension-of-Time:				

Description	Fee Code	Quantity	Amount	Sub-Total in USD($)
Miscellaneous:				
			Total in USD ($)	**125**

Electronic Acknowledgement Receipt

EFS ID:	14081124
Application Number:	61718707
International Application Number:	
Confirmation Number:	7197
Title of Invention:	ZERO-PROFILE EXPANDABLE INTERVERTEBRAL SPACER DEVICES FOR DISTRACTION AND SPINAL FUSION AND A UNIVERSAL TOOL FOR THEIR PLACEMENT AND EXPANSION
First Named Inventor/Applicant Name:	Ahmnon D Moskowitz
Customer Number:	87409
Filer:	John Jeremy Dresch
Filer Authorized By:	
Attorney Docket Number:	3003/0105PR09
Receipt Date:	25-OCT-2012
Filing Date:	
Time Stamp:	23:58:07
Application Type:	Provisional

Payment information:

Submitted with Payment	yes
Payment Type	Credit Card
Payment was successfully received in RAM	$125
RAM confirmation Number	7630
Deposit Account	
Authorized User	

File Listing:

Document Number	Document Description	File Name	File Size(Bytes)/ Message Digest	Multi Part /.zip	Pages (if appl.)

Moskowitz Exhibit 2053,
Medtronic v. Moskowitz IPR2026-00216 p. 68

1	Drawings-only black and white line drawings	30030105PR09_Figures_readyforfiling.pdf	1150354 344d00b10753757fe2ad4b6fa4cb583676582b4a	no	36
Warnings:					
Information:					
2	Provisional Cover Sheet (SB16)	30030105PR09_ProvisionalSB.pdf	1523654 8b4ecc9cfa1d3de1391beb0af44983c87553ddec	no	4
Warnings:					
Information:					
3	Specification	30030105PR09_SPEC_PROV_readyforfiling.pdf	158850 b84b5e1d8ab1d435d1579c298130db0168e5975e	no	25
Warnings:					
Information:					
4	Fee Worksheet (SB06)	fee-info.pdf	29937 b8736ce5898239af52bea319f751401e5a2fcf79	no	2
Warnings:					
Information:					
			Total Files Size (in bytes):	2862795	

This Acknowledgement Receipt evidences receipt on the noted date by the USPTO of the indicated documents, characterized by the applicant, and including page counts, where applicable. It serves as evidence of receipt similar to a Post Card, as described in MPEP 503.

<u>New Applications Under 35 U.S.C. 111</u>
If a new application is being filed and the application includes the necessary components for a filing date (see 37 CFR 1.53(b)-(d) and MPEP 506), a Filing Receipt (37 CFR 1.54) will be issued in due course and the date shown on this Acknowledgement Receipt will establish the filing date of the application.

<u>National Stage of an International Application under 35 U.S.C. 371</u>
If a timely submission to enter the national stage of an international application is compliant with the conditions of 35 U.S.C. 371 and other applicable requirements a Form PCT/DO/EO/903 indicating acceptance of the application as a national stage submission under 35 U.S.C. 371 will be issued in addition to the Filing Receipt, in due course.

<u>New International Application Filed with the USPTO as a Receiving Office</u>
If a new international application is being filed and the international application includes the necessary components for an international filing date (see PCT Article 11 and MPEP 1810), a Notification of the International Application Number and of the International Filing Date (Form PCT/RO/105) will be issued in due course, subject to prescriptions concerning national security, and the date shown on this Acknowledgement Receipt will establish the international filing date of the application.

UNITED STATES PATENT AND TRADEMARK OFFICE

UNITED STATES DEPARTMENT OF COMMERCE
United States Patent and Trademark Office
Address: COMMISSIONER FOR PATENTS
P.O. Box 1450
Alexandria, Virginia 22313-1450
www.uspto.gov

APPLICATION NUMBER	FILING or 371(c) DATE	GRP ART UNIT	FIL FEE REC'D	ATTY.DOCKET.NO	TOT CLAIMS	IND CLAIMS
61/718,707	10/25/2012		125	3003/0105PR09		

CONFIRMATION NO. 7197

FILING RECEIPT

87409
Dresch IP Law, PLLC
P.O. Box 650903
Potomac Falls, VA 20165

OC000000057764839

Date Mailed: 11/28/2012

Receipt is acknowledged of this provisional patent application. It will not be examined for patentability and will become abandoned not later than twelve months after its filing date. Any correspondence concerning the application must include the following identification information: the U.S. APPLICATION NUMBER, FILING DATE, NAME OF APPLICANT, and TITLE OF INVENTION. Fees transmitted by check or draft are subject to collection. Please verify the accuracy of the data presented on this receipt. **If an error is noted on this Filing Receipt, please submit a written request for a Filing Receipt Correction. Please provide a copy of this Filing Receipt with the changes noted thereon. If you received a "Notice to File Missing Parts" for this application, please submit any corrections to this Filing Receipt with your reply to the Notice. When the USPTO processes the reply to the Notice, the USPTO will generate another Filing Receipt incorporating the requested corrections**

Inventor(s)

Ahmnon D. Moskowitz, Rockville, MD;
Mosheh T. Moskowitz, Rockville, MD;
Pablo A. Valdivia Y Alvarado, Cambridge, MA;
Eric Sugalski, Boston, MA;
Nathan C. Moskowitz, Rockville, MD;

Applicant(s)

Ahmnon D. Moskowitz, Rockville, MD;
Mosheh T. Moskowitz, Rockville, MD;
Pablo A. Valdivia Y Alvarado, Cambridge, MA;
Eric Sugalski, Boston, MA;
Nathan C. Moskowitz, Rockville, MD;

Power of Attorney:
John Dresch--46672

If Required, Foreign Filing License Granted: 11/23/2012

The country code and number of your priority application, to be used for filing abroad under the Paris Convention, is **US 61/718,707**

Projected Publication Date: None, application is not eligible for pre-grant publication

Non-Publication Request: No

Early Publication Request: No
**** SMALL ENTITY ****

Moskowitz Exhibit 2053,
Medtronic v. Moskowitz IPR2026-00216 p. 70

MOSKOWITZ-00083227

Title

ZERO-PROFILE EXPANDABLE INTERVERTEBRAL SPACER DEVICES FOR DISTRACTION AND SPINAL FUSION AND A UNIVERSAL TOOL FOR THEIR PLACEMENT AND EXPANSION

PROTECTING YOUR INVENTION OUTSIDE THE UNITED STATES

Since the rights granted by a U.S. patent extend only throughout the territory of the United States and have no effect in a foreign country, an inventor who wishes patent protection in another country must apply for a patent in a specific country or in regional patent offices. Applicants may wish to consider the filing of an international application under the Patent Cooperation Treaty (PCT). An international (PCT) application generally has the same effect as a regular national patent application in each PCT-member country. The PCT process **simplifies** the filing of patent applications on the same invention in member countries, but **does not result** in a grant of "an international patent" and does not eliminate the need of applicants to file additional documents and fees in countries where patent protection is desired.

Almost every country has its own patent law, and a person desiring a patent in a particular country must make an application for patent in that country in accordance with its particular laws. Since the laws of many countries differ in various respects from the patent law of the United States, applicants are advised to seek guidance from specific foreign countries to ensure that patent rights are not lost prematurely.

Applicants also are advised that in the case of inventions made in the United States, the Director of the USPTO must issue a license before applicants can apply for a patent in a foreign country. The filing of a U.S. patent application serves as a request for a foreign filing license. The application's filing receipt contains further information and guidance as to the status of applicant's license for foreign filing.

Applicants may wish to consult the USPTO booklet, "General Information Concerning Patents" (specifically, the section entitled "Treaties and Foreign Patents") for more information on timeframes and deadlines for filing foreign patent applications. The guide is available either by contacting the USPTO Contact Center at 800-786-9199, or it can be viewed on the USPTO website at http://www.uspto.gov/web/offices/pac/doc/general/index.html.

For information on preventing theft of your intellectual property (patents, trademarks and copyrights), you may wish to consult the U.S. Government website, http://www.stopfakes.gov. Part of a Department of Commerce initiative, this website includes self-help "toolkits" giving innovators guidance on how to protect intellectual property in specific countries such as China, Korea and Mexico. For questions regarding patent enforcement issues, applicants may call the U.S. Government hotline at 1-866-999-HALT (1-866-999-4158).

LICENSE FOR FOREIGN FILING UNDER

Title 35, United States Code, Section 184

Title 37, Code of Federal Regulations, 5.11 & 5.15

GRANTED

The applicant has been granted a license under 35 U.S.C. 184, if the phrase "IF REQUIRED, FOREIGN FILING LICENSE GRANTED" followed by a date appears on this form. Such licenses are issued in all applications where the conditions for issuance of a license have been met, regardless of whether or not a license may be required as set forth in 37 CFR 5.15. The scope and limitations of this license are set forth in 37 CFR 5.15(a) unless an earlier license has been issued under 37 CFR 5.15(b). The license is subject to revocation upon written notification. The

Moskowitz Exhibit 2053,
Medtronic v. Moskowitz IPR2026-00216 p. 71

MOSKOWITZ-00083228

date indicated is the effective date of the license, unless an earlier license of similar scope has been granted under 37 CFR 5.13 or 5.14.

This license is to be retained by the licensee and may be used at any time on or after the effective date thereof unless it is revoked. This license is automatically transferred to any related applications(s) filed under 37 CFR 1.53(d). This license is not retroactive.

The grant of a license does not in any way lessen the responsibility of a licensee for the security of the subject matter as imposed by any Government contract or the provisions of existing laws relating to espionage and the national security or the export of technical data. Licensees should apprise themselves of current regulations especially with respect to certain countries, of other agencies, particularly the Office of Defense Trade Controls, Department of State (with respect to Arms, Munitions and Implements of War (22 CFR 121-128)); the Bureau of Industry and Security, Department of Commerce (15 CFR parts 730-774); the Office of Foreign AssetsControl, Department of Treasury (31 CFR Parts 500+) and the Department of Energy.

NOT GRANTED

No license under 35 U.S.C. 184 has been granted at this time, if the phrase "IF REQUIRED, FOREIGN FILING LICENSE GRANTED" DOES NOT appear on this form. Applicant may still petition for a license under 37 CFR 5.12, if a license is desired before the expiration of 6 months from the filing date of the application. If 6 months has lapsed from the filing date of this application and the licensee has not received any indication of a secrecy order under 35 U.S.C. 181, the licensee may foreign file the application pursuant to 37 CFR 5.15(b).

SelectUSA

The United States represents the largest, most dynamic marketplace in the world and is an unparalleled location for business investment, innovation and commercialization of new technologies. The USA offers tremendous resources and advantages for those who invest and manufacture goods here. Through SelectUSA, our nation works to encourage, facilitate, and accelerate business investment. To learn more about why the USA is the best country in the world to develop technology, manufacture products, and grow your business, visit SelectUSA.gov.