FISH.
FISH & RICHARDSON

Street Address
Fish & Richardson P.C.
3200 RBC Plaza
60 South Sixth Street
Minneapolis, MN 55402

Mail Address
P.O. Box 1022
Minneapolis, MN 55440-1022

612 335 5070 main
877 769 7945 fax

November 21, 2017

Attorney Docket No.: 45335-0020002

Commissioner for Patents
P.O. Box 1450
Alexandria, VA 22313-1450

Presented for filing is a new continuation patent application for prioritized examination of:

Inventor(s): AHMNON D. MOSKOWITZ, MOSHEH T. MOSKOWITZ, PABLO A. VALDIVIA Y. ALVARADO, ERIC SUGALSKI AND NATHAN C. MOSKOWITZ

Title: ZERO-PROFILE EXPANDABLE INTERVERTEBRAL SPACER DEVICES FOR DISTRACTION AND SPINAL FUSION AND A UNIVERSAL TOOL FOR THEIR PLACEMENT AND EXPANSION

Enclosed are the following papers, including those required to receive a filing date under 37 CFR 1.53(b):

	Pages
Specification	29
Claims	1
Abstract	1
Declaration	5
Drawing(s)	38

Enclosures:

— Application Data Sheet, 11 pages.
— Power of Attorney, 2 pages.
— Certification and Request for Prioritized Examination (Track I), 2 pages.

The applicant claims small entity status under 37 CFR 1.27.

Basic Filing Fee $70

FISH.
FISH & RICHARDSON

Commissioner for Patents
November 21, 2017

Search Fee			$300
Examination Fee			$360
Publication fee			$0
Track I processing fee			$70
Track I prioritized examination fee			$2000
Total Claims 1	over 20	**0 x $40**	$0
Independent Claims 1	over 3	**0 x $210**	$0
Fee for Multiple Dependent claims			$0
Application size fee for each 50 pages over 100 Total Sheets: 69x .75 - 100/50 = 0x			$0
Total Filing fee			$2800

The total filing fee is being paid concurrently on the Electronic Filing System (EFS) by deposit account authorization. Apply any other required fees or any credits to Deposit Account No. 06-1050, referencing the attorney docket number shown above.

I hereby authorize the USPTO to communicate in response to email communications from the undersigned and practitioners under Customer No. 26191 in accordance with 37 CFR 1.33 and 37 CFR 1.34 concerning any subject matter of this application via email. I understand that a copy of these communications will be made of record in the application file. (MPEP 502.03).

If this application is considered to be incomplete, or if a telephone conference would otherwise be helpful, call the undersigned at (612) 337-2538.

Send all correspondence to:

26191
Customer Number

Respectfully submitted,

/Stuart A. Nelson/

Stuart A. Nelson

FISH.
FISH & RICHARDSON

Commissioner for Patents
November 21, 2017

Registration No. 63,947
Enclosures
SWN/aur
61596877.doc

Under the Paperwork Reduction Act of 1995, no persons are required to respond to a collection of information unless it contains a valid OMB control number.

Application Data Sheet 37 CFR 1.76	Attorney Docket Number	45335-0020002
	Application Number	
Title of Invention	ZERO-PROFILE EXPANDABLE INTERVERTEBRAL SPACER DEVICES FOR DISTRACTION AND SPINAL FUSION AND A UNIVERSAL TOOL FOR THEIR PLACEMENT AND EXPANSION	

The application data sheet is part of the provisional or nonprovisional application for which it is being submitted. The following form contains the bibliographic data arranged in a format specified by the United States Patent and Trademark Office as outlined in 37 CFR 1.76.
This document may be completed electronically and submitted to the Office in electronic format using the Electronic Filing System (EFS) or the document may be printed and included in a paper filed application.

Secrecy Order 37 CFR 5.2:

☐ Portions or all of the application associated with this Application Data Sheet may fall under a Secrecy Order pursuant to 37 CFR 5.2 (Paper filers only. Applications that fall under Secrecy Order may not be filed electronically.)

Inventor Information:

Inventor 1 Remove

Legal Name

Prefix	Given Name	Middle Name	Family Name	Suffix
	Ahmnon	D.	Moskowitz	

Residence Information (Select One) ● US Residency Non US Residency Active US Military Service

City	Rockville	State/Province	MD	Country of Residence i	US

Mailing Address of Inventor:

Address 1	212 North Adams St.
Address 2	
City	Rockville
State/Province	MD
Postal Code	20850
Country i	US

Inventor 2 Remove

Legal Name

Prefix	Given Name	Middle Name	Family Name	Suffix
	Mosheh	T.	Moskowitz	

Residence Information (Select One) ◉ US Residency Non US Residency Active US Military Service

City	Rockville	State/Province	MD	Country of Residence i	US

Mailing Address of Inventor:

Address 1	212 North Adams St.
Address 2	
City	Rockville
State/Province	MD
Postal Code	20850
Country i	US

Inventor 3 Remove

Legal Name

Prefix	Given Name	Middle Name	Family Name	Suffix
	Pablo	A. Valdivia Y.	Alvarado	

Residence Information (Select One) ◉ US Residency Non US Residency Active US Military Service

Under the Paperwork Reduction Act of 1995, no persons are required to respond to a collection of information unless it contains a valid OMB control number.

Application Data Sheet 37 CFR 1.76	Attorney Docket Number	45335-0020002
	Application Number	
Title of Invention	ZERO-PROFILE EXPANDABLE INTERVERTEBRAL SPACER DEVICES FOR DISTRACTION AND SPINAL FUSION AND A UNIVERSAL TOOL FOR THEIR PLACEMENT AND EXPANSION	

City	Cambridge	State/Province	MA	Country of Residence i	US

Mailing Address of Inventor:

Address 1	13 Lancaster St. #2		
Address 2			
City	Cambridge	State/Province	MA
Postal Code	02139	Country i	US

Inventor 4 Remove

Legal Name

Prefix	Given Name	Middle Name	Family Name	Suffix
	Eric		Sugalski	

Residence Information (Select One) ◉ US Residency Non US Residency Active US Military Service

City	Arlington	State/Province	MA	Country of Residence i	US

Mailing Address of Inventor:

Address 1	128 Blossom Street		
Address 2			
City	Arlington	State/Province	MA
Postal Code	02474	Country i	US

Inventor 5 Remove

Legal Name

Prefix	Given Name	Middle Name	Family Name	Suffix
	Nathan	C.	Moskowitz	

Residence Information (Select One) ◉ US Residency Non US Residency Active US Military Service

City	Rockville	State/Province	MD	Country of Residence i	US

Mailing Address of Inventor:

Address 1	212 North Adams Street		
Address 2			
City	Rockville	State/Province	MD
Postal Code	20850	Country i	US

All Inventors Must Be Listed - Additional Inventor Information blocks may be generated within this form by selecting the **Add** button. Add

Correspondence Information:

Enter either Customer Number or complete the Correspondence Information section below.
For further information see 37 CFR 1.33(a).

☐ **An Address is being provided for the correspondence Information of this application.**

PTO/AIA/14 (11-15)
Approved for use through 04/30/2017. OMB 0651-0032
U.S. Patent and Trademark Office; U.S. DEPARTMENT OF COMMERCE
Under the Paperwork Reduction Act of 1995, no persons are required to respond to a collection of information unless it contains a valid OMB control number.

Application Data Sheet 37 CFR 1.76	Attorney Docket Number	45335-0020002
	Application Number	
Title of Invention	ZERO-PROFILE EXPANDABLE INTERVERTEBRAL SPACER DEVICES FOR DISTRACTION AND SPINAL FUSION AND A UNIVERSAL TOOL FOR THEIR PLACEMENT AND EXPANSION	

Customer Number	26191		
Email Address	apsi@fr.com	Add Email	Remove Email

Application Information:

Title of the Invention	ZERO-PROFILE EXPANDABLE INTERVERTEBRAL SPACER DEVICES FOR DISTRACTION AND SPINAL FUSION AND A UNIVERSAL TOOL FOR THEIR PLACEMENT AND EXPANSION		
Attorney Docket Number	45335-0020002	**Small Entity Status Claimed** ☒	
Application Type	Nonprovisional		
Subject Matter	Utility		
Total Number of Drawing Sheets (if any)	38	**Suggested Figure for Publication (if any)**	

Filing By Reference:

Only complete this section when filing an application by reference under 35 U.S.C. 111(c) and 37 CFR 1.57(a). Do not complete this section if application papers including a specification and any drawings are being filed. Any domestic benefit or foreign priority information must be provided in the appropriate section(s) below (i.e., "Domestic Benefit/National Stage Information" and "Foreign Priority Information").

For the purposes of a filing date under 37 CFR 1.53(b), the description and any drawings of the present application are replaced by this reference to the previously filed application, subject to conditions and requirements of 37 CFR 1.57(a).

Application number of the previously filed application	Filing date (YYYY-MM-DD)	Intellectual Property Authority or Country

Publication Information:

☐ Request Early Publication (Fee required at time of Request 37 CFR 1.219)

☐ **Request Not to Publish.** I hereby request that the attached application not be published under 35 U.S.C. 122(b) and certify that the invention disclosed in the attached application **has not and will not** be the subject of an application filed in another country, or under a multilateral international agreement, that requires publication at eighteen months after filing.

Representative Information:

Representative information should be provided for all practitioners having a power of attorney in the application. Providing this information in the Application Data Sheet does not constitute a power of attorney in the application (see 37 CFR 1.32).
Either enter Customer Number or complete the Representative Name section below. If both sections are completed the customer Number will be used for the Representative Information during processing.

Please Select One:	● Customer Number	US Patent Practitioner	○ Limited Recognition (37 CFR 11.9)
Customer Number	26191		

Under the Paperwork Reduction Act of 1995, no persons are required to respond to a collection of information unless it contains a valid OMB control number.

Application Data Sheet 37 CFR 1.76	Attorney Docket Number	45335-0020002
	Application Number	
Title of Invention	ZERO-PROFILE EXPANDABLE INTERVERTEBRAL SPACER DEVICES FOR DISTRACTION AND SPINAL FUSION AND A UNIVERSAL TOOL FOR THEIR PLACEMENT AND EXPANSION	

Domestic Benefit/National Stage Information:

This section allows for the applicant to either claim benefit under 35 U.S.C. 119(e), 120, 121, 365(c), or 386(c) or indicate National Stage entry from a PCT application. Providing benefit claim information in the Application Data Sheet constitutes the specific reference required by 35 U.S.C. 119(e) or 120, and 37 CFR 1.78.
When referring to the current application, please leave the "Application Number" field blank.

Prior Application Status	Pending		Remove
Application Number	Continuity Type	Prior Application Number	Filing or 371(c) Date (YYYY-MM-DD)
	Continuation of	14063197	2013-10-25
Prior Application Status	Pending		Remove
Application Number	Continuity Type	Prior Application Number	Filing or 371(c) Date (YYYY-MM-DD)
14063197	Continuation in part of	13210150	2011-08-15
Prior Application Status	Pending		Remove
Application Number	Continuity Type	Prior Application Number	Filing or 371(c) Date (YYYY-MM-DD)
14063197	Continuation in part of	13210157	2011-08-15
Prior Application Status	Pending		Remove
Application Number	Continuity Type	Prior Application Number	Filing or 371(c) Date (YYYY-MM-DD)
14063197	Continuation in part of	13210162	2011-08-15
Prior Application Status	Pending		Remove
Application Number	Continuity Type	Prior Application Number	Filing or 371(c) Date (YYYY-MM-DD)
14063197	Continuation in part of	13210168	2011-08-15

Prior Application Status	Patented				Remove
Application Number	Continuity Type	Prior Application Number	Filing Date (YYYY-MM-DD)	Patent Number	Issue Date (YYYY-MM-DD)
14063197	Continuation in part of	13741361	2013-01-14	9301854	2016-04-05
Prior Application Status	Patented				Remove
Application Number	Continuity Type	Prior Application Number	Filing Date (YYYY-MM-DD)	Patent Number	Issue Date (YYYY-MM-DD)
13210150	Continuation of	13084543	2011-04-11	8353913	2013-01-15
Prior Application Status	Patented				Remove
Application Number	Continuity Type	Prior Application Number	Filing Date (YYYY-MM-DD)	Patent Number	Issue Date (YYYY-MM-DD)
13084543	Division of	11842855	2007-08-21	7942903	2011-05-17

Under the Paperwork Reduction Act of 1995, no persons are required to respond to a collection of information unless it contains a valid OMB control number.

Application Data Sheet 37 CFR 1.76	Attorney Docket Number	45335-0020002
	Application Number	
Title of Invention	ZERO-PROFILE EXPANDABLE INTERVERTEBRAL SPACER DEVICES FOR DISTRACTION AND SPINAL FUSION AND A UNIVERSAL TOOL FOR THEIR PLACEMENT AND EXPANSION	

Prior Application Status	Patented				Remove
Application Number	Continuity Type	Prior Application Number	Filing Date (YYYY-MM-DD)	Patent Number	Issue Date (YYYY-MM-DD)
13084543	Continuation of	13108982	2011-05-16	9005293	2015-04-14
Prior Application Status	Patented				Remove
Application Number	Continuity Type	Prior Application Number	Filing Date (YYYY-MM-DD)	Patent Number	Issue Date (YYYY-MM-DD)
13108982	Continuation of	11842855	2007-08-21	7942903	2011-05-17
Prior Application Status	Patented				Remove
Application Number	Continuity Type	Prior Application Number	Filing Date (YYYY-MM-DD)	Patent Number	Issue Date (YYYY-MM-DD)
11842855	Continuation in part of	11536815	2006-09-29	7846188	2010-12-07
Prior Application Status	Patented				Remove
Application Number	Continuity Type	Prior Application Number	Filing Date (YYYY-MM-DD)	Patent Number	Issue Date (YYYY-MM-DD)
11536815	Continuation in part of	11208644	2005-08-23	7704279	2010-04-27
Prior Application Status	Expired				Remove
Application Number	Continuity Type	Prior Application Number	Filing or 371(c) Date (YYYY-MM-DD)		
11208644	Claims benefit of provisional	60670231	2005-04-12		
Prior Application Status	Patented				Remove
Application Number	Continuity Type	Prior Application Number	Filing Date (YYYY-MM-DD)	Patent Number	Issue Date (YYYY-MM-DD)
13210157	Continuation of	13084543	2011-04-11	8353913	2013-01-15
Prior Application Status	Patented				Remove
Application Number	Continuity Type	Prior Application Number	Filing Date (YYYY-MM-DD)	Patent Number	Issue Date (YYYY-MM-DD)
13210162	Continuation of	13084543	2011-04-11	8353913	2013-01-15
Prior Application Status	Patented				Remove
Application Number	Continuity Type	Prior Application Number	Filing Date (YYYY-MM-DD)	Patent Number	Issue Date (YYYY-MM-DD)
13210168	Continuation of	13084543	2011-04-11	8353913	2013-01-15
Prior Application Status	Patented				Remove
Application Number	Continuity Type	Prior Application Number	Filing Date (YYYY-MM-DD)	Patent Number	Issue Date (YYYY-MM-DD)
13741361	Continuation of	13084543	2011-04-11	8353913	2013-01-15
Prior Application Status	Expired				Remove
Application Number	Continuity Type	Prior Application Number	Filing or 371(c) Date (YYYY-MM-DD)		
14063197	Claims benefit of provisional	61801783	2013-03-15		

Application Data Sheet 37 CFR 1.76	Attorney Docket Number	45335-0020002
	Application Number	
Title of Invention	ZERO-PROFILE EXPANDABLE INTERVERTEBRAL SPACER DEVICES FOR DISTRACTION AND SPINAL FUSION AND A UNIVERSAL TOOL FOR THEIR PLACEMENT AND EXPANSION	

Prior Application Status	Expired		Remove
Application Number	Continuity Type	Prior Application Number	Filing or 371(c) Date (YYYY-MM-DD)
14063197	Claims benefit of provisional	61718707	2012-10-25
Additional Domestic Benefit/National Stage Data may be generated within this form by selecting the **Add** button.			Add

Foreign Priority Information:

This section allows for the applicant to claim priority to a foreign application. Providing this information in the application data sheet constitutes the claim for priority as required by 35 U.S.C. 119(b) and 37 CFR 1.55. When priority is claimed to a foreign application that is eligible for retrieval under the priority document exchange program (PDX)[i] the information will be used by the Office to automatically attempt retrieval pursuant to 37 CFR 1.55(i)(1) and (2). Under the PDX program, applicant bears the ultimate responsibility for ensuring that a copy of the foreign application is received by the Office from the participating foreign intellectual property office, or a certified copy of the foreign priority application is filed, within the time period specified in 37 CFR 1.55(g)(1).

			Remove
Application Number	Country[i]	Filing Date (YYYY-MM-DD)	Access Code[i] (if applicable)
Additional Foreign Priority Data may be generated within this form by selecting the **Add** button.			Add

Statement under 37 CFR 1.55 or 1.78 for AIA (First Inventor to File) Transition Applications

☐ This application (1) claims priority to or the benefit of an application filed before March 16, 2013 and (2) also contains, or contained at any time, a claim to a claimed invention that has an effective filing date on or after March 16, 2013.
NOTE: By providing this statement under 37 CFR 1.55 or 1.78, this application, with a filing date on or after March 16, 2013, will be examined under the first inventor to file provisions of the AIA.

Application Data Sheet 37 CFR 1.76	Attorney Docket Number	45335-0020002
	Application Number	
Title of Invention	ZERO-PROFILE EXPANDABLE INTERVERTEBRAL SPACER DEVICES FOR DISTRACTION AND SPINAL FUSION AND A UNIVERSAL TOOL FOR THEIR PLACEMENT AND EXPANSION	

Authorization or Opt-Out of Authorization to Permit Access:

When this Application Data Sheet is properly signed and filed with the application, applicant has provided written authority to permit a participating foreign intellectual property (IP) office access to the instant application-as-filed (see paragraph A in subsection 1 below) and the European Patent Office (EPO) access to any search results from the instant application (see paragraph B in subsection 1 below).

Should applicant choose not to provide an authorization identified in subsection 1 below, applicant **must opt-out** of the authorization by checking the corresponding box A or B or both in subsection 2 below.

NOTE: This section of the Application Data Sheet is **ONLY** reviewed and processed with the **INITIAL** filing of an application. After the initial filing of an application, an Application Data Sheet cannot be used to provide or rescind authorization for access by a foreign IP office(s). Instead, Form PTO/SB/39 or PTO/SB/69 must be used as appropriate.

1. Authorization to Permit Access by a Foreign Intellectual Property Office(s)

A. Priority Document Exchange (PDX) - Unless box A in subsection 2 (opt-out of authorization) is checked, the undersigned hereby **grants the USPTO authority** to provide the European Patent Office (EPO), the Japan Patent Office (JPO), the Korean Intellectual Property Office (KIPO), the State Intellectual Property Office of the People's Republic of China (SIPO), the World Intellectual Property Organization (WIPO), and any other foreign intellectual property office participating with the USPTO in a bilateral or multilateral priority document exchange agreement in which a foreign application claiming priority to the instant patent application is filed, access to: (1) the instant patent application-as-filed and its related bibliographic data, (2) any foreign or domestic application to which priority or benefit is claimed by the instant application and its related bibliographic data, and (3) the date of filing of this Authorization. See 37 CFR 1.14(h)(1).

B. Search Results from U.S. Application to EPO - Unless box B in subsection 2 (opt-out of authorization) is checked, the undersigned hereby **grants the USPTO authority** to provide the EPO access to the bibliographic data and search results from the instant patent application when a European patent application claiming priority to the instant patent application is filed. See 37 CFR 1.14(h)(2).

The applicant is reminded that the EPO's Rule 141(1) EPC (European Patent Convention) requires applicants to submit a copy of search results from the instant application without delay in a European patent application that claims priority to the instant application.

2. Opt-Out of Authorizations to Permit Access by a Foreign Intellectual Property Office(s)

☐ A. Applicant **DOES NOT** authorize the USPTO to permit a participating foreign IP office access to the instant application-as-filed. If this box is checked, the USPTO will not be providing a participating foreign IP office with any documents and information identified in subsection 1A above.

☐ B. Applicant **DOES NOT** authorize the USPTO to transmit to the EPO any search results from the instant patent application. If this box is checked, the USPTO will not be providing the EPO with search results from the instant application.

NOTE: Once the application has published or is otherwise publicly available, the USPTO may provide access to the application in accordance with 37 CFR 1.14.

Under the Paperwork Reduction Act of 1995, no persons are required to respond to a collection of information unless it contains a valid OMB control number.

Application Data Sheet 37 CFR 1.76	Attorney Docket Number	45335-0020002
	Application Number	
Title of Invention	ZERO-PROFILE EXPANDABLE INTERVERTEBRAL SPACER DEVICES FOR DISTRACTION AND SPINAL FUSION AND A UNIVERSAL TOOL FOR THEIR PLACEMENT AND EXPANSION	

Applicant Information:

Providing assignment information in this section does not substitute for compliance with any requirement of part 3 of Title 37 of CFR to have an assignment recorded by the Office.

Applicant 1 Remove

If the applicant is the inventor (or the remaining joint inventor or inventors under 37 CFR 1.45), this section should not be completed. The information to be provided in this section is the name and address of the legal representative who is the applicant under 37 CFR 1.43; or the name and address of the assignee, person to whom the inventor is under an obligation to assign the invention, or person who otherwise shows sufficient proprietary interest in the matter who is the applicant under 37 CFR 1.46. If the applicant is an applicant under 37 CFR 1.46 (assignee, person to whom the inventor is obligated to assign, or person who otherwise shows sufficient proprietary interest) together with one or more joint inventors, then the joint inventor or inventors who are also the applicant should be identified in this section. Clear

● Assignee	Legal Representative under 35 U.S.C. 117	Joint Inventor
Person to whom the inventor is obligated to assign.	Person who shows sufficient proprietary interest	

If applicant is the legal representative, indicate the authority to file the patent application, the inventor is:

Name of the Deceased or Legally Incapacitated Inventor:

If the Applicant is an Organization check here. ☐

Prefix	Given Name	Middle Name	Family Name	Suffix
	Nathan	C.	Moskowitz	

Mailing Address Information For Applicant:

Address 1	212 North Adams Street		
Address 2			
City	Rockville	**State/Province**	MD
Country	US	Postal Code	20850
Phone Number		Fax Number	
Email Address			

Additional Applicant Data may be generated within this form by selecting the Add button. Add

Assignee Information including Non-Applicant Assignee Information:

Providing assignment information in this section does not substitute for compliance with any requirement of part 3 of Title 37 of CFR to have an assignment recorded by the Office.

Under the Paperwork Reduction Act of 1995, no persons are required to respond to a collection of information unless it contains a valid OMB control number.

Application Data Sheet 37 CFR 1.76	Attorney Docket Number	45335-0020002
	Application Number	
Title of Invention	ZERO-PROFILE EXPANDABLE INTERVERTEBRAL SPACER DEVICES FOR DISTRACTION AND SPINAL FUSION AND A UNIVERSAL TOOL FOR THEIR PLACEMENT AND EXPANSION	

Assignee 1

Complete this section if assignee information, including non-applicant assignee information, is desired to be included on the patent application publication. An assignee-applicant identified in the "Applicant Information" section will appear on the patent application publication as an applicant. For an assignee-applicant, complete this section only if identification as an assignee is also desired on the patent application publication.

Remove

If the Assignee or Non-Applicant Assignee is an Organization check here. ☐

Prefix	**Given Name**	Middle Name	**Family Name**	Suffix

Mailing Address Information For Assignee including Non-Applicant Assignee:

Address 1			
Address 2			
City		**State/Province**	
Country i		Postal Code	
Phone Number		Fax Number	
Email Address			

Additional Assignee or Non-Applicant Assignee Data may be generated within this form by selecting the Add button. Add

Signature:

Remove

NOTE: This Application Data Sheet must be signed in accordance with 37 CFR 1.33(b). **However, if this Application Data Sheet is submitted with the INITIAL filing of the application and either box A or B is not checked in subsection 2 of the "Authorization or Opt-Out of Authorization to Permit Access" section, then this form must also be signed in accordance with 37 CFR 1.14(c).**

This Application Data Sheet **must** be signed by a patent practitioner if one or more of the applicants is a **juristic entity** (e.g., corporation or association). If the applicant is two or more joint inventors, this form must be signed by a patent practitioner, **all** joint inventors who are the applicant, or one or more joint inventor-applicants who have been given power of attorney (e.g., see USPTO Form PTO/AIA/81) on behalf of **all** joint inventor-applicants.

See 37 CFR 1.4(d) for the manner of making signatures and certifications.

Signature	/Stuart A. Nelson/			Date (YYYY-MM-DD)	2017-11-21
First Name	Stuart A.	Last Name	Nelson	Registration Number	63,947

Additional Signature may be generated within this form by selecting the Add button. Add

Application Data Sheet 37 CFR 1.76	Attorney Docket Number	45335-0020002
	Application Number	
Title of Invention	ZERO-PROFILE EXPANDABLE INTERVERTEBRAL SPACER DEVICES FOR DISTRACTION AND SPINAL FUSION AND A UNIVERSAL TOOL FOR THEIR PLACEMENT AND EXPANSION	

This collection of information is required by 37 CFR 1.76. The information is required to obtain or retain a benefit by the public which is to file (and by the USPTO to process) an application. Confidentiality is governed by 35 U.S.C. 122 and 37 CFR 1.14. This collection is estimated to take 23 minutes to complete, including gathering, preparing, and submitting the completed application data sheet form to the USPTO. Time will vary depending upon the individual case. Any comments on the amount of time you require to complete this form and/or suggestions for reducing this burden, should be sent to the Chief Information Officer, U.S. Patent and Trademark Office, U.S. Department of Commerce, P.O. Box 1450, Alexandria, VA 22313-1450. DO NOT SEND FEES OR COMPLETED FORMS TO THIS ADDRESS. **SEND TO: Commissioner for Patents, P.O. Box 1450, Alexandria, VA 22313-1450.**

Privacy Act Statement

The Privacy Act of 1974 (P.L. 93-579) requires that you be given certain information in connection with your submission of the attached form related to a patent application or patent. Accordingly, pursuant to the requirements of the Act, please be advised that: (1) the general authority for the collection of this information is 35 U.S.C. 2(b)(2); (2) furnishing of the information solicited is voluntary; and (3) the principal purpose for which the information is used by the U.S. Patent and Trademark Office is to process and/or examine your submission related to a patent application or patent. If you do not furnish the requested information, the U.S. Patent and Trademark Office may not be able to process and/or examine your submission, which may result in termination of proceedings or abandonment of the application or expiration of the patent.

The information provided by you in this form will be subject to the following routine uses:

1 The information on this form will be treated confidentially to the extent allowed under the Freedom of Information Act (5 U.S.C. 552) and the Privacy Act (5 U.S.C. 552a). Records from this system of records may be disclosed to the Department of Justice to determine whether the Freedom of Information Act requires disclosure of these records.

2. A record from this system of records may be disclosed, as a routine use, in the course of presenting evidence to a court, magistrate, or administrative tribunal, including disclosures to opposing counsel in the course of settlement negotiations.

3 A record in this system of records may be disclosed, as a routine use, to a Member of Congress submitting a request involving an individual, to whom the record pertains, when the individual has requested assistance from the Member with respect to the subject matter of the record.

4. A record in this system of records may be disclosed, as a routine use, to a contractor of the Agency having need for the information in order to perform a contract. Recipients of information shall be required to comply with the requirements of the Privacy Act of 1974, as amended, pursuant to 5 U.S.C. 552a(m).

5. A record related to an International Application filed under the Patent Cooperation Treaty in this system of records may be disclosed, as a routine use, to the International Bureau of the World Intellectual Property Organization, pursuant to the Patent CooperationTreaty.

6. A record in this system of records may be disclosed, as a routine use, to another federal agency for purposes of National Security review (35 U.S.C. 181) and for review pursuant to the Atomic Energy Act (42 U.S.C. 218(c)).

7. A record from this system of records may be disclosed, as a routine use, to the Administrator, General Services, or his/her designee, during an inspection of records conducted by GSA as part of that agency's responsibility to recommend improvements in records management practices and programs, under authority of 44 U.S.C. 2904 and 2906. Such disclosure shall be made in accordance with the GSA regulations governing inspection of records for this purpose, and any other relevant (i.e., GSA or Commerce) directive. Such disclosure shall not be used to make determinations about individuals.

8. A record from this system of records may be disclosed, as a routine use, to the public after either publication of the application pursuant to 35 U.S.C. 122(b) or issuance of a patent pursuant to 35 U.S.C. 151. Further, a record may be disclosed, subject to the limitations of 37 CFR 1.14, as a routine use, to the public if the record was filed in an application which became abandoned or in which the proceedings were terminated and which application is referenced by either a published application, an application open to public inspections or an issued patent.

9. A record from this system of records may be disclosed, as a routine use, to a Federal, State, or local law enforcement agency, if the USPTO becomes aware of a violation or potential violation of law or regulation.

TRANSMITTAL FOR POWER OF ATTORNEY TO ONE OR MORE REGISTERED PRACTITIONERS

Application Number	To Be Assigned
Filing Date	Herewith
First Named Inventor	Ahmnon D. Moskowitz
Title	ZERO-PROFILE EXPANDABLE INTERVERTEBRAL SPACER DEVICES FOR DISTRACTION AND SPINAL FUSION AND A UNIVERSAL TOOL FOR THEIR PLACEMENT AND EXPANSION
Art Unit	Unknown
Examiner Name	Unknown
Attorney Docket Number	45335-0020002

SIGNATURE of Applicant or Patent Practitioner

Signature	/Stuart A. Nelson/	Date (Optional)	11/21/2017
Name	Stuart A. Nelson	Registration Number	63,947
Title (if Applicant is a juristic entity)			
Applicant Name (if Applicant is a juristic entity)			

NOTE: This form must be signed in accordance with 37 CFR 1.33. See 37 CFR 1.4(d) for signature requirements and certifications. If more than one applicant, use multiple forms.

☐ *Total of _____ forms are submitted.

61596836.doc

POWER OF ATTORNEY BY APPLICANT

I hereby revoke all previous powers of attorney given in the application identified in either the attached transmittal letter or the boxes below.

Application Number	Filing Date

(Note: The boxes above may be left blank if information is provided on the Transmittal.)

☒ I hereby appoint the Patent Practitioner(s) associated with the following Customer Number as my/our attorney(s) or agent(s), and to transact all business in the United States Patent and Trademark Office connected therewith for the application referenced in the attached transmittal letter, which may be an application filed after the date of this power of attorney, or identified above:

26191

OR

☐ I hereby appoint Practitioner(s) named in the attached list as my/our attorney(s) or agent(s), and to transact all business in the United States Patent and Trademark Office connected therewith for the patent application referenced in the attached transmittal letter, which may be an application filed after the date of this power of attorney, or identified above.

Please recognize or change the correspondence address for the application identified in the attached transmittal letter to:

☐ The address associated with the above-mentioned Customer Number

OR

☒ The address associated with Customer Number: **26191**

OR

Firm or Individual Name					
Address					
City		State		Zip	
Country					
Telephone		Email			

I am the Applicant (if the Applicant is a juristic entity, list the Applicant name in the box):

☐ Inventor or Joint Inventor (title not required below)

☐ Legal Representative of a Deceased or Legally Incapacitated Inventor (title not required below)

☒ Assignee or Person to Whom the Inventor is Under an Obligation to Assign (provide signer's title if applicant is a juristic entity)

☐ Person Who Otherwise Shows Sufficient Proprietary Interest (e.g., a petition under 37 CFR 1.46(b)(2) was granted in the application or is concurrently being filed with this document) (provide signer's title if applicant is a juristic entity)

SIGNATURE of Applicant for Patent

The undersigned (whose title is supplied below) is authorized to act on behalf of the applicant (e.g., where the applicant is a juristic entity).

Signature	Nathan C. Moskowitz	Date (Optional)	2/20/17
Name	Nathan C. Moskowitz		
Title			

NOTE: Signature - This form must be signed by the applicant in accordance with 37 CFR 1.33. See 37 CFR 1.4 for signature requirements and certifications. If more than one applicant, use multiple forms.

☐ *Total of _____ forms are submitted.

61531511.doc

ZERO-PROFILE EXPANDABLE INTERVERTEBRAL SPACER DEVICES FOR DISTRACTION AND SPINAL FUSION AND A UNIVERSAL TOOL FOR THEIR PLACEMENT AND EXPANSION

CROSS-REFERENCE TO RELATED APPLICATIONS

[0001] This application is a Continuation-in-part Application of each of co-pending application Serial No. 13/210,150, filed on August 15, 2011, co-pending application Serial No. 13/210,157, filed on August 15, 2011, co-pending application Serial No. 13/210,162, filed on August 15, 2011, co-pending application Serial No. 13/210,168, filed on August 15, 2011, co-pending application Serial No. 13/741,361, filed on January 14, 2013, each of which is a Continuation Application of application Serial No. 13,084,543, filed on April 11, 2011, now U.S. Patent No. 8,353,913 issued on January 15, 2013, which is a Divisional Application of application Serial No. 11/842,855, filed on August 21, 2007, now U.S. Patent No. 7,942,903 issued on May 17, 2011, and a Continuation Application of application Serial No. 13,108,982, filed on May 16, 2011, which also is a Continuation Application of application Serial No. 11/842,855, filed on August 21, 2007, now U.S. Patent No. 7,942,903 issued on May 17, 2011, which is a Continuation-In-Part Application of application Serial No. 11/536,815, filed on September, 29, 2006, now U.S. Patent No. 7,846,188 issued on December 7, 2010, which is a Continuation-In-Part Application of application Serial No. 11/208,644, filed on August 23, 2005, now U.S. Patent No. 7,704,279 issued on April 27, 2010, for which priority is claimed under 35 U.S.C. §120; and this application also claims priority under 35 U.S.C. § 119(e) of U.S. provisional application No. 61/801,783, filed on March 15,

2013, U.S. provisional application No. 61/718,707, filed on October 25, 2012, and U.S. provisional application No. 60/670,231, filed on April 12, 2005; the entire contents of all the above identified patent applications are hereby incorporated by reference.

[0002] U.S. Patent Application Serial Nos. 13/084,543, filed on April 11, 2011 (Attorney Docket No. 3003/0105PUS2), 11/842,855, filed on August 21, 2007 (Attorney Docket No. 3003/0105PUS1), 11/536,815, filed on September 29, 2006 (Attorney Docket No. 3003/0104PUS2), and 11/208,644, filed on August 23, 2005 (Attorney Docket No. 3003/0104PUS1), each claim the benefit of priority under 35 U.S.C. § 119(e) of U.S. Provisional Application No. 60/670,231, filed on April 12, 2005 (Attorney Docket No. 3003/0102PR01), and this application hereby incorporates the claim of priority to this provisional application under 35 U.S.C. § 119(e) from the aforementioned intermediate applications (for which priority of each intermediate application is claimed under 35 U.S.C. § 120); and the entire contents of all of the above identified patent applications are hereby incorporated by reference in their entirety.

FIELD OF DISCLOSURE

[0003] The present invention relates to unique, universal Zero-Profile Expandable Intervertebral Spacer (ZP-EIS) devices for fusion and distraction throughout the entire spine which can be inserted via anterior, anterolateral, lateral, far lateral or posterior surgical approaches dependent on the need and preference. Multiple ZP-EIS embodiments each with unique mechanisms of calibrated expansion are presented. Two of these embodiments incorporate bi-directional fixating transvertebral (BDFT) screws

and five other embodiments do not incorporate BDFT screws. A universal tool for their intervertebral placement and device expansion is also described.

[0004] The ZP-EIS embodiments with incorporated BDFT screws can be used as stand-alone intervertebral devices. These exemplary embodiments combine the dual functions of intervertebral calibrated expandable distraction, and segmental vertebral body spinal fusion. These embodiments can include bone cavities which can be filled with bone fusion material(s) to promote segmental spinal fusion.

[0005] The calibrated ZP-EIS embodiments without incorporated BDFT screws can also be used as stand-alone devices for calibrated intervertebral expansion and segmental vertebral body fusion. The exemplary devices can include bone cavities which can be filled with bone fusion material. If desirable, the exemplary devices can be supplemented with other forms of screw stabilization.

[0006] The exemplary ZP-EIS embodiments, especially those with incorporated BDFT screws, may obviate the need for supplemental pedicle screw fixation in many situations. The exemplary embodiments allow nuanced, fine-tuned incremental and calibrated distraction of the disc space to allow nerve root decompression in a minimally invasive and safe manner, as well as promoting segmental spinal fusion.

[0007] In the related applications in the Cross-Reference to Related Applications, Applicants first introduced the terminology "zero-profile" relating to spinal fusion devices. Applicants also have described zero-profile non-expandable and expandable stand-alone intervertebral spinal fusion device embodiments with incorporated BDFT screws. As described in greater detail below, exemplary embodiments of advanced ZP-EIS devices with BDFT screws are provided which have an improved contoured body

with tapered edges to more precisely insert into and conform to the biconcave disc space. The present application also provides exemplary embodiments of more advanced ZP-EIS devices without accompanying BDFT screws each with very unique calibrated expandable mechanisms allowing minimally invasive intervertebral expansion, vertebral body distraction and segmental spinal fusion. An exemplary embodiment of a universal tool also is described that can be adapted to implant one or more (e.g., all) of the intervertebral device embodiments herein described into the intervertebral space, and mechanically expand them.

BACKGROUND

[0008] The history and evolution of instrumented spinal fusion in the entire human spine has been reviewed in Applicants' copending applications set forth in the Cross-Reference to Related Applications (for example in U.S. Serial No. 11/536,815, filed on September, 29, 2006, and Serial No. 11/208,644, filed on August 23, 2005). Currently, the majority of spinal fusion techniques are typically supplemented with posterior pedicle screw placement and/or anterior (or lateral) plating. Complications of pedicle screw placement in the spine may include duration of procedure, significant tissue dissection and muscle retraction, misplaced screws with neural and/or vascular injury, excessive blood loss, need for transfusions, prolonged recovery, incomplete return to work, and excess rigidity leading to adjacent segmental disease requiring further fusions and re-operations. Recent advances in pedicle screw fixation including minimally invasive and image-guided technology, and the development of flexible rods, imperfectly may address some but not all of these issues.

[0009] Anterior/and or lateral plating because of the plates' elevated profiles can be complicated by esophageal, or major vascular injury. The zero-profile devices described herein with reference to the exemplary embodiments avoid these complications.

[0010] Current non-expandable intervertebral spacers must be manufactured with different heights, and the most appropriate sized spacer is selected for insertion. In these situations, the vertebral bodies are forcefully distracted to allow placement of an imperfectly fitting spacer. These are most often supplemented with pedicle screw and/or or plate fixation.

SUMMARY

[0011] The exemplary embodiments described herein can allow a more precisely tailored complimentary fit between spacer and disc space, allowing the spacer to expand gradually in a calibrated manner, and to incrementally achieve the precise fit and degree of distraction desirable. Thus, the process according to the present invention can be more individualized for every patient and apply less forceful disruption to the intervertebral space thereby improving safety and enhancing effectiveness of the placement of intervertebral spacers. The exemplary embodiments are zero-profile, and thus, do not damage or indent overlying soft tissue or vascular structures further decreasing morbidity.

[0012] Herein described are exemplary embodiments of multiple ZP-EIS devices which combine in a single construct the dual functions of calibrated expandable

intervertebral spacer distraction maintaining disc space height, and simultaneous segmental vertebral body spinal fusion.

[0013] To achieve safe, effective zero-profile and minimally invasive segmental spinal fusion, the exemplary embodiments of the present invention use of novel zero-profile calibrated expandable spacer (ZP-EIS) devices with or without BDFT screws which can be strategically inserted into the intervertebral disc space via anterior, anterio-lateral, lateral, far lateral or posterior surgical approaches.

[0014] In Applicants' applications set forth in the Cross-Reference to Related Applications, exemplary embodiments are directed to expanding intervertebral spacers which incorporated BDFT screws. One of these embodiments includes two sliding triangular bases to house two screws driven in two opposing directions which can be expanded in two simultaneous directions, height and depth, by turning a built-in screw adjuster. This was facilitated by a combined external drill/screw guide/cage expander to further enhance trajectory precision and to simultaneously expand the screw box in height and depth to custom-fit the individual disc space height. Applicants' copending applications set forth in the Cross-Reference to Related Applications further describe an exemplary embodiment of a universal tool and the adaptability of the tool, for example, to exemplary embodiments of sliding boxes, as well as to the exemplary embodiments described herein, including those with and without BDFT screws.

[0015] The evolved zero-profile expandable intervertebral spacer (ZP-EIS) embodiments with incorporated BDFT screws presented herein are more finely tapered and contoured to more easily allow insertion and conformation to the biconcave disc space.

[0016] The exemplary embodiments of ZP-EIS devices without incorporated BDFT screws described herein have the ability to incrementally and uniformly separate and distract the vertebral bodies. Each embodiment has a very unique mechanically designed mechanism of incremental expansion. The devices are all designed with cavities for bone fusion giving the surgeon the option to use these as stand-alone fusion/spacer devices or as supplemental devices if other screw fixation is deemed necessary. These innovations represent a continued evolution of our concept of zero-profile calibrated expandable intervertebral distraction/fusion spacers described in Applicants' applications, for example, as set forth in the Cross-Reference to Related Applications.

[0017] In the exemplary ZP-EIS embodiments with incorporated BDFT screws, a rostral-directed screw is passed through one built-in screw guide of the device which then is inserted and screwed into the superior vertebral body. Next, a caudally directed screw is passed through an adjacent built-in screw guide, which then is inserted and screwed into the inferior vertebral body. One of many novels features of this design is the built-in prescribed angles of the integral screw guides which allow the transvertebral penetration into the vertebral bodies. This is a truly amazing feat accomplished particularly in the posterior or lateral/far lateral lumbar spine considering the small anatomically restricted work zone within which to work, which is very narrowly prescribed by obtuse angulations between screw and intervertebral bone surfaces, and by nerve root, facet joint and pedicle. Applicants' applications set forth in the Cross-Reference to Related Applications included an angled screw driver specifically designed to fit these devices if

a straight screw driver impedes screw placement. Hence, these external tools can provide the means in any circumstance to accomplish precision screw trajectory.

[0018] The exemplary zero-profile embodiments of the present invention can provide enhanced individualized intervertebral conformation, and multiple methods of finely calibrating intervertebral expansion, and vertebral body distraction further reducing morbidity and enabling more minimally invasive surgical methods of vertebral body distraction and segmental fusion compared to Applicants' applications set forth in the Cross-Reference to Related Applications.

[0019] The exemplary embodiments of box casings can include perforations to allow bone packing for fusion. These exemplary devices can prevent subsidence. In an exemplary embodiment, both the inside of the denuded intervertebral space, and the devices can be packed with autologous or allograft bone, BMP, DBX or similar osteoconductive material.

[0020] The zero-profile EIS embodiments, in particular those with incorporated BDFT screws, can provide as strong or stronger segmental fusion as pedicle screws without the complications arising from pedicle screw placement which include screw misplacement with potential nerve and/or vascular injury, violation of healthy facets, possible pedicle destruction, blood loss, and overly rigid fusions. In the case of the posterior Lumbar spine by placing screws across the intervertebral space from vertebral body to vertebral body, engaging anterior and middle spinal columns, and not the vertebral bodies via the transpediclar route, the healthy facet joints, if they exist, are preserved. Because the exemplary techniques accomplish both anterior and middle column fusion, without rigidly fixating the posterior column, the exemplary embodiments

in essence create a flexible fusion. This exemplary devices therefore can provide a flexible fusion device because the preserved posterior facet joints retain their function achieving at least a modicum of mobility and hence a less rigid (i.e. a flexible) fusion.

[0021] The very advantage of transpedicular screws which facilitate a strong solid fusion by rigidly engaging all three spinal columns is the same mechanical mechanism whereby complete inflexibility of all columns is incurred thereby leading to increasing rostral and caudal segmental stress which leads to an increased rate of re-operation.

[0022] Transvertebral fusion also leads to far less muscle retraction, blood loss, and significant reduction in operating room (O.R.) time. Thus, the complication of pedicular screw pull-out and hence high re-operation rate associated with the conventional flexible fusion pedicle screws/rods is obviated.

[0023] Although the exemplary embodiments can be supplemented with transpedicular screws, there would be no absolute need for supplemental pedicle screw fixation with these operative techniques. The expandable spacers without BDFT screws can be supplemented with other screw stabilization if desired.

[0024] Because the exemplary embodiments are zero-profile, these devices also obviate the morbidity involved with profiled anterior or lateral plating. Multi-level fusions can be performed with all of the exemplary embodiments described herein.

[0025] Currently failed anterior lumbar arthroplasties are salvaged by combined anterior and posterior fusions. The exemplary ZP-EIS embodiments with incorporated BDFT screws could be utilized as a one-step salvage operation for failed/extruded anteriorly placed lumbar artificial discs obviating the above salvage procedure which has far greater morbidity.

BRIEF DESCRIPTION OF DRAWINGS

[0026] These and other aspects and features of embodiments of the present invention will be better understood after a reading of the following detailed description, together with the attached drawings, wherein:

[0027] FIGS. 1A-1B illustrate an exemplary embodiment (Embodiment I) of a non-tapered sliding base ZP-EIS device with incorporated BDFT screws in sagittal-oblique (FIG. 1A), and exploded (FIG. 1B) views.

[0028] FIGS. 2A-2D illustrate an exemplary embodiment (Embodiment II) of a tapered sliding base ZP-EIS device with incorporated BDFT screws in closed (FIG. 2A), semi-expanded (FIG. 2B), and fully expanded (FIG. 2C) positions, and in an exploded view (FIG. 2D).

[0029] FIGS. 3A-3D illustrate an exemplary embodiment (Embodiment III) of a scissors jack driven ZP-EIS device without incorporated BDFT screws in closed (FIG. 3A), semi- expanded (FIG. 3B), and fully expanded (FIG.3C) positions, and in exploded view (FIG. 3D).

[0030] FIGS. 4A-4C illustrate an exemplary embodiment (Embodiment IV) of a tapered thread driven ZP-EIS device without incorporated BDFT screws in closed (FIG. 4A), semi-expanded/fully expanded positions (FIG. 4B), and in cross-sectional view (FIG. 4C).

[0031] FIGS. 5A-5D illustrate an exemplary embodiment (Embodiment V) of a dry anchor driven ZP-EIS device without incorporated BDFT screws in closed (FIG. 5A),

semi- expanded (FIG. 5B), and fully expanded (FIG. 5C) positions, and in an exploded view (FIG. 5D).

[0032] FIGS. 6A-6D illustrate an exemplary embodiment (Embodiment VI) of a modified wedge driven ZP-EIS device without incorporated BDFT screws in closed (FIG. 6A), semi-expanded (FIG. 6B), and fully expanded (FIG. 6C) positions, and in an exploded view (FIG. 6D).

[0033] FIGS. 7A-7D illustrate an exemplary embodiment (Embodiment VII) of a worm drive ZP-EIS device without incorporated BDFT screws in closed (FIG. 7A), semi-expanded (FIG. 7B), and fully expanded (FIG. 7C) positions, and in an exploded view (FIG. 7D).

[0034] FIGS. 7E(i) and 7E(ii) illustrate top, perspective views of an intervertebral cage construct according to an exemplary embodiment of the invention.

[0035] FIG. 8A-8C illustrate a positioning tool/screw guide/box expander in oblique perspective (FIG. 8A), lateral (FIG. 8B), and exploded (FIG. 8C) views according to an exemplary embodiment, which is shown coupled to the exemplary non-tapered sliding base ZP-EIS device illustrated in FIGS. 1A-1B.

[0036] FIG. 8D(i) and 8D(ii) illustrate superior oblique perspective views of the positioning tool/drill guide/box expander component, according to an exemplary embodiment, which may be optionally used for the exemplary embodiments illustrated in FIGS. 1A-1B and 2A-2D.

[0037] FIGS. 8E-8G illustrate sequential steps (I-III: Step I (FIG. 8E), step II (FIG. 8F), and step III (FIG. 8G)) of the positioning tool/screw guide/box expander assembly according to an exemplary embodiment.

[0038] FIGS. 8H-8I illustrate three-dimensional views of positioning tools, according to exemplary embodiments, for impaction and placement of two transvertebral screws, for example, of the exemplary embodiments illustrated in FIGS. 1A-1B and 2A-2D.

[0039] FIGS. 8J-8K illustrate the insertion of expandable Lumbar bi-directional screw box with two BDFT screws into the Lumbar spine in oblique (FIG. 8J) and lateral (FIG. 8K) views.

DETAILED DESCRIPTION OF THE INVENTION

[0040] The present invention now is described more fully hereinafter with reference to the accompanying drawings, in which embodiments of the invention are shown. This invention may, however, be embodied in many different forms and should not be construed as limited to the embodiments set forth herein; rather, these embodiments are provided so that this disclosure will be thorough and complete, and will fully convey the scope of the invention to those skilled in the art.

1. THE MEDICAL DEVICE

[0041] Referring now to the drawings, Figures 1A-8K illustrate exemplary embodiments of ZP-EIS devices that can solve the above described problems and others in the spine by insertion of the ZP-EIS devices into the denuded intervertebral disc space according to the features illustrated in the exemplary embodiments (I-VII).

[0042] FIGS. 1A-1B illustrate three-dimensional views of a ZP-EIS device 100 according to embodiment I, with two BDFT screws 101, 102.

[0043] The expandable ZP-EIS device 100 includes of top and bottom triangular sliding bases 103, 104 (FIGS. 1A-1B). The superior and inferior segments of the height/depth adjusting screw 105 are integrated and connected to the two separate top and bottom triangular bases 103, 104, respectively. By turning this adjusting (rotation) screw 105 back and forth, i.e. clock-wise, and counter clockwise, the sliding rails 106 of the top triangular base 103 (FIGS. 1A-1B) slide up and down the rail inserts 107 on the bottom triangular base 104 (FIGS. 1A-1B). This action will simultaneously alter the intervertebral height and depth of the device 100 allowing individualized custom fitting of the ZPEIS device 100 conforming to the dimensions of the disc space.

[0044] A transvertebral screw 101 penetrates the top base 103, and a transvertebral screw 102 traverses the bottom base 104 of the screw box (device 100). The two screws 101, 102 traverse the screw box 100 in opposing directions, bi-directionally. The external edges of the triangular bases 103, 104 in contact with vertebral body surfaces can include ridges 107, which facilitates the ZP-EIS device 100 incorporation into and fusion with the superior and inferior vertebral bodies (FIGS. 1A-1B). Both top and bottom ZP-EIS bases 103, 104 can be perforated with holes 108 to allow bone placement for fusion. In an exemplary embodiment, the entire construct, furthermore, can be hollow to allow filling with bone filling material. Hence, the exemplary device functions as both an intervertebral bone fusion spacer and bi-directional transvertebral screw fusion device.

[0045] FIGS. 2A-2D illustrate a ZP-EIS device 200 according to exemplary embodiment II. This exemplary device 200 incorporates BDFT screws and employs a fusion wedge mechanism of expansion.

[0046] The device 200 includes a contoured top 208 and bottom 206 housing which have tapered edges and are coupled to each other by a diagonal dovetail interface 204 which constrains the components 208, 206 to translate linearly relative to each other. The linear translation causes a vertical separation of the top 208 and bottom 206 housing surfaces which are parallel to each other. The position is secured and adjusted by a threaded rotation screw 220 coupled to a nut 224 and a retaining ring 222 and passed through the top 208 and bottom 206 housing pieces. As the threaded rotation screw 220 is rotated further into the nut 224, the housing pieces 208, 206 expand vertically.

[0047] By turning this adjusting (rotation) screw 220 back and forth i.e. clock-wise, and counter clockwise, the sliding rails 210 of the top housing piece 208 slide up and down the rail inserts 212 on the bottom housing piece 206. This action will simultaneously alter the intervertebral height and depth of the device 200 allowing individualized custom fitting of the ZP-EIS conforming to the dimensions of the disc space. A transvertebral screw 101 penetrates the top housing piece 208, and a transvertebral screw 102 traverses the bottom housing piece 206 of the device 200. The two screws 101, 102 traverse the device 200 in opposing directions, bi-directionally. The external edges of the housing pieces in contact with vertebral body surfaces include ridges 216. This facilitates the ZP-EIS device 200 incorporation into and fusion with the superior and inferior vertebral bodies (FIGS. 2A-2D). Both top and bottom ZP-EIS housing bases 208, 206 are perforated with holes 214 to allow bone placement for fusion. The entire device 200, furthermore, can be hollow to allow bone filling. Hence, the exemplary device 200 functions as both an intervertebral bone fusion spacer and bi-directional transvertebral screw fusion device.

[0048] The device 200 can include a tapered edge 226 (shown for example in FIGS. 2A-2B), which allows easier introduction and insertion of the device 200 into the disc space.

[0049] FIGS. 3A-3D illustrate a ZP-EIS device 300 according to exemplary embodiment III, which employs a scissor jack expansion mechanism.

[0050] In this embodiment the top 302 and bottom 304 housing are attached by one internal linkage arm 310, and two external linkage arms 308. The device 300 can include indentations 306 on each lateral side close to the top of the device 300 to mate with the prongs of the universal tool (for example, as described in FIGS. 8A-8I) to assist in grasping, inserting and impacting the device 300. A lead screw or rotation screw 314 is mounted in the bottom housing 304 and secured in place with a retaining ring 316. When the lead (rotation) screw 314 is rotated by an external tool (for example, as described in FIGS. 8A-8I), the screw 314 causes the linear displacement of the separation block 318 which is hinged to the internal linkage 310. The horizontal motion of the separation block causes the top 302 and bottom 304 housing pieces to separate vertically. The separation distance depends on the amount of rotation of the lead (rotation) screw 314, and is limited by the freedom of the separation block 318 to move within the bottom housing 304. The exemplary embodiment can include a plurality of pins, such as eight pins 320, 322, 324, to secure the external linkage arms 308 to the top 302 and bottom 304 housing units and to the separation block 318. The top housing 302 and bottom housing 304 can include one or more cavities 312 for bone incorporation/fusion.

[0051] FIGS. 4A-4C illustrate a ZP-EIS device 400 according to exemplary embodiment IV, which employs a tapered thread mechanism of expansion.

[0052] The exemplary device 400 can include a top housing 402 and bottom housing 404, which can be attached by one or more pins, such as two pins 412, which allow rotation of the top housing 402 and bottom housing 404 relative to each other about the axis of the pins 412. The top housing 402 and/o bottom housing 404 can include indentations 406 on their lateral sides close to the top of the device 400 to mate with the prongs of a tool or universal tool (e.g., prongs 806 in FIGS. 8A-8I) to assist in grasping, inserting and impacting the device 400. The bottom housing 404 can include a mount for the rotation screw 410 (FIG. 4C), which can control the relative angular orientation of the two housing pieces 402, 404. When the screw 410 is rotated by an external tool (e.g. as shown in FIGS. 8A-8I), the screw 410 engages the internal teeth/ridges 414 of the top housing 402 and acts as a wedge to rotate the top housing 402 away from the bottom housing 404. More particularly, the device 400 can include a sloped ridge 414, as exemplary illustrated in FIG. 4C. When the rotating screw 410 advances, the top housing 402 rotates further and further away from the bottom housing 404. The device 400 can include one or more bone cavities in the top housing 402 and bottom housing 404 for bone fusion.

[0053] FIGS. 5A-5D illustrate exemplary embodiments of a ZP-EIS device according to embodiment V, which employs an anchor mechanism of expansion.

[0054] The top housing 502 and bottom housing 504 can be coupled or attached by one or more pins, such as two pins 512, which allow rotation of the top housing 502 and bottom housing 504 relative to each other about the axis of the pins 512. The top housing 502 and/or the bottom housing 504 can include indentations 506 on their lateral sides close to the top of the device 500 to mate with the prongs of a tool or universal tool

(e.g. see FIGS. 8A-8I) to assist in grasping, inserting and impacting the device 500. The bottom housing 504 can include, for example, a mount for the lead (rotation) screw 510, which can control the relative angular orientation of the two housing pieces 502, 504. The lead (rotation) screw 510 can be secured with one or more retaining rings, such as two retaining rings 518. When the screw 510 is rotated by an external tool (not illustrated)(e.g., such as the tool shown in FIGS. 8A-8I), the screw 510 causes lateral motion of a translation nut 516, which is attached to two linkage bars 514 to a second nut 516 fixed to the bottom housing. A plurality of pins, such as six pins 512, can secure the linkage bars or arms 514 to each other and to translation nuts 516. When the translation nuts 516 move, the linkage bars or arms 514 extend outside of the bottom housing 504, pushing against the top housing 502. Alternatively, in other embodiments, the linkage bars or arms 514 can be replaced by a solid material such as spring steel which can bend to produce the same effect. The device 500 can include one or more bone cavities that can be incorporated into the top housing 502 and the bottom housing 504 for bone fusion.

[0055] FIGS. 6A-6D illustrate exemplary embodiments of a ZP-EIS device 600 according to embodiment VI which employs a modified wedge expansion mechanism.

[0056] The device 600 includes a top housing 602 and a bottom housing 604 that can be attached or coupled by one or more pins, such as two pins 612, which allow rotation of the top housing 602 and the bottom housing 604 relative to each other about the axis of the pins 612. The top housing 602 and/or the bottom housing 604 can include indentations 606 on their lateral sides close to the top of the device 600 to mate with the prongs of a tool, such as prongs 806 of the universal tool shown in FIGS. 8A-8I, to assist in grasping, inserting and impacting the device 600. The bottom housing 604 can

include a mount for the lead (rotation) screw 610, which can control the relative angular orientation of the two housing pieces 602, 604. The lead (rotation) screw 610 can be secured with one or more retaining rings, such as two retaining rings 618. When the screw 610 is rotated by an external tool (e.g., the tool shown in FIGS. 8A-8I), the screw 610 causes lateral motion of a wedge-shaped translation nut 616. The nut 616 engages an inner tapered surface of the top housing 602 and forces the top housing piece 602 to rotate away from the bottom housing 604. The device 600 can include one or more bone cavities 608 incorporated into the top housing 602 and/or bottom housing 604 for bone fusion.

[0057] FIGS. 7A-7D illustrate exemplary embodiments of a ZP-EIS device 700 according to embodiment VII, which employs a worm drive (gear) mechanism.

[0058] According to the invention, the device 700 includes a worm drive design that allows a user to rotate a worm gear/drive 712 with an external tool (FIG. 8) to control the translation of the top housing 702 relative to the bottom housing 704a, 704b. The worm gear drive 712 engages a spur gear mount 714 which has internal threading for engaging a corresponding part, such as a threaded stud of bolt 720, to couple the spur gear mount 714 to the top housing 702. The top housing 702 can include a plurality of pins, such as four pins 712, which extend into the bottom housing 704a, 704b. These pins 712 prevent the top housing 702 from rotating with the spur gear 714, and constrain the spur gear 714 to translate linearly. The bottom housing 704 can include two halves 704a, 704b to secure the worm drive 710 and spur mount 714 in place. A worm retaining ring and a spur retaining ring 716 also can be used to secure the worm gear drive 710 and the spur gear mount 714. The device 700 can include one or more bone cavities 708 that

are incorporated into the top housing 702 and/or bottom housing 704a, 704b for bone fusion. The top housing 702 and/or bottom housing 704a, 704b can include one or more indentations 706 on its lateral sides close to the top of the device 700 to mate with prongs of a tool, such as prongs 806 of the universal tool 800 in FIGS. 8A-8I, to assist in grasping, inserting and impacting the device 700.

[0059] FIGS. 8A-8C illustrate three-dimensional views of exemplary embodiments of the external drill/screw guide-box expander universal tool 800 which can be used to assist in both screw trajectory and box expansion of an expandible device, such as the exemplary embodiments of devices illustrated in embodiments I and II, and for device expansion of the devices illustrated in embodiments III - VII. The same universal tool 800 can be utilized for all the exemplary embodiments illustrated in embodiments I-VII. In some embodiments, the external drill/screw guide 850 may not be needed or used for embodiments II-VII. The prongs 806 can be inserted into the indentations (e.g., 202, 306, 406, 506, 606, 706) of the sides of the devices (e.g., 100, 200, 300, 400, 500, 600, 700) according to one or all of the exemplary embodiments illustrated in embodiments I-VII, and implant the device into the intervertebral space. Once implanted and impacted, an Allen key (e.g., as shown in FIG. 8) can be used to expand the device (e.g., 100, 200, 300, 400, 500, 600, 700) by turning the adjustment (rotation) screw (e.g., 105, 220, 314, 410, 510, 610, 710).

[0060] The exemplary tool can include, among other things, an Allen key 801, a spring 802, a handle 803, a griper 804 and a screw guide 805. The Allen key 801, when inserted in the insertion 814 and turned, can turn the rotation screws (e.g., 105, 220, 314, 410, 510, 610, 710) of one or all of the exemplary embodiments I-VII. The griper 804

includes griper prongs 806, which insert into grooves 509 of the screw guide 805 and the screw box indentations (e.g., 202) in the exemplary embodiment illustrated in embodiment I (as shown in FIGS 8A-8D), as well as in similar indentations (e.g., 306, 406, 506, 606, 706) of devices (e.g., 100, 200, 300, 400, 500, 600, 700) illustrated in embodiments II-VII (not shown).

[0061] As shown in FIG. 8C, each longitudinal end of the screw box 100 can include a slot or indentation 108 formed adjacent to an edge of an upper surface of the screw box 100 for engaging a protuberant extension of a tool, such as the protuberant extension 807 of the tool 800.

[0062] FIG. 8D illustrates a superior oblique view of the screw guide 805 demonstrating insertions 809 for griper prong 086, built-in trajectory guides 811, 812 for insertion of screws 101 and 102, and the Allen key 801. This exemplary embodiment can be limited, for example, to use with the devices of embodiments I and II, which includes BDFT screws.

[0063] FIGS. 8E-8G illustrate three-dimensional views of the sequential steps necessary for the external guide assembly. FIG. 8E illustrates the insertion of the Allen key 801 into the handle 803. FIG. 5F illustrates the insertion of the handle 803 through the spring 802 and griper 804. FIG. 8G illustrates insertion of the griper 804 into the screw guide 805. The griper prongs 806 can include medially oriented male protuberant extensions 807 that engage the slot or indentation of a device, such as indentation 108 of device 100, thereby perfectly aligning the prongs 805 of the tool 800 with the device (e.g., 100, 200, 300, 400, 500, 600, 700). This exemplary embodiment can be limited, for example, to use with the devices of embodiments I and II.

[0064] FIG. 8H illustrates a three-dimensional view of another exemplary embodiment of a positioning tool 800 for impaction and placement of two transvertebral screws 201, 202 for example, for use with the exemplary embodiments I and II.

[0065] With reference again to FIGS. 8A-8K, the screw guide 805 can include insertions 809 for receiving the griper prong 806, built-in trajectory guides 811, 812 for insertion of screws 101 and 102, and the Allen key 801.

[0066] The driver assembly 850 can include a screw driver 851, a flexible shaft 852 and a square recess bit 853. This exemplary device can facilitate turning the screws 101, 102 into the bone. The flexible shaft 852 can facilitate the avoidance of spinous processes which might hinder the screw driving if the shaft 852 were straight. The positioning tool 800 can have a rectangular handle, as shown for example in Embodiment I, or a circular handle, as exemplary shown in Embodiment II. This exemplary embodiment can serve to position a screw box within the intervertebral space, and screws 101, 102 within the screw box or device. Once positioned, the screw box or device (e.g., 100, 200, 300, 400, 500, 600, 700) can be impacted by tapping the handle 803 with a mallet (not shown). The griper handle 803 inserts into the screw guide and the screw box or device (e.g., 100, 200, 300, 400, 500, 600, 700), which maintains alignment.

2. THE SURGICAL METHOD

[0067] Exemplary embodiments of a surgical method for utilizing the exemplary devices described herein, will now be described. The procedures can be performed open, microscopic, closed tubular or endoscopic. Fluoroscopic guidance can be used with any of these procedures.

[0068] An exemplary embodiment of a ZP-EIS device, as illustrated in embodiments (I-VII), can be inserted into the intervertebral space (for example as shown in FIGS. 8J and 8K) after an adequate discectomy is performed in any disc space throughout the entire spine upon their exposure anteriorly, anterio-laterally, laterally, far laterally or posteriorly.

[0069] For exemplary embodiments I-II of the ZP-EIS devices can be inserted into the disc space by a tool or universal tool, such as the universal tool 800 in FIGS. 8A-8I. In operation, the grab prongs of tool 800 can attach to the insets or indentations (e.g., 202, 306, 406, 506, 606, 706) on the side of the devices. Once in the disc space, the rotation screw (e.g., 105, 220, 314, 410, 510, 610, 710) of each embodiment is turned by rotating the Allen key 801 of the tool 800 to expand the device (e.g., 100, 200, 300, 400, 500, 600, 700) to the desirable disc height achieving the desirable intervertebral distraction deemed necessary for the individual patient and disc space. Once this is achieved, BDFT screws 101, 102 are inserted and screwed into the vertebral body above and below securing the device (e.g., 100, 200, 300, 400, 500, 600, 700) to the vertebral bodies with screws 101, 102. Prior to implantation of the device (e.g., 100, 200, 300, 400, 500, 600, 700), the bone cavities of each device can be filled with any type of bone fusion material.

[0070] For the exemplary embodiments III-VII, the ZP-EIS device (e.g., 100, 200, 300, 400, 500, 600, 700) can be inserted into the disc space by the same universal tool, such as tool 800. The grabs prongs 806 of the tool 800 attach to the insets or indentations (e.g., 202, 306, 406, 506, 606, 706) on the side of the devices (e.g., 100, 200, 300, 400, 500, 600, 700) on the side of the devices (e.g., 100, 200, 300, 400, 500, 600,

700). Once in the disc space, the rotation screw (e.g., 105, 220, 314, 410, 510, 610, 710) is turned by rotating the Allen key 801 of the tool 800 expanding the device (e.g., 100, 200, 300, 400, 500, 600, 700) to the desirable disc height achieving the desirable intervertebral distraction deemed necessary for the individual patient and disc space. Prior to implantation of the device (e.g., 100, 200, 300, 400, 500, 600, 700)the bone cavities of each device (e.g., 100, 200, 300, 400, 500, 600, 700) can be filled with any type of bone fusion material.

[0071] The exemplary embodiments of the present invention may provide effective and safe techniques that overcome the problems associated with current transpedicular and/or plated fusion technology employed for many degenerative stable and unstable spine diseases. These exemplary embodiments may replace much pedicle screw-based and plated based instrumentation in many but not all degenerative spine conditions.

[0072] The speed and simplicity of the surgical implantation of the exemplary embodiments of the ZP-EIS devices far exceeds that of conventional pedicle screw technology. Furthermore, the exemplary embodiments of zero-profile devices can provide markedly significantly decreased risk of misguided screw placement, and hence decreased risk of neural and vascular injury, and blood loss. The exemplary embodiments can provide decreased recovery and back to work time. The exemplary embodiments of devices may lead to similar if not equal fusion with significantly less morbidity, and hence overall make the exemplary devices a major advance in the evolution of spinal instrumented technology leading to advances in the care of the spinal patient.

[0073] According to the exemplary embodiments, such as the embodiments in embodiments I and II, an intervertebral fusion device is provided that uses a threaded rod mechanism located at the peripheral of the box to control expansion of the device. The device can include a cavity within the walls for placement of bone material for fusion.

[0074] In another embodiment, an intervertebral fusion device can include a threaded rod which can obstruct (inhibit) expansion of the device when it is not being turned. The threaded rod can be disposed at the front anterior part of the box or device.

[0075] In yet another embodiment, an intervertebral fusion device can include a threaded rod, which exerts a clamping force to expand the device until the device properly accommodates the dimensions of the intervertebral disc space and distracts the space based on individual anatomy and surgical judgment. The device can include a cavity for bone in-between the walls of the box.

[0076] In another embodiment, an expandable intervertebral fusion device can includes indentations on its sides to accommodate a placement tool.

[0077] In another embodiment, an expandable intervertebral fusion device can be adjusted by using a threaded rod as a wedge to pivot components within the device. The threaded rod can be accessible from the front anterior of the box or device.

[0078] In another embodiment, an expandable fusion device can include a threaded rod to expand a spacer. The threaded rod can be used as a wedge to mechanically separate the pieces. The threaded rod can be accessible from the front anterior of the box or device.

[0079] In another embodiment, an expandable fusion device can include wedge components which translate relative to each other along a contact. The degree of

expansion can be determined by an adjustment rod located at the peripheral of the box or device.

[0080] In another embodiment, an expandable fusion device includes components which are mechanically linked together. The expansion of the device is controlled by the user via an adjustment rod coupled to a mechanical transmission that causes mechanical components within the device to separate. The threaded rod is accessible from the front anterior of the box or device.

[0081] In another embodiment, an expandable fusion device can be provide wherein the position of the device is secured and adjusted by a threaded rod that is mechanically linked to housing pieces. When the threaded rod is rotated, the threaded rod forces the pieces to separate.

[0082] In another embodiment, an intervertebral fusion device is provide wherein the two internal screw guides are in the top housing unit.

[0083] In another embodiment, an intervertebral fusion expansile device is provided wherein the center of the two internal screw guides could be in quadrants I and III or II and IV.

[0084] In another embodiment, an expandable fusion device can be provided that uses a threaded rod (rotation screw) to expand the device using a metal driver as the wedge to mechanically separate the pieces.

[0085] In another embodiment, an expandable fusion device can be adjusted by using a threaded rod (rotation screw) as a wedge to offset the opposing cages.

[0086] In another embodiment, an expandable intervertebral fusion device can be provided wherein its position is secured and adjusted by a threaded rod (rotation screw)

coupled to a nut and passed through the top and bottom housing pieces. As the threaded rod is rotated further into the nut, the pieces separate.

[0087] In another embodiment, an expandable intervertebral fusion device can include a tapered edge to allow contoured insertion into the disc space.

[0088] In another embodiment, an intervertebral fusion device can be provided wherein the internal screw guides for screw insertion within the device are diagonal to each other within the xyz plane.

[0089] In another embodiment, an intervertebral fusion device wherein the internal screw guides can be adjacent and somewhat diagonal to each other within the xyz plane.

[0090] In another embodiment, an intervertebral fusion device can be provided wherein the majority each of the 2 screw holes can be in quadrant I and III or II and IV within the xyz plane.

[0091] In another embodiment, an intervertebral fusion device can be provided wherein the screw guides can have approximately the same xy coordinates and have different z coordinates or vice versa.

[0092] In another embodiment, an intervertebral fusion device can be provided wherein the center of the two internal screw guides could be in quadrants I and III or II and IV within the xyz plane.

[0093] In another embodiment, an intervertebral fusion device can be provided wherein one screw guide is in the top housing unit, and another screw guide is in the bottom housing unit.

[0094] In another embodiment, an intervertebral fusion device can be provided that uses a threaded rod (rotation screw) to engage a moveable component which engages a linkage to expand the device.

[0095] In another embodiment, an intervertebral fusion device can be provided that uses a threaded rod (rotation screw) to engage a wedge which engages its attaching linkages to expand the device.

[0096] In another embodiment, an expandable fusion device can be provided that can be adjusted using a threaded rod (rotation screw) coupled to a scissor-jack linkage.

[0097] In another embodiment, an expandable fusion device can be held together with fastener (s). These fasteners constrain the box to one degree of freedom. Part of the mechanism contains a mount for the rotation screw, which can control the movement of the pieces. As the screw is turned, it engages the teeth of the mechanism and acts as a wedge to rotate the pieces away from each other.

[0098] In another embodiment, an expandable fusion device adjusted by using a threaded rod (rotation screw) can be used as a wedge to offset the opposing cage surfaces.

[0099] In another embodiment, an expandable fusion device can be provided that uses a threaded rod (rotation screw) to expand the device using a metal driver as the wedge to mechanically separate the pieces.

[00100] In another embodiment, an expandable fusion device can be provided that can be adjusted by a threaded rod (rotation screw) coupled to a nut which translates to deform an elastomeric material used to force the expansion of the device.

[00101] In another embodiment, an expandable fusion device can be provided that has a threaded rod (rotation screw) that engages a wedge to control the expansion of the device.

[00102] In another embodiment, an expandable fusion device can be provided that can be contained by fasteners and retaining rings.

[00103] In another embodiment, an expandable fusion device can be provided that can be adjusted by a threaded rod (rotation screw) coupled to a wedge that can move the opposing cage surfaces.

[00104] In another embodiment, an expandable fusion device can be provided that uses a worm drive to turn a gear that acts as a wedge to expand the device.

[00105] In another embodiment, an expandable fusion device can be provided that includes fasteners and retaining rings containing and constraining the device pieces.

[00106] In another embodiment, an expandable fusion device can be provided that can be adjusted by a worm gear coupled to an internally threaded spur gear which, upon rotation, linearly advances a threaded component.

[00107] In another embodiment, a tool includes a handle, a gripper cooperating with the handle and having a plurality of prongs, a screw guide held in place the plurality of prongs, for controlling the direction of self-drilling screws that are screwed into the vertebral bodies, and an Allen key which expands expandable intervertebral devices.

[00108] The present invention has been described herein in terms of several preferred embodiments. However, modifications and additions to these embodiments will become apparent to those of ordinary skill in the art upon a reading of the foregoing description. It is intended that all such modifications and additions comprise a part of the

present invention to the extent that they fall within the scope of the several claims appended hereto.

We claim:

1. An expandible intervertebral fusion device comprising:

a first movable portion;

a second movable portion; and

a mechanism that moves the first movable portion and the second movable portion with respect to each other to expand a dimension of the expandible intervertebral fusion device.

ABSTRACT

A unique, universal Zero-Profile Expandable Intervertebral Spacer (ZP-EIS) device for fusion and distraction throughout the entire spine is provided which can be inserted via anterior, anterolateral, lateral, far lateral or posterior surgical approaches dependent on the need and preference. Multiple ZP-EIS embodiments each with unique mechanisms of calibrated expansion are provided. Two of these embodiments incorporate bi-directional fixating transvertebral (BDFT) screws and five other embodiments do not incorporate BDFT screws. A tool for implantation into the intervertebral device and calibrated device expansion is also disclosed.

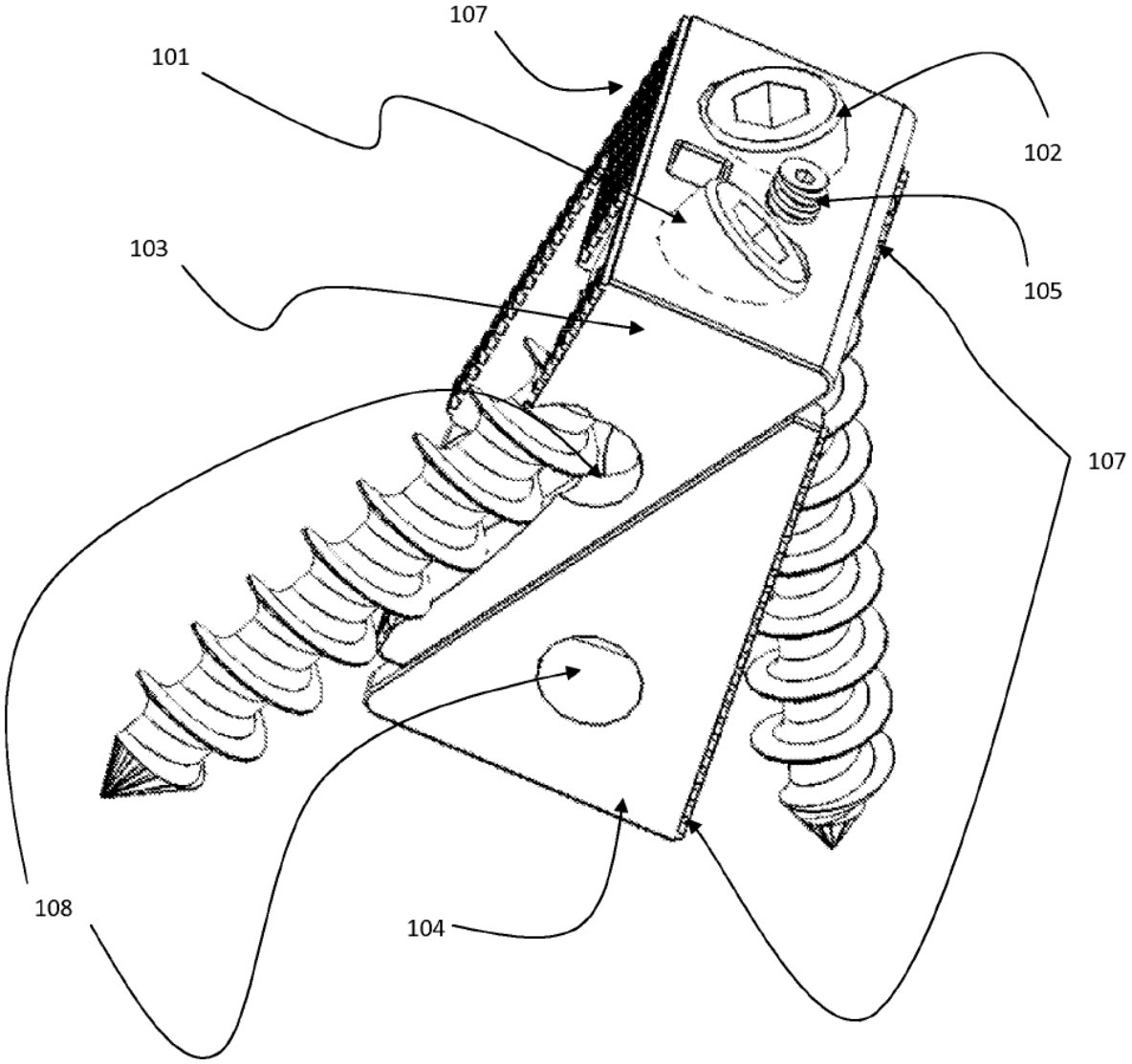

Fig. 1A

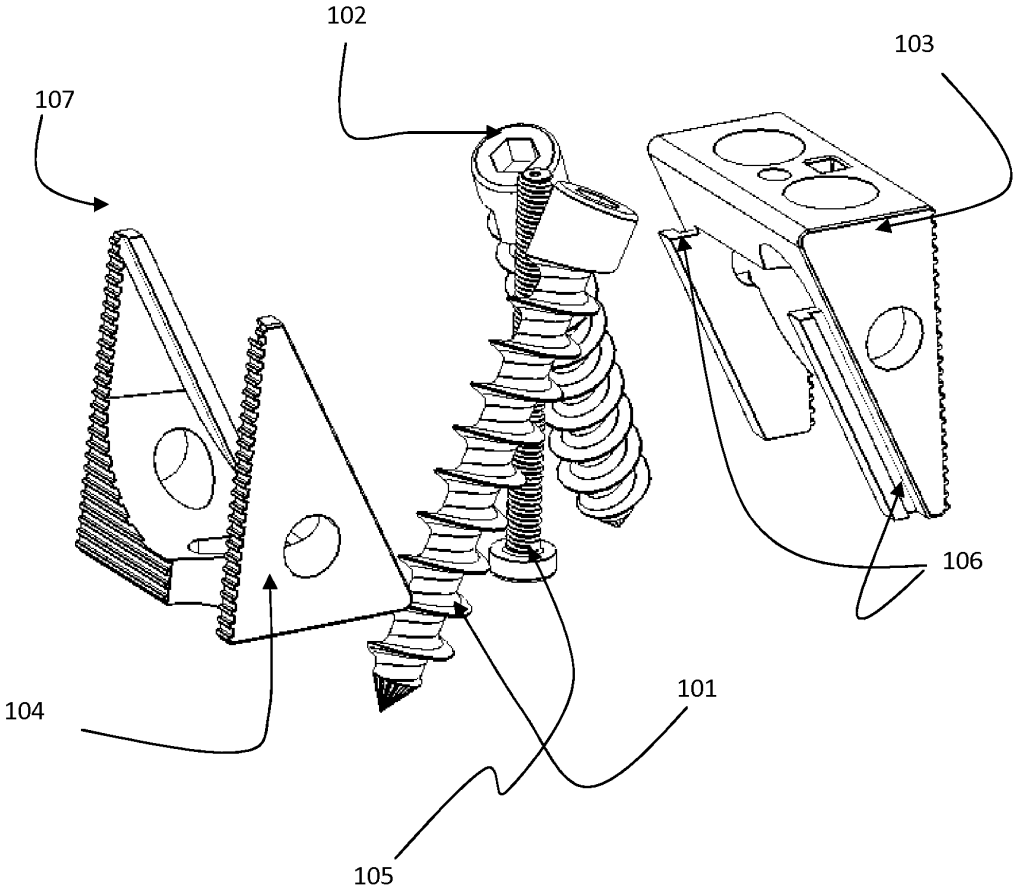

Fig. 1B

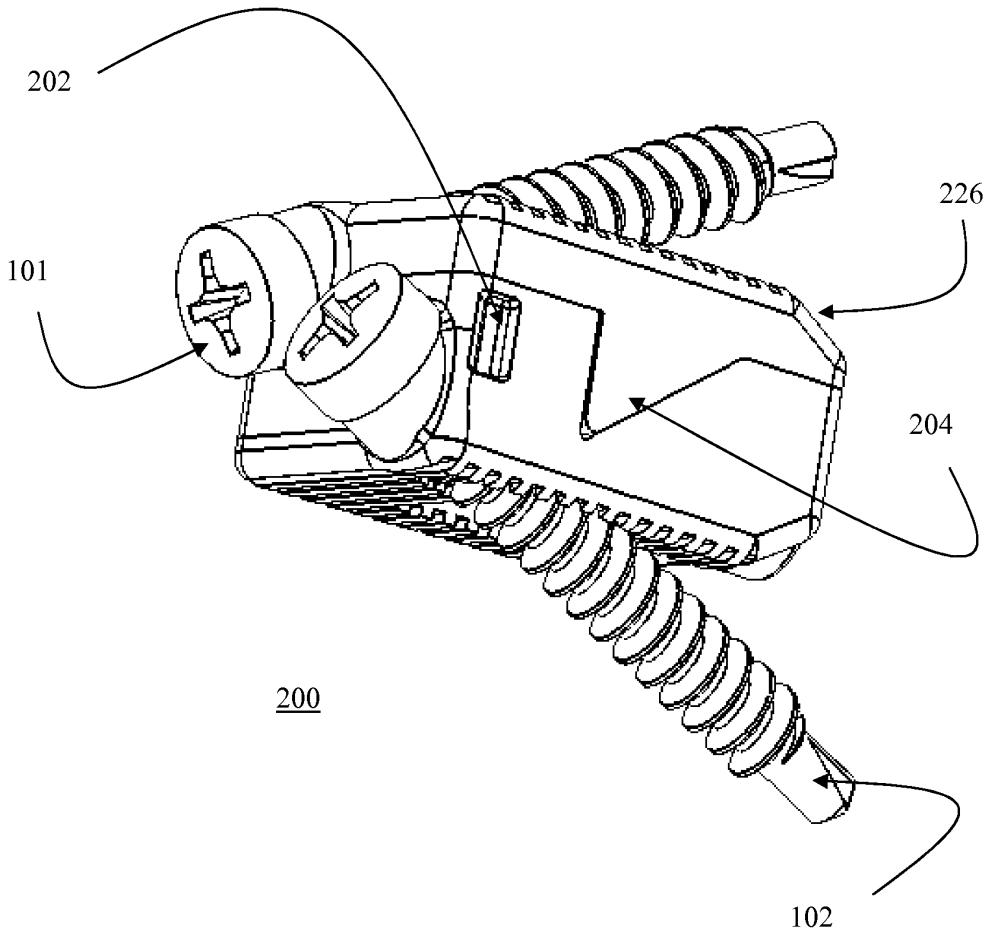

Fig. 2A

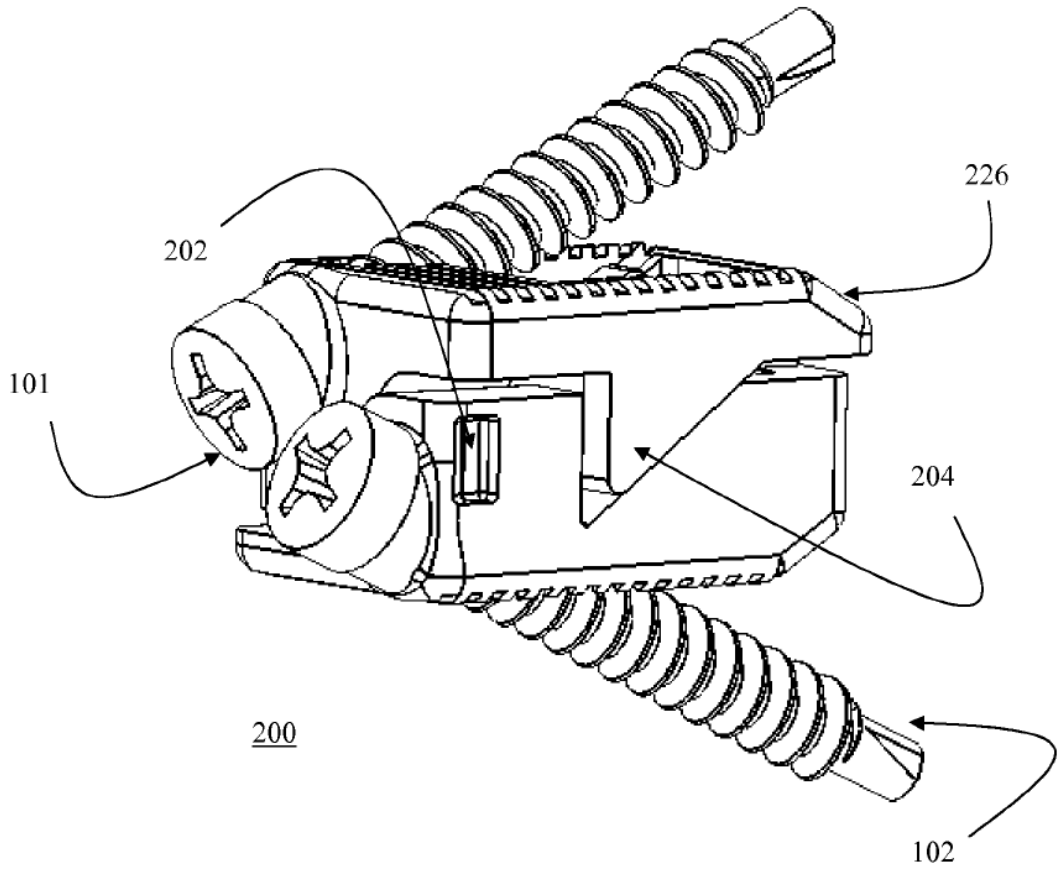

Fig. 2B

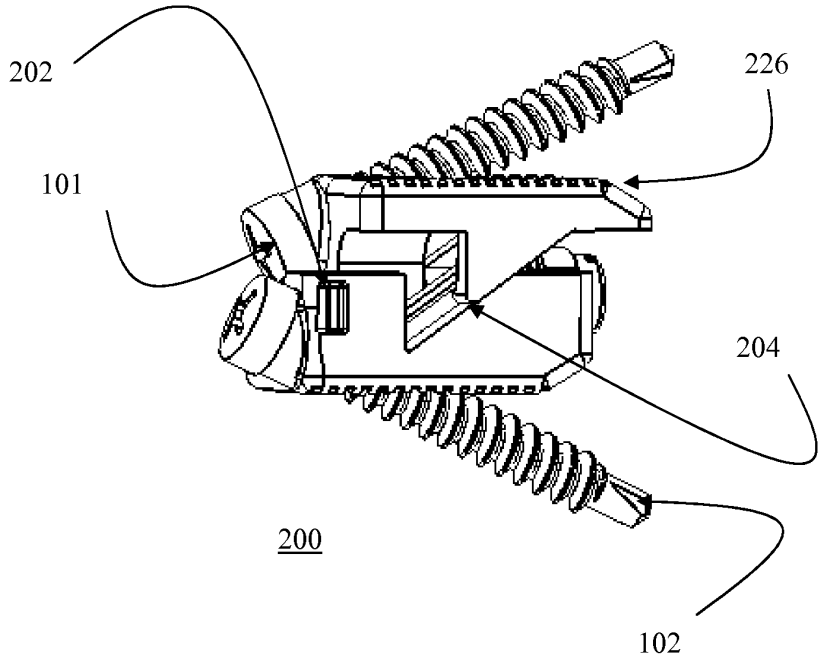

Fig. 2C

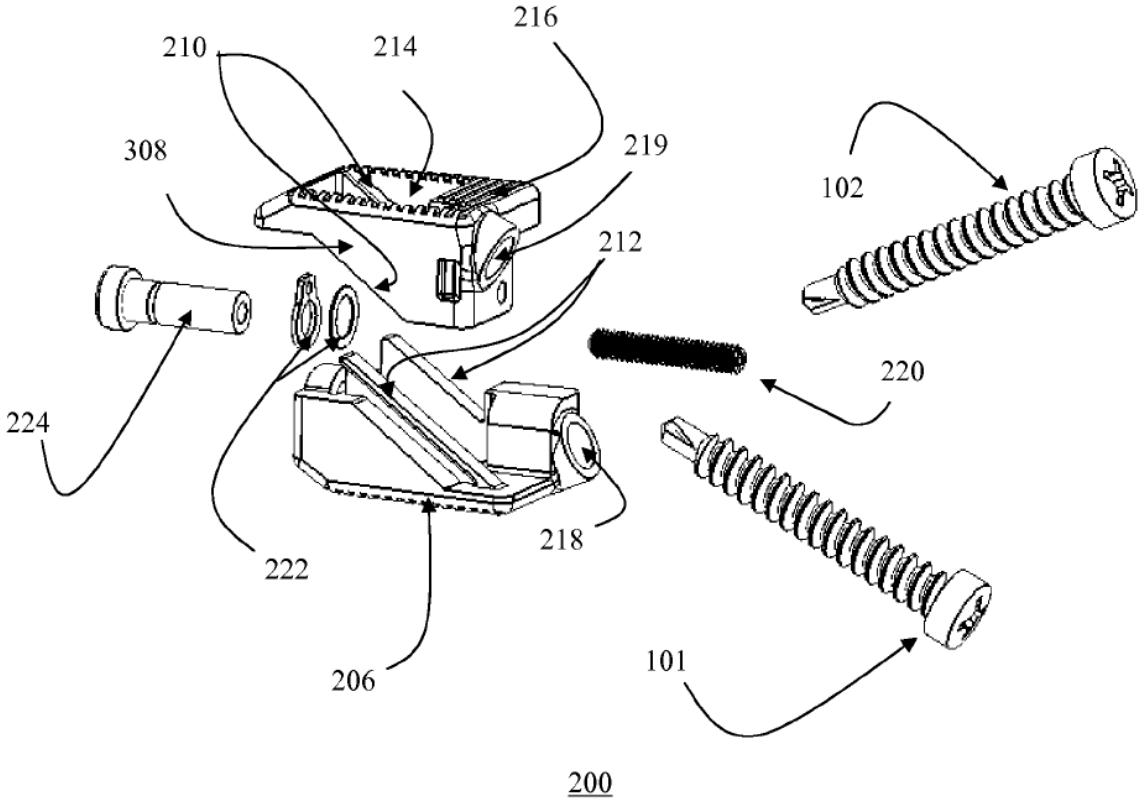

Fig. 2D

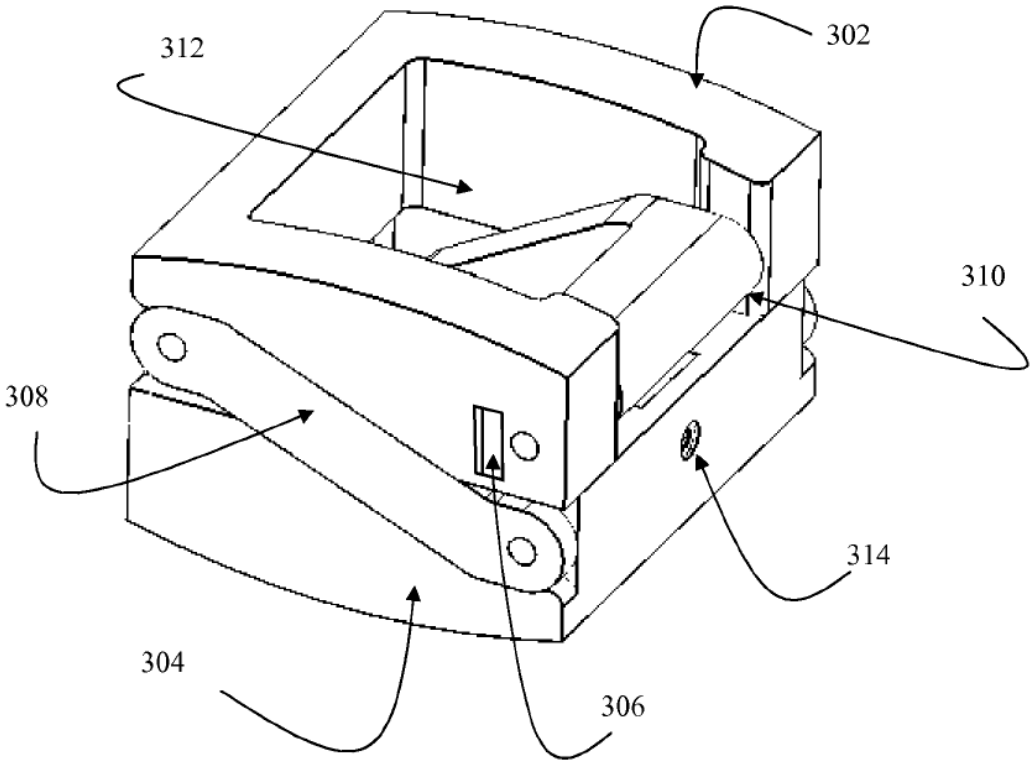

Fig. 3A

300

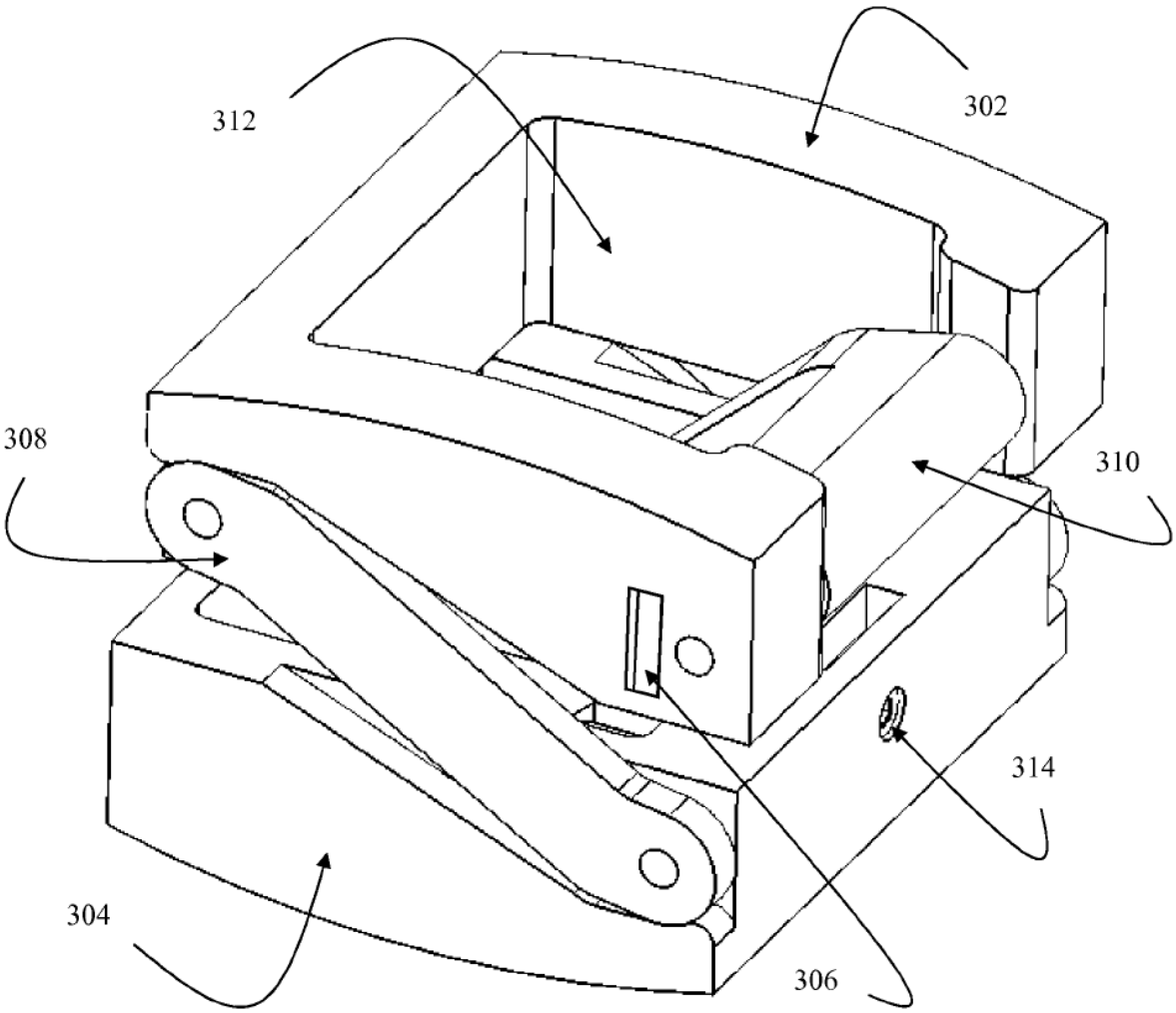

Fig. 3B

300

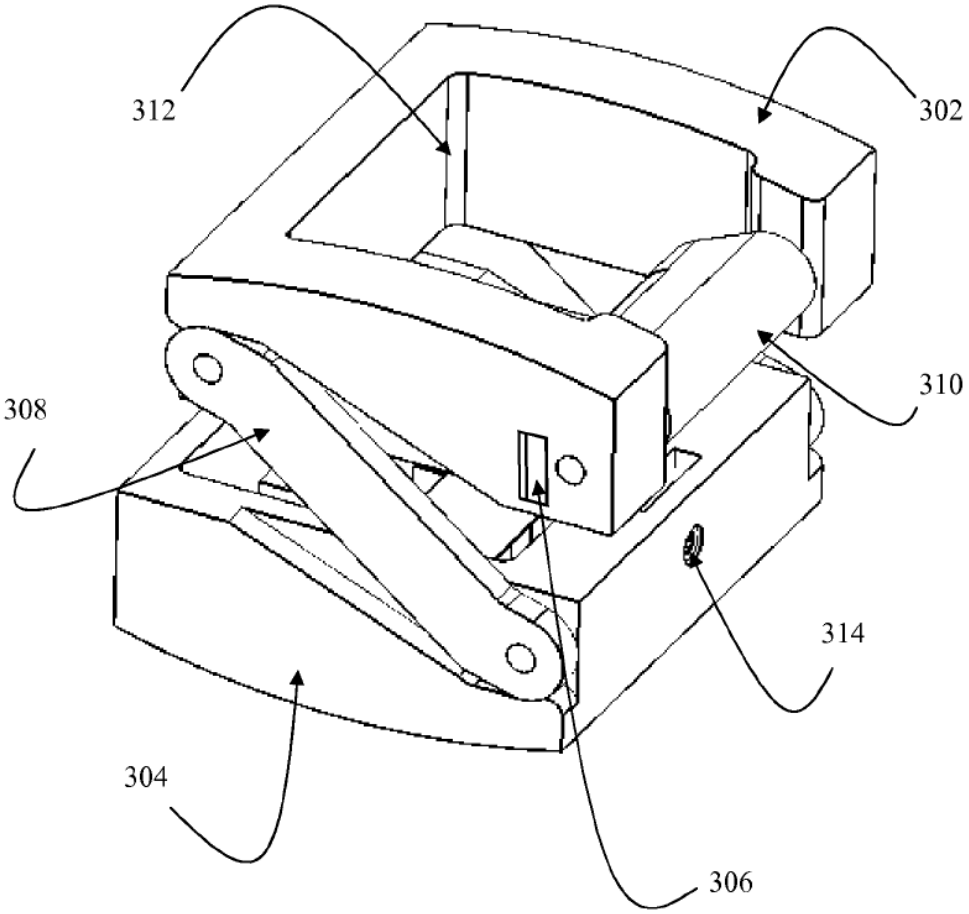

Fig. 3C

400

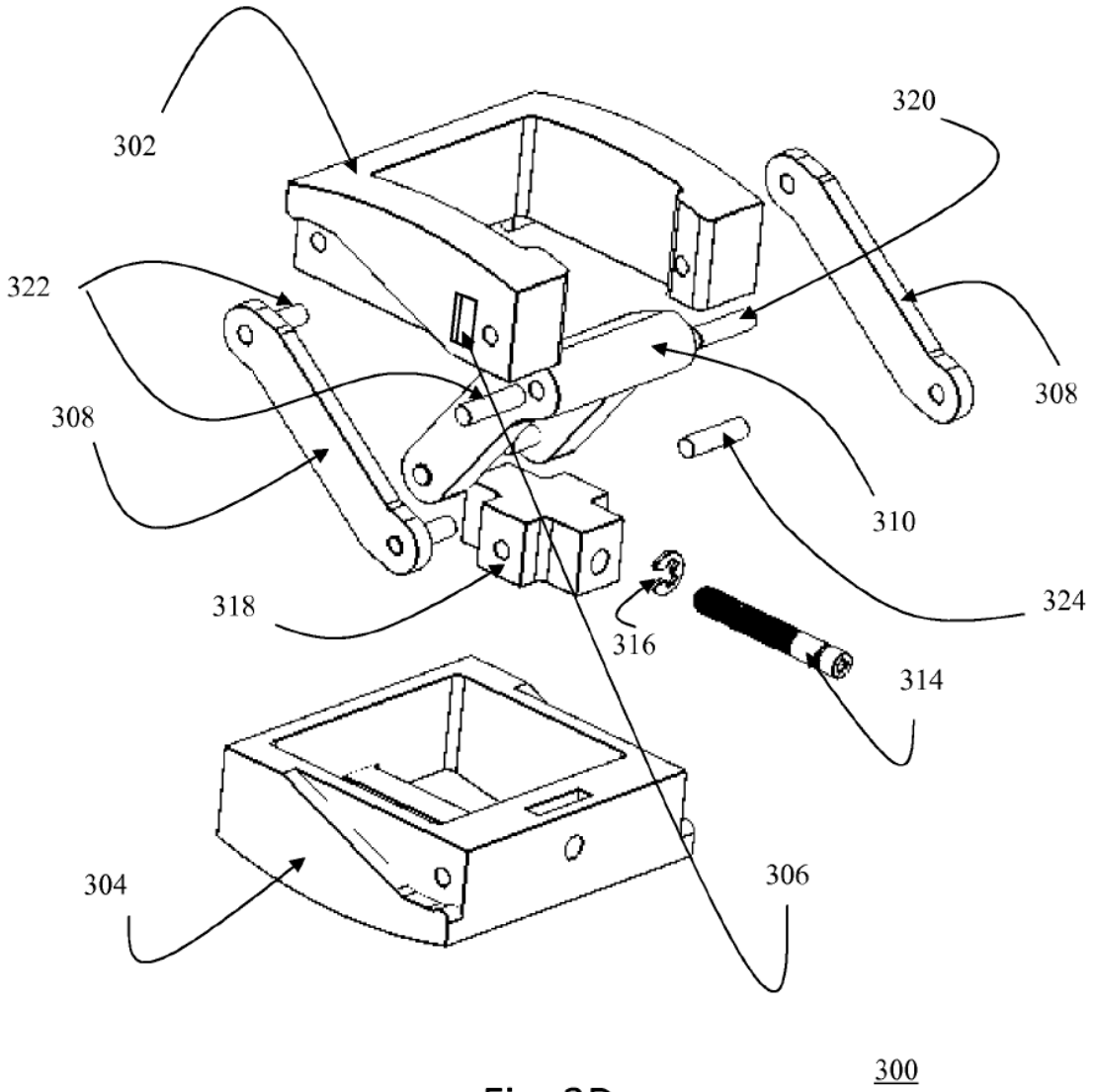

Fig. 3D

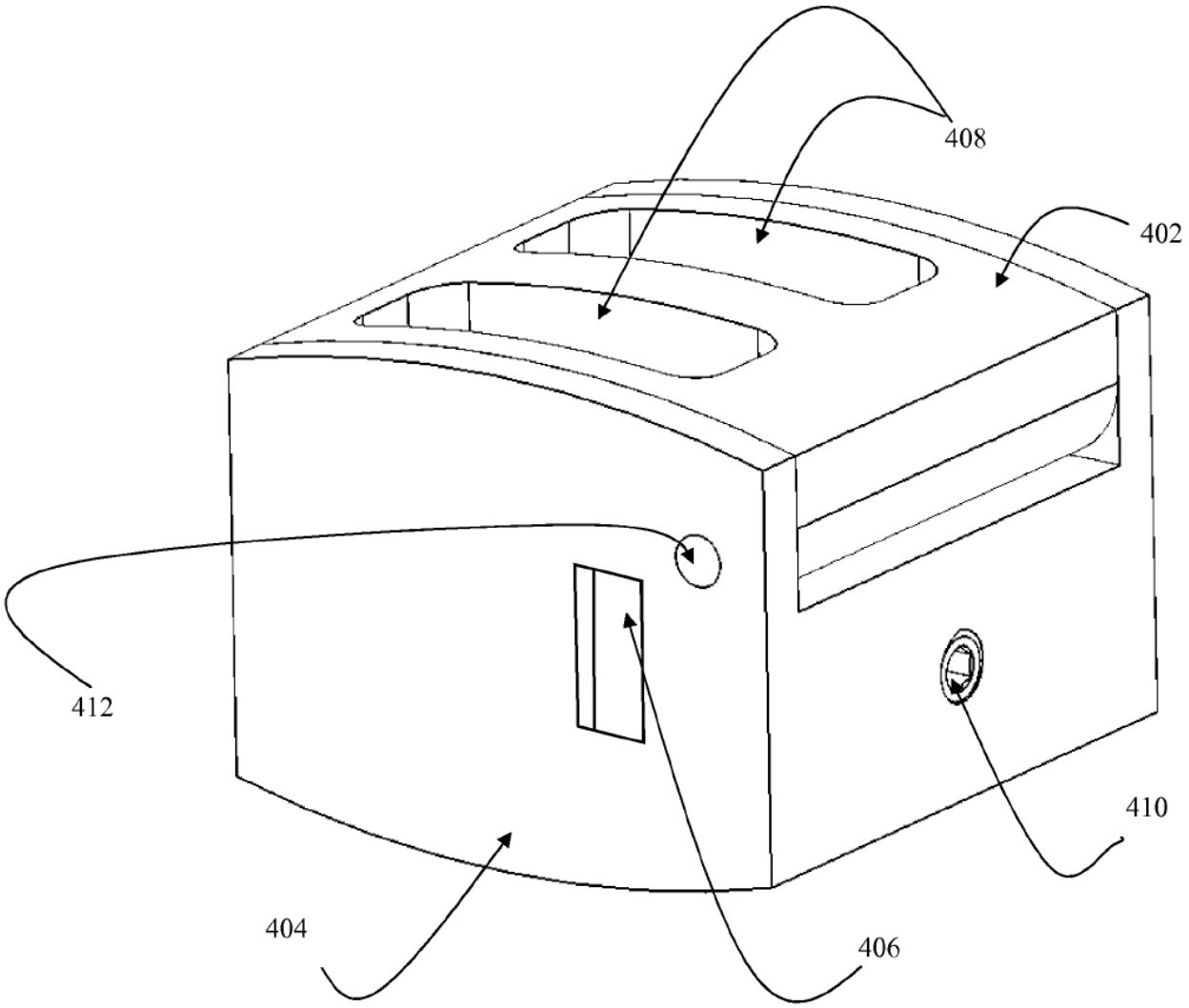

Fig. 4A

400

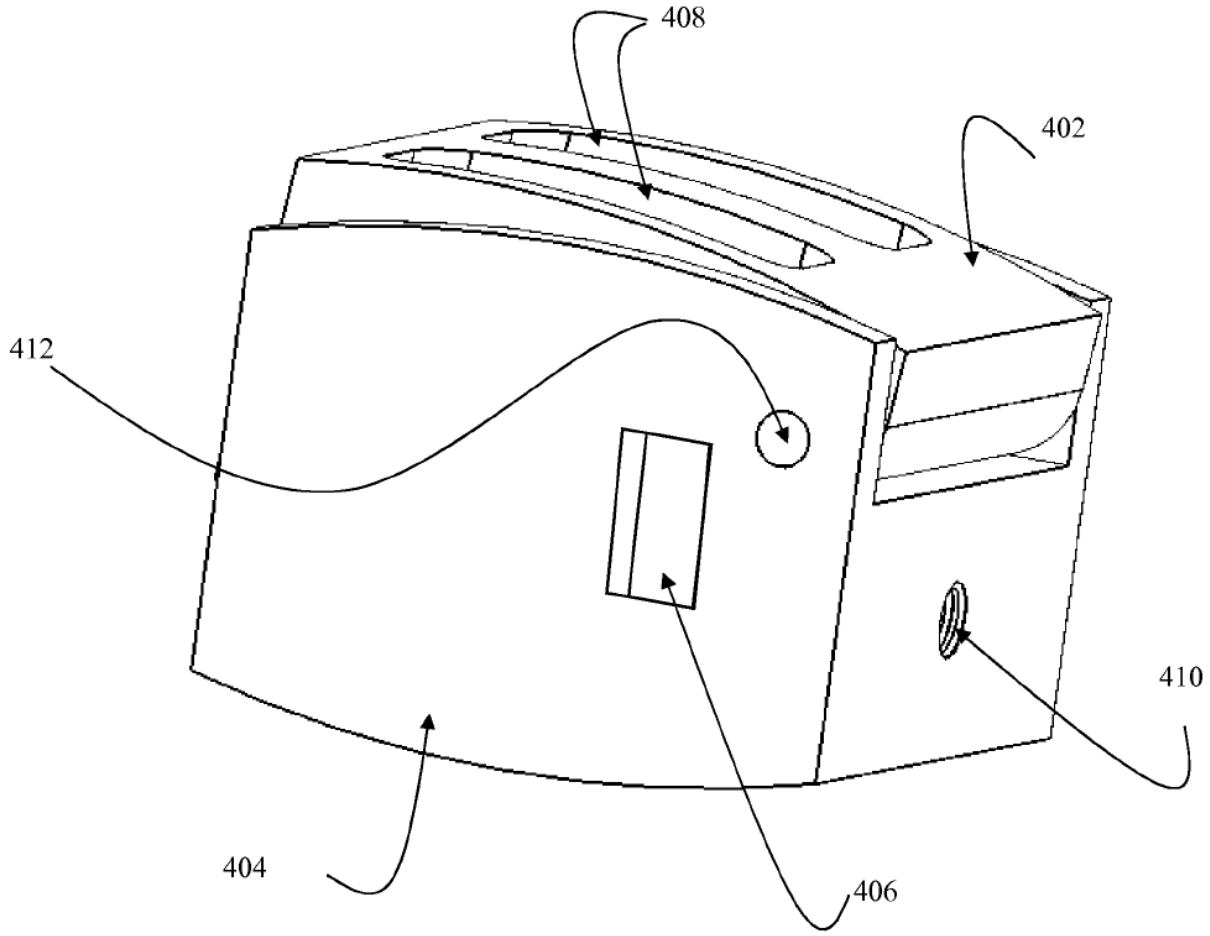

Fig. 4B

400

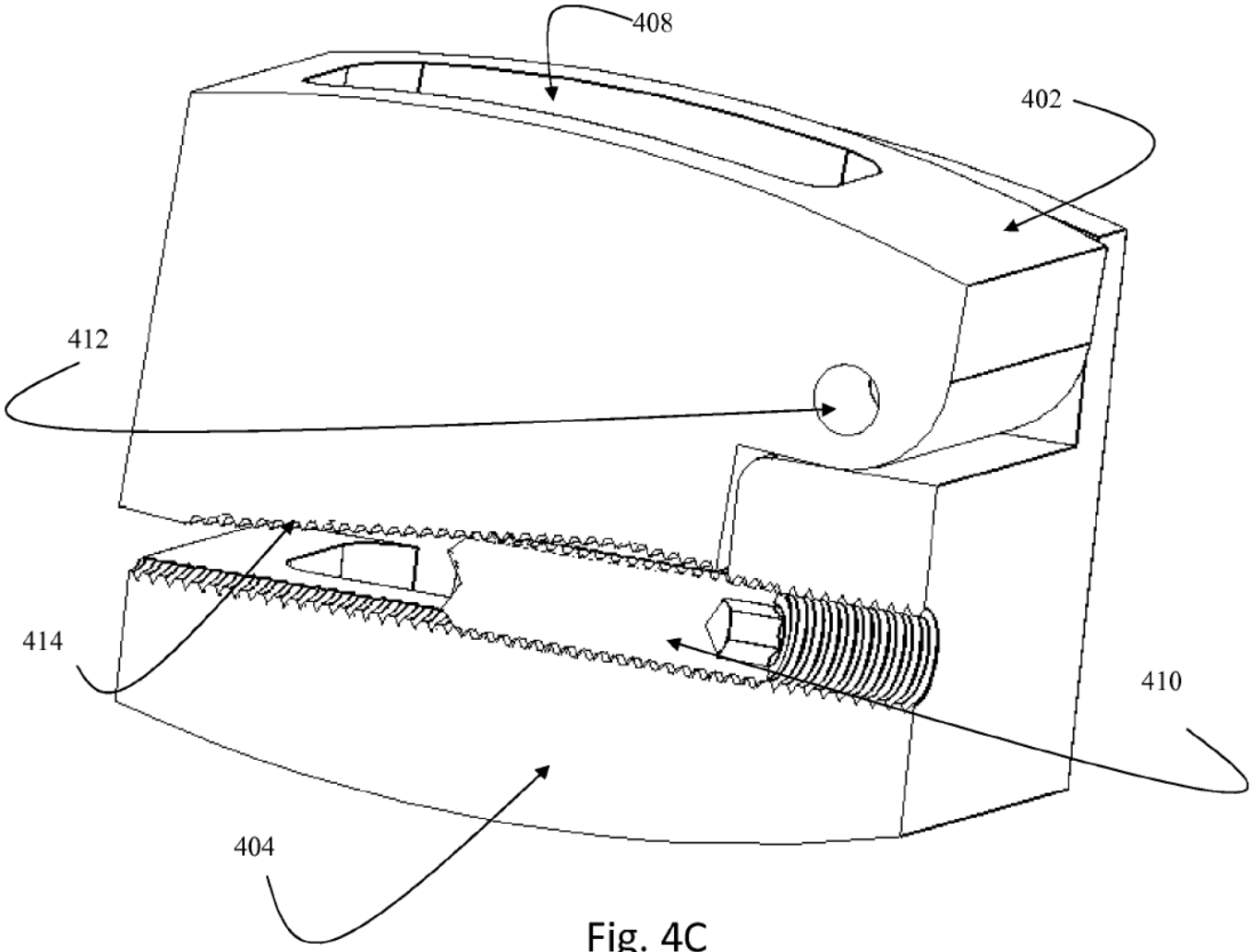

Fig. 4C

400

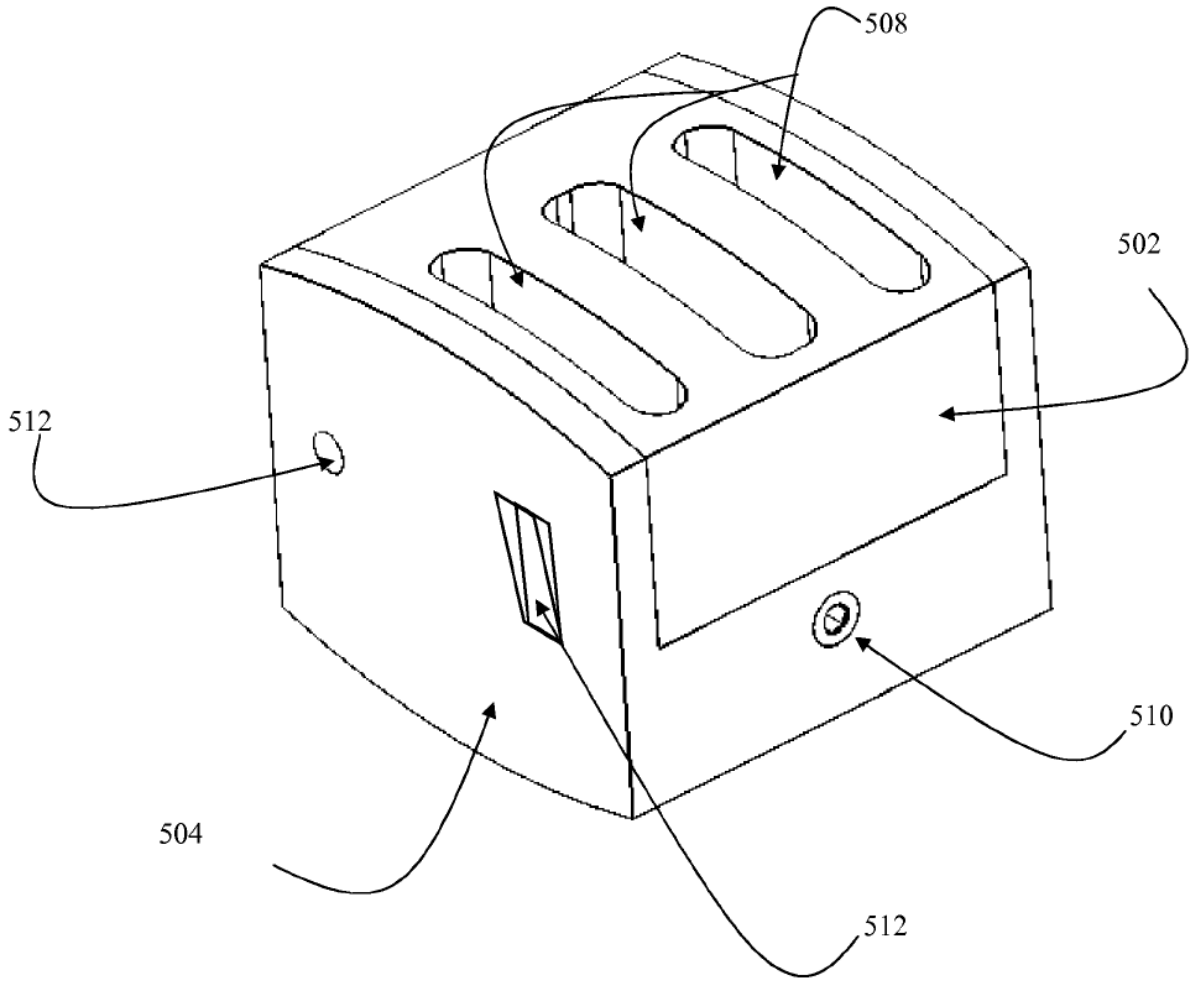

Fig. 5A

500

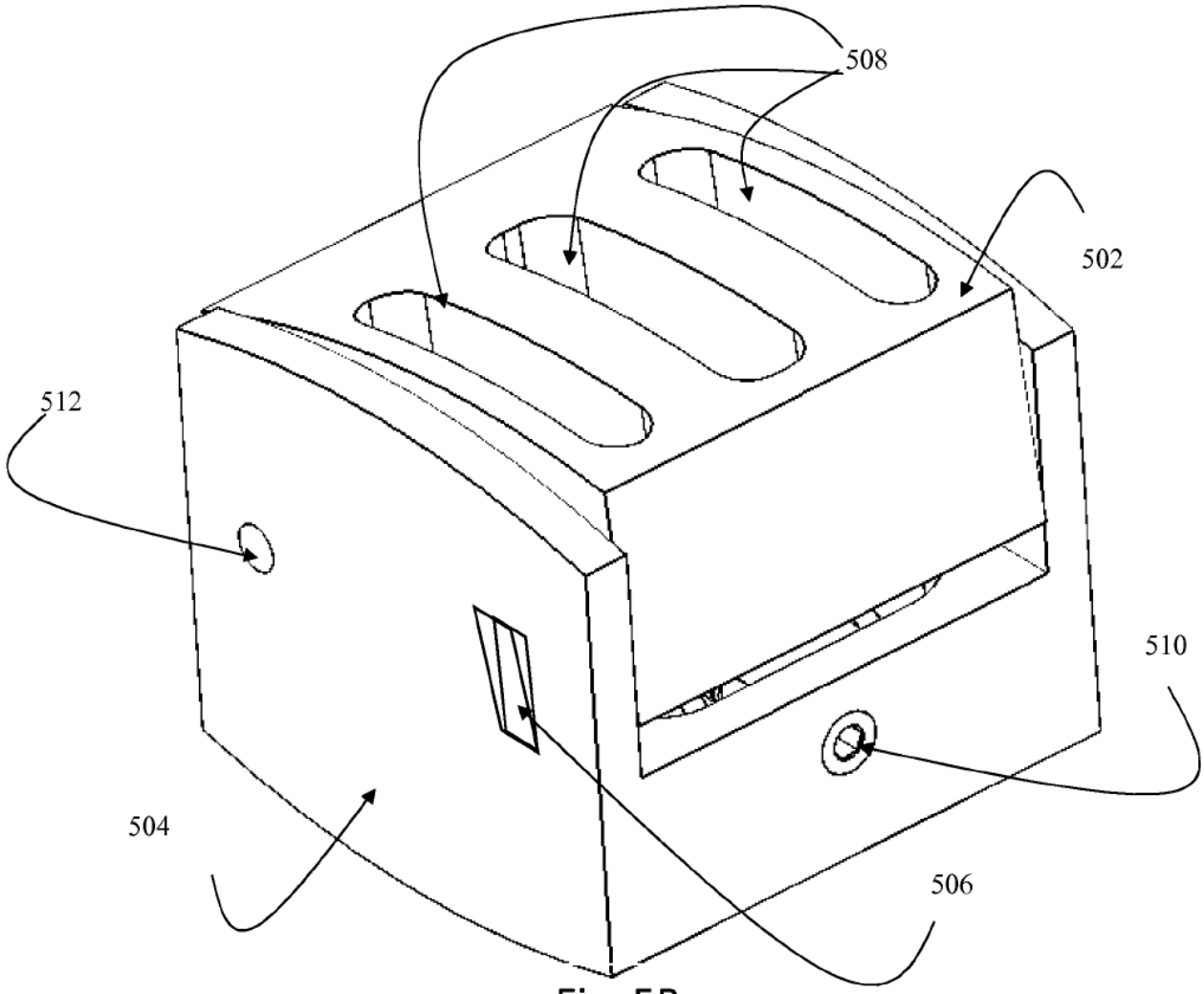

Fig. 5B

500

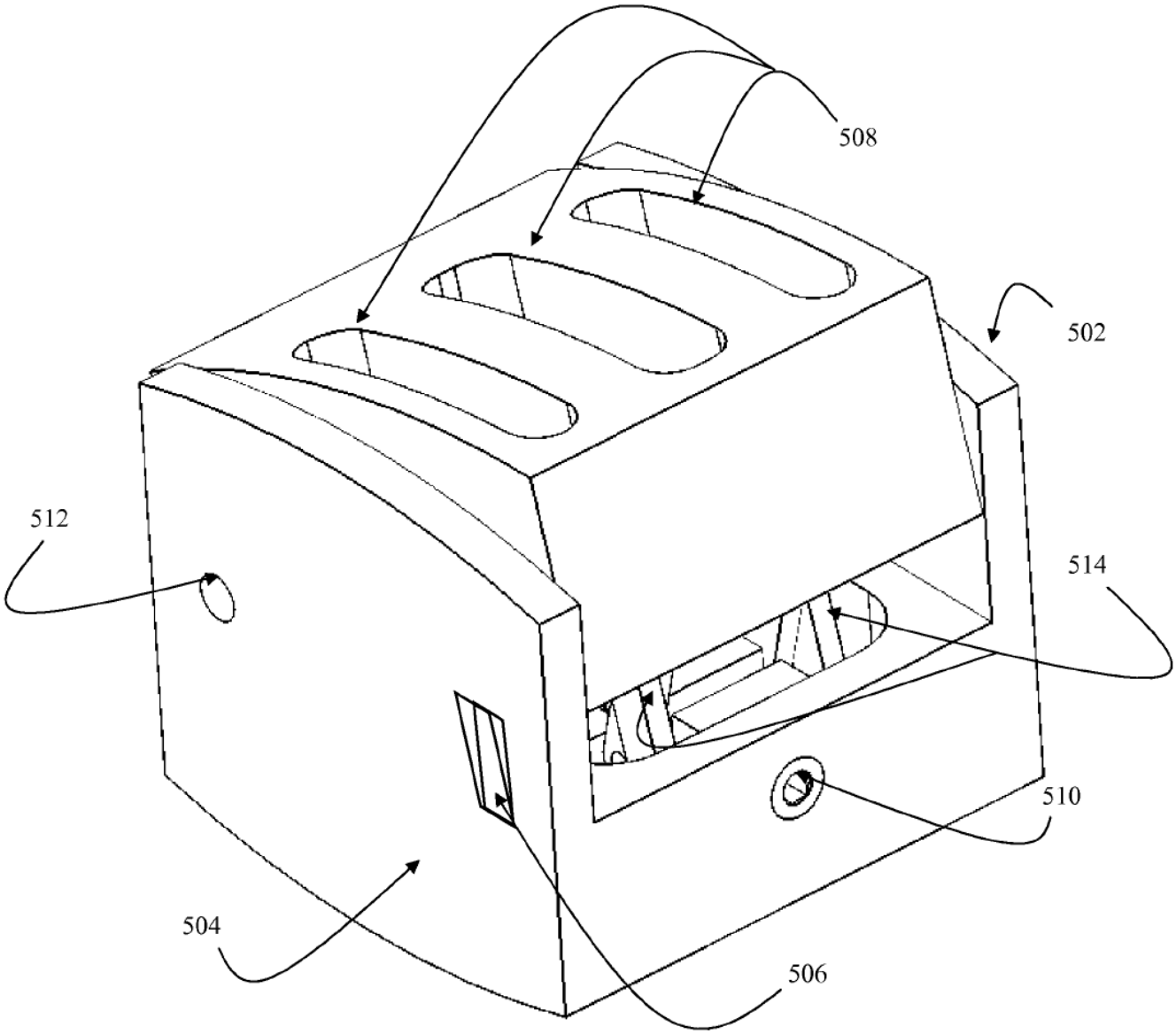

Fig. 5C

500

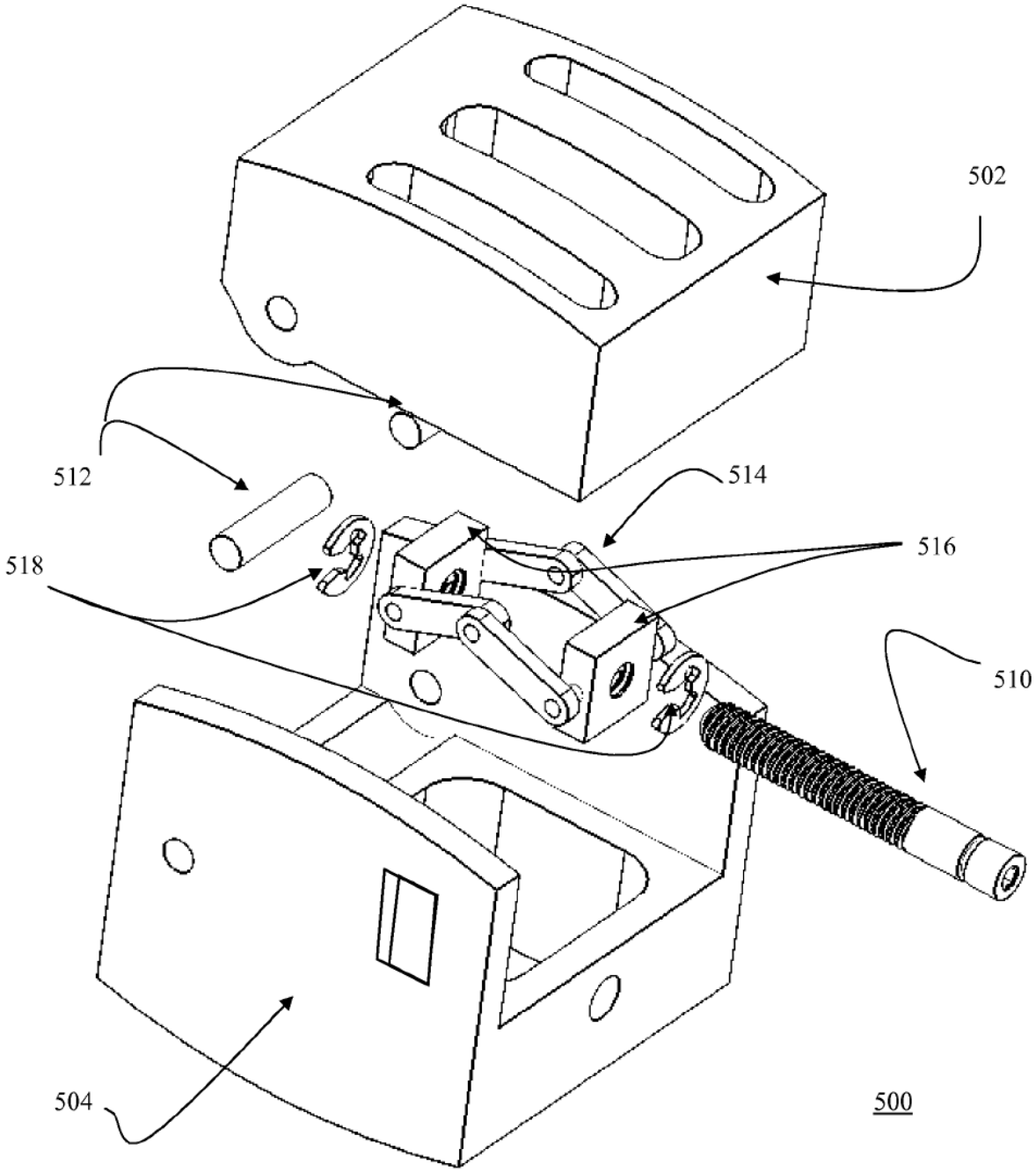

Fig. 5D

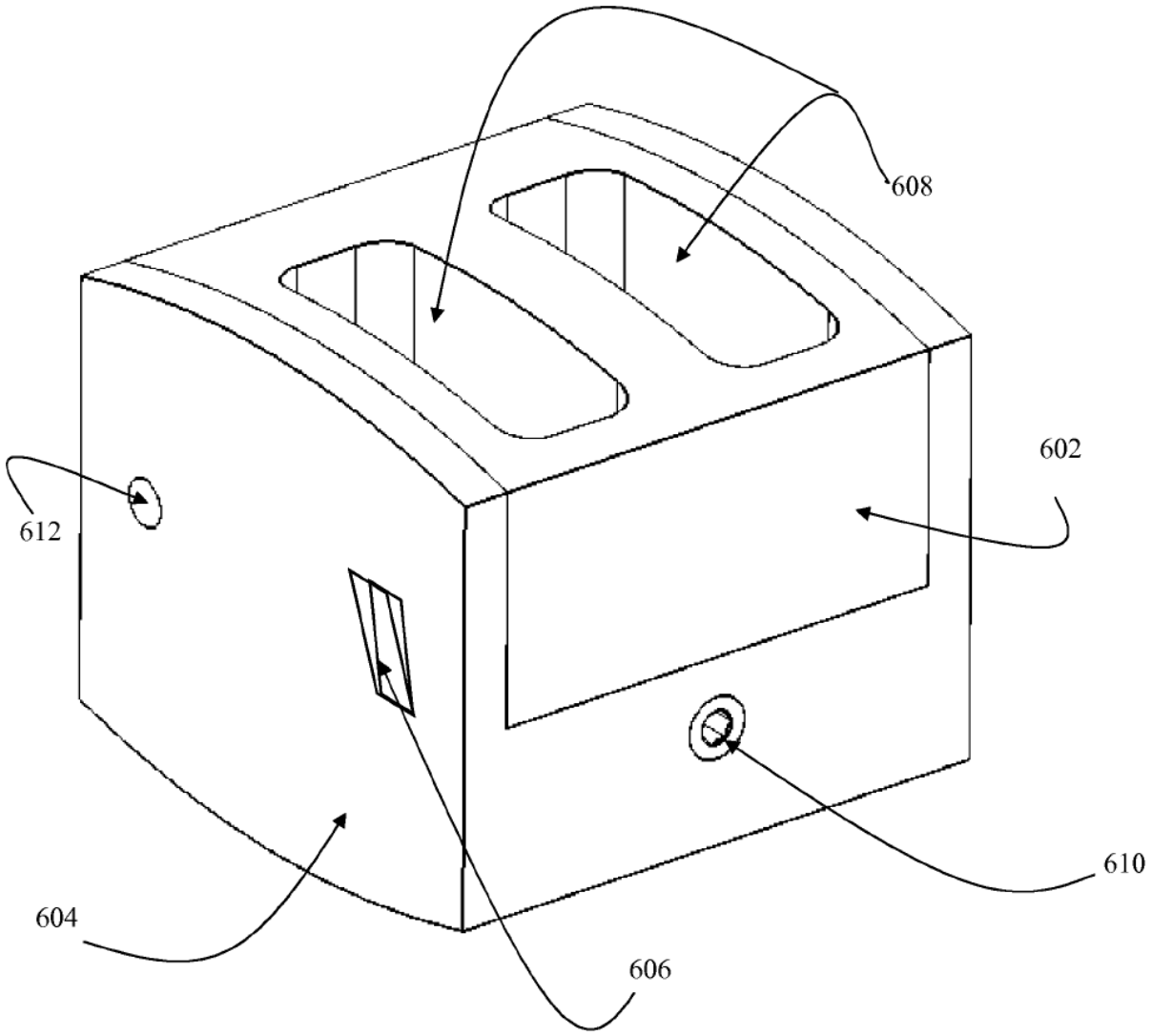

Fig. 6A

600

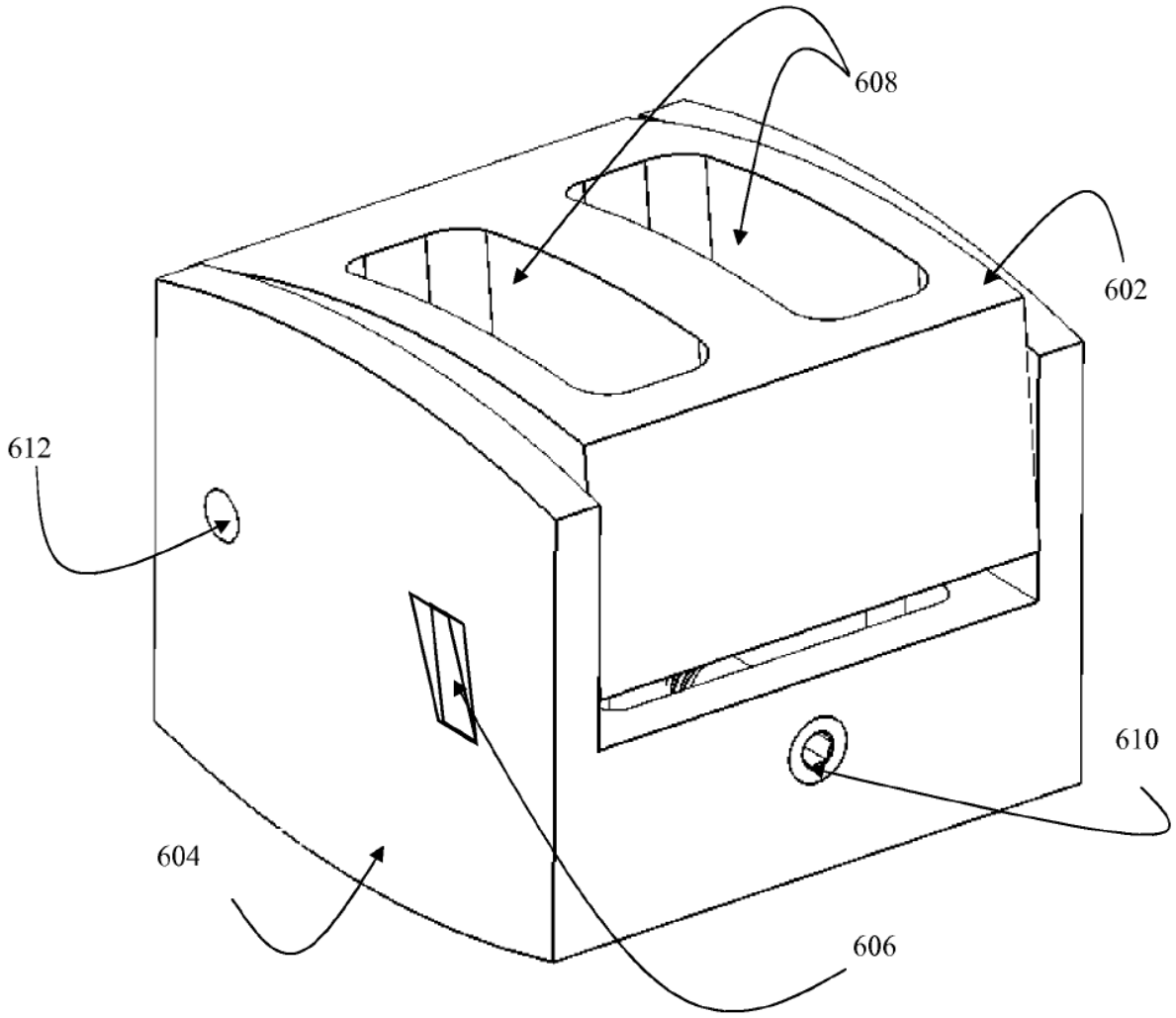

Fig. 6B

600

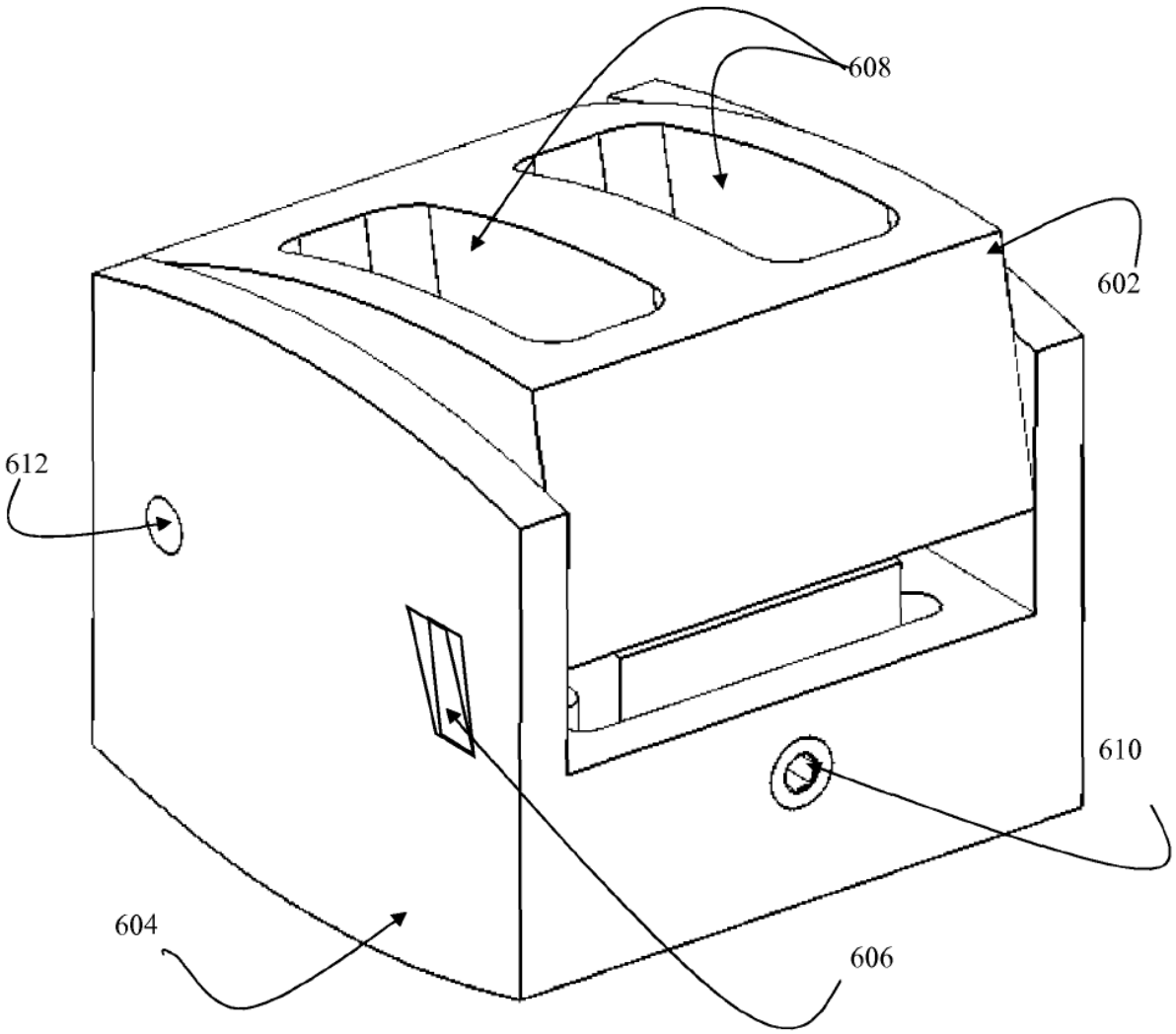

Fig. 6C

600

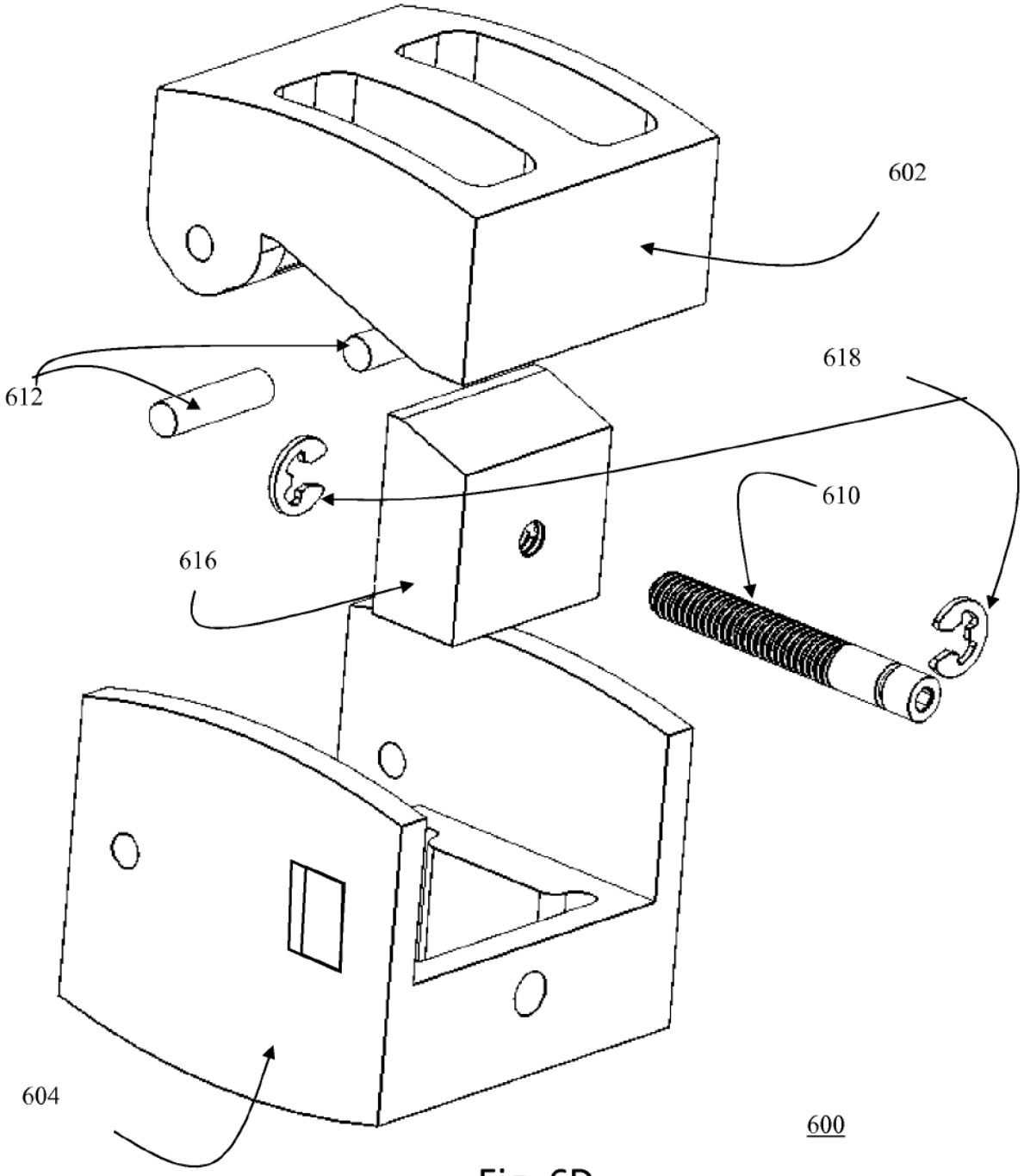

Fig. 6D

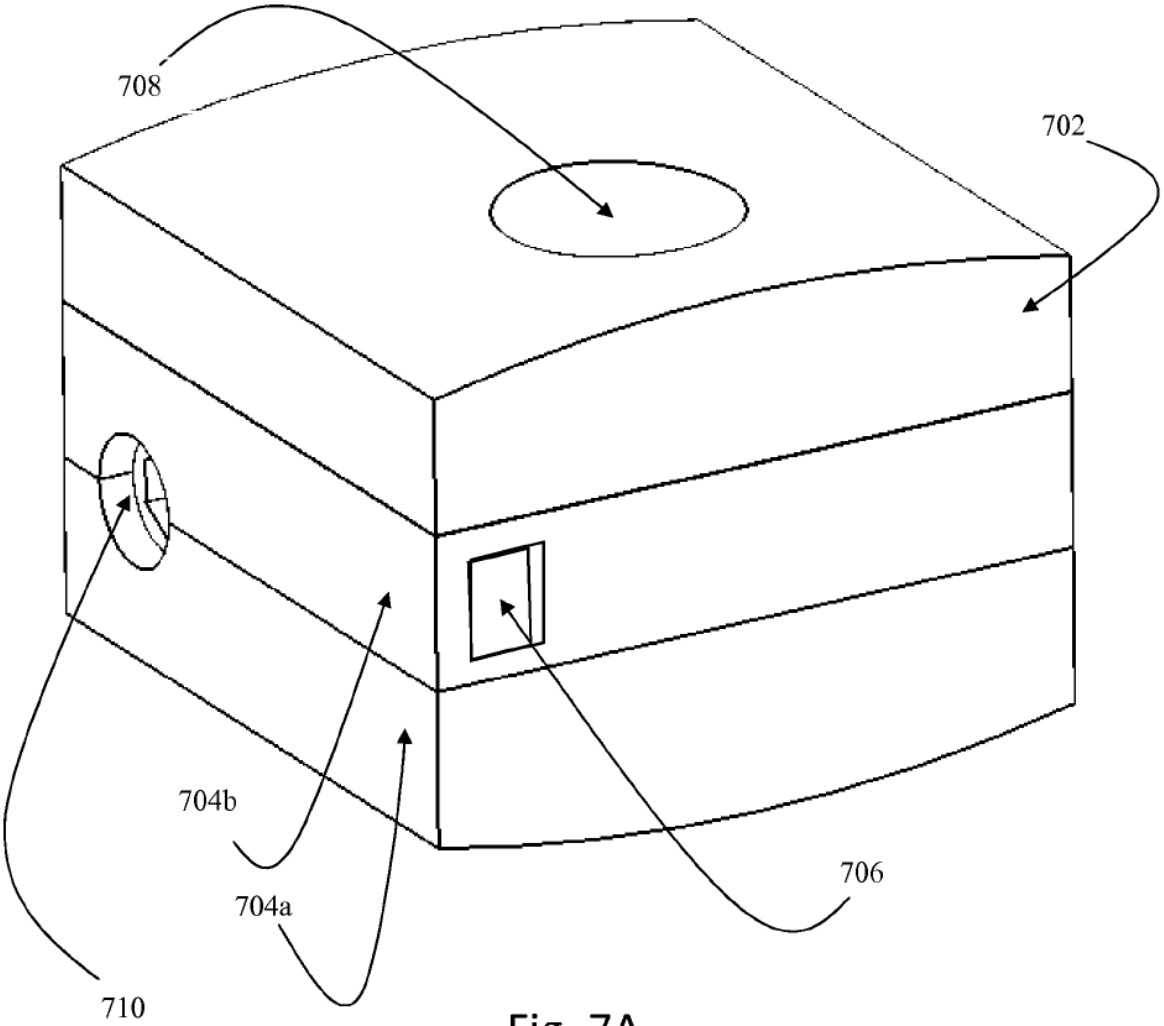

Fig. 7A

700

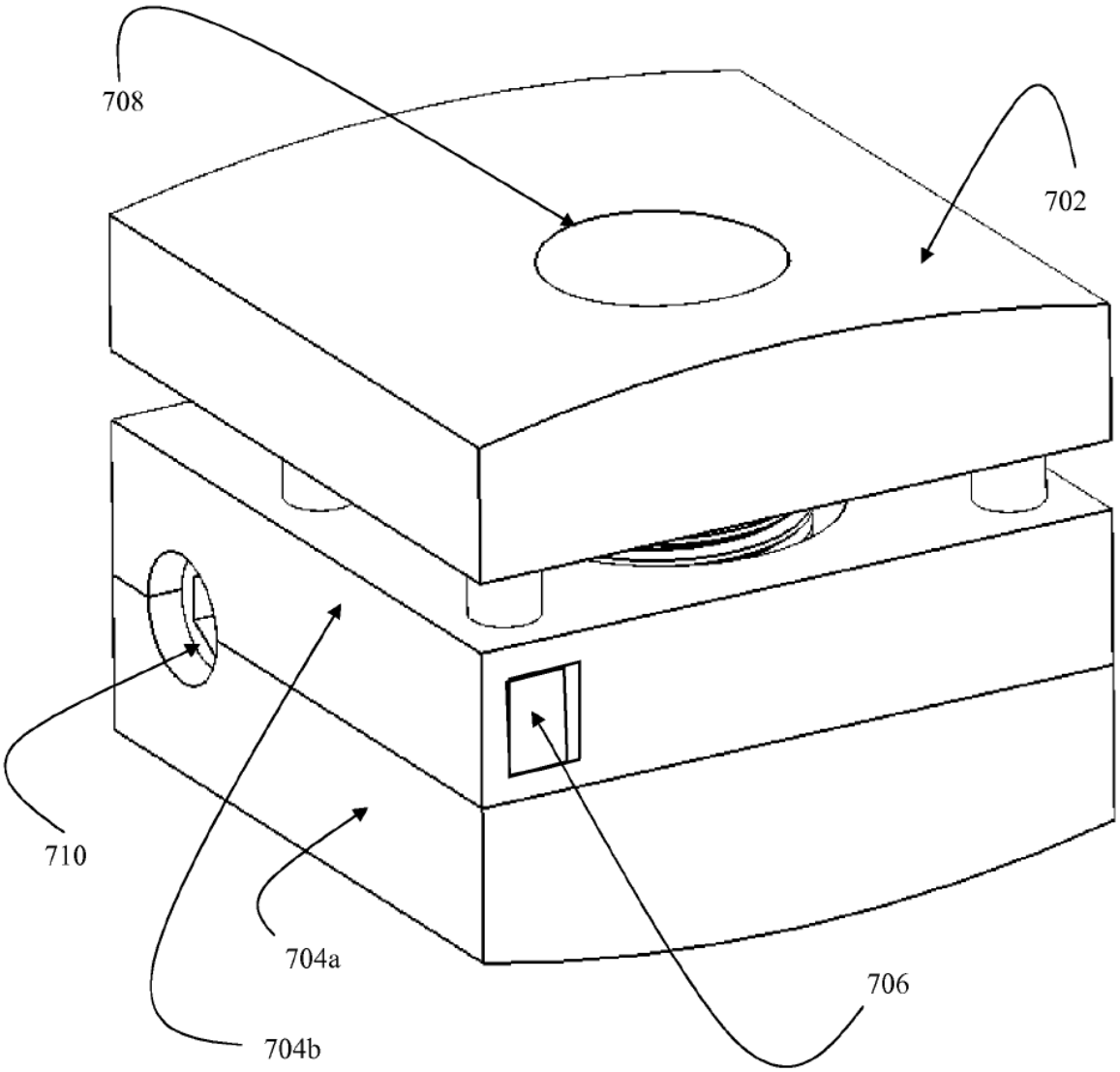

Fig. 7B

700

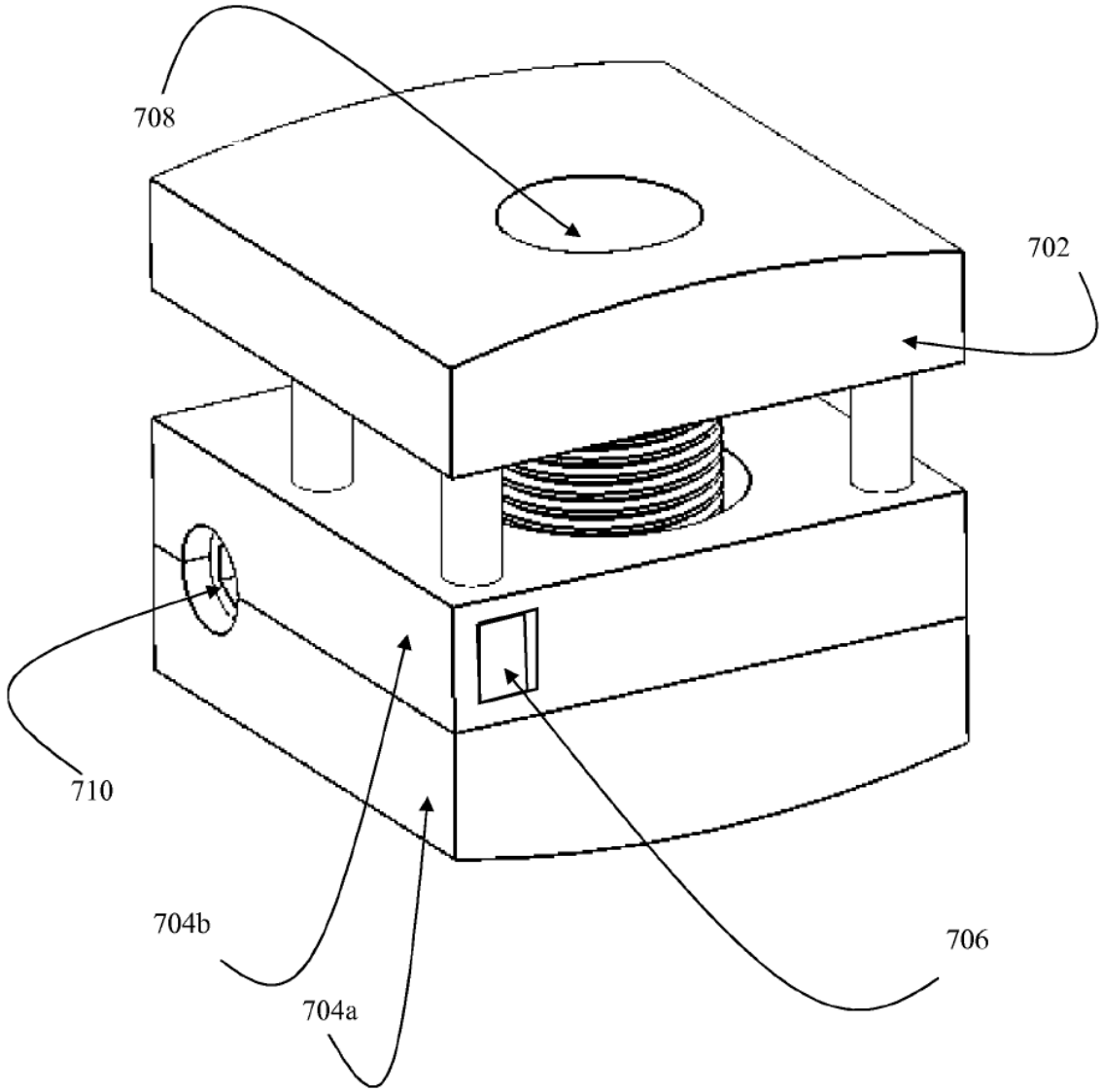

Fig. 7C

700

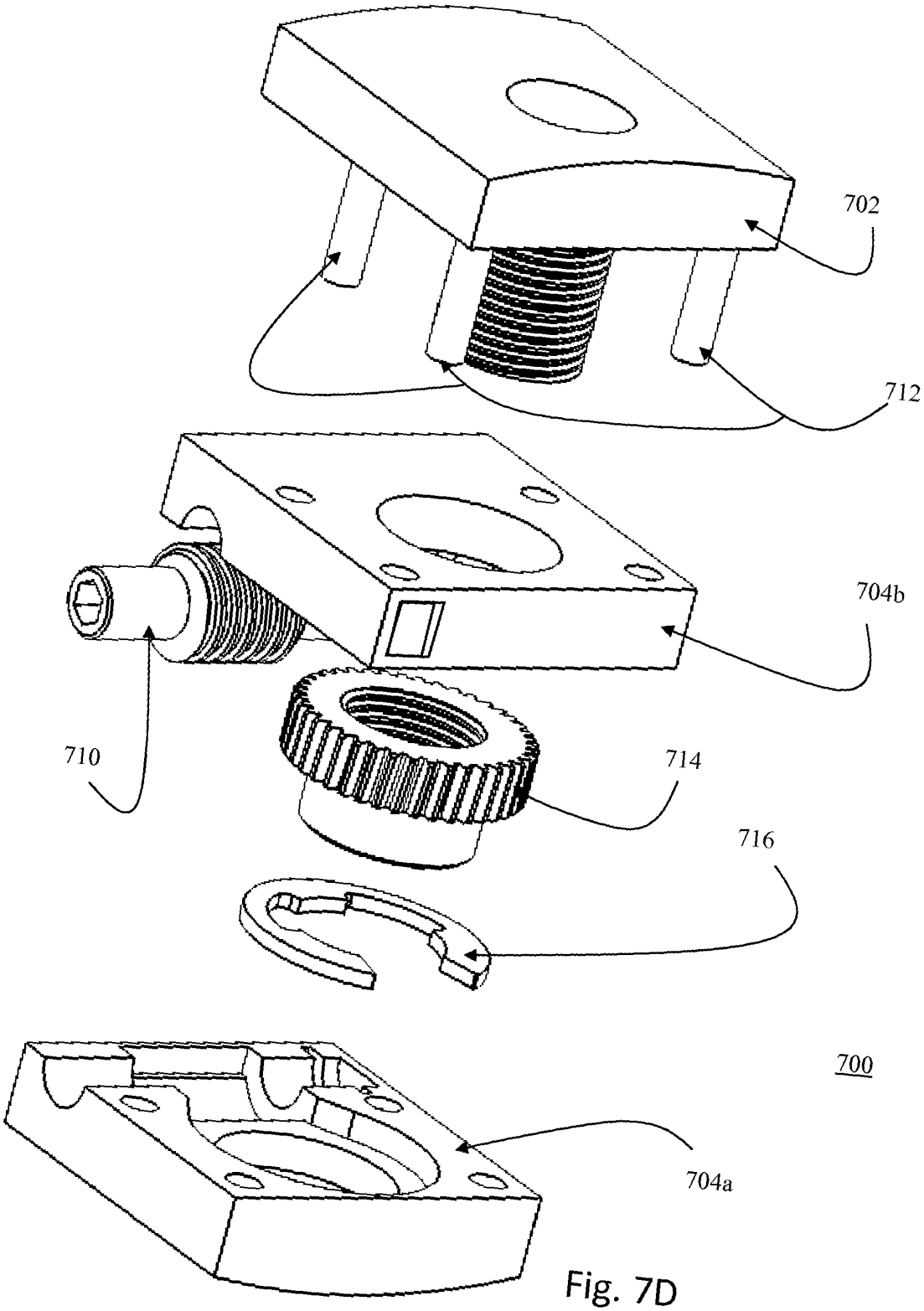

Fig. 7D

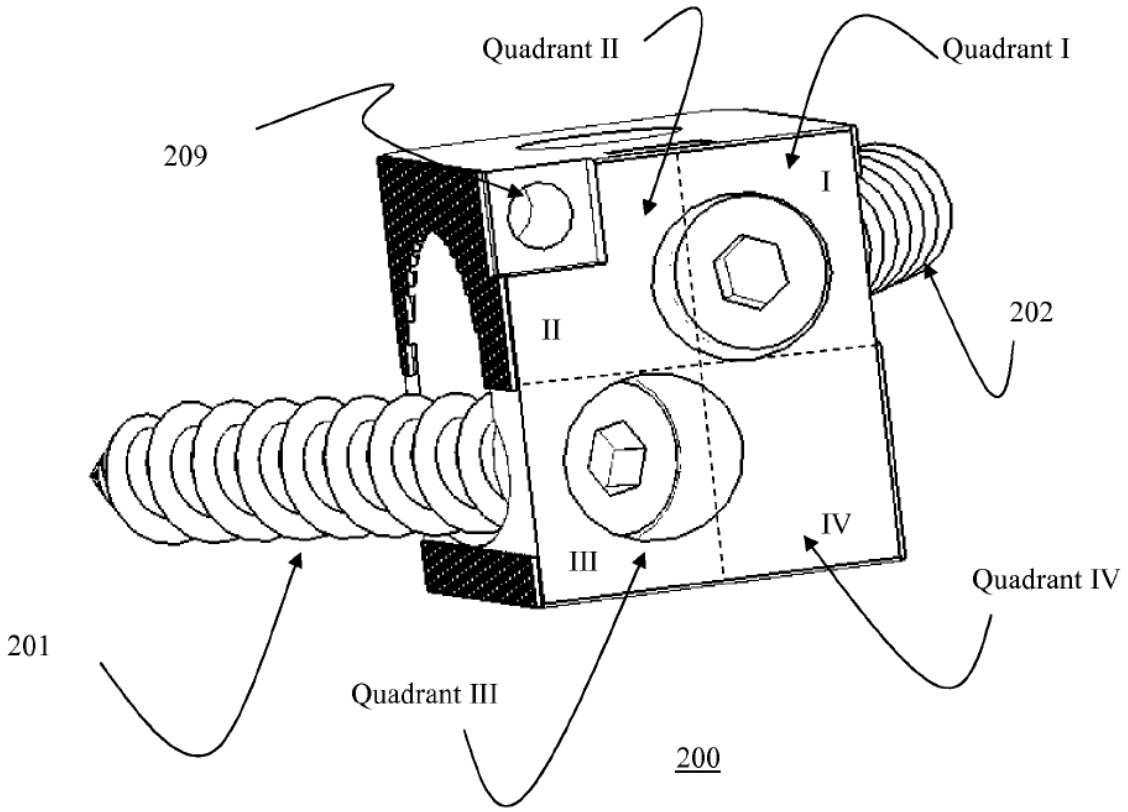
Quadrant II
Quadrant I
209
I
202
II
IV
III
Quadrant IV
201
Quadrant III
200

Fig. 7E(i)

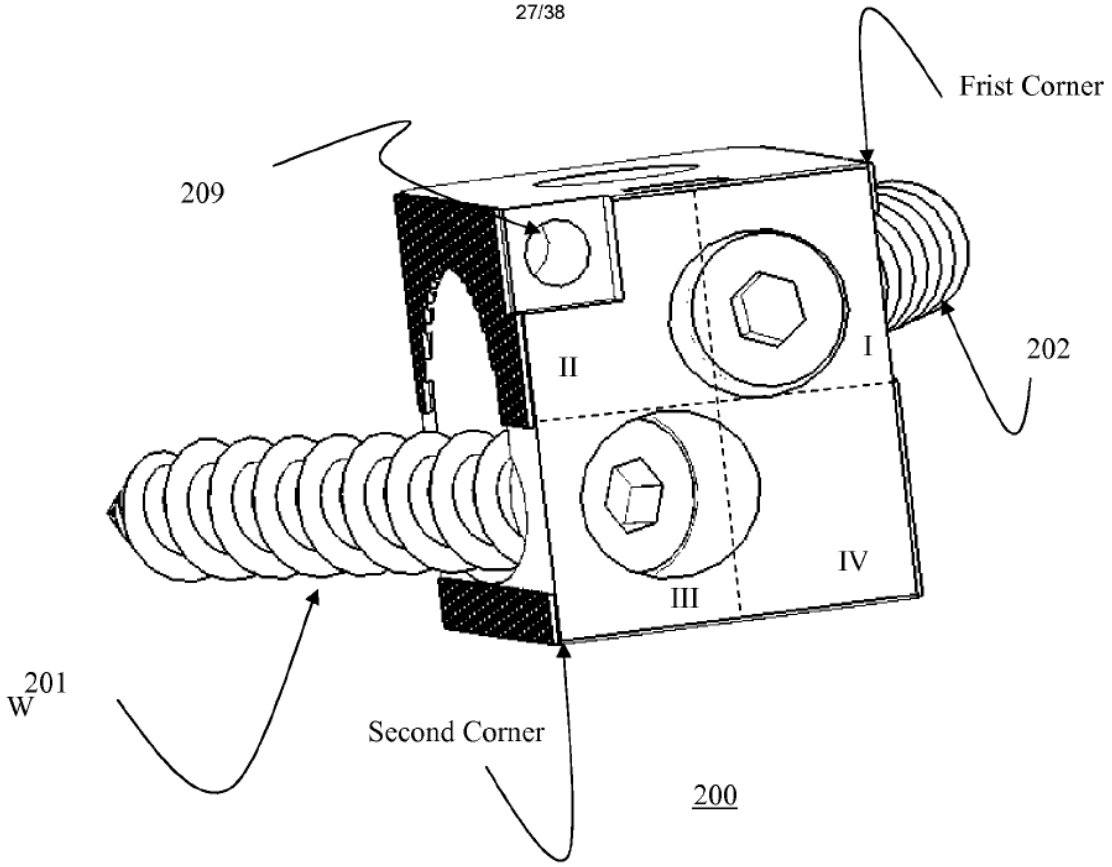

Fig. 7E(ii)

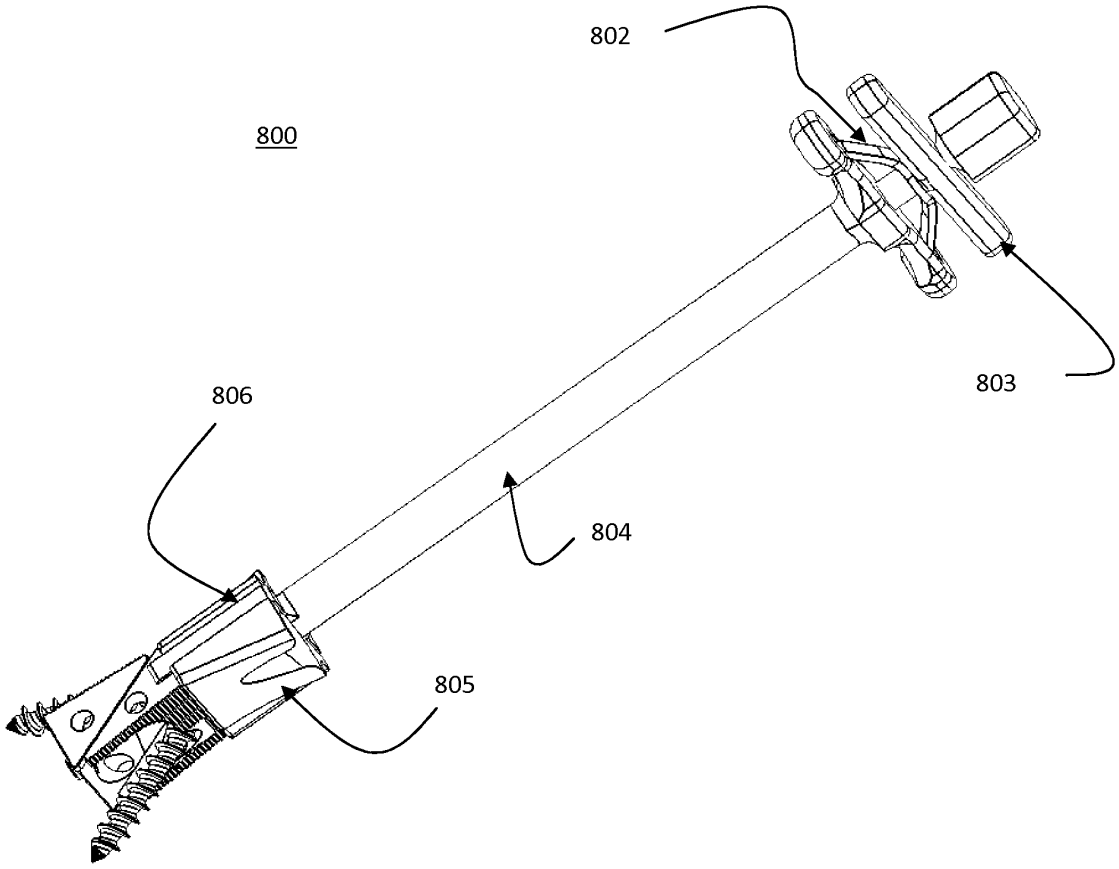

Fig. 8A

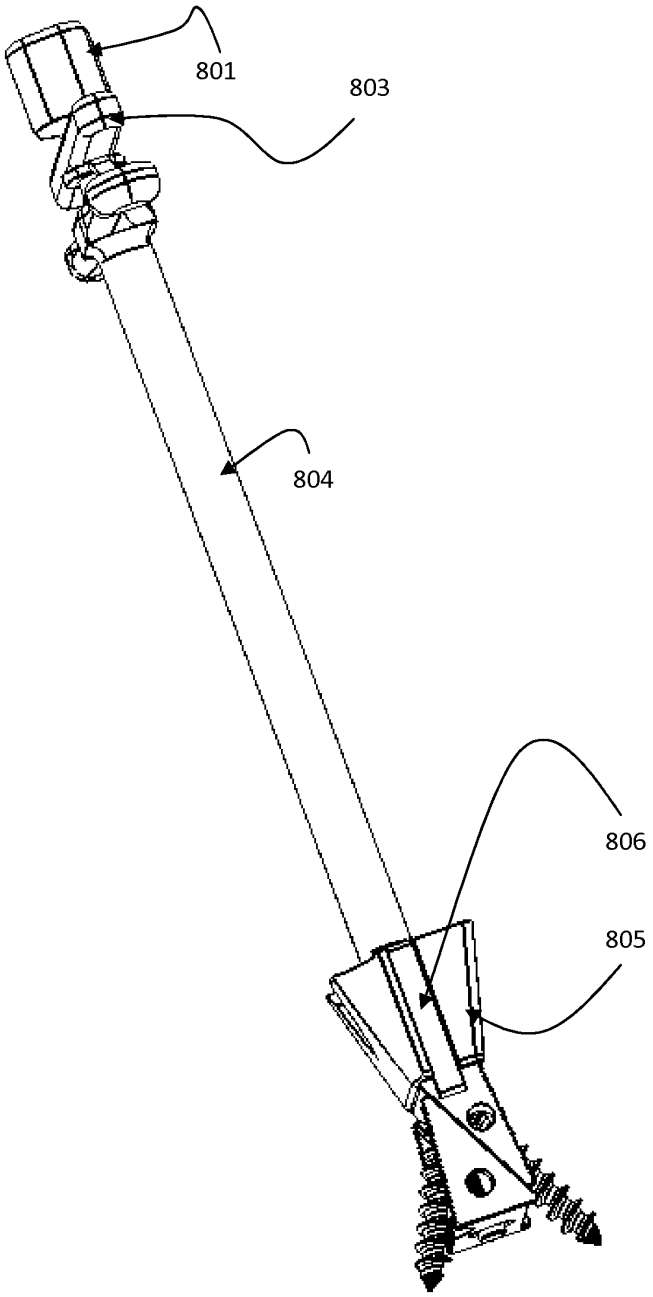

Fig. 8B

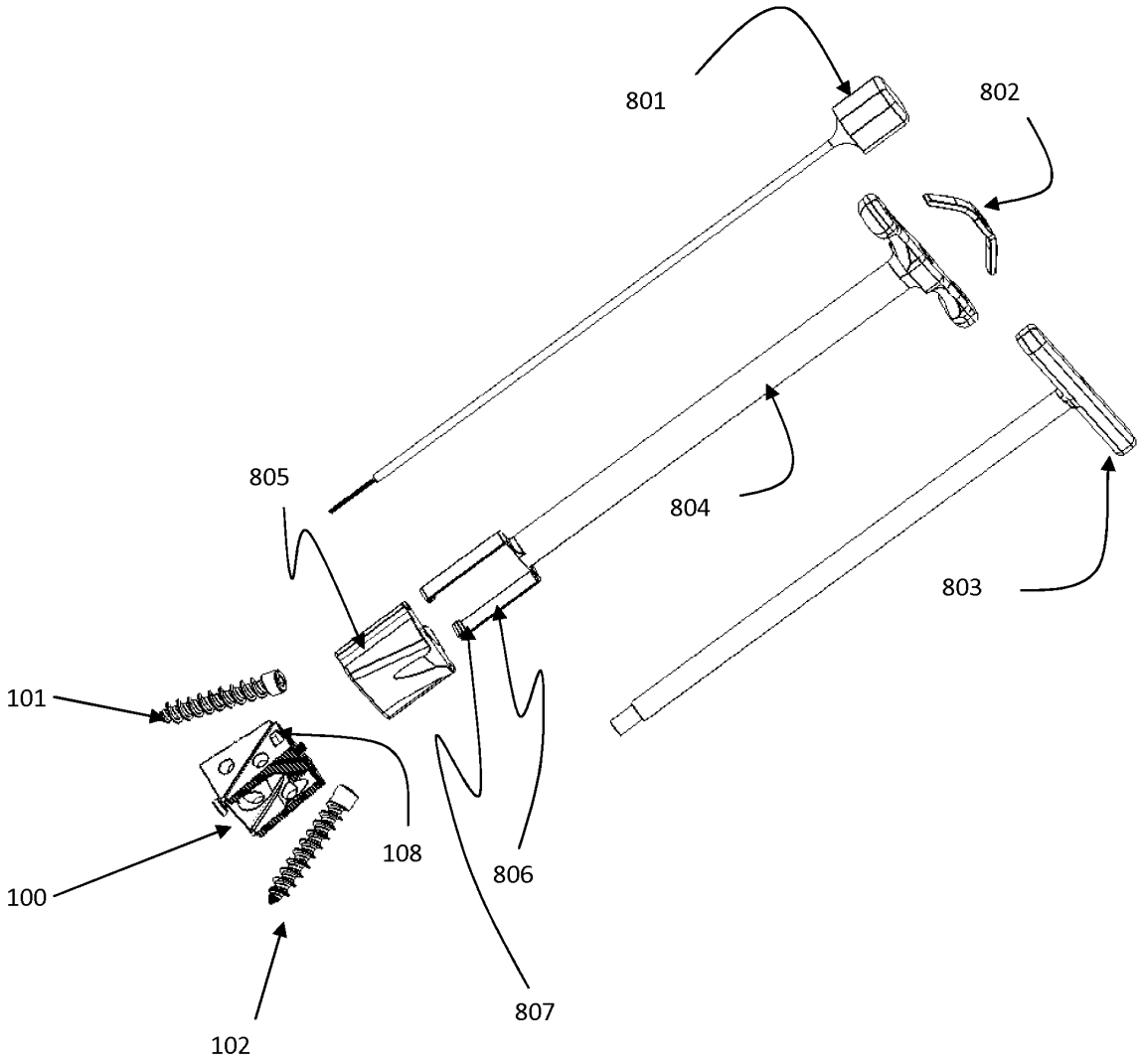

Fig. 8C

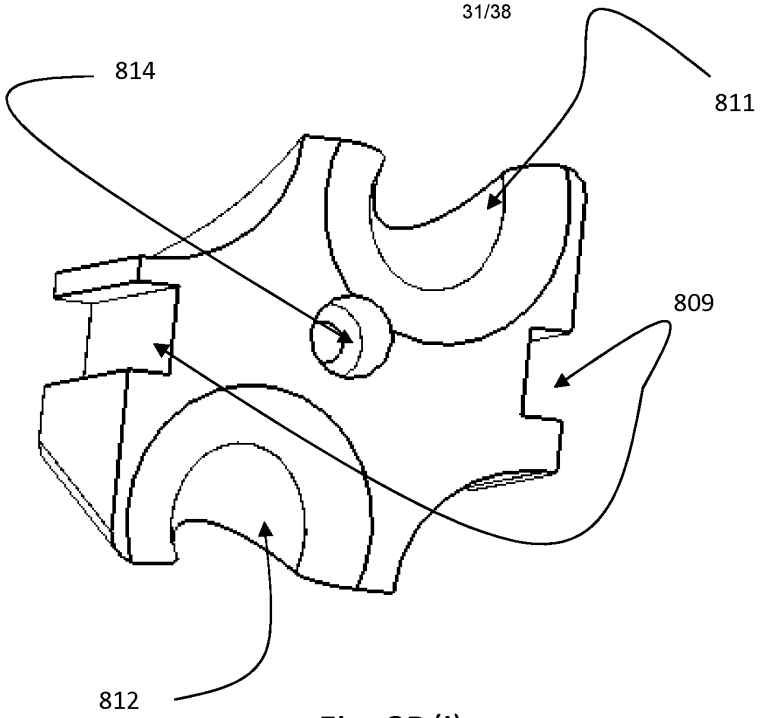

Fig. 8D(i)

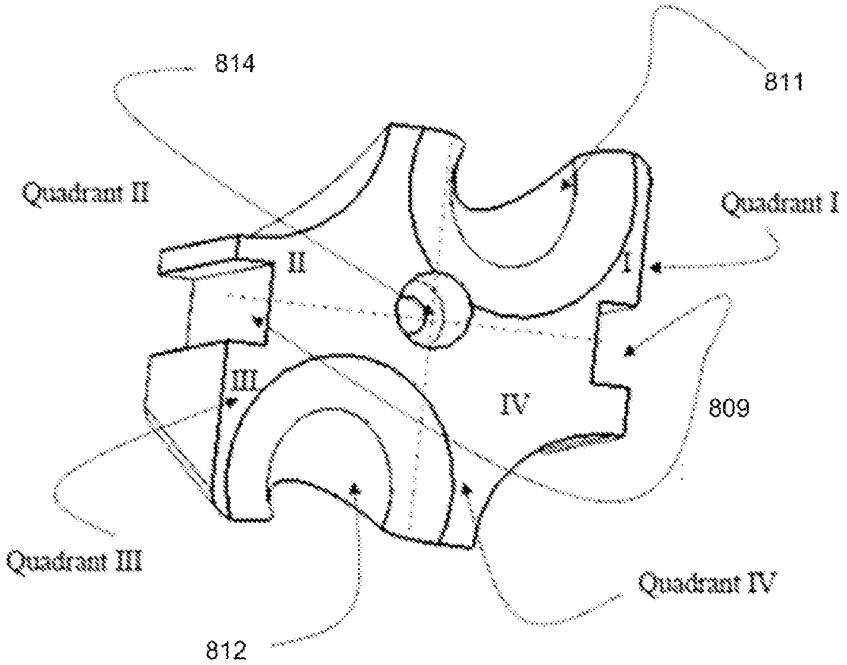

Fig. 8D(ii)

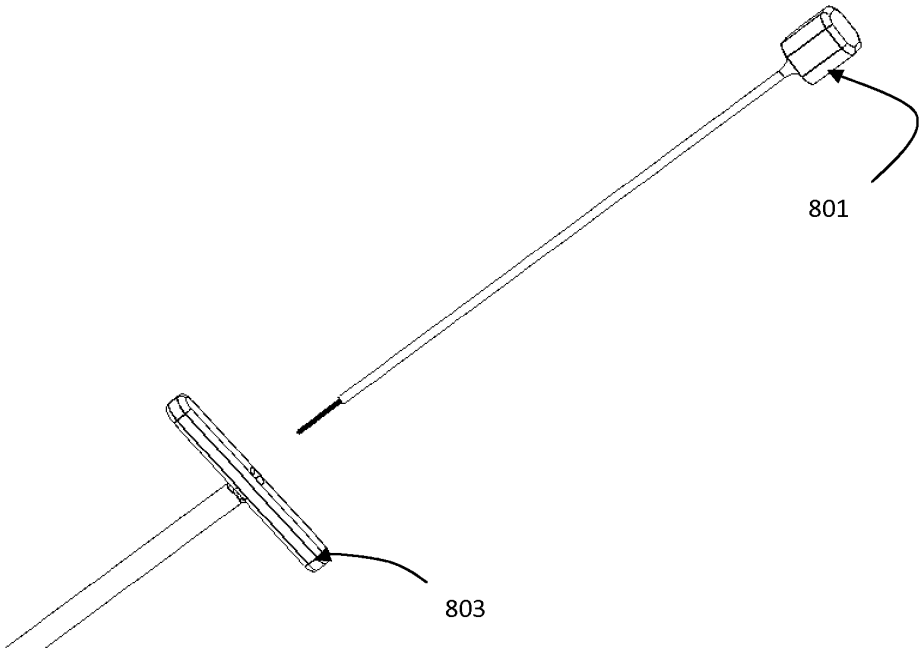

Fig. 8E

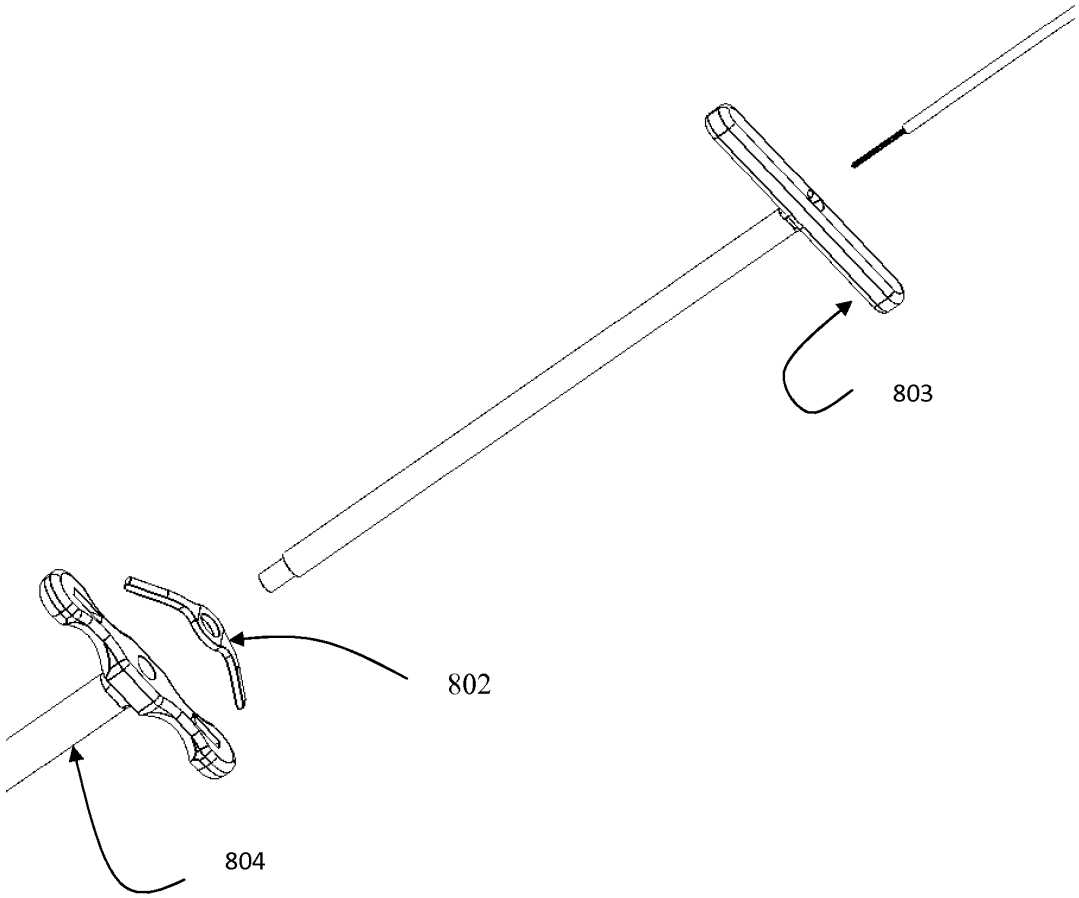

Fig. 8F

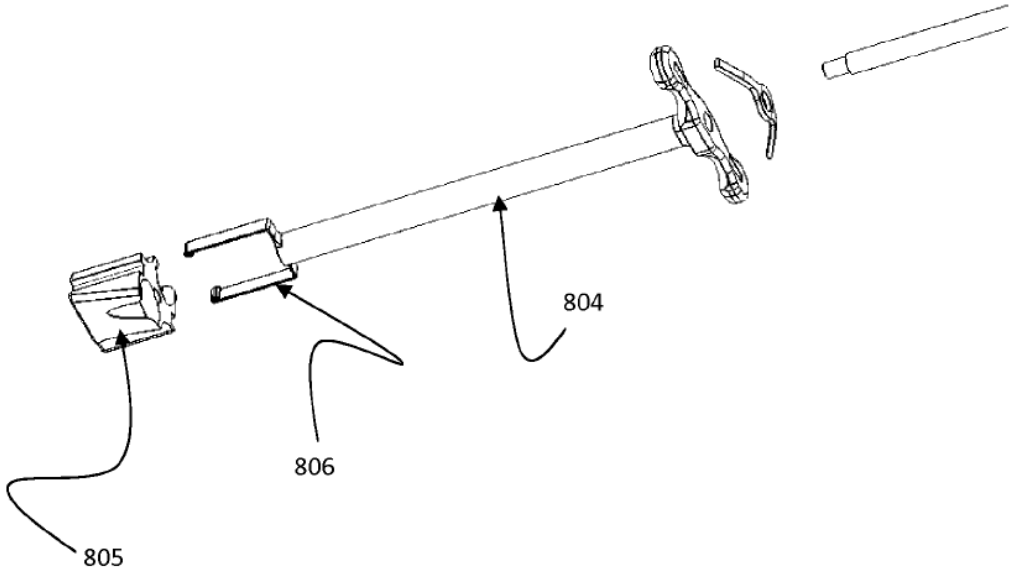

Fig. 8G

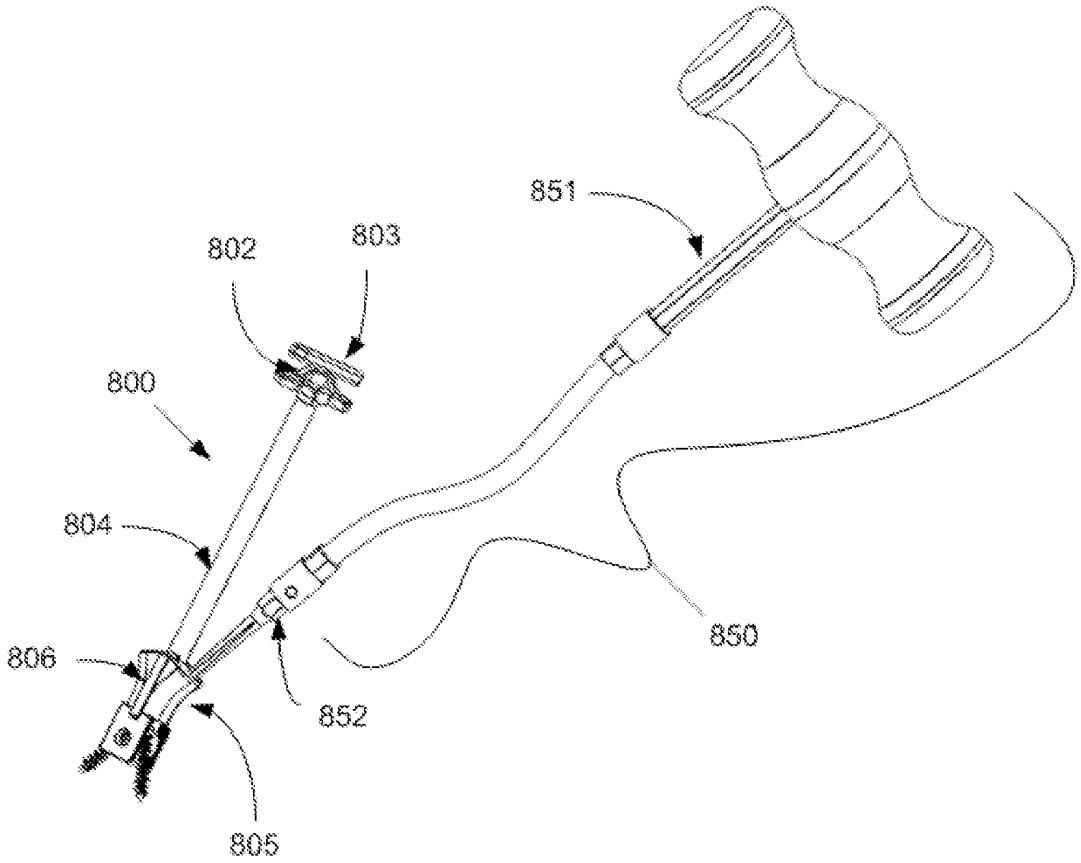

Fig. 8H

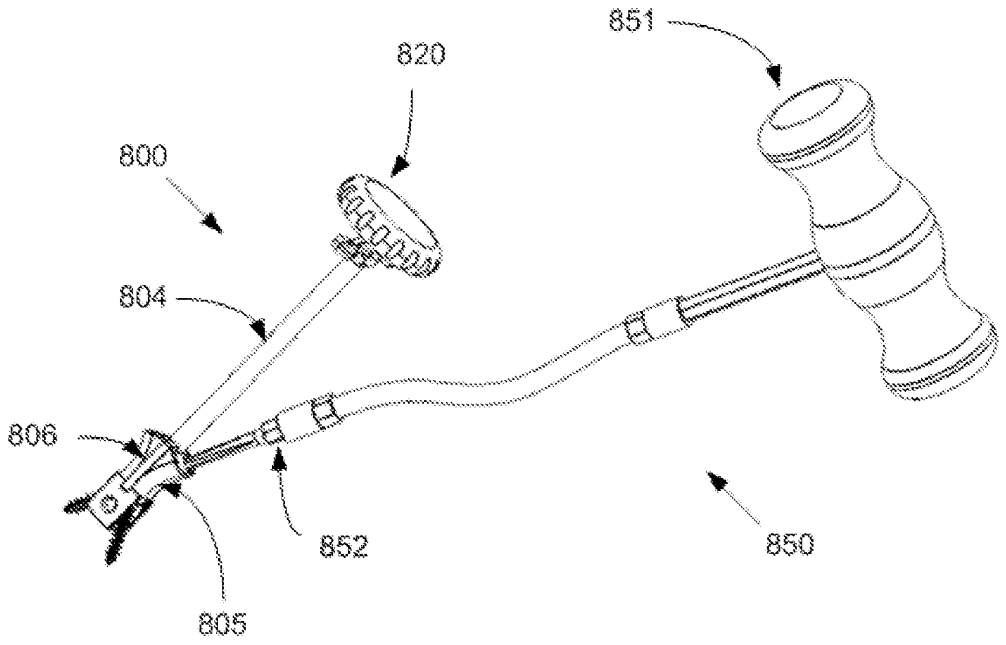

Fig. 8I

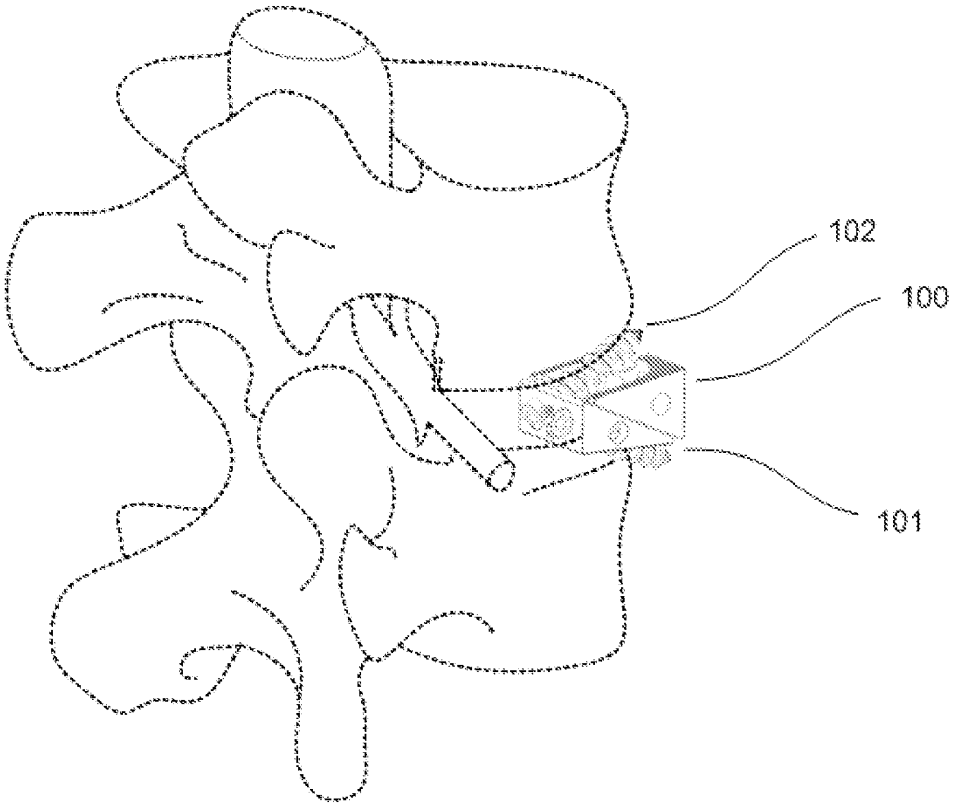

Fig. 8J

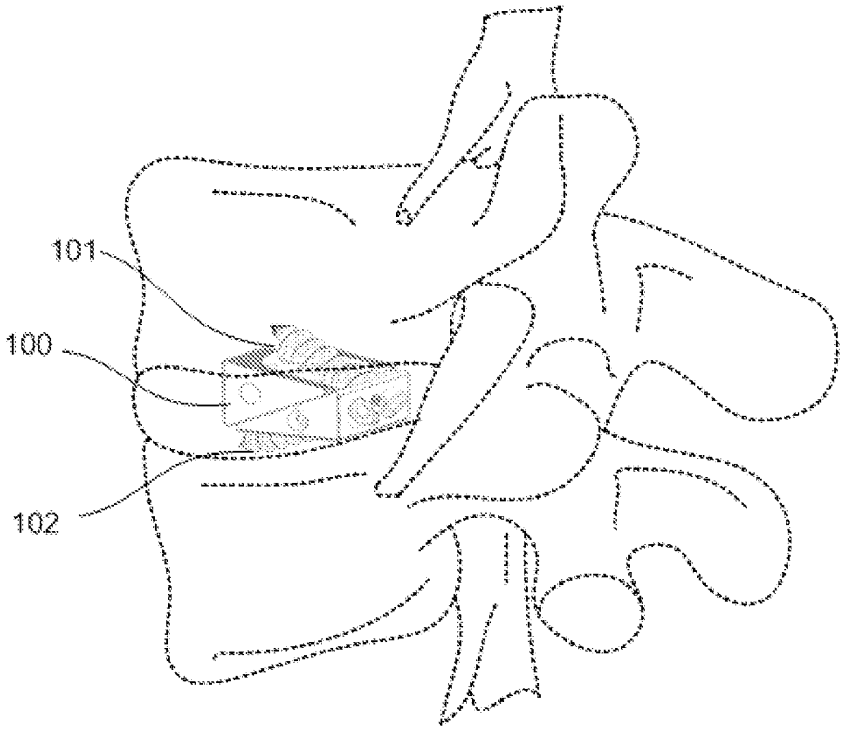

Fig. 8K

PTO/AIA/01 (06-12)
Approved for use through 01/31/2014. OMB 0651-0032
U.S. Patent and Trademark Office; U.S. DEPARTMENT OF COMMERCE
Under the Paperwork Reduction Act of 1995, no persons are required to respond to a collection of information unless it displays a valid OMB control number.

DECLARATION (37 CFR 1.63) FOR UTILITY OR DESIGN APPLICATION USING AN APPLICATION DATA SHEET (37 CFR 1.76)

Title of Invention	ZERO-PROFILE EXPANDABLE INTERVERTEBRAL SPACER DEVICES FOR DISTRACTION AND SPINAL FUSION AND A UNIVERSAL TOOL FOR THEIR PLACEMENT AND EXPANSION

As the below named inventor, I hereby declare that:

This declaration is directed to:

[ ] The attached application, or

[X] United States application or PCT international application number 14/063,197

filed on October 25, 2013.

The above-identified application was made or authorized to be made by me.

I believe that I am the original inventor or an original joint inventor of a claimed invention in the application.

I hereby acknowledge that any willful false statement made in this declaration is punishable under 18 U.S.C. 1001 by fine or imprisonment of not more than five (5) years, or both.

WARNING:

Petitioner/applicant is cautioned to avoid submitting personal information in documents filed in a patent application that may contribute to identity theft. Personal information such as social security numbers, bank account numbers, or credit card numbers (other than a check or credit card authorization form PTO-2038 submitted for payment purposes) is never required by the USPTO to support a petition or an application. If this type of personal information is included in documents submitted to the USPTO, petitioners/applicants should consider redacting such personal information from the documents before submitting them to the USPTO. Petitioner/applicant is advised that the record of a patent application is available to the public after publication of the application (unless a non-publication request in compliance with 37 CFR 1.213(a) is made in the application) or issuance of a patent. Furthermore, the record from an abandoned application may also be available to the public if the application is referenced in a published application or an issued patent (see 37 CFR 1.14). Checks and credit card authorization forms PTO-2038 submitted for payment purposes are not retained in the application file and therefore are not publicly available.

LEGAL NAME OF INVENTOR

Inventor: Ahmnon D. Moskowitz Date (Optional): 9/25/17

Signature: Ahmnon Moskowitz

Note: An application data sheet (PTO/SB/14 or equivalent), including naming the entire inventive entity, must accompany this form or must have been previously filed. Use an additional PTO/AIA/01 form for each additional inventor.

This collection of information is required by 35 U.S.C. 115 and 37 CFR 1.63. The information is required to obtain or retain a benefit by the public which is to file (and by the USPTO to process) an application. Confidentiality is governed by 35 U.S.C. 122 and 37 CFR 1.11 and 1.14. This collection is estimated to take 1 minute to complete, including gathering, preparing, and submitting the completed application form to the USPTO. Time will vary depending upon the individual case. Any comments on the amount of time you require to complete this form and/or suggestions for reducing this burden, should be sent to the Chief Information Officer, U.S. Patent and Trademark Office, U.S. Department of Commerce, P.O. Box 1450, Alexandria, VA 22313-1450. DO NOT SEND FEES OR COMPLETED FORMS TO THIS ADDRESS. **SEND TO: Commissioner for Patents, P.O. Box 1450, Alexandria, VA 22313-1450.**

If you need assistance in completing the form, call 1-800-PTO-9199 and select option 2.

61565955.doc

PTO/AIA/01 (06-12)
Approved for use through 01/31/2014. OMB 0651-0032
U.S. Patent and Trademark Office; U.S. DEPARTMENT OF COMMERCE
Under the Paperwork Reduction Act of 1995, no persons are required to respond to a collection of information unless it displays a valid OMB control number.

DECLARATION (37 CFR 1.63) FOR UTILITY OR DESIGN APPLICATION USING AN APPLICATION DATA SHEET (37 CFR 1.76)

Title of Invention	ZERO-PROFILE EXPANDABLE INTERVERTEBRAL SPACER DEVICES FOR DISTRACTION AND SPINAL FUSION AND A UNIVERSAL TOOL FOR THEIR PLACEMENT AND EXPANSION

As the below named inventor, I hereby declare that:

This declaration is directed to:

[ ] The attached application, or

[X] United States application or PCT international application number 14/063,197

filed on October 25, 2013.

The above-identified application was made or authorized to be made by me.

I believe that I am the original inventor or an original joint inventor of a claimed invention in the application.

I hereby acknowledge that any willful false statement made in this declaration is punishable under 18 U.S.C. 1001 by fine or imprisonment of not more than five (5) years, or both.

WARNING:

Petitioner/applicant is cautioned to avoid submitting personal information in documents filed in a patent application that may contribute to identity theft. Personal information such as social security numbers, bank account numbers, or credit card numbers (other than a check or credit card authorization form PTO-2038 submitted for payment purposes) is never required by the USPTO to support a petition or an application. If this type of personal information is included in documents submitted to the USPTO, petitioners/applicants should consider redacting such personal information from the documents before submitting them to the USPTO. Petitioner/applicant is advised that the record of a patent application is available to the public after publication of the application (unless a non-publication request in compliance with 37 CFR 1.213(a) is made in the application) or issuance of a patent. Furthermore, the record from an abandoned application may also be available to the public if the application is referenced in a published application or an issued patent (see 37 CFR 1.14). Checks and credit card authorization forms PTO-2038 submitted for payment purposes are not retained in the application file and therefore are not publicly available.

LEGAL NAME OF INVENTOR

Inventor: Mosheh T. Moskowitz Date (Optional): 11/24/13

Signature:

Note: An application data sheet (PTO/SB/14 or equivalent), including naming the entire inventive entity, must accompany this form or must have been previously filed. Use an additional PTO/AIA/01 form for each additional inventor.

This collection of information is required by 35 U.S.C. 115 and 37 CFR 1.63. The information is required to obtain or retain a benefit by the public which is to file (and by the USPTO to process) an application. Confidentiality is governed by 35 U.S.C. 122 and 37 CFR 1.11 and 1.14. This collection is estimated to take 1 minute to complete, including gathering, preparing, and submitting the completed application form to the USPTO. Time will vary depending upon the individual case. Any comments on the amount of time you require to complete this form and/or suggestions for reducing this burden, should be sent to the Chief Information Officer, U.S. Patent and Trademark Office, U.S. Department of Commerce, P.O. Box 1450, Alexandria, VA 22313-1450. DO NOT SEND FEES OR COMPLETED FORMS TO THIS ADDRESS. **SEND TO: Commissioner for Patents, P.O. Box 1450, Alexandria, VA 22313-1450.**

If you need assistance in completing the form, call 1-800-PTO-9199 and select option 2.

61565955.doc

PTO/AIA/01 (06-12)
Approved for use through 01/31/2014. OMB 0651-0032
U.S. Patent and Trademark Office; U.S. DEPARTMENT OF COMMERCE
Under the Paperwork Reduction Act of 1995, no persons are required to respond to a collection of information unless it displays a valid OMB control number.

DECLARATION (37 CFR 1.63) FOR UTILITY OR DESIGN APPLICATION USING AN APPLICATION DATA SHEET (37 CFR 1.76)

Title of Invention	ZERO-PROFILE EXPANDABLE INTERVERTEBRAL SPACER DEVICES FOR DISTRACTION AND SPINAL FUSION AND A UNIVERSAL TOOL FOR THEIR PLACEMENT AND EXPANSION

As the below named inventor, I hereby declare that:

This declaration is directed to:

[ ] The attached application, or

[X] United States application or PCT international application number 14/063,197

filed on October 25, 2013.

The above-identified application was made or authorized to be made by me.

I believe that I am the original inventor or an original joint inventor of a claimed invention in the application.

I hereby acknowledge that any willful false statement made in this declaration is punishable under 18 U.S.C. 1001 by fine or imprisonment of not more than five (5) years, or both.

WARNING:

Petitioner/applicant is cautioned to avoid submitting personal information in documents filed in a patent application that may contribute to identity theft. Personal information such as social security numbers, bank account numbers, or credit card numbers (other than a check or credit card authorization form PTO-2038 submitted for payment purposes) is never required by the USPTO to support a petition or an application. If this type of personal information is included in documents submitted to the USPTO, petitioners/applicants should consider redacting such personal information from the documents before submitting them to the USPTO. Petitioner/applicant is advised that the record of a patent application is available to the public after publication of the application (unless a non-publication request in compliance with 37 CFR 1.213(a) is made in the application) or issuance of a patent. Furthermore, the record from an abandoned application may also be available to the public if the application is referenced in a published application or an issued patent (see 37 CFR 1.14). Checks and credit card authorization forms PTO-2038 submitted for payment purposes are not retained in the application file and therefore are not publicly available.

LEGAL NAME OF INVENTOR

Inventor: Pablo A. Valdivia Y. Alvarado Date (Optional): OCT-10-2017

Signature:

Note: An application data sheet (PTO/SB/14 or equivalent), including naming the entire inventive entity, must accompany this form or must have been previously filed. Use an additional PTO/AIA/01 form for each additional inventor.

This collection of information is required by 35 U.S.C. 115 and 37 CFR 1.63. The information is required to obtain or retain a benefit by the public which is to file (and by the USPTO to process) an application. Confidentiality is governed by 35 U.S.C. 122 and 37 CFR 1.11 and 1.14. This collection is estimated to take 1 minute to complete, including gathering, preparing, and submitting the completed application form to the USPTO. Time will vary depending upon the individual case. Any comments on the amount of time you require to complete this form and/or suggestions for reducing this burden, should be sent to the Chief Information Officer, U.S. Patent and Trademark Office, U.S. Department of Commerce, P.O. Box 1450, Alexandria, VA 22313-1450. DO NOT SEND FEES OR COMPLETED FORMS TO THIS ADDRESS. **SEND TO: Commissioner for Patents, P.O. Box 1450, Alexandria, VA 22313-1450.**

If you need assistance in completing the form, call 1-800-PTO-9199 and select option 2.

61565955.doc

PTO/AIA/01 (06-12)
Approved for use through 01/31/2014. OMB 0651-0032
U.S. Patent and Trademark Office; U.S. DEPARTMENT OF COMMERCE
Under the Paperwork Reduction Act of 1995, no persons are required to respond to a collection of information unless it displays a valid OMB control number.

DECLARATION (37 CFR 1.63) FOR UTILITY OR DESIGN APPLICATION USING AN APPLICATION DATA SHEET (37 CFR 1.76)

Title of Invention	ZERO-PROFILE EXPANDABLE INTERVERTEBRAL SPACER DEVICES FOR DISTRACTION AND SPINAL FUSION AND A UNIVERSAL TOOL FOR THEIR PLACEMENT AND EXPANSION

As the below named inventor, I hereby declare that:

This declaration is directed to:

[ ] The attached application, or

[X] United States application or PCT international application number 14/063,197

filed on October 25, 2013.

The above-identified application was made or authorized to be made by me.

I believe that I am the original inventor or an original joint inventor of a claimed invention in the application.

I hereby acknowledge that any willful false statement made in this declaration is punishable under 18 U.S.C. 1001 by fine or imprisonment of not more than five (5) years, or both.

WARNING:

Petitioner/applicant is cautioned to avoid submitting personal information in documents filed in a patent application that may contribute to identity theft. Personal information such as social security numbers, bank account numbers, or credit card numbers (other than a check or credit card authorization form PTO-2038 submitted for payment purposes) is never required by the USPTO to support a petition or an application. If this type of personal information is included in documents submitted to the USPTO, petitioners/applicants should consider redacting such personal information from the documents before submitting them to the USPTO. Petitioner/applicant is advised that the record of a patent application is available to the public after publication of the application (unless a non-publication request in compliance with 37 CFR 1.213(a) is made in the application) or issuance of a patent. Furthermore, the record from an abandoned application may also be available to the public if the application is referenced in a published application or an issued patent (see 37 CFR 1.14). Checks and credit card authorization forms PTO-2038 submitted for payment purposes are not retained in the application file and therefore are not publicly available.

LEGAL NAME OF INVENTOR

Inventor: Eric Sugalski Eric Sugalski Date (Optional): 09 / 27 / 2017

Signature:

Note: An application data sheet (PTO/SB/14 or equivalent), including naming the entire inventive entity, must accompany this form or must have been previously filed. Use an additional PTO/AIA/01 form for each additional inventor.

This collection of information is required by 35 U.S.C. 115 and 37 CFR 1.63. The information is required to obtain or retain a benefit by the public which is to file (and by the USPTO to process) an application. Confidentiality is governed by 35 U.S.C. 122 and 37 CFR 1.11 and 1.14. This collection is estimated to take 1 minute to complete, including gathering, preparing, and submitting the completed application form to the USPTO. Time will vary depending upon the individual case. Any comments on the amount of time you require to complete this form and/or suggestions for reducing this burden, should be sent to the Chief Information Officer, U.S. Patent and Trademark Office, U.S. Department of Commerce, P.O. Box 1450, Alexandria, VA 22313-1450. DO NOT SEND FEES OR COMPLETED FORMS TO THIS ADDRESS. **SEND TO: Commissioner for Patents, P.O. Box 1450, Alexandria, VA 22313-1450.**

If you need assistance in completing the form, call 1-800-PTO-9199 and select option 2.

61565955.doc

PTO/AIA/01 (06-12)
Approved for use through 01/31/2014. OMB 0651-0032
U.S. Patent and Trademark Office; U.S. DEPARTMENT OF COMMERCE
Under the Paperwork Reduction Act of 1995, no persons are required to respond to a collection of information unless it displays a valid OMB control number.

DECLARATION (37 CFR 1.63) FOR UTILITY OR DESIGN APPLICATION USING AN APPLICATION DATA SHEET (37 CFR 1.76)

Title of Invention	ZERO-PROFILE EXPANDABLE INTERVERTEBRAL SPACER DEVICES FOR DISTRACTION AND SPINAL FUSION AND A UNIVERSAL TOOL FOR THEIR PLACEMENT AND EXPANSION

As the below named inventor, I hereby declare that:

This declaration is directed to:

[ ] The attached application, or

[X] United States application or PCT international application number 14/063,197

filed on October 25, 2013.

The above-identified application was made or authorized to be made by me.

I believe that I am the original inventor or an original joint inventor of a claimed invention in the application.

I hereby acknowledge that any willful false statement made in this declaration is punishable under 18 U.S.C. 1001 by fine or imprisonment of not more than five (5) years, or both.

WARNING:

Petitioner/applicant is cautioned to avoid submitting personal information in documents filed in a patent application that may contribute to identity theft. Personal information such as social security numbers, bank account numbers, or credit card numbers (other than a check or credit card authorization form PTO-2038 submitted for payment purposes) is never required by the USPTO to support a petition or an application. If this type of personal information is included in documents submitted to the USPTO, petitioners/applicants should consider redacting such personal information from the documents before submitting them to the USPTO. Petitioner/applicant is advised that the record of a patent application is available to the public after publication of the application (unless a non-publication request in compliance with 37 CFR 1.213(a) is made in the application) or issuance of a patent. Furthermore, the record from an abandoned application may also be available to the public if the application is referenced in a published application or an issued patent (see 37 CFR 1.14). Checks and credit card authorization forms PTO-2038 submitted for payment purposes are not retained in the application file and therefore are not publicly available.

LEGAL NAME OF INVENTOR

Inventor: Nathan C. Moskowitz Date (Optional): 9/25/17

Signature: Nathan C. Moskowitz

Note: An application data sheet (PTO/SB/14 or equivalent), including naming the entire inventive entity, must accompany this form or must have been previously filed. Use an additional PTO/AIA/01 form for each additional inventor.

This collection of information is required by 35 U.S.C. 115 and 37 CFR 1.63. The information is required to obtain or retain a benefit by the public which is to file (and by the USPTO to process) an application. Confidentiality is governed by 35 U.S.C. 122 and 37 CFR 1.11 and 1.14. This collection is estimated to take 1 minute to complete, including gathering, preparing, and submitting the completed application form to the USPTO. Time will vary depending upon the individual case. Any comments on the amount of time you require to complete this form and/or suggestions for reducing this burden, should be sent to the Chief Information Officer, U.S. Patent and Trademark Office, U.S. Department of Commerce, P.O. Box 1450, Alexandria, VA 22313-1450. DO NOT SEND FEES OR COMPLETED FORMS TO THIS ADDRESS. **SEND TO: Commissioner for Patents, P.O. Box 1450, Alexandria, VA 22313-1450.**

If you need assistance in completing the form, call 1-800-PTO-9199 and select option 2.

61565955.doc

Electronic Patent Application Fee Transmittal

Application Number:	
Filing Date:	
Title of Invention:	ZERO-PROFILE EXPANDABLE INTERVERTEBRAL SPACER DEVICES FOR DISTRACTION AND SPINAL FUSION AND A UNIVERSAL TOOL FOR THEIR PLACEMENT AND EXPANSION
First Named Inventor/Applicant Name:	Ahmnon D. Moskowitz
Filer:	Stuart A. Nelson/Lisa Gray
Attorney Docket Number:	45335-0020002

Filed as Small Entity

Filing Fees for Track I Prioritized Examination - Nonprovisional Application under 35 USC 111(a)

Description	Fee Code	Quantity	Amount	Sub-Total in USD($)
Basic Filing:				
UTILITY FILING FEE (ELECTRONIC FILING)	4011	1	70	70
UTILITY SEARCH FEE	2111	1	300	300
UTILITY EXAMINATION FEE	2311	1	360	360
REQUEST FOR PRIORITIZED EXAMINATION	2817	1	2000	2000
Pages:				
Claims:				
Miscellaneous-Filing:				
PROCESSING FEE, EXCEPT PROV. APPLS.	2830	1	70	70

Description	Fee Code	Quantity	Amount	Sub-Total in USD($)
Petition:				
Patent-Appeals-and-Interference:				
Post-Allowance-and-Post-Issuance:				
Extension-of-Time:				
Miscellaneous:				
			Total in USD ($)	**2800**

Electronic Acknowledgement Receipt	
EFS ID:	31021730
Application Number:	15820232
International Application Number:	
Confirmation Number:	1007
Title of Invention:	ZERO-PROFILE EXPANDABLE INTERVERTEBRAL SPACER DEVICES FOR DISTRACTION AND SPINAL FUSION AND A UNIVERSAL TOOL FOR THEIR PLACEMENT AND EXPANSION
First Named Inventor/Applicant Name:	Ahmnon D. Moskowitz
Customer Number:	26191
Filer:	Stuart A. Nelson/Lisa Gray
Filer Authorized By:	Stuart A. Nelson
Attorney Docket Number:	45335-0020002
Receipt Date:	21-NOV-2017
Filing Date:	
Time Stamp:	18:55:49
Application Type:	Utility under 35 USC 111(a)

Payment information:

Submitted with Payment	yes
Payment Type	DA
Payment was successfully received in RAM	$2800
RAM confirmation Number	112217INTEFSW00007094061050
Deposit Account	
Authorized User	
The Director of the USPTO is hereby authorized to charge indicated fees and credit any overpayment as follows:	

File Listing:

Document Number	Document Description	File Name	File Size(Bytes)/ Message Digest	Multi Part /.zip	Pages (if appl.)
1	TrackOne Request	45335-0020002track1request.pdf	149593 5d85b76d587e2d9cb97f41fa47ef936ca04ae5db	no	2
Warnings:					
Information:					
2	Transmittal of New Application	45335-0020002transmittal.pdf	115486 d6c7f43f4c45d322896e65360c62df4882ca7ffb	no	3
Warnings:					
Information:					
3	Application Data Sheet	45335-0020002ads.pdf	1824276 abe648be2dc36834ca3b122d8a48e2e238e74386	no	11
Warnings:					
Information:					
4	Power of Attorney	45335-0020002poa.pdf	369636 d3ba00b1f588dc8f60b71d1772f61ccfa341435e	no	2
Warnings:					
Information:					
5		45335-0020002appln.pdf	1175903 93f46f373dd06c8ee777c1b11ea497bd7cc3dbe1	yes	31

Multipart Description/PDF files in .zip description

Document Description	Start	End
Specification	1	29
Claims	30	30
Abstract	31	31

Warnings:					
Information:					
6	Drawings-only black and white line drawings	45335-0020002figs.pdf	1153839 93baf8cddf7771ae438d495daacb6ead6edf509b	no	38
Warnings:					
Information:					
7	Oath or Declaration filed	45335-0020002declarations.pdf	7031190 b41989dd5359c221735a94a8b10903662f28f339	no	5
Warnings:					
Information:					
8	Fee Worksheet (SB06)	fee-info.pdf	38622 15a98c8367d5fe67e716b55ffe146463751d0a10	no	2
Warnings:					
Information:					
		Total Files Size (in bytes):	11858545		

This Acknowledgement Receipt evidences receipt on the noted date by the USPTO of the indicated documents, characterized by the applicant, and including page counts, where applicable. It serves as evidence of receipt similar to a Post Card, as described in MPEP 503.

New Applications Under 35 U.S.C. 111
If a new application is being filed and the application includes the necessary components for a filing date (see 37 CFR 1.53(b)-(d) and MPEP 506), a Filing Receipt (37 CFR 1.54) will be issued in due course and the date shown on this Acknowledgement Receipt will establish the filing date of the application.
National Stage of an International Application under 35 U.S.C. 371
If a timely submission to enter the national stage of an international application is compliant with the conditions of 35 U.S.C. 371 and other applicable requirements a Form PCT/DO/EO/903 indicating acceptance of the application as a national stage submission under 35 U.S.C. 371 will be issued in addition to the Filing Receipt, in due course.
New International Application Filed with the USPTO as a Receiving Office
If a new international application is being filed and the international application includes the necessary components for an international filing date (see PCT Article 11 and MPEP 1810), a Notification of the International Application Number and of the International Filing Date (Form PCT/RO/105) will be issued in due course, subject to prescriptions concerning national security, and the date shown on this Acknowledgement Receipt will establish the international filing date of the application.

Doc Code: TRACK1.REQ
Document Description: TrackOne Request

PTO/AIA/424 (03-14)

CERTIFICATION AND REQUEST FOR PRIORITIZED EXAMINATION UNDER 37 CFR 1.102(e) (Page 1 of 1)

First Named Inventor:	Ahmnon D. Moskowitz	Non provisional Application Number (if known):	
Title of Invention:	ZERO-PROFILE EXPANDABLE INTERVERTEBRAL SPACER DEVICES FOR DISTRACTION AND SPINAL FUSION AND A UNIVERSAL TOOL FOR THEIR PLACEMENT AND EXPANSION		

APPLICANT HEREBY CERTIFIES THE FOLLOWING AND REQUESTS PRIORITIZED EXAMINATION FOR THE ABOVE-IDENTIFIED APPLICATION.

1. The processing fee set forth in 37 CFR 1.17(i)(1), the prioritized examination fee set forth in 37 CFR 1.17(c), and if not already paid, the publication fee set forth in 37 CFR 1.18(d) have been filed with the request. The basic filing fee, search fee, and examination fee are filed with the request or have been already been paid. I understand that any required excess claims fees or application size fee must be paid for the application.

2. I understand that the application may not contain, or be amended to contain, more than four independent claims, more than thirty total claims, or any multiple dependent claims.

3. The applicable box is checked below:

I. ☒ Original Application (Track One) - Prioritized Examination under § 1.102(e)(1)

i. (a) The application is an original non provisional utility application filed under 35 U.S.C. 111(a). This certification and request is being filed with the utility application via EFS-Web.

---OR---

(b) The application is an original non provisional plant application filed under 35 U.S.C. 111(a). This certification and request is being filed with the plant application in paper.

ii. An executed inventor's oath or declaration under 37 CFR 1.63 or 37 CFR 1.64 for each inventor, **or** the application data sheet meeting the conditions specified in 37 CFR 1.53(f)(3)(i) is filed with the application.

II. ☐ Request for Continued Examination - Prioritized Examination under § 1.102(e)(2)

i. A request for continued examination has been filed with, or prior to, this form.
ii. If the application is a utility application, this certification and request is being filed via EFS-Web.
iii. The application is an original non provisional utility application filed under 35 U.S.C. 111(a), or is a national stage entry under 35 U.S.C. 371.
iv. This certification and request is being filed prior to the mailing of a first Office action responsive to the request for continued examination.
v. No prior request for continued examination has been granted prioritized examination status under 37 CFR 1.102(e)(2).

Signature /Stuart A. Nelson/	Date 11/21/2017
Name (Print/Typed) Stuart A. Nelson	Practitioner Registration Number 63,947

Note: *This form must be signed in accordance with 37 CFR 1.33. See 37 CFR 1.4(d) for signature requirements and certifications. Submit multiple forms if more than one signature is required.**

☐ *Total of _____ forms are submitted.

61596862.doc

Privacy Act Statement

The **Privacy Act of 1974 (P.L. 93-579)** requires that you be given certain information in connection with your submission of the attached form related to a patent application or patent. Accordingly, pursuant to the requirements of the Act, please be advised that: (1) the general authority for the collection of this information is 35 U.S.C. 2(b)(2); (2) furnishing of the information solicited is voluntary; and (3) the principal purpose for which the information is used by the U.S. Patent and Trademark Office is to process and/or examine your submission related to a patent application or patent. If you do not furnish the requested information, the U.S. Patent and Trademark Office may not be able to process and/or examine your submission, which may result in termination of proceedings or abandonment of the application or expiration of the patent.

The information provided by you in this form will be subject to the following routine uses:

1. The information on this form will be treated confidentially to the extent allowed under the Freedom of Information Act (5 U.S.C. 552) and the Privacy Act (5 U.S.C 552a). Records from this system of records may be disclosed to the Department of Justice to determine whether disclosure of these records is required by the Freedom of Information Act.
2. A record from this system of records may be disclosed, as a routine use, in the course of presenting evidence to a court, magistrate, or administrative tribunal, including disclosures to opposing counsel in the course of settlement negotiations.
3. A record in this system of records may be disclosed, as a routine use, to a Member of Congress submitting a request involving an individual, to whom the record pertains, when the individual has requested assistance from the Member with respect to the subject matter of the record.
4. A record in this system of records may be disclosed, as a routine use, to a contractor of the Agency having need for the information in order to perform a contract. Recipients of information shall be required to comply with the requirements of the Privacy Act of 1974, as amended, pursuant to 5 U.S.C. 552a(m).
5. A record related to an International Application filed under the Patent Cooperation Treaty in this system of records may be disclosed, as a routine use, to the International Bureau of the World Intellectual Property Organization, pursuant to the Patent Cooperation Treaty.
6. A record in this system of records may be disclosed, as a routine use, to another federal agency for purposes of National Security review (35 U.S.C. 181) and for review pursuant to the Atomic Energy Act (42 U.S.C. 218(c)).
7. A record from this system of records may be disclosed, as a routine use, to the Administrator, General Services, or his/her designee, during an inspection of records conducted by GSA as part of that agency's responsibility to recommend improvements in records management practices and programs, under authority of 44 U.S.C. 2904 and 2906. Such disclosure shall be made in accordance with the GSA regulations governing inspection of records for this purpose, and any other relevant *(i.e.,* GSA or Commerce) directive. Such disclosure shall not be used to make determinations about individuals.
8. A record from this system of records may be disclosed, as a routine use, to the public after either publication of the application pursuant to 35 U.S.C. 122(b) or issuance of a patent pursuant to 35 U.S.C. 151. Further, a record may be disclosed, subject to the limitations of 37 CFR 1.14, as a routine use, to the public if the record was filed in an application which became abandoned or in which the proceedings were terminated and which application is referenced by either a published application, an application open to public inspection or an issued patent.
9. A record from this system of records may be disclosed, as a routine use, to a Federal, State, or local law enforcement agency, if the USPTO becomes aware of a violation or potential violation of law or regulation.

IN THE UNITED STATES PATENT AND TRADEMARK OFFICE

First Named Inventor	:	Ahmnon D. Moskowitz	Art Unit	:	Unknown
Serial No.	:	15/820,232	Examiner	:	Unknown
Filed	:	November 21, 2017			
Title	:	ZERO-PROFILE EXPANDABLE INTERVERTEBRAL SPACER DEVICES FOR DISTRACTION AND SPINAL FUSION AND A UNIVERSAL TOOL FOR THEIR PLACEMENT AND EXPANSION			

Commissioner for Patents
P.O. Box 1450
Alexandria, VA 22313-1450

PRELIMINARY AMENDMENT

Prior to examination, please amend the application as indicated on the following pages.

Electronic Acknowledgement Receipt

EFS ID:	31062626
Application Number:	15820232
International Application Number:	
Confirmation Number:	1007
Title of Invention:	ZERO-PROFILE EXPANDABLE INTERVERTEBRAL SPACER DEVICES FOR DISTRACTION AND SPINAL FUSION AND A UNIVERSAL TOOL FOR THEIR PLACEMENT AND EXPANSION
First Named Inventor/Applicant Name:	Ahmnon D. Moskowitz
Customer Number:	26191
Filer:	Stuart A. Nelson/Abby Remer
Filer Authorized By:	Stuart A. Nelson
Attorney Docket Number:	45335-0020002
Receipt Date:	28-NOV-2017
Filing Date:	
Time Stamp:	15:11:42
Application Type:	Utility under 35 USC 111(a)

Payment information:

Submitted with Payment	no

File Listing:

Document Number	Document Description	File Name	File Size(Bytes)/ Message Digest	Multi Part /.zip	Pages (if appl.)
1		Prelim.pdf	89603 a46431a6416af02c60488e1d0a71d67e92dbac67	yes	12

	Multipart Description/PDF files in .zip description		
	Document Description	**Start**	**End**
	Applicant Arguments/Remarks Made in an Amendment	12	12
	Claims	4	11
	Specification	2	3
	Preliminary Amendment	1	1
Warnings:			
Information:			
	Total Files Size (in bytes):	89603	

This Acknowledgement Receipt evidences receipt on the noted date by the USPTO of the indicated documents, characterized by the applicant, and including page counts, where applicable. It serves as evidence of receipt similar to a Post Card, as described in MPEP 503.

<u>New Applications Under 35 U.S.C. 111</u>
If a new application is being filed and the application includes the necessary components for a filing date (see 37 CFR 1.53(b)-(d) and MPEP 506), a Filing Receipt (37 CFR 1.54) will be issued in due course and the date shown on this Acknowledgement Receipt will establish the filing date of the application.
<u>National Stage of an International Application under 35 U.S.C. 371</u>
If a timely submission to enter the national stage of an international application is compliant with the conditions of 35 U.S.C. 371 and other applicable requirements a Form PCT/DO/EO/903 indicating acceptance of the application as a national stage submission under 35 U.S.C. 371 will be issued in addition to the Filing Receipt, in due course.
<u>New International Application Filed with the USPTO as a Receiving Office</u>
If a new international application is being filed and the international application includes the necessary components for an international filing date (see PCT Article 11 and MPEP 1810), a Notification of the International Application Number and of the International Filing Date (Form PCT/RO/105) will be issued in due course, subject to prescriptions concerning national security, and the date shown on this Acknowledgement Receipt will establish the international filing date of the application.

REMARKS

Claim 1 is currently pending. With this Preliminary Amendment, claim 1 is cancelled and claims 2-21 are added. Support for these amendments can be found throughout the specification.

Applicant asks that all claims be examined in view of the amendment to the claims. No fees are believed to be due. Please apply any necessary charges or credits to Deposit Account 06-1050, referencing the above attorney docket number.

Respectfully submitted,

Date: 11/28/2017

/Stuart A. Nelson/

Stuart A. Nelson
Reg. No. 63,947

Customer Number 26191
Fish & Richardson P.C.
Telephone: (612) 337-2538
Facsimile: (877) 769-7945

61596896.doc

Amendments to the Claims:

This listing of claims replaces all prior versions and listings of claims in the application:

Listing of Claims:

1. (Cancelled)

2. (New) An expandable interbody device comprising:

a first housing extending from a first end to a second end, wherein the first housing has first and second end portions positioned at the first and second ends, respectively, and has first and second side portions extending between the first and second end portions, wherein the first housing has a first vertebral body engagement surface and has a first interior surface positioned on an opposite side of the first housing than the first vertebral body engagement surface;

a second housing extending from a third end to a fourth end, wherein the second housing has third and fourth end portions positioned at the third and fourth ends, respectively, and has third and fourth side portions extending between the third and fourth end portions, wherein the second housing has a second vertebral body engagement surface and has a second interior surface positioned on an opposite side of the second housing than the second vertebral body engagement surface, wherein the first housing is aligned with the second housing such that the first end of the first housing is axially aligned with the third end of the second housing and the second end of the first housing is axially aligned with the fourth end of the second housing, wherein the first end portion of the first housing is hingedly connected to the third end portion of the second housing such that the first housing can pivot with respect to the second housing so as to move the second end portion of the first housing away from the fourth end portion of the second housing, wherein the second housing defines a slot in the fourth end portion

between the third and fourth side portions that is sized to receive the second end portion of the first housing such that the second end of the first housing and the fourth end of the second housing are axially aligned;

a wedge extending from a fifth end to a sixth end and having an angled wedge surface extending along at least a portion of a distance between the fifth end and the sixth end, wherein the wedge is positioned between the first housing and the second housing with the angled wedge surface facing the first interior surface of the first housing, wherein the first interior surface of the first housing has an angled housing surface shaped to engage the angled wedge surface of the wedge, wherein a distance from the fifth end to the sixth end of the wedge is less than a distance from the first end to the second end of the first housing and is less than a distance from the third end to the fourth end of the second housing, wherein the wedge is configured to slide within a spaced defined by the first and second housings in a direction toward the second and fourth ends of the first and second housings from a first wedge position that allows the first and second housings to pivot to a housing position that is substantially closed to a second wedge position whereby the angled wedge surface presses against the first interior surface of the first housing to hingedly open the first housing with respect to the second housing whereby the wedge remains axially confined within the space defined by the first and second housings in the first and second wedge positions; and

a rotation screw operably connected to the wedge and to the second housing, wherein rotation of the rotation screw moves the wedge in an axially translating direction with respect to the first housing and the second housing within the space defined by the first and second housings from the first wedge position to the second wedge position.

3. (New) The device of claim 2, wherein the first housing defines a first bone material receiving area between the first and second end portions and the first and second side portions, and wherein the second housing defines a second bone material receiving area between the third and fourth end portions and the third and fourth side portions.

4. (New) The device of claim 2, and further comprising means for retaining the rotation screw.

5. (New) The device of claim 2, and further comprising means for mating with prongs of a tool.

6. (New) The device of claim 2, wherein the wedge comprises a threaded hole that engages with a threaded surface of the rotation screw.

7. (New) The device of claim 2, and further comprising first and second retaining rings connected to the rotation screw so as to retain the rotation screw in place when the rotation screw rotates.

8. (New) The device of claim 2, wherein the third and fourth side portions define first and second indentations configured to be grabbed by an insertion tool.

9. (New) A system comprising the device of claim 8, wherein the system further comprises:

means for gripping and inserting the device.

10. (New) The system of claim 9, and further comprising:

means for turning the rotation screw.

11. (New) The device of claim 2, and further comprising means for attaching the first housing to the second housing.

12. (New) The device of claim 2, wherein the first housing has a thickness that varies between the first end and the second end such that the first interior surface has at least one curved portion and at least one straight portion.

13. (New) The device of claim 2, wherein the wedge comprises substantially straight and parallel opposing side surfaces.

14. (New) A method of operating the device of claim 2, the method comprising:

inserting the device in a target surgical location between two vertebrae; and

turning the rotation screw to drive the wedge to pivot the first housing away from the second housing while the device is positioned between the vertebrae.

15. (New) An expandable interbody device comprising:

a first housing extending from a first end to a second end, wherein the first housing has first and second end portions positioned at the first and second ends, respectively, and has first and second side portions extending between the first and second end portions, wherein the first housing has a first vertebral body engagement surface that is substantially convex and has a first interior surface positioned on an opposite side of the first housing than the first vertebral body engagement surface, , wherein the first housing defines at least one first bone material receiving area between the first and second end portions and the first and second side portions;

a second housing extending from a third end to a fourth end, wherein the second housing has third and fourth end portions positioned at the third and fourth ends, respectively, and has third and fourth side portions extending between the third and fourth end portions, wherein the second housing has a second vertebral body engagement surface that is substantially convex and has a second interior surface positioned on an opposite side of the second housing than the second vertebral body engagement surface, wherein the second housing defines at least one second bone material receiving area between the third and fourth end portions and the third and fourth side portions, wherein the first housing is aligned with the second housing such that the first end of the first housing is axially aligned with the third end of the second housing and the second end of the first housing is axially aligned with the fourth end of the second housing, wherein the first end portion of the first housing and the third end portion of the second housing are hingedly interconnected such that the first housing can pivot with respect to the second housing so as to move the second end portion of the first housing away from the

fourth end portion of the second housing, wherein at least part of the first housing is positioned between the third and fourth side portions of the second housing;

a wedge extending from a fifth end to a sixth end and having an angled wedge surface extending along at least a portion of a distance between the fifth end and the sixth end, wherein the wedge is positioned between the first housing and the second housing with the angled wedge surface facing the first interior surface of the first housing, wherein the first interior surface of the first housing has an angled housing surface shaped to engage the angled wedge surface of the wedge, wherein a distance from the fifth end to the sixth end of the wedge is less than a distance from the first end to the second end of the first housing and is less than a distance from the third end to the fourth end of the second housing, wherein the wedge is configured to slide within a spaced defined by the first and second housings in a direction toward the second and fourth ends of the first and second housings from a first wedge position that allows the first and second housings to pivot to a housing position that is substantially closed to a second wedge position whereby the angled wedge surface presses against the first interior surface of the first housing to hingedly open the first housing with respect to the second housing whereby the wedge remains axially confined within the space defined by the first and second housings in the first and second wedge positions; and

a rotation screw operably connected to the wedge and to the second housing, wherein rotation of the rotation screw moves the wedge in an axially translating direction with respect to the first housing and the second housing within the space defined by the first and second housings from the first wedge position to the second wedge position.

16. (New) The device of claim 15, wherein the first end portion of the first housing and the third end portion of the second housing are hingedly interconnected via at least two pins.

17. (New) The device of claim 15, wherein the first housing has a thickness that varies between the first end and the second end such that the first interior surface has at least one curved portion and at least one straight portion.

18. (New) The device of claim 15, and further comprising means for attaching the first housing to the second housing.

19. (New) A method of operating the device of claim 15, the method comprising:

inserting the device in a target surgical location between two vertebrae; and

turning the rotation screw to drive the wedge to pivot the first housing away from the second housing while the device is positioned between the vertebrae.

20. (New) An expandable interbody device comprising:

a first housing extending from a first end to a second end, wherein the first housing has first and second end portions positioned at the first and second ends, respectively, and has first and second side portions extending between the first and second end portions, wherein the first housing has a first vertebral body engagement surface and has a first interior surface positioned on an opposite side of the first housing than the first vertebral body engagement surface, wherein the first housing defines a first bone material receiving area between the first and second end portions and the first and second side portions;

a second housing extending from a third end to a fourth end, wherein the second housing has third and fourth end portions positioned at the third and fourth ends, respectively, and has third and fourth side portions extending between the third and fourth end portions, wherein the second housing has a second vertebral body engagement surface and has a second interior surface positioned on an opposite side of the second housing than the second vertebral body engagement surface, wherein the second housing defines a second bone material receiving area between the third and fourth end portions and the third and fourth side portions, wherein the third and fourth side portions define first and second indentations

configured to be grabbed by an insertion tool, wherein the first housing is aligned with the second housing such that the first end of the first housing is axially aligned with the third end of the second housing and the second end of the first housing is axially aligned with the fourth end of the second housing, wherein the first end portion of the first housing is hingedly connected to the third end portion of the second housing such that the first housing can pivot with respect to the second housing so as to move the second end portion of the first housing away from the fourth end portion of the second housing, wherein the second housing defines a slot in the fourth end portion between the third and fourth side portions that is sized to receive the second end portion of the first housing such that the second end of the first housing and the fourth end of the second housing are axially aligned;

a wedge extending from a fifth end to a sixth end with an angled wedge surface extending along at least a portion of a distance between the fifth end and the sixth end and with first and second substantially straight and parallel opposing side surfaces, wherein the wedge is positioned between the first housing and the second housing with the angled wedge surface facing the first interior surface of the first housing, wherein the first interior surface of the first housing has an angled housing surface shaped to engage the angled wedge surface of the wedge, wherein a distance from the fifth end to the sixth end of the wedge is less than a distance from the first end to the second end of the first housing and is less than a distance from the third end to the fourth end of the second housing, wherein the wedge is configured to slide within a spaced defined by the first and second housings in a direction toward the second and fourth ends of the first and second housings from a first wedge position that allows the first and second housings to pivot to a housing position that is substantially closed to a second wedge position whereby the angled wedge surface presses against the first interior surface of the first housing to hingedly open the first housing with respect to the second housing whereby the wedge remains axially confined within the space defined by the first and second housings in the first and second wedge positions; and

a rotation screw operably connected to the wedge and to the second housing, wherein rotation of the rotation screw moves the wedge in an axially translating direction with respect to the first housing and the second housing within the space defined by the first and second housings from the first wedge position to the second wedge position.

21. (New) The device of claim 20, and further comprising means for attaching the first housing to the second housing.

Amendments to the Specification:

Please replace the paragraphs beginning after the title with the following amended paragraph:

[0001] This application is a Continuation Application of application Serial No. 14/063,197, filed on October 25, 2013, which is a Continuation-in-part Application of co-pending application Serial No. 13/210,150, filed August 15, 2011, which is a Continuation-in-part Application of co-pending application Serial No. 13/084,543, filed on April 11, 2011, now U.S. Patent No. 8,353,913 issued on January 15, 2013, which is a Divisional Application of application Serial No. 11/842,855, filed on August 21, 2007, now U.S. Patent No. 7,942,903 issued on May 17, 2011, and a Continuation Application of application Serial No. 13/108,982, filed on May 16, 2011, now U.S. Patent No. 9,005,293 issued on April 14, 2015, which also is a Continuation Application of application Serial No. 11/842,855, filed on August 21, 2007, now U.S. Patent No. 7,942,903 issued on May 17, 2011, which is a Continuation-In-Part Application of application Serial No. 11/536,815, filed on September, 29, 2006, now U.S. Patent No. 7,846,188 issued on December 7, 2010, which is a Continuation-In-Part Application of application Serial No. 11/208,644, filed on August 23, 2005, now U.S. Patent No. 7,704,279 issued on April 27, 2010, for which priority is claimed under 35 U.S.C. §120; and this application also claims priority under 35 U.S.C. § 119(e) of U.S. provisional application No. 60/670,231, filed on April 12, 2005; the entire contents of all the above identified patent applications are hereby incorporated by reference.

[0002] U.S. Patent Application Serial Nos. 13/084,543, filed on April 11, 2011 ~~(Attorney Docket No. 3003/0105PUS2)~~, 11/842,855, filed on August 21, 2007 ~~(Attorney Docket No. 3003/0105PUS1)~~, 11/536,815, filed on September 29, 2006 ~~(Attorney Docket No. 3003/0104PUS2)~~, and 11/208,644, filed on August 23, 2005 ~~(Attorney Docket No. 3003/0104PUS1)~~, each claim the benefit of priority under 35 U.S.C. § 119(e) of U.S. Provisional Application No. 60/670,231, filed on April 12, 2005 ~~(Attorney Docket No. 3003/0102PR01)~~, and this application hereby incorporates the claim of priority to this provisional application under 35 U.S.C. § 119(e) from the aforementioned intermediate applications (for which priority of each

intermediate application is claimed under 35 U.S.C. § 120); and the entire contents of all of the above identified patent applications are hereby incorporated by reference in their entirety.

IN THE UNITED STATES PATENT AND TRADEMARK OFFICE

First Named Inventor	:	Ahmnon D. Moskowitz	Art Unit	:	Unknown
Serial No.	:	15/820,232	Examiner	:	Unknown
Filed	:	November 21, 2017	Conf. No.	:	1007
Title	:	ZERO-PROFILE EXPANDABLE INTERVERTEBRAL SPACER DEVICES FOR DISTRACTION AND SPINAL FUSION AND A UNIVERSAL TOOL FOR THEIR PLACEMENT AND EXPANSION			

MAIL STOP AMENDMENT
Commissioner for Patents
P.O. Box 1450
Alexandria, VA 22313-1450

INFORMATION DISCLOSURE STATEMENT

Please consider the references listed on the enclosed PTO-1449 Form. Cited U.S. patents and patent application publications will be provided on request.

Under 35 USC §120, this application relies on the earlier filing date of application serial number 14/063,197, filed on October 25, 2013. The references corresponding to Desig. ID Nos. 250-308 have not been considered in the prior application. All other references listed on the PTO-1449 Form were submitted to and/or cited by the Office in the prior application, and so copies of those references are not provided in this application.

This statement is being filed within three months of the filing date of the application or before the receipt of a first action on the merits.

Apply any necessary charges or credits to deposit account 06-1050, referencing the above attorney docket number.

Please contact the undersigned if there are any questions regarding this statement.

Respectfully submitted,

Date: 11/30/2017

/Stuart A. Nelson/

Stuart A. Nelson
Reg. No. 63,947

Customer Number 26191
Fish & Richardson P.C.
Telephone: (612) 337-2538
Facsimile: (877) 769-7945

61598883.doc

Substitute Disclosure Form U.S. Department of Commerce Patent and Trademark Office	Attorney Docket No. 45335-0020002	Application No. 15/820,232
Information Disclosure Statement by Applicant (Use several sheets if necessary)	Applicant Dr. Nathan C. Moskowitz	
(37 CFR §1.98(b))	Filing Date November 21, 2017	Group Art Unit

U.S. Patent Documents

Examiner Initial	Desig. ID	Document Number	Publication Date	Patentee	Class	Subclass	Filing Date If Appropriate
	1.	2360942	1944-10-24	ELLERSTEIN			
	2.	4064881	1977-12-27	Meredith			
	3.	4554914	1985-11-26	Kapp et al.			
	4.	4599086	1986-07-08	DOTY			
	5.	4636217	1987-01-13	Ogilvie et al.			
	6.	4904261	1990-02-27	Dove et al.			
	7.	4960420	1990-10-02	Goble et al.			
	8.	4997432	1991-03-05	Keller			
	9.	5005749	1991-04-09	Aranyi			
	10.	5062850	1991-11-05	MACMILLAN et al.			
	11.	5123926	1992-06-23	Pisharodi			
	12.	5290312	1994-03-01	KOJIMOTO et al.			
	13.	5405391	1995-04-11	Henderson et al.			
	14.	5413583	1995-05-09	Wohlers			
	15.	5454819	1995-10-03	Knoepfler			
	16.	5514180	1996-05-07	Heggeness et al.			
	17.	5660188	1997-08-26	Groiso			
	18.	5667472	1997-09-07	Finn et al.			
	19.	5713912	1998-02-03	Porter			
	20.	5782832	1998-07-21	Larsen et al.			
	21.	5865848	1999-02-02	Baker			
	22.	5888223	1999-03-30	Bray, Jr.			
	23.	5916224	1999-06-29	Esplin			
	24.	5951574	1999-09-14	Stefanchik et al.			
	25.	5960522	1999-10-05	Boe			
	26.	5968054	1999-10-19	Yeatts et al.			

Examiner Signature	Date Considered

EXAMINER: Initials citation considered. Draw line through citation if not in conformance and not considered. Include copy of this form with next communication to applicant.

Substitute Disclosure Form

Substitute Disclosure Form U.S. Department of Commerce Patent and Trademark Office	Attorney Docket No. 45335-0020002	Application No. 15/820,232
Information Disclosure Statement by Applicant (Use several sheets if necessary)	Applicant Dr. Nathan C. Moskowitz	
(37 CFR §1.98(b))	Filing Date November 21, 2017	Group Art Unit

U.S. Patent Documents

Examiner Initial	Desig. ID	Document Number	Publication Date	Patentee	Class	Subclass	Filing Date If Appropriate
	27.	5976136	1999-11-02	Bailey et al.			
	28.	6126689	2000-10-03	Brett			
	29.	6224602	5/1/2001	Hayes			
	30.	6235034	5/22/2001	Bray			
	31.	6322562	11/27/2001	Wolter			
	32.	6342074	2002-01-29	Simpson			
	33.	6368350	2002-04-09	Erickson et al.			
	34.	6375682	2002-04-23	Fleischmann et al.			
	35.	20020068977	2002-06-06	JACKSON			
	36.	6419704	2002-07-16	Ferree			
	37.	6432106	2002-08-13	Fraser			
	38.	6454807	09-2002	Jackson			
	39.	6458159	2002-10-01	Thalgott			
	40.	20020143338	2002-10-03	ORBAYet al.			
	41.	6527804	2003-03-04	Gauchet et al.			
	42.	6533818	2003-03-18	Weber et al.			
	43.	6558423	2003-05-06	Michelson			
	44.	6572653	2003-06-03	Simonson			
	45.	6579318	2003-06-17	Varga et al.			
	46.	6582468	2003-06-24	Gauchet			
	47.	20030130737	2003-07-10	MCGAHAN et al.			
	48.	6613055	2003-09-02	Di Emidio			
	49.	6629998	2003-10-07	Lin			
	50.	6641614	2003-11-04	Wagner et al.			
	51.	6655243	2003-12-02	Anderson et al.			
	52.	6716247	4/6/2004	Michelson			

Examiner Signature	Date Considered
EXAMINER: Initials citation considered. Draw line through citation if not in conformance and not considered. Include copy of this form with next communication to applicant.	

Substitute Disclosure Form U.S. Department of Commerce Patent and Trademark Office	Attorney Docket No. 45335-0020002	Application No. 15/820,232
Information Disclosure Statement by Applicant (Use several sheets if necessary)	Applicant Dr. Nathan C. Moskowitz	
(37 CFR §1.98(b))	Filing Date November 21, 2017	Group Art Unit

U.S. Patent Documents

Examiner Initial	Desig. ID	Document Number	Publication Date	Patentee	Class	Subclass	Filing Date If Appropriate
	53.	6719794	2004-04-13	Gerber			
	54.	6723126	2004-04-20	Berry			
	55.	20040088054	2004-05-06	Berry			
	56.	6733532	2004-05-11	Gauchet et al.			
	57.	6764491	2004-07-20	Frey et al.			
	58.	6770094	2004-08-03	Fehling et al.			
	59.	20040177531	2004-09-16	DiBenedetto et al.			
	60.	20040186569	9/23/2004	Berry			
	61.	20040193272	2004-09-30	Zubok et al.			
	62.	20040220571	2004-11-04	Assaker et al.			
	63.	6824564	2004-11-30	Crozet			
	64.	20040254644	2004-12-16	Taylor			
	65.	20050027362	2005-02-03	Williams et al.			
	66.	6852117	2005-02-08	Orlowski			
	67.	20050049590	2005-03-03	Alleyne et al.			
	68.	6890355	5/10/2005	Michelson			
	69.	6904308	2005-06-07	Frisch et al.			
	70.	20050177235	2005-08-11	BAYNHAM et al.			
	71.	20050216084	2005-09-29	Fleischmann			
	72.	6953477	2005-10-11	BERRY			
	73.	6955671	2005-10-18	Uchikubo			
	74.	6962606	2005-11-08	MICHELSON			
	75.	20050256576	11/17/2005	Moskowitz et al.			
	76.	20050261769	11/24/2005	Moskowitz et al.			
	77.	6972019	2005-12-06	Michelson			
	78.	20050273170	2005-12-08	Navarro et al.			

Examiner Signature	Date Considered
EXAMINER: Initials citation considered. Draw line through citation if not in conformance and not considered. Include copy of this form with next communication to applicant.	

Substitute Disclosure Form

Substitute Disclosure Form U.S. Department of Commerce Patent and Trademark Office	Attorney Docket No. 45335-0020002	Application No. 15/820,232
Information Disclosure Statement by Applicant (Use several sheets if necessary)	Applicant Dr. Nathan C. Moskowitz	
(37 CFR §1.98(b))	Filing Date November 21, 2017	Group Art Unit

U.S. Patent Documents

Examiner Initial	Desig. ID	Document Number	Publication Date	Patentee	Class	Subclass	Filing Date If Appropriate
	79.	6974480	2005-12-13	Messerli et al.			
	80.	20050278026	2005-12-15	Gordon, et al.			
	81.	7030904	2006-04-18	Adair et al.			
	82.	7033394	2006-04-25	Michelson			
	83.	7037258	2006-05-02	Chatenever et al.			
	84.	20060155285	2006-07-13	Anderson			
	85.	7077864	2006-07-18	Byrd et al.			
	86.	7097615	2006-08-29	Banik et al.			
	87.	20060241621	10/26/2006	Moskowitz et al.			
	88.	7135043	2006-11-14	NAKAHARA et al.			
	89.	2007/0049943	3/1/2007	Moskowitz et al.			
	90.	7211112	2007-05-01	Baynham et al.			
	91.	7232464	2007-06-19	Mathieu et al.			
	92.	7238203	2007-07-03	Bagga et al.			
	93.	20070167678	7/19/2007	Moskowitz et al.			
	94.	20070198089	8/23/2007	Moskowitz et al.			
	95.	20070213820	2007-09-13	MAGERL et al			
	96.	20070250167	2007-10-25	BRAY et al.			
	97.	2007/0250172	10/25/2007	Moskowitz et al.			
	98.	20070276498	2007-11-29	AEBI et al.			
	99.	7326248	2008-02-05	Michelson			
	100.	2008/0033440	2/7/2008	Moskowitz et al.			
	101.	2008/0177307	7/24/2008	Moskowitz et al.			
	102.	20080183293	2008-07-31	Parry et al.			
	103.	20080249575	2008-10-09	Waugh et al.			
	104.	20080249569	2008-10-09	Waugh et al.			

Examiner Signature	Date Considered
EXAMINER: Initials citation considered. Draw line through citation if not in conformance and not considered. Include copy of this form with next communication to applicant.	

Substitute Disclosure Form

Substitute Disclosure Form U.S. Department of Commerce Patent and Trademark Office	Attorney Docket No. 45335-0020002	Application No. 15/820,232
Information Disclosure Statement by Applicant (Use several sheets if necessary)	Applicant Dr. Nathan C. Moskowitz	
(37 CFR §1.98(b))	Filing Date November 21, 2017	Group Art Unit

U.S. Patent Documents

Examiner Initial	Desig. ID	Document Number	Publication Date	Patentee	Class	Subclass	Filing Date If Appropriate
	105.	20080249625	2008-10-09	Waugh et al.			
	106.	7442299	2008-10-28	Lee et al.			
	107.	7442209	2008-10-28	Michelson			
	108.	20080281425	2008-11-13	THALGOTT et al.			
	109.	20080281424	11/13/2008	Parry et al.			
	110.	20090030520	2009-01-29	BIEDERMANN et al.			
	111.	20090080997	2009-03-26	JOHNSON			
	112.	20090105831	2009-04-23	Jones et al.			
	113.	20090105830	2009-04-23	Jones et al.			
	114.	20090105831	4/23/2009	Jones et al.			
	115.	20090112271	4/30/2009	Moskowitz et al.			
	116.	20090182430	2009-07-16	TYBER et al.			
	117.	20090187218	2009-07-23	Schaffhausen			
	118.	20090210062	2009-08-20	THALGOTT et al.			
	119.	2009/0224023	9/10/2009	Moskowitz et al.			
	120.	2009/0234455	9/17/2009	Moskowitz et al.			
	121.	7615059	2009-11-10	Watschke et al.			
	122.	7618456	2009-11-17	Mathieu et al.			
	123.	7628816	2009-12-08	Magerl et al.			
	124.	7704279	2010-04-27	MOSKOWITZ et al.			
	125.	7727246	2010-06-01	Sixto et al.			
	126.	20100145460	2010-06-10	McDonough et al.			
	127.	7776093	2010-08-17	Wolek et al.			
	128.	7776047	8/17/2010	Fanger et al.			
	129.	7799081	09-2010	McKinley			
	130.	7803162	2010-09-28	MARNAY et al.			

Examiner Signature	Date Considered
EXAMINER: Initials citation considered. Draw line through citation if not in conformance and not considered. Include copy of this form with next communication to applicant.	

Substitute Disclosure Form

Substitute Disclosure Form U.S. Department of Commerce Patent and Trademark Office	Attorney Docket No. 45335-0020002	Application No. 15/820,232
Information Disclosure Statement by Applicant (Use several sheets if necessary)	Applicant Dr. Nathan C. Moskowitz	
(37 CFR §1.98(b))	Filing Date November 21, 2017	Group Art Unit

U.S. Patent Documents

Examiner Initial	Desig. ID	Document Number	Publication Date	Patentee	Class	Subclass	Filing Date If Appropriate
	131.	7850733	12-2010	Baynham			
	132.	20100305704	2010-12-02	Messerli et al.			
	133.	7846207	2010-12-07	Lechmann et al.			
	134.	2010/0324606	12/23/2010	Moskowitz et al.			
	135.	7862616	2011-01-04	Lechmann et al.			
	136.	7887591	2011-02-15	Aebi et al.			
	137.	7942903	2011-05-17	MOSKOWITZ et al.			
	138.	2011/0125269	5/26/2011	Moskowitz et al.			
	139.	2011/0137349	6/9/2011	Moskowitz et al.			
	140.	7959675	2011-06-14	Gately			
	141.	7972363	2011-07-05	Moskowitz et al.			
	142.	2011/0178600	7/21/2011	Moskowitz et al.			
	143.	7985255	2011-07-26	BRAY et al.			
	144.	20110208312	8/25/2011	Moskowitz et al.			
	145.	8029512	2011-10-04	Paltzer			
	146.	8034060	2011-10-11	Keren et al.			
	147.	20110288646	11/24/2011	Moskowitz et al.			
	148.	2011/0295327	12/1/2011	Moskowitz et al.			
	149.	2011/0295371	12/1/2011	Moskowitz et al.			
	150.	2011/0307011	12/15/2011	Moskowitz et al.			
	151.	2011/0319935	12/29/2011	Moskowitz et al.			
	152.	2012/0010714	1/12/2012	Moskowitz et al.			
	153.	8105367	2012-01-31	AUSTIN et al.			
	154.	8114162	2012-02-14	BRADLEY			
	155.	8137405	2012-03-20	KOSTUIK et al.			
	156.	8167949	2012-05-01	TYBER et al.			

Examiner Signature	Date Considered
EXAMINER: Initials citation considered. Draw line through citation if not in conformance and not considered. Include copy of this form with next communication to applicant.	

Substitute Disclosure Form U.S. Department of Commerce Patent and Trademark Office	Attorney Docket No. 45335-0020002	Application No. 15/820,232
Information Disclosure Statement by Applicant (Use several sheets if necessary)	Applicant Dr. Nathan C. Moskowitz	
(37 CFR §1.98(b))	Filing Date November 21, 2017	Group Art Unit

U.S. Patent Documents

Examiner Initial	Desig. ID	Document Number	Publication Date	Patentee	Class	Subclass	Filing Date If Appropriate
	157.	8268000	2012-09-18	WAUGH et al.			
	158.	8273127	2012-09-25	Jones et al.			
	159.	20120271423	2012-10-25	Wallenstein et al.			
	160.	20120277870	2012-11-01	Wolters et al.			
	161.	8328872	2012-12-11	Duffield et al.			
	162.	20120323330	2012-12-20	Kueenzi et al.			
	163.	2012/0330419	12/27/2012	Moskowitz et al.			
	164.	8353913	2013-01-15	Moskowitz et al.			
	165.	2013/0018468	1/17/2013	Moskowitz et al.			
	166.	2013/0018469	1/17/2013	Moskowitz et al.			
	167.	2013/0018470	1/17/2013	Moskowitz et al.			
	168.	2013/0023991	1/24/2013	Moskowitz et al.			
	169.	2013/0023992	1/24/2013	Moskowitz et al.			
	170.	2013/0053962	2/28/2013	Moskowitz et al.			
	171.	20130060339	2013-03-07	Duffield et al.			
	172.	20130073044	2013-03-21	Gamache			
	173.	8403986	2013-03-26	Michelson			
	174.	8414651	2013-04-09	TYBER et al.			
	175.	8419797	2013-04-16	Biedermann et al.			
	176.	8425607	2013-04-23	Waugh et al.			
	177.	20130173002	7/4/2013	Moskowitz et al.			
	178.	8535380	09-2013	Greenhalgh			
	179.	8540774	2013-09-24	KUEENZI et al.			
	180.	2013/0282017	10/24/2013	Moskowitz et al.			
	181.	8613761	2013-12-24	Lindemann et al.			
	182.	8728165	2014-05-20	PARRY et al.			

Examiner Signature	Date Considered
EXAMINER: Initials citation considered. Draw line through citation if not in conformance and not considered. Include copy of this form with next communication to applicant.	

Substitute Disclosure Form U.S. Department of Commerce Patent and Trademark Office	Attorney Docket No. 45335-0020002	Application No. 15/820,232
Information Disclosure Statement by Applicant (Use several sheets if necessary)	Applicant Dr. Nathan C. Moskowitz	
(37 CFR §1.98(b))	Filing Date November 21, 2017	Group Art Unit

U.S. Patent Documents

Examiner Initial	Desig. ID	Document Number	Publication Date	Patentee	Class	Subclass	Filing Date If Appropriate
	183.	8790405	2014-07-29	BIEDERMANN			
	184.	2014/0249629	9/4/2014	Moskowitz et al.			
	185.	2015/0025637	1/22/2015	Moskowitz et al.			
	186.	2015/0105824	4/16/2015	Moskowitz et al.			
	187.	2015/0148847	5/28/2015	Moskowitz et al.			
	188.	2016/0374830	12/29/2016	Moskowitz et al.			
	189.	2017/0252178	9/7/2017	Moskowitz et al.			
	190.	8062375	11/22/2011	Glerum et a].			
	191.	8267939	9/18/2012	Cipoletti et al.			
	192.	8603170	12/10/2013	Cipoletti et al.			
	193.	8721723	5/13/2014	Hansell et al.			
	194.	20140249628	9/4/2014	Weiman			
	195.	D626233	10/26/2010	Cipoletti et a1.			
	196.	20100168862	7/1/2010	Edie et al.			
	197.	20100318189	12/16/2010	Edie et al.			
	198.	20120271419	10/25/2012	Marik			
	199.	20120277865	11/1/2012	Trieu et al.			
	200.	20130158663	6/20/2013	Miller et al.			
	201.	20140088714	3/27/2014	Miller et al.			
	202.	20130158664	6/20/2013	Palmatier et al.			
	203.	8398713	3/19/2013	Weiman			
	204.	8435298	5/7/2013	Weiman			
	205.	8491659	7/23/2013	Weiman			
	206.	8632595	1/21/2014	Weiman			
	207.	8845731	9/30/2014	Weiman			
	208.	8845732	9/30/2014	Weiman			

Examiner Signature	Date Considered
EXAMINER: Initials citation considered. Draw line through citation if not in conformance and not considered. Include copy of this form with next communication to applicant.	

Substitute Disclosure Form U.S. Department of Commerce Patent and Trademark Office	Attorney Docket No. 45335-0020002	Application No. 15/820,232
Information Disclosure Statement by Applicant (Use several sheets if necessary)	Applicant Dr. Nathan C. Moskowitz	
(37 CFR §1.98(b))	Filing Date November 21, 2017	Group Art Unit

U.S. Patent Documents

Examiner Initial	Desig. ID	Document Number	Publication Date	Patentee	Class	Subclass	Filing Date If Appropriate
	209.	8845734	9/30/2014	Weimann			
	210.	8518120	8/27/2013	Glerum et al.			
	211.	8556979	10/15/2013	Glerum et al.			
	212.	8679183	3/25/2014	Glerum et al.			
	213.	8685098	4/1/2014	Glerum et al.			
	214.	8709086	4/29/2014	Glerum			
	215.	8888853	11/18/2014	Glerum et al.			
	216.	8888854	11/18/2014	Glerum et al.			
	217.	8926704	1/6/2015	Glerum et al.			
	218.	9034045	5/19/2015	Davenport et al.			
	219.	9198772	12/1/2015	Weimann			
	220.	5653763	8/5/1997	Errico et al.			
	221.	5658336	8/19/1997	Pisharodi			
	222.	5665122	9/9/1997	Kambin			
	223.	5980522	11/9/1999	Koros et al.			
	224.	6102950	8/15/2000	Vaccaro			
	225.	6190414	2/20/2001	Young et al.			
	226.	6193757	2/27/2001	Foley et al.			
	227.	6299642	10/9/2001	Chan			
	228.	6368351	4/9/2002	Glenn et al.			
	229.	6419705	4/9/2002	Glenn et al.			
	230.	6491724	12/10/2002	Ferree			
	231.	6835206	12/28/2004	Jackson			
	232.	6955691	10/18/2005	Ayyanathan et al.			
	233.	7070598	7/4/2006	Lim et al.			
	234.	7087055	8/8/2006	Lim et al.			

Examiner Signature	Date Considered
EXAMINER: Initials citation considered. Draw line through citation if not in conformance and not considered. Include copy of this form with next communication to applicant.	

Substitute Disclosure Form U.S. Department of Commerce Patent and Trademark Office	Attorney Docket No. 45335-0020002	Application No. 15/820,232
Information Disclosure Statement by Applicant (Use several sheets if necessary)	Applicant Dr. Nathan C. Moskowitz	
(37 CFR §1.98(b))	Filing Date November 21, 2017	Group Art Unit

U.S. Patent Documents

Examiner Initial	Desig. ID	Document Number	Publication Date	Patentee	Class	Subclass	Filing Date If Appropriate
	235.	7118579	10/10/2006	Michelson			
	236.	7214243	5/8/2007	Taylor et al.			
	237.	7320555	1/22/2008	Chang et al.			
	238.	7410501	8/12/2008	Michelson			
	239.	7445636	11/4/2008	Michelson			
	240.	7655027	2/2/2010	Michelson			
	241.	7655046	2/2/2010	Dryer et al.			
	242.	7722674	5/25/2010	Grotz et al.			
	243.	7753958	7/13/2010	Gordon et al.			
	244.	7763078	7/27/2010	Peterman et al.			
	245.	7828849	11/9/2010	Lim			
	246.	7846185	12/7/2010	Carls et al.			
	247.	7850733	12/14/2010	Baynham et al.			
	248.	7875078	1/25/2011	Wysocki et al.			
	249.	7909869	3/22/2011	Gordon et al.			
	250.	8062375	11/22/2011	Glerum et al.			
	251.	8105358	1/31/2012	Phan			
	252.	8105382	1/31/2012	Olmos et al.			
	253.	8123810	2/28/2012	Gordon et al.			
	254.	8133232	3/13/2012	Levy et al.			
	255.	8187332	5/29/2012	McLuen			
	256.	8382842	2/26/2013	Greenhalgh et al.			
	257.	8394145	3/12/2013	Weiman			
	258.	8403990	3/26/2013	Dryer et al.			
	259.	8496706	7/30/2013	Ragab et al.			
	260.	8523944	9/3/2013	Jimenez et al.			

Examiner Signature	Date Considered
EXAMINER: Initials citation considered. Draw line through citation if not in conformance and not considered. Include copy of this form with next communication to applicant.	

Substitute Disclosure Form

Substitute Disclosure Form U.S. Department of Commerce Patent and Trademark Office	Attorney Docket No. 45335-0020002	Application No. 15/820,232
Information Disclosure Statement by Applicant (Use several sheets if necessary)	Applicant Dr. Nathan C. Moskowitz	
(37 CFR §1.98(b))	Filing Date November 21, 2017	Group Art Unit

U.S. Patent Documents

Examiner Initial	Desig. ID	Document Number	Publication Date	Patentee	Class	Subclass	Filing Date If Appropriate
	261.	8568481	10/29/2013	Olmos et al.			
	262.	8628577	1/14/2014	Jimenez			
	263.	8628578	1/14/2014	Miller et al.			
	264.	8663329	3/4/2014	Ernst			
	265.	8685095	4/1/2014	Miller et al.			
	266.	8778025	7/15/2014	Ragab et al.			
	267.	8795366	8/5/2014	Varela			
	268.	8894711	11/25/2014	Varela			
	269.	8894712	11/25/2014	Varela			
	270.	8940049	1/27/2015	Jimenez et al.			
	271.	9039771	5/26/2015	Glerum et al.			
	272.	9119730	9/1/2015	Glerum et al.			
	273.	20020068976	6/6/2002	Jackson			
	274.	20040010315	1/15/2004	Song			
	275.	20040087947	5/6/2004	Lim et al.			
	276.	20040249466	12/9/2004	Liu et al.			
	277.	20050113916	5/26/2005	Branch			
	278.	20050113917	5/26/2005	Chae et al.			
	279.	20060241643	10/26/2006	Lim et al.			
	280.	20060241770	10/26/2006	Rhoda et al.			
	281.	20060247778	11/2/2006	Ferree et al.			
	282.	20070270968	11/22/2007	Baynham et al.			
	283.	20080058938	3/6/2008	Mujwid			
	284.	20090112319	4/30/2009	O'Neil et al.			
	285.	20090171461	7/2/2009	Conner et al.			
	286.	20090292361	11/26/2009	Lopez et al.			

Examiner Signature	Date Considered
EXAMINER: Initials citation considered. Draw line through citation if not in conformance and not considered. Include copy of this form with next communication to applicant.	

Substitute Disclosure Form

Substitute Disclosure Form U.S. Department of Commerce Patent and Trademark Office	Attorney Docket No. 45335-0020002	Application No. 15/820,232
Information Disclosure Statement by Applicant (Use several sheets if necessary)	Applicant Dr. Nathan C. Moskowitz	
(37 CFR §1.98(b))	Filing Date November 21, 2017	Group Art Unit

U.S. Patent Documents

Examiner Initial	Desig. ID	Document Number	Publication Date	Patentee	Class	Subclass	Filing Date If Appropriate
	287.	20090299478	12/3/2009	Carls et al.			
	288.	20100057208	3/4/2010	Dryer et al.			
	289.	20100204795	8/12/2010	Greenhalgh			
	290.	20100286780	11/11/2010	Dryer et al.			
	291.	20100286783	12/24/2010	Ueda			
	292.	20100292796	11/18/2010	Greenhalgh et al.			
	293.	20110015742	1/20/2011	Hong			
	294.	20110029082	2/3/2011	Hall			
	295.	20110054621	3/3/2011	Lim			
	296.	20110093074	4/21/2011	Glerum et al.			
	297.	20110172721	7/14/2011	Frigg et al.			
	298.	20110172774	7/14/2011	Varela			
	299.	20120035729	2/9/2012	Glerum et al.			
	300.	20120109319	5/3/2012	Perisic			
	301.	20120150304	6/14/2012	Glerum et al.			
	302.	20120150305	6/14/2012	Glerum et al.			
	303.	20120158146	6/21/2012	Glerum et al.			
	304.	20120158147	6/21/2012	Glerum et al.			
	305.	20120158148	6/21/2012	Glerum et al.			
	306.	20130144388	6/6/2013	Emery et al.			
	307.	20140121774	5/1/2014	Glerum et al.			
	308.	20140324171	10/30/2014	Glerum et al.			

Foreign Patent Documents or Published Foreign Patent Applications

Examiner Initial	Desig. ID	Document Number	Publication Date	Country or Patent Office	Class	Subclass	Translation Yes	Translation No

Examiner Signature	Date Considered

EXAMINER: Initials citation considered. Draw line through citation if not in conformance and not considered. Include copy of this form with next communication to applicant.

Substitute Disclosure Form

Substitute Disclosure Form U.S. Department of Commerce Patent and Trademark Office	Attorney Docket No. 45335-0020002	Application No. 15/820,232
Information Disclosure Statement by Applicant (Use several sheets if necessary)	Applicant Dr. Nathan C. Moskowitz	
(37 CFR §1.98(b))	Filing Date November 21, 2017	Group Art Unit

Foreign Patent Documents or Published Foreign Patent Applications

Examiner Initial	Desig. ID	Document Number	Publication Date	Country or Patent Office	Class	Subclass	Translation Yes	Translation No
	309.	2004093749	2004-11-04	WO			English Equiv. US 2007021 3820	
	310.	2006091503	2006-08-31	WO				
	311.	2727003	1996-05-24	FR				

Other Documents (include Author, Title, Date, and Place of Publication)

Examiner Initial	Desig. ID	Document
	312.	Vincent C. TRAYNELIS, "Prosthetics and Biologics: The Wave of the Future," CLINICAL NEUROSURGERY, Volume 50, Proceedings of the Congress of Neurological Surgeons, Philadelphia, PA 2002, Chapter 9, pages 207-219
	313.	E.K. WAI et al., "Disk Replacement Arthroplasties: Can The Success of Hip and Knee Replacements be Repeated in the Spine?," Seminars in Spine Surgery, Vol. 15, No. 4 (December) 2003, pp 473-482
	314.	Richard D. GUYER et al., "Intervertebral Disc Prostheses," SPINE JOURNAL, Volume 28, Number 15S, Supp. To 8/1/03, pages S15-S23
	315.	DIETER GROB et al.. "Clinical Experience With the Dynesys Semirigid Fixation System for the Lumbar Spine," SPINE, Vol. 30, No. 3, 2005, pp. 324-331
	316.	International Search Report (ISR) and Written Opinion of the International Searching Authority, 03 December 2007, International Application No. PCT/US 07/05005
	317.	International Search Report (ISR) and Written Opinion of the International Searching Authority, 21 May 2008, International Application No. PCT/US2007/021015
	318.	International Search Report (ISR) and Written Opinion of the International Searching Authority, 09 July 2008, International Application No. PCT/US2007021013

Examiner Signature	Date Considered
EXAMINER: Initials citation considered. Draw line through citation if not in conformance and not considered. Include copy of this form with next communication to applicant.	

Substitute Disclosure Form

Electronic Acknowledgement Receipt

EFS ID:	31095289
Application Number:	15820232
International Application Number:	
Confirmation Number:	1007
Title of Invention:	ZERO-PROFILE EXPANDABLE INTERVERTEBRAL SPACER DEVICES FOR DISTRACTION AND SPINAL FUSION AND A UNIVERSAL TOOL FOR THEIR PLACEMENT AND EXPANSION
First Named Inventor/Applicant Name:	Ahmnon D. Moskowitz
Customer Number:	26191
Filer:	Stuart A. Nelson/Melissa Andersen
Filer Authorized By:	Stuart A. Nelson
Attorney Docket Number:	45335-0020002
Receipt Date:	30-NOV-2017
Filing Date:	
Time Stamp:	17:23:46
Application Type:	Utility under 35 USC 111(a)

Payment information:

Submitted with Payment	no

File Listing:

Document Number	Document Description	File Name	File Size(Bytes)/ Message Digest	Multi Part /.zip	Pages (if appl.)
1	Information Disclosure Statement (IDS) Form (SB08)	Transmittal.pdf	71017 539a89be3f3285377fce80bfd0da3a18b4accefe	no	2

Warnings:

Information:					
This is not an USPTO supplied IDS fillable form					
2	Information Disclosure Statement (IDS) Form (SB08)	PTO-1449.pdf	191554 3a8db442cd5faf62d8ed7979d999ff9525abfb2a	no	13
Warnings:					
Information:					
This is not an USPTO supplied IDS fillable form					
			Total Files Size (in bytes):	262571	

This Acknowledgement Receipt evidences receipt on the noted date by the USPTO of the indicated documents, characterized by the applicant, and including page counts, where applicable. It serves as evidence of receipt similar to a Post Card, as described in MPEP 503.

New Applications Under 35 U.S.C. 111
If a new application is being filed and the application includes the necessary components for a filing date (see 37 CFR 1.53(b)-(d) and MPEP 506), a Filing Receipt (37 CFR 1.54) will be issued in due course and the date shown on this Acknowledgement Receipt will establish the filing date of the application.
National Stage of an International Application under 35 U.S.C. 371
If a timely submission to enter the national stage of an international application is compliant with the conditions of 35 U.S.C. 371 and other applicable requirements a Form PCT/DO/EO/903 indicating acceptance of the application as a national stage submission under 35 U.S.C. 371 will be issued in addition to the Filing Receipt, in due course.
New International Application Filed with the USPTO as a Receiving Office
If a new international application is being filed and the international application includes the necessary components for an international filing date (see PCT Article 11 and MPEP 1810), a Notification of the International Application Number and of the International Filing Date (Form PCT/RO/105) will be issued in due course, subject to prescriptions concerning national security, and the date shown on this Acknowledgement Receipt will establish the international filing date of the application.

PATENT APPLICATION FEE DETERMINATION RECORD

Substitute for Form PTO-875

Application or Docket Number
15/820,232

APPLICATION AS FILED - PART I

FOR	(Column 1) NUMBER FILED	(Column 2) NUMBER EXTRA	SMALL ENTITY RATE($)	SMALL ENTITY FEE($)	OR	OTHER THAN SMALL ENTITY RATE($)	OTHER THAN SMALL ENTITY FEE($)
BASIC FEE (37 CFR 1.16(a), (b), or (c))	N/A	N/A	N/A	70		N/A	
SEARCH FEE (37 CFR 1.16(k), (i), or (m))	N/A	N/A	N/A	300		N/A	
EXAMINATION FEE (37 CFR 1.16(o), (p), or (q))	N/A	N/A	N/A	360		N/A	
TOTAL CLAIMS (37 CFR 1.16(i))	20 minus 20 =	*	x 40 =	0.00	OR		
INDEPENDENT CLAIMS (37 CFR 1.16(h))	3 minus 3 =	*	x 210 =	0.00			
APPLICATION SIZE FEE (37 CFR 1.16(s))	If the specification and drawings exceed 100 sheets of paper, the application size fee due is $310 ($155 for small entity) for each additional 50 sheets or fraction thereof. See 35 U.S.C. 41(a)(1)(G) and 37 CFR 1.16(s).			0.00			
MULTIPLE DEPENDENT CLAIM PRESENT (37 CFR 1.16(j))				0.00			
* If the difference in column 1 is less than zero, enter "0" in column 2.			TOTAL	730		TOTAL	

APPLICATION AS AMENDED - PART II

		(Column 1) CLAIMS REMAINING AFTER AMENDMENT		(Column 2) HIGHEST NUMBER PREVIOUSLY PAID FOR	(Column 3) PRESENT EXTRA	SMALL ENTITY RATE($)	SMALL ENTITY ADDITIONAL FEE($)	OR	OTHER THAN SMALL ENTITY RATE($)	OTHER THAN SMALL ENTITY ADDITIONAL FEE($)
AMENDMENT A	Total (37 CFR 1.16(i))	*	Minus	**	=	x =		OR	x =	
AMENDMENT A	Independent (37 CFR 1.16(h))	*	Minus	***	=	x =		OR	x =	
AMENDMENT A	Application Size Fee (37 CFR 1.16(s))									
AMENDMENT A	FIRST PRESENTATION OF MULTIPLE DEPENDENT CLAIM (37 CFR 1.16(j))							OR		
						TOTAL ADD'L FEE		OR	TOTAL ADD'L FEE	

		(Column 1) CLAIMS REMAINING AFTER AMENDMENT		(Column 2) HIGHEST NUMBER PREVIOUSLY PAID FOR	(Column 3) PRESENT EXTRA	RATE($)	ADDITIONAL FEE($)		RATE($)	ADDITIONAL FEE($)
AMENDMENT B	Total (37 CFR 1.16(i))	*	Minus	**	=	x =		OR	x =	
AMENDMENT B	Independent (37 CFR 1.16(h))	*	Minus	***	=	x =		OR	x =	
AMENDMENT B	Application Size Fee (37 CFR 1.16(s))									
AMENDMENT B	FIRST PRESENTATION OF MULTIPLE DEPENDENT CLAIM (37 CFR 1.16(j))							OR		
						TOTAL ADD'L FEE		OR	TOTAL ADD'L FEE	

* If the entry in column 1 is less than the entry in column 2, write "0" in column 3.
** If the "Highest Number Previously Paid For" IN THIS SPACE is less than 20, enter "20".
*** If the "Highest Number Previously Paid For" IN THIS SPACE is less than 3, enter "3".
The "Highest Number Previously Paid For" (Total or Independent) is the highest found in the appropriate box in column 1.

UNITED STATES PATENT AND TRADEMARK OFFICE

UNITED STATES DEPARTMENT OF COMMERCE
United States Patent and Trademark Office
Address: COMMISSIONER FOR PATENTS
P.O. Box 1450
Alexandria, Virginia 22313-1450
www.uspto.gov

APPLICATION NUMBER	FILING or 371(c) DATE	GRP ART UNIT	FIL FEE REC'D	ATTY.DOCKET.NO	TOT CLAIMS	IND CLAIMS
15/820,232	11/21/2017		730	45335-0020002	20	3

CONFIRMATION NO. 1007

26191
FISH & RICHARDSON P.C. (TC)
PO BOX 1022
MINNEAPOLIS, MN 55440-1022

FILING RECEIPT

OC000000098005308

Date Mailed: 12/13/2017

Receipt is acknowledged of this non-provisional patent application. The application will be taken up for examination in due course. Applicant will be notified as to the results of the examination. Any correspondence concerning the application must include the following identification information: the U.S. APPLICATION NUMBER, FILING DATE, NAME OF APPLICANT, and TITLE OF INVENTION. Fees transmitted by check or draft are subject to collection. Please verify the accuracy of the data presented on this receipt. **If an error is noted on this Filing Receipt, please submit a written request for a Filing Receipt Correction. Please provide a copy of this Filing Receipt with the changes noted thereon. If you received a "Notice to File Missing Parts" for this application, please submit any corrections to this Filing Receipt with your reply to the Notice. When the USPTO processes the reply to the Notice, the USPTO will generate another Filing Receipt incorporating the requested corrections**

Inventor(s)

Ahmnon D. Moskowitz, Rockville, MD;
Mosheh T. Moskowitz, Rockville, MD;
Pablo A. Valdivia Y. Alvarado, Cambridge, MA;
Eric Sugalski, Arlington, MA;
Nathan C. Moskowitz, Rockville, MD;

Applicant(s)

Nathan C. Moskowitz, Rockville, MD;

Power of Attorney: The patent practitioners associated with Customer Number 26191

Domestic Priority data as claimed by applicant

This application is a CON of 14/063,197 10/25/2013 PAT 9848993
which is a CIP of 13/210,150 08/15/2011
and is a CIP of 13/210,157 08/15/2011
and is a CIP of 13/210,162 08/15/2011
and is a CIP of 13/210,168 08/15/2011
and is a CIP of 13/741,361 01/14/2013 PAT 9301854
and said 13/210,150 08/15/2011
is a CON of 13/084,543 04/11/2011 PAT 8353913
which is a DIV of 11/842,855 08/21/2007 PAT 7942903
which is a CIP of 11/536,815 09/29/2006 PAT 7846188
which is a CIP of 11/208,644 08/23/2005 PAT 7704279
which claims benefit of 60/670,231 04/12/2005
and said 13/210,157 08/15/2011
is a CON of 13/084,543 04/11/2011 PAT 8353913
and said 13/210,162 08/15/2011

is a CON of 13/084,543 04/11/2011 PAT 8353913
and said 13/210,168 08/15/2011
is a CON of 13/084,543 04/11/2011 PAT 8353913
and said 13/741,361 01/14/2013
is a CON of 13/084,543 04/11/2011 PAT 8353913
and said 14/063,197 10/25/2013
claims benefit of 61/801,783 03/15/2013
and claims benefit of 61/718,707 10/25/2012

Foreign Applications for which priority is claimed (You may be eligible to benefit from the **Patent Prosecution Highway** program at the USPTO. Please see http://www.uspto.gov for more information.) - None.
Foreign application information must be provided in an Application Data Sheet in order to constitute a claim to foreign priority. See 37 CFR 1.55 and 1.76.

Permission to Access Application via Priority Document Exchange: Yes

Permission to Access Search Results: Yes

Applicant may provide or rescind an authorization for access using Form PTO/SB/39 or Form PTO/SB/69 as appropriate.

If Required, Foreign Filing License Granted: 12/11/2017
The country code and number of your priority application, to be used for filing abroad under the Paris Convention, is **US 15/820,232**
Projected Publication Date: 03/22/2018
Non-Publication Request: No
Early Publication Request: No
** **SMALL ENTITY** **
Title

ZERO-PROFILE EXPANDABLE INTERVERTEBRAL SPACER DEVICES FOR DISTRACTION AND SPINAL FUSION AND A UNIVERSAL TOOL FOR THEIR PLACEMENT AND EXPANSION

Preliminary Class

Statement under 37 CFR 1.55 or 1.78 for AIA (First Inventor to File) Transition Applications: No

PROTECTING YOUR INVENTION OUTSIDE THE UNITED STATES

Since the rights granted by a U.S. patent extend only throughout the territory of the United States and have no effect in a foreign country, an inventor who wishes patent protection in another country must apply for a patent in a specific country or in regional patent offices. Applicants may wish to consider the filing of an international application under the Patent Cooperation Treaty (PCT). An international (PCT) application generally has the same effect as a regular national patent application in each PCT-member country. The PCT process **simplifies** the filing of patent applications on the same invention in member countries, but **does not result** in a grant of "an international patent" and does not eliminate the need of applicants to file additional documents and fees in countries where patent protection is desired.

Almost every country has its own patent law, and a person desiring a patent in a particular country must make an application for patent in that country in accordance with its particular laws. Since the laws of many countries differ

in various respects from the patent law of the United States, applicants are advised to seek guidance from specific foreign countries to ensure that patent rights are not lost prematurely.

Applicants also are advised that in the case of inventions made in the United States, the Director of the USPTO must issue a license before applicants can apply for a patent in a foreign country. The filing of a U.S. patent application serves as a request for a foreign filing license. The application's filing receipt contains further information and guidance as to the status of applicant's license for foreign filing.

Applicants may wish to consult the USPTO booklet, "General Information Concerning Patents" (specifically, the section entitled "Treaties and Foreign Patents") for more information on timeframes and deadlines for filing foreign patent applications. The guide is available either by contacting the USPTO Contact Center at 800-786-9199, or it can be viewed on the USPTO website at http://www.uspto.gov/web/offices/pac/doc/general/index.html.

For information on preventing theft of your intellectual property (patents, trademarks and copyrights), you may wish to consult the U.S. Government website, http://www.stopfakes.gov. Part of a Department of Commerce initiative, this website includes self-help "toolkits" giving innovators guidance on how to protect intellectual property in specific countries such as China, Korea and Mexico. For questions regarding patent enforcement issues, applicants may call the U.S. Government hotline at 1-866-999-HALT (1-866-999-4258).

LICENSE FOR FOREIGN FILING UNDER

Title 35, United States Code, Section 184

Title 37, Code of Federal Regulations, 5.11 & 5.15

GRANTED

The applicant has been granted a license under 35 U.S.C. 184, if the phrase "IF REQUIRED, FOREIGN FILING LICENSE GRANTED" followed by a date appears on this form. Such licenses are issued in all applications where the conditions for issuance of a license have been met, regardless of whether or not a license may be required as set forth in 37 CFR 5.15. The scope and limitations of this license are set forth in 37 CFR 5.15(a) unless an earlier license has been issued under 37 CFR 5.15(b). The license is subject to revocation upon written notification. The date indicated is the effective date of the license, unless an earlier license of similar scope has been granted under 37 CFR 5.13 or 5.14.

This license is to be retained by the licensee and may be used at any time on or after the effective date thereof unless it is revoked. This license is automatically transferred to any related applications(s) filed under 37 CFR 1.53(d). This license is not retroactive.

The grant of a license does not in any way lessen the responsibility of a licensee for the security of the subject matter as imposed by any Government contract or the provisions of existing laws relating to espionage and the national security or the export of technical data. Licensees should apprise themselves of current regulations especially with respect to certain countries, of other agencies, particularly the Office of Defense Trade Controls, Department of State (with respect to Arms, Munitions and Implements of War (22 CFR 121-128)); the Bureau of Industry and Security, Department of Commerce (15 CFR parts 730-774); the Office of Foreign AssetsControl, Department of Treasury (31 CFR Parts 500+) and the Department of Energy.

NOT GRANTED

No license under 35 U.S.C. 184 has been granted at this time, if the phrase "IF REQUIRED, FOREIGN FILING LICENSE GRANTED" DOES NOT appear on this form. Applicant may still petition for a license under 37 CFR 5.12, if a license is desired before the expiration of 6 months from the filing date of the application. If 6 months has lapsed from the filing date of this application and the licensee has not received any indication of a secrecy order under 35 U.S.C. 181, the licensee may foreign file the application pursuant to 37 CFR 5.15(b).

SelectUSA

The United States represents the largest, most dynamic marketplace in the world and is an unparalleled location for business investment, innovation, and commercialization of new technologies. The U.S. offers tremendous resources and advantages for those who invest and manufacture goods here. Through SelectUSA, our nation works to promote and facilitate business investment. SelectUSA provides information assistance to the international investor community; serves as an ombudsman for existing and potential investors; advocates on behalf of U.S. cities, states, and regions competing for global investment; and counsels U.S. economic development organizations on investment attraction best practices. To learn more about why the United States is the best country in the world to develop technology, manufacture products, deliver services, and grow your business, visit http://www.SelectUSA.gov or call +1-202-482-6800.

UNITED STATES PATENT AND TRADEMARK OFFICE

UNITED STATES DEPARTMENT OF COMMERCE
United States Patent and Trademark Office
Address: COMMISSIONER FOR PATENTS
P.O. Box 1450
Alexandria, Virginia 22313-1450
www.uspto.gov

APPLICATION NUMBER	FILING OR 371(C) DATE	FIRST NAMED APPLICANT	ATTY. DOCKET NO./TITLE
15/820,232	11/21/2017	Ahmnon D. Moskowitz	45335-0020002

CONFIRMATION NO. 1007

IMPROPER CFR REQUEST

26191
FISH & RICHARDSON P.C. (TC)
PO BOX 1022
MINNEAPOLIS, MN 55440-1022

OC000000096024553

Date Mailed: 12/13/2017

RESPONSE TO REQUEST FOR CORRECTED FILING RECEIPT

Continuity, Priority Claims, Petitions, and Non-Publication Requests

In response to your request for a corrected Filing Receipt, the Office is unable to comply with your request because:

- A claim for priority cannot be made based on an application filed after the application making the claim.

Questions about the contents of this notice and the requirements it sets forth should be directed to the Office of Data Management, Application Assistance Unit, at **(571) 272-4000** or **(571) 272-4200** or **1-888-786-0101**.

/hnguyen/

UNITED STATES PATENT AND TRADEMARK OFFICE

Commissioner for Patents
United States Patent and Trademark Office
P.O. Box 1450
Alexandria, VA 22313-1450
www.uspto.gov

FISH & RICHARDSON P.C. (TC)
PO BOX 1022
MINNEAPOLIS MN 55440-1022

MAILED
DEC 19 2017
OFFICE OF PETITIONS

Doc Code: TRACK1.GRANT

Decision Granting Request for Prioritized Examination (Track I or After RCE)	Application No.: 15/820,232

1. THE REQUEST FILED November 21, 2017 IS **GRANTED.**

The above-identified application has met the requirements for prioritized examination
A. ☒ for an original nonprovisional application (Track I).
B. ☐ for an application undergoing continued examination (RCE).

2. **The above-identified application will undergo prioritized examination.** The application will be accorded special status throughout its entire course of prosecution until one of the following occurs:

A. filing a **petition for extension of time** to extend the time period for filing a reply;
B. filing an **amendment to amend the application to contain more than four independent claims, more than thirty total claims**, or a multiple dependent claim;
C. filing a **request for continued examination**;
D. filing a notice of appeal;
E. filing a request for suspension of action;
F. mailing of a notice of allowance;
G. mailing of a final Office action;
H. completion of examination as defined in 37 CFR 41.102; or
I. abandonment of the application.

Telephone inquiries with regard to this decision should be directed to Brian W. Brown at 571-272-5338.

/Brian W. Brown/
[*Signature*]

Petitions Examiner, Office of Petitions
(Title)

U.S. Patent and Trademark Office
PTO-2298 (Rev. 02-2012)

IN THE UNITED STATES PATENT AND TRADEMARK OFFICE

First Named Inventor	:	Ahmnon D. Moskowitz	Art Unit	:	Unknown
Serial No.	:	15/820,232	Examiner	:	Unknown
Filed	:	November 21, 2017	Conf. No.	:	1007
Title	:	ZERO-PROFILE EXPANDABLE INTERVERTEBRAL SPACER DEVICES FOR DISTRACTION AND SPINAL FUSION AND A UNIVERSAL TOOL FOR THEIR PLACEMENT AND EXPANSION			

Commissioner for Patents
P.O. Box 1450
Alexandria, VA 22313-1450

PRELIMINARY AMENDMENT

Prior to examination, please amend the application as indicated on the following pages.

Amendments to the Specification:

Please replace the paragraphs [0001] and [0002] with the following paragraphs:

[0001] This application is a Continuation Application of application Serial No. 14/063,197, filed on October 25, 2013, which is a Continuation-in-part Application of co-pending application Serial No. 13/210,150, filed August 15, 2011, and a Continuation-in-part Application of co-pending application Serial No. 13/210,157, filed August 15, 2011, and a Continuation-in-part Application of co-pending application Serial No. 13/210,162, filed August 15, 211, and a Continuation-in-part Application of co-pending application Serial No. 13/210,168, filed August 15, 2011, and a Continuation-in-part Application of application Serial No. 13/741,361, filed on January 14, 2013, now U.S. Patent No. 9,301,854 issued April 5, 2016.

[0002] Serial No. 13/210,150, filed August 15, 2011, is a Continuation of application Serial No. 13/084,543, filed April 11, 2011, now U.S. Patent No. 8,353,913 issued on January 15, 2013, which is a Divisional of application Serial No. 11/842,855, filed August 21, 2007, now U.S. Patent No. 7,942,903 issued May 17, 2011 and a Continuation of application Serial No. 13/108,982, filed May 16, 2011, now U.S. Patent No. 9,005,293 issued April 14, 2015, which is a Continuation of application Serial No. 11/842,855, filed August 21, 2007, now U.S. Patent No. 7,942,903 issued May 17, 2011, which is a Continuation-in-part of application Serial No. 11/536,815, filed September 29, 2006, now U.S. Patent No. 7,846,188 issued December 7, 2010, which is a Continuation-in-part of 11/208,644, filed August 23, 2005, now U.S. Patent No. 7,704,279 issued April 4, 2010, which claims priority under 35 U.S.C. § 119(e) of U.S. provisional application No. 60/670,231, filed on April 12, 2005; the entire contents of all the above identified patent applications are hereby incorporated by reference.

[0003] Serial No. 13/210,157, filed August 15, 2011, is a Continuation of application Serial No. 13/804,543, filed April 11, 2011, now U.S. Patent No. January 15, 2013. Serial No. 13/210,162, filed August 15, 211, is a Continuation of application Serial No. 13/084,543, filed April 11, 2011, now U.S. Patent No. 8,353,913 issued January 15, 2013. Serial No. 13/210,168 is a Continuation of application Serial No. 13/084,543, filed April 11, 2011, now U.S. Patent No. 8,353,913 issued January 15, 2013. Serial No. 13/741,361 is a Continuation of application Serial No. 13/084,543, filed April 11, 2011, now U.S. Patent No. 8,353,913 issued January 15, 2013.

[0004] Serial No. 14/063,197, filed on October 25, 2013, claims priority under U.S.C. § 119(e) of U.S. provisional application Nos. 61/801,783, filed March 15, 2013 and 61/718,707, filed October 25, 2012.

REMARKS

In response to the communication of 12/13/2017, the specification is hereby amended to correctly reflect the chain of priority.

No fees are believed due. Please apply any necessary charges or credits to Deposit Account 06-1050, referencing the above attorney docket number.

Respectfully submitted,

Date: 1/4/2018

/Stuart A. Nelson/

Stuart A. Nelson
Reg. No. 63,947

Customer Number 26191
Fish & Richardson P.C.
Telephone: (612) 337-2538
Facsimile: (877) 769-7945

61610052.doc

IN THE UNITED STATES PATENT AND TRADEMARK OFFICE

First Named Inventor	:	Ahmnon D. Moskowitz	Art Unit	:	Unknown
Serial No.	:	15/820,232	Examiner	:	Unknown
Filed	:	November 21, 2017	Conf. No.	:	1007
Title	:	ZERO-PROFILE EXPANDABLE INTERVERTEBRAL SPACER DEVICES FOR DISTRACTION AND SPINAL FUSION AND A UNIVERSAL TOOL FOR THEIR PLACEMENT AND EXPANSION			

Commissioner for Patents
P.O. Box 1450
Alexandria, VA 22313-1450

REQUEST FOR CORRECTED OFFICIAL FILING RECEIPT

Please correct the Filing Receipt for the above-referenced application to include the priority application 13/108,982, filed May 16, 2011.

Please supply a corrected Filing Receipt to the undersigned with respect to this application.

No fee is believed to be due. If, however, there are any necessary charges or credits, please apply them to Deposit Account No. 06-1050, referencing the above attorney docket number.

Respectfully submitted,

Date: 1/4/2018

/Stuart A. Nelson/
Stuart A. Nelson
Reg. No. 63,947

Customer Number 26191
Fish & Richardson P.C.
Telephone: (612) 337-2538
Facsimile: (877) 769-7945

61610085.doc

Electronic Acknowledgement Receipt

EFS ID:	31405823
Application Number:	15820232
International Application Number:	
Confirmation Number:	1007
Title of Invention:	ZERO-PROFILE EXPANDABLE INTERVERTEBRAL SPACER DEVICES FOR DISTRACTION AND SPINAL FUSION AND A UNIVERSAL TOOL FOR THEIR PLACEMENT AND EXPANSION
First Named Inventor/Applicant Name:	Ahmnon D. Moskowitz
Customer Number:	26191
Filer:	Stuart A. Nelson/Abby Remer
Filer Authorized By:	Stuart A. Nelson
Attorney Docket Number:	45335-0020002
Receipt Date:	04-JAN-2018
Filing Date:	21-NOV-2017
Time Stamp:	14:16:44
Application Type:	Utility under 35 USC 111(a)

Payment information:

Submitted with Payment	no

File Listing:

Document Number	Document Description	File Name	File Size(Bytes)/ Message Digest	Multi Part /.zip	Pages (if appl.)
1		Prelim.pdf	71897 005ddd5b550a8f4c701dc6c4c5bfa33fe52d0a5b	yes	4

	Multipart Description/PDF files in .zip description		
	Document Description	**Start**	**End**
	Preliminary Amendment	1	1
	Specification	2	3
	Applicant Arguments/Remarks Made in an Amendment	4	4

Warnings:

Information:

2	Request for Corrected Filing Receipt	Request.pdf	51211 a1188af81c5c912bb6823027e0dd2c33d1d443cf	no	1

Warnings:

Information:

Total Files Size (in bytes):	123108

This Acknowledgement Receipt evidences receipt on the noted date by the USPTO of the indicated documents, characterized by the applicant, and including page counts, where applicable. It serves as evidence of receipt similar to a Post Card, as described in MPEP 503.

New Applications Under 35 U.S.C. 111
If a new application is being filed and the application includes the necessary components for a filing date (see 37 CFR 1.53(b)-(d) and MPEP 506), a Filing Receipt (37 CFR 1.54) will be issued in due course and the date shown on this Acknowledgement Receipt will establish the filing date of the application.
National Stage of an International Application under 35 U.S.C. 371
If a timely submission to enter the national stage of an international application is compliant with the conditions of 35 U.S.C. 371 and other applicable requirements a Form PCT/DO/EO/903 indicating acceptance of the application as a national stage submission under 35 U.S.C. 371 will be issued in addition to the Filing Receipt, in due course.
New International Application Filed with the USPTO as a Receiving Office
If a new international application is being filed and the international application includes the necessary components for an international filing date (see PCT Article 11 and MPEP 1810), a Notification of the International Application Number and of the International Filing Date (Form PCT/RO/105) will be issued in due course, subject to prescriptions concerning national security, and the date shown on this Acknowledgement Receipt will establish the international filing date of the application.

UNITED STATES PATENT AND TRADEMARK OFFICE

UNITED STATES DEPARTMENT OF COMMERCE
United States Patent and Trademark Office
Address: COMMISSIONER FOR PATENTS
P.O. Box 1450
Alexandria, Virginia 22313-1450
www.uspto.gov

APPLICATION NUMBER	FILING OR 371(C) DATE	FIRST NAMED APPLICANT	ATTY. DOCKET NO./TITLE
15/820,232	11/21/2017	Ahmnon D. Moskowitz	45335-0020002

CONFIRMATION NO. 1007

IMPROPER CFR REQUEST

26191
FISH & RICHARDSON P.C. (TC)
PO BOX 1022
MINNEAPOLIS, MN 55440-1022

"OC000000096519578"

Date Mailed: 01/09/2018

RESPONSE TO REQUEST FOR CORRECTED FILING RECEIPT

Power of Attorney, Claims, Fees, System Limitations, and Miscellaneous

In response to your request for a corrected Filing Receipt, the Office is unable to comply with your request because:

- An Application Data is needed to make this change

Questions about the contents of this notice and the requirements it sets forth should be directed to the Office of Data Management, Application Assistance Unit, at **(571) 272-4000** or **(571) 272-4200** or **1-888-786-0101**.

/mmasfaw/

UNITED STATES PATENT AND TRADEMARK OFFICE

UNITED STATES DEPARTMENT OF COMMERCE
United States Patent and Trademark Office
Address: COMMISSIONER FOR PATENTS
P.O. Box 1450
Alexandria, Virginia 22313-1450
www.uspto.gov

APPLICATION NO.	FILING DATE	FIRST NAMED INVENTOR	ATTORNEY DOCKET NO.	CONFIRMATION NO.
15/820,232	11/21/2017	Ahmnon D. Moskowitz	45335-0020002	1007

26191 7590 01/26/2018
FISH & RICHARDSON P.C. (TC)
PO BOX 1022
MINNEAPOLIS, MN 55440-1022

EXAMINER
PHILOGENE, PEDRO

ART UNIT	PAPER NUMBER
3733	

NOTIFICATION DATE	DELIVERY MODE
01/26/2018	ELECTRONIC

Please find below and/or attached an Office communication concerning this application or proceeding.

The time period for reply, if any, is set in the attached communication.

Notice of the Office communication was sent electronically on above-indicated "Notification Date" to the following e-mail address(es):

PATDOCTC@fr.com

PTOL-90A (Rev. 04/07)

Office Action Summary	Application No. 15/820,232	Applicant(s) MOSKOWITZ ET AL.	
	Examiner PEDRO PHILOGENE	Art Unit 3733	AIA (First Inventor to File) Status No

-- The MAILING DATE of this communication appears on the cover sheet with the correspondence address --

Period for Reply

A SHORTENED STATUTORY PERIOD FOR REPLY IS SET TO EXPIRE 3 MONTHS FROM THE MAILING DATE OF THIS COMMUNICATION.

- Extensions of time may be available under the provisions of 37 CFR 1.136(a). In no event, however, may a reply be timely filed after SIX (6) MONTHS from the mailing date of this communication.
- If NO period for reply is specified above, the maximum statutory period will apply and will expire SIX (6) MONTHS from the mailing date of this communication.
- Failure to reply within the set or extended period for reply will, by statute, cause the application to become ABANDONED (35 U.S.C. § 133). Any reply received by the Office later than three months after the mailing date of this communication, even if timely filed, may reduce any earned patent term adjustment. See 37 CFR 1.704(b).

Status

1)☒ Responsive to communication(s) filed on *11/28/17*.

☐ A declaration(s)/affidavit(s) under **37 CFR 1.130(b)** was/were filed on _____.

2a)☐ This action is **FINAL**. 2b)☒ This action is non-final.

3)☐ An election was made by the applicant in response to a restriction requirement set forth during the interview on _____; the restriction requirement and election have been incorporated into this action.

4)☐ Since this application is in condition for allowance except for formal matters, prosecution as to the merits is closed in accordance with the practice under *Ex parte Quayle*, 1935 C.D. 11, 453 O.G. 213.

Disposition of Claims*

5)☒ Claim(s) *2-20* is/are pending in the application.

5a) Of the above claim(s) _____ is/are withdrawn from consideration.

6)☐ Claim(s) _____ is/are allowed.

7)☒ Claim(s) *2-20* is/are rejected.

8)☐ Claim(s) _____ is/are objected to.

9)☐ Claim(s) _____ are subject to restriction and/or election requirement.

* If any claims have been determined allowable, you may be eligible to benefit from the **Patent Prosecution Highway** program at a participating intellectual property office for the corresponding application. For more information, please see http://www.uspto.gov/patents/init_events/pph/index.jsp or send an inquiry to PPHfeedback@uspto.gov.

Application Papers

10)☐ The specification is objected to by the Examiner.

11)☐ The drawing(s) filed on _____ is/are: a)☐ accepted or b)☐ objected to by the Examiner.

Applicant may not request that any objection to the drawing(s) be held in abeyance. See 37 CFR 1.85(a).

Replacement drawing sheet(s) including the correction is required if the drawing(s) is objected to. See 37 CFR 1.121(d).

Priority under 35 U.S.C. § 119

12)☐ Acknowledgment is made of a claim for foreign priority under 35 U.S.C. § 119(a)-(d) or (f).

Certified copies:

a)☐ All b)☐ Some** c)☐ None of the:

1.☐ Certified copies of the priority documents have been received.

2.☐ Certified copies of the priority documents have been received in Application No. _____.

3.☐ Copies of the certified copies of the priority documents have been received in this National Stage application from the International Bureau (PCT Rule 17.2(a)).

** See the attached detailed Office action for a list of the certified copies not received.

Attachment(s)

1) ☒ Notice of References Cited (PTO-892)

2) ☒ Information Disclosure Statement(s) (PTO/SB/08a and/or PTO/SB/08b) Paper No(s)/Mail Date *11/30/17*.

3) ☐ Interview Summary (PTO-413) Paper No(s)/Mail Date. _____ .

4) ☐ Other: _____.

The present application is being examined under the pre-AIA first to invent provisions.

Claim Rejections - 35 USC § 102

The following is a quotation of the appropriate paragraphs of pre-AIA 35 U.S.C. 102 that form the basis for the rejections under this section made in this Office action:

> A person shall be entitled to a patent unless –
>
> (e) the invention was described in (1) an application for patent, published under section 122(b), by another filed in the United States before the invention by the applicant for patent or (2) a patent granted on an application for patent by another filed in the United States before the invention by the applicant for patent, except that an international application filed under the treaty defined in section 351(a) shall have the effects for purposes of this subsection of an application filed in the United States only if the international application designated the United States and was published under Article 21(2) of such treaty in the English language.

Claim(s) 2-20 is/are rejected under pre-AIA 35 U.S.C. 102(e) as being anticipated by Palmatier et al. (9,445,919).

With respect to claims 2, 15, 20 Palmatier discloses an expandable interbody device (540), as best seen in at least FIGS.17-21, comprising a first housing (546) extending from a first end to a second end, wherein the first housing has first and second end portions positioned at the first and second ends, respectively, and has first and second side portions extending between the first and second end portions, wherein the first housing has a first vertebral body engagement surface (552) and has a first interior surface positioned on an opposite of the first housing than the first vertebral body engagement , as best seen in at least Fig.17; a second housing (548) extending from a third and fourth end, wherein the second housing has a third and fourth end portions positioned at the third and fourth ends, respectively, and has third and fourth side portions extending between the third and fourth end portions, wherein the second

housing has a second vertebra engagement surface (578), wherein the first housing is aligned with the second housing such that the first end of the first housing is axially aligned with the third end of the second housing and the second end of the first housing is axially aligned with the fourth end of the second housing, as best seen in at least FIg.17, wherein the first end portion of the first housing is hingedly connected to the third end portion of the second housing such that the first housing can pivot with respect to the second housing so as to move the second end portion of the fist housing away from the fourth end portion of the second housing, as set forth in column 15, lines 9-23, wherein the second housing defines a slot in the fourth end portion between the third and fourth side portions that is sized to receive the second end portion of the first housing such that the second end of the first housing and the fourth end of the second housing are axially aligned, as best seen in at least FIGS.17-21; a wedge (558) extending from a fifth end to a sixth end and having an angle wedge surface, as best seen in at least Fig.17,extending along at least a portion of a distance between the fifth end and the sixth end, wherein the wedge is positioned between the first housing and the second housing with the angle wedge surface facing the first interior surface of the first housing, wherein the first interior surface of the first housing has an angled housing surface shaped to engaged the angled wedge surface of the wedge, as best seen in at least FIGS.17-21, wherein the a distance from the fifth end to the sixth end of the wedge is less than a distance from the first end to the second end of the first housing and is less than a distance from the third end to the fourth end of the second housing , wherein the wedge is configured to slide within a space defined by the first and second housings

in a direction toward the second and fourth ends of the first and second housings in a direction toward the second and fourth ends of the first and second housing from a first wedge position that allows the first and second housings to pivot to a housing position that is substantially closed to a second wedge position whereby the angled wedge surface presses against the first interior surface of the first housing to hingedly open the first housing with respect to the second housing whereby the wedge remains axially confined within the space defined by the first and second housings in the first and second wedge positions; as best seen in at least FIGS.17-21, and as set forth in columns 15-17, lines 1-65; column 18, lines 1-37; and a rotation screw (592) operably connected to the wedge and the second housings, wherein rotation of the rotation screw moves the wedge in an axially translating direction with respect to the first housing and he second housing within the space defined by the first and second housings from the first wedge positons to the second wedge position, as set forth in column 15-17, lines 1-67, column 8, lines 1-37.

With respect to claims 2-13, 16-18 Palmatier discloses all the limitations, as best seen in at least FIGS.17-21, and as set forth in column 15-17, lines 1-67, column 8, lines 1-37.

With respect to claims 14, 19, the method steps, as set forth, would have been inherently carried out in the operation of the device, as set forth above.

Conclusion

The prior art made of record and not relied upon is considered pertinent to applicant's disclosure.

2006/0206207	9-2006	Dryer et al.
8,062,375	11-2011	Glerum et al.
2011/0172774	7-2011	Varela
2013/0211526	8-2013	Alheidt et al.

Any inquiry concerning this communication or earlier communications from the examiner should be directed to PEDRO PHILOGENE whose telephone number is (571)272-4716. The examiner can normally be reached on Monday to Friday 8:00 AM to 4:30 PM.

Examiner interviews are available via telephone, in-person, and video conferencing using a USPTO supplied web-based collaboration tool. To schedule an interview, applicant is encouraged to use the USPTO Automated Interview Request (AIR) at http://www.uspto.gov/interviewpractice.

If attempts to reach the examiner by telephone are unsuccessful, the examiner's supervisor, Eduardo Robert can be reached on (571) 272 - 4719. The fax phone number for the organization where this application or proceeding is assigned is 571-273-8300.

Information regarding the status of an application may be obtained from the Patent Application Information Retrieval (PAIR) system. Status information for published applications may be obtained from either Private PAIR or Public PAIR. Status information for unpublished applications is available through Private PAIR only. For more information about the PAIR system, see http://pair-direct.uspto.gov. Should you have questions on access to the Private PAIR system, contact the Electronic Business Center (EBC) at 866-217-9197 (toll-free). If you would like assistance from a USPTO Customer Service Representative or access to the automated information system, call 800-786-9199 (IN USA OR CANADA) or 571-272-1000.

/PEDRO PHILOGENE/
Primary Examiner, Art Unit 3733
January 19, 2018

Notice of References Cited	Application/Control No. 15/820,232	Applicant(s)/Patent Under Reexamination MOSKOWITZ ET AL.	
	Examiner PEDRO PHILOGENE	Art Unit 3733	Page 1 of 1

U.S. PATENT DOCUMENTS

*		Document Number Country Code-Number-Kind Code	Date MM-YYYY	Name	CPC Classification	US Classification
*	A	US-2013/0211526 A1	08-2013	Alheidt; Thomas	A61F2/4611	623/17.16
*	B	US-2011/0172774 A1	07-2011	VARELA; Armando	A61F2/447	623/17.16
*	C	US-8,062,375 B2	11-2011	Glerum; Chad	A61F2/447	606/279
*	D	US-2006/0206207 A1	09-2006	Dryer; Randall F.	A61F2/446	623/17.11
*	E	US-9,445,919 B2	09-2016	Palmatier; Stanley T.	A61F2/447	1/1
	F	US-				
	G	US-				
	H	US-				
	I	US-				
	J	US-				
	K	US-				
	L	US-				
	M	US-				

FOREIGN PATENT DOCUMENTS

*		Document Number Country Code-Number-Kind Code	Date MM-YYYY	Country	Name	CPC Classification
	N					
	O					
	P					
	Q					
	R					
	S					
	T					

NON-PATENT DOCUMENTS

*		Include as applicable: Author, Title Date, Publisher, Edition or Volume, Pertinent Pages)
	U	
	V	
	W	
	X	

*A copy of this reference is not being furnished with this Office action. (See MPEP § 707.05(a).)
Dates in MM-YYYY format are publication dates. Classifications may be US or foreign.

Substitute Disclosure Form U.S. Department of Commerce Patent and Trademark Office	Attorney Docket No. 45335-0020002	Application No. 15/820,232
Information Disclosure Statement by Applicant (Use several sheets if necessary)	Applicant Dr. Nathan C. Moskowitz	
(37 CFR §1.98(b))	Filing Date November 21, 2017	Group Art Unit

U.S. Patent Documents

Examiner Initial	Desig. ID	Document Number	Publication Date	Patentee	Class	Subclass	Filing Date If Appropriate
	1.	2360942	1944-10-24	ELLERSTEIN			
	2.	4064881	1977-12-27	Meredith			
	3.	4554914	1985-11-26	Kapp et al.			
	4.	4599086	1986-07-08	DOTY			
	5.	4636217	1987-01-13	Ogilvie et al.			
	6.	4904261	1990-02-27	Dove et al.			
	7.	4960420	1990-10-02	Goble et al.			
	8.	4997432	1991-03-05	Keller			
	9.	5005749	1991-04-09	Aranyi			
	10.	5062850	1991-11-05	MACMILLAN et al.			
	11.	5123926	1992-06-23	Pisharodi			
	12.	5290312	1994-03-01	KOJIMOTO et al.			
	13.	5405391	1995-04-11	Henderson et al.			
	14.	5413583	1995-05-09	Wohlers			
	15.	5454819	1995-10-03	Knoepfler			
	16.	5514180	1996-05-07	Heggeness et al.			
	17.	5660188	1997-08-26	Groiso			
	18.	5667472	1997-09-07	Finn et al.			
	19.	5713912	1998-02-03	Porter			
	20.	5782832	1998-07-21	Larsen et al.			
	21.	5865848	1999-02-02	Baker			
	22.	5888223	1999-03-30	Bray, Jr.			
	23.	5916224	1999-06-29	Esplin			
	24.	5951574	1999-09-14	Stefanchik et al.			
	25.	5960522	1999-10-05	Boe			
	26.	5968054	1999-10-19	Yeatts et al.			

Examiner Signature	Date Considered
/PEDRO PHILOGENE/	01/19/2018

EXAMINER: Initials citation considered. Draw line through citation if not in conformance and not considered. Include copy of this form with next communication to applicant.

Substitute Disclosure Form

ALL REFERENCES CONSIDERED EXCEPT WHERE LINED THROUGH. /P.P/

Substitute Disclosure Form U.S. Department of Commerce Patent and Trademark Office	Attorney Docket No. 45335-0020002	Application No. 15/820,232
Information Disclosure Statement by Applicant (Use several sheets if necessary)	Applicant Dr. Nathan C. Moskowitz	
(37 CFR §1.98(b))	Filing Date November 21, 2017	Group Art Unit

U.S. Patent Documents

Examiner Initial	Desig. ID	Document Number	Publication Date	Patentee	Class	Subclass	Filing Date If Appropriate
	27.	5976136	1999-11-02	Bailey et al.			
	28.	6126689	2000-10-03	Brett			
	29.	6224602	5/1/2001	Hayes			
	30.	6235034	5/22/2001	Bray			
	31.	6322562	11/27/2001	Wolter			
	32.	6342074	2002-01-29	Simpson			
	33.	6368350	2002-04-09	Erickson et al.			
	34.	6375682	2002-04-23	Fleischmann et al.			
	35.	20020068977	2002-06-06	JACKSON			
	36.	6419704	2002-07-16	Ferree			
	37.	6432106	2002-08-13	Fraser			
	38.	6454807	09-2002	Jackson			
	39.	6458159	2002-10-01	Thalgott			
	40.	20020143338	2002-10-03	ORBAYet al.			
	41.	6527804	2003-03-04	Gauchet et al.			
	42.	6533818	2003-03-18	Weber et al.			
	43.	6558423	2003-05-06	Michelson			
	44.	6572653	2003-06-03	Simonson			
	45.	6579318	2003-06-17	Varga et al.			
	46.	6582468	2003-06-24	Gauchet			
	47.	20030130737	2003-07-10	MCGAHAN et al.			
	48.	6613055	2003-09-02	Di Emidio			
	49.	6629998	2003-10-07	Lin			
	50.	6641614	2003-11-04	Wagner et al.			
	51.	6655243	2003-12-02	Anderson et al.			
	52.	6716247	4/6/2004	Michelson			

Examiner Signature	Date Considered
/PEDRO PHILOGENE/	01/19/2018

EXAMINER: Initials citation considered. Draw line through citation if not in conformance and not considered. Include copy of this form with next communication to applicant.

Substitute Disclosure Form

ALL REFERENCES CONSIDERED EXCEPT WHERE LINED THROUGH. /P.P/

Substitute Disclosure Form U.S. Department of Commerce Patent and Trademark Office	Attorney Docket No. 45335-0020002	Application No. 15/820,232
Information Disclosure Statement by Applicant (Use several sheets if necessary)	Applicant Dr. Nathan C. Moskowitz	
(37 CFR §1.98(b))	Filing Date November 21, 2017	Group Art Unit

U.S. Patent Documents

Examiner Initial	Desig. ID	Document Number	Publication Date	Patentee	Class	Subclass	Filing Date If Appropriate
	53.	6719794	2004-04-13	Gerber			
	54.	6723126	2004-04-20	Berry			
	55.	20040088054	2004-05-06	Berry			
	56.	6733532	2004-05-11	Gauchet et al.			
	57.	6764491	2004-07-20	Frey et al.			
	58.	6770094	2004-08-03	Fehling et al.			
	59.	20040177531	2004-09-16	DiBenedetto et al.			
	60.	20040186569	9/23/2004	Berry			
	61.	20040193272	2004-09-30	Zubok et al.			
	62.	20040220571	2004-11-04	Assaker et al.			
	63.	6824564	2004-11-30	Crozet			
	64.	20040254644	2004-12-16	Taylor			
	65.	20050027362	2005-02-03	Williams et al.			
	66.	6852117	2005-02-08	Orlowski			
	67.	20050049590	2005-03-03	Alleyne et al.			
	68.	6890355	5/10/2005	Michelson			
	69.	6904308	2005-06-07	Frisch et al.			
	70.	20050177235	2005-08-11	BAYNHAM et al.			
	71.	20050216084	2005-09-29	Fleischmann			
	72.	6953477	2005-10-11	BERRY			
	73.	6955671	2005-10-18	Uchikubo			
	74.	6962606	2005-11-08	MICHELSON			
	75.	20050256576	11/17/2005	Moskowitz et al.			
	76.	20050261769	11/24/2005	Moskowitz et al.			
	77.	6972019	2005-12-06	Michelson			
	78.	20050273170	2005-12-08	Navarro et al.			

Examiner Signature	Date Considered
/PEDRO PHILOGENE/	01/19/2018

EXAMINER: Initials citation considered. Draw line through citation if not in conformance and not considered. Include copy of this form with next communication to applicant.

Substitute Disclosure Form

ALL REFERENCES CONSIDERED EXCEPT WHERE LINED THROUGH. /P.P/

Substitute Disclosure Form U.S. Department of Commerce Patent and Trademark Office	Attorney Docket No. 45335-0020002	Application No. 15/820,232
Information Disclosure Statement by Applicant (Use several sheets if necessary)	Applicant Dr. Nathan C. Moskowitz	
(37 CFR §1.98(b))	Filing Date November 21, 2017	Group Art Unit

U.S. Patent Documents

Examiner Initial	Desig. ID	Document Number	Publication Date	Patentee	Class	Subclass	Filing Date If Appropriate
	79.	6974480	2005-12-13	Messerli et al.			
	80.	20050278026	2005-12-15	Gordon, et al.			
	81.	7030904	2006-04-18	Adair et al.			
	82.	7033394	2006-04-25	Michelson			
	83.	7037258	2006-05-02	Chatenever et al.			
	84.	20060155285	2006-07-13	Anderson			
	85.	7077864	2006-07-18	Byrd et al.			
	86.	7097615	2006-08-29	Banik et al.			
	87.	20060241621	10/26/2006	Moskowitz et al.			
	88.	7135043	2006-11-14	NAKAHARA et al.			
	89.	2007/0049943	3/1/2007	Moskowitz et al.			
	90.	7211112	2007-05-01	Baynham et al.			
	91.	7232464	2007-06-19	Mathieu et al.			
	92.	7238203	2007-07-03	Bagga et al.			
	93.	20070167678	7/19/2007	Moskowitz et al.			
	94.	20070198089	8/23/2007	Moskowitz et al.			
	95.	20070213820	2007-09-13	MAGERL et al			
	96.	20070250167	2007-10-25	BRAY et al.			
	97.	2007/0250172	10/25/2007	Moskowitz et al.			
	98.	20070276498	2007-11-29	AEBI et al.			
	99.	7326248	2008-02-05	Michelson			
	100.	2008/0033440	2/7/2008	Moskowitz et al.			
	101.	2008/0177307	7/24/2008	Moskowitz et al.			
	102.	20080183293	2008-07-31	Parry et al.			
	103.	20080249575	2008-10-09	Waugh et al.			
	104.	20080249569	2008-10-09	Waugh et al.			

Examiner Signature	Date Considered
/PEDRO PHILOGENE/	01/19/2018

EXAMINER: Initials citation considered. Draw line through citation if not in conformance and not considered. Include copy of this form with next communication to applicant.

Substitute Disclosure Form

ALL REFERENCES CONSIDERED EXCEPT WHERE LINED THROUGH. /P.P/

Substitute Disclosure Form U.S. Department of Commerce Patent and Trademark Office	Attorney Docket No. 45335-0020002	Application No. 15/820,232
Information Disclosure Statement by Applicant (Use several sheets if necessary)	Applicant Dr. Nathan C. Moskowitz	
(37 CFR §1.98(b))	Filing Date November 21, 2017	Group Art Unit

U.S. Patent Documents

Examiner Initial	Desig. ID	Document Number	Publication Date	Patentee	Class	Subclass	Filing Date If Appropriate
	105.	20080249625	2008-10-09	Waugh et al.			
	106.	7442299	2008-10-28	Lee et al.			
	107.	7442209	2008-10-28	Michelson			
	108.	20080281425	2008-11-13	THALGOTT et al.			
	109.	20080281424	11/13/2008	Parry et al.			
	110.	20090030520	2009-01-29	BIEDERMANN et al.			
	111.	20090080997	2009-03-26	JOHNSON			
	112.	20090105831	2009-04-23	Jones et al.			
	113.	20090105830	2009-04-23	Jones et al.			
	114.	20090105831	4/23/2009	Jones et al.			
	115.	20090112271	4/30/2009	Moskowitz et al.			
	116.	20090182430	2009-07-16	TYBER et al.			
	117.	20090187218	2009-07-23	Schaffhausen			
	118.	20090210062	2009-08-20	THALGOTT et al.			
	119.	2009/0224023	9/10/2009	Moskowitz et al.			
	120.	2009/0234455	9/17/2009	Moskowitz et al.			
	121.	7615059	2009-11-10	Watschke et al.			
	122.	7618456	2009-11-17	Mathieu et al.			
	123.	7628816	2009-12-08	Magerl et al.			
	124.	7704279	2010-04-27	MOSKOWITZ et al.			
	125.	7727246	2010-06-01	Sixto et al.			
	126.	20100145460	2010-06-10	McDonough et al.			
	127.	7776093	2010-08-17	Wolek et al.			
	128.	7776047	8/17/2010	Fanger et al.			
	129.	7799081	09-2010	McKinley			
	130.	7803162	2010-09-28	MARNAY et al.			

Examiner Signature	Date Considered
/PEDRO PHILOGENE/	01/19/2018

EXAMINER: Initials citation considered. Draw line through citation if not in conformance and not considered. Include copy of this form with next communication to applicant.

Substitute Disclosure Form

ALL REFERENCES CONSIDERED EXCEPT WHERE LINED THROUGH. /P.P/

Substitute Disclosure Form U.S. Department of Commerce Patent and Trademark Office	Attorney Docket No. 45335-0020002	Application No. 15/820,232
Information Disclosure Statement by Applicant (Use several sheets if necessary)	Applicant Dr. Nathan C. Moskowitz	
(37 CFR §1.98(b))	Filing Date November 21, 2017	Group Art Unit

U.S. Patent Documents

Examiner Initial	Desig. ID	Document Number	Publication Date	Patentee	Class	Subclass	Filing Date If Appropriate
	131.	7850733	12-2010	Baynham			
	132.	20100305704	2010-12-02	Messerli et al.			
	133.	7846207	2010-12-07	Lechmann et al.			
	134.	2010/0324606	12/23/2010	Moskowitz et al.			
	135.	7862616	2011-01-04	Lechmann et al.			
	136.	7887591	2011-02-15	Aebi et al.			
	137.	7942903	2011-05-17	MOSKOWITZ et al.			
	138.	2011/0125269	5/26/2011	Moskowitz et al.			
	139.	2011/0137349	6/9/2011	Moskowitz et al.			
	140.	7959675	2011-06-14	Gately			
	141.	7972363	2011-07-05	Moskowitz et al.			
	142.	2011/0178600	7/21/2011	Moskowitz et al.			
	143.	7985255	2011-07-26	BRAY et al.			
	144.	20110208312	8/25/2011	Moskowitz et al.			
	145.	8029512	2011-10-04	Paltzer			
	146.	8034060	2011-10-11	Keren et al.			
	147.	20110288646	11/24/2011	Moskowitz et al.			
	148.	2011/0295327	12/1/2011	Moskowitz et al.			
	149.	2011/0295371	12/1/2011	Moskowitz et al.			
	150.	2011/0307011	12/15/2011	Moskowitz et al.			
	151.	2011/0319935	12/29/2011	Moskowitz et al.			
	152.	2012/0010714	1/12/2012	Moskowitz et al.			
	153.	8105367	2012-01-31	AUSTIN et al.			
	154.	8114162	2012-02-14	BRADLEY			
	155.	8137405	2012-03-20	KOSTUIK et al.			
	156.	8167949	2012-05-01	TYBER et al.			

Examiner Signature	Date Considered
/PEDRO PHILOGENE/	01/19/2018

EXAMINER: Initials citation considered. Draw line through citation if not in conformance and not considered. Include copy of this form with next communication to applicant.

Substitute Disclosure Form

ALL REFERENCES CONSIDERED EXCEPT WHERE LINED THROUGH. /P.P/

Substitute Disclosure Form U.S. Department of Commerce Patent and Trademark Office	Attorney Docket No. 45335-0020002	Application No. 15/820,232
Information Disclosure Statement by Applicant (Use several sheets if necessary)	Applicant Dr. Nathan C. Moskowitz	
(37 CFR §1.98(b))	Filing Date November 21, 2017	Group Art Unit

U.S. Patent Documents

Examiner Initial	Desig. ID	Document Number	Publication Date	Patentee	Class	Subclass	Filing Date If Appropriate
	157.	8268000	2012-09-18	WAUGH et al.			
	158.	8273127	2012-09-25	Jones et al.			
	159.	20120271423	2012-10-25	Wallenstein et al.			
	160.	20120277870	2012-11-01	Wolters et al.			
	161.	8328872	2012-12-11	Duffield et al.			
	162.	20120323330	2012-12-20	Kueenzi et al.			
	163.	2012/0330419	12/27/2012	Moskowitz et al.			
	164.	8353913	2013-01-15	Moskowitz et al.			
	165.	2013/0018468	1/17/2013	Moskowitz et al.			
	166.	2013/0018469	1/17/2013	Moskowitz et al.			
	167.	2013/0018470	1/17/2013	Moskowitz et al.			
	168.	2013/0023991	1/24/2013	Moskowitz et al.			
	169.	2013/0023992	1/24/2013	Moskowitz et al.			
	170.	2013/0053962	2/28/2013	Moskowitz et al.			
	171.	20130060339	2013-03-07	Duffield et al.			
	172.	20130073044	2013-03-21	Gamache			
	173.	8403986	2013-03-26	Michelson			
	174.	8414651	2013-04-09	TYBER et al.			
	175.	8419797	2013-04-16	Biedermann et al.			
	176.	8425607	2013-04-23	Waugh et al.			
	177.	20130173002	7/4/2013	Moskowitz et al.			
	178.	8535380	09-2013	Greenhalgh			
	179.	8540774	2013-09-24	KUEENZI et al.			
	180.	2013/0282017	10/24/2013	Moskowitz et al.			
	181.	8613761	2013-12-24	Lindemann et al.			
	182.	8728165	2014-05-20	PARRY et al.			

Examiner Signature	Date Considered
/PEDRO PHILOGENE/	01/19/2018

EXAMINER: Initials citation considered. Draw line through citation if not in conformance and not considered. Include copy of this form with next communication to applicant.

Substitute Disclosure Form

ALL REFERENCES CONSIDERED EXCEPT WHERE LINED THROUGH. /P.P/

Substitute Disclosure Form U.S. Department of Commerce Patent and Trademark Office	Attorney Docket No. 45335-0020002	Application No. 15/820,232
Information Disclosure Statement by Applicant (Use several sheets if necessary)	Applicant Dr. Nathan C. Moskowitz	
(37 CFR §1.98(b))	Filing Date November 21, 2017	Group Art Unit

U.S. Patent Documents

Examiner Initial	Desig. ID	Document Number	Publication Date	Patentee	Class	Subclass	Filing Date If Appropriate
	183.	8790405	2014-07-29	BIEDERMANN			
	184.	2014/0249629	9/4/2014	Moskowitz et al.			
	185.	2015/0025637	1/22/2015	Moskowitz et al.			
	186.	2015/0105824	4/16/2015	Moskowitz et al.			
	187.	2015/0148847	5/28/2015	Moskowitz et al.			
	188.	2016/0374830	12/29/2016	Moskowitz et al.			
	189.	2017/0252178	9/7/2017	Moskowitz et al.			
	190.	8062375	11/22/2011	Glerum et a].			
	191.	8267939	9/18/2012	Cipoletti et al.			
	192.	8603170	12/10/2013	Cipoletti et al.			
	193.	8721723	5/13/2014	Hansell et al.			
	194.	20140249628	9/4/2014	Weiman			
	195.	D626233	10/26/2010	Cipoletti et a1.			
	196.	20100168862	7/1/2010	Edie et al.			
	197.	20100318189	12/16/2010	Edie et al.			
	198.	20120271419	10/25/2012	Marik			
	199.	20120277865	11/1/2012	Trieu et al.			
	200.	20130158663	6/20/2013	Miller et al.			
	201.	20140088714	3/27/2014	Miller et al.			
	202.	20130158664	6/20/2013	Palmatier et al.			
	203.	8398713	3/19/2013	Weiman			
	204.	8435298	5/7/2013	Weiman			
	205.	8491659	7/23/2013	Weiman			
	206.	8632595	1/21/2014	Weiman			
	207.	8845731	9/30/2014	Weiman			
	208.	8845732	9/30/2014	Weiman			

Examiner Signature	Date Considered
/PEDRO PHILOGENE/	01/19/2018

EXAMINER: Initials citation considered. Draw line through citation if not in conformance and not considered. Include copy of this form with next communication to applicant.

Substitute Disclosure Form

ALL REFERENCES CONSIDERED EXCEPT WHERE LINED THROUGH. /P.P/

Substitute Disclosure Form U.S. Department of Commerce Patent and Trademark Office	Attorney Docket No. 45335-0020002	Application No. 15/820,232
Information Disclosure Statement by Applicant (Use several sheets if necessary)	Applicant Dr. Nathan C. Moskowitz	
(37 CFR §1.98(b))	Filing Date November 21, 2017	Group Art Unit

U.S. Patent Documents

Examiner Initial	Desig. ID	Document Number	Publication Date	Patentee	Class	Subclass	Filing Date If Appropriate
	209.	8845734	9/30/2014	Weimann			
	210.	8518120	8/27/2013	Glerum et al.			
	211.	8556979	10/15/2013	Glerum et al.			
	212.	8679183	3/25/2014	Glerum et al.			
	213.	8685098	4/1/2014	Glerum et al.			
	214.	8709086	4/29/2014	Glerum			
	215.	8888853	11/18/2014	Glerum et al.			
	216.	8888854	11/18/2014	Glerum et al.			
	217.	8926704	1/6/2015	Glerum et al.			
	218.	9034045	5/19/2015	Davenport et al.			
	219.	9198772	12/1/2015	Weimann			
	220.	5653763	8/5/1997	Errico et al.			
	221.	5658336	8/19/1997	Pisharodi			
	222.	5665122	9/9/1997	Kambin			
	223.	5980522	11/9/1999	Koros et al.			
	224.	6102950	8/15/2000	Vaccaro			
	225.	6190414	2/20/2001	Young et al.			
	226.	6193757	2/27/2001	Foley et al.			
	227.	6299642	10/9/2001	Chan			
	228.	6368351	4/9/2002	Glenn et al.			
	229.	6419705	4/9/2002	Glenn et al.			
	230.	6491724	12/10/2002	Ferree			
	231.	6835206	12/28/2004	Jackson			
	232.	6955691	10/18/2005	Ayyanathan et al.			
	233.	7070598	7/4/2006	Lim et al.			
	234.	7087055	8/8/2006	Lim et al.			

Examiner Signature	Date Considered
/PEDRO PHILOGENE/	01/19/2018

EXAMINER: Initials citation considered. Draw line through citation if not in conformance and not considered. Include copy of this form with next communication to applicant.

Substitute Disclosure Form

ALL REFERENCES CONSIDERED EXCEPT WHERE LINED THROUGH. /P.P/

Substitute Disclosure Form U.S. Department of Commerce Patent and Trademark Office	Attorney Docket No. 45335-0020002	Application No. 15/820,232
Information Disclosure Statement by Applicant (Use several sheets if necessary)	Applicant Dr. Nathan C. Moskowitz	
(37 CFR §1.98(b))	Filing Date November 21, 2017	Group Art Unit

U.S. Patent Documents

Examiner Initial	Desig. ID	Document Number	Publication Date	Patentee	Class	Subclass	Filing Date If Appropriate
	235.	7118579	10/10/2006	Michelson			
	236.	7214243	5/8/2007	Taylor et al.			
	237.	7320555	1/22/2008	Chang et al.			
	238.	7410501	8/12/2008	Michelson			
	239.	7445636	11/4/2008	Michelson			
	240.	7655027	2/2/2010	Michelson			
	241.	7655046	2/2/2010	Dryer et al.			
	242.	7722674	5/25/2010	Grotz et al.			
	243.	7753958	7/13/2010	Gordon et al.			
	244.	7763078	7/27/2010	Peterman et al.			
	245.	7828849	11/9/2010	Lim			
	246.	7846185	12/7/2010	Carls et al.			
	247.	7850733	12/14/2010	Baynham et al.			
	248.	7875078	1/25/2011	Wysocki et al.			
	249.	7909869	3/22/2011	Gordon et al.			
	250.	8062375	11/22/2011	Glerum et al.			
	251.	8105358	1/31/2012	Phan			
	252.	8105382	1/31/2012	Olmos et al.			
	253.	8123810	2/28/2012	Gordon et al.			
	254.	8133232	3/13/2012	Levy et al.			
	255.	8187332	5/29/2012	McLuen			
	256.	8382842	2/26/2013	Greenhalgh et al.			
	257.	8394145	3/12/2013	Weiman			
	258.	8403990	3/26/2013	Dryer et al.			
	259.	8496706	7/30/2013	Ragab et al.			
	260.	8523944	9/3/2013	Jimenez et al.			

Examiner Signature	Date Considered
/PEDRO PHILOGENE/	01/19/2018

EXAMINER: Initials citation considered. Draw line through citation if not in conformance and not considered. Include copy of this form with next communication to applicant.

Substitute Disclosure Form

ALL REFERENCES CONSIDERED EXCEPT WHERE LINED THROUGH. /P.P/

Substitute Disclosure Form U.S. Department of Commerce Patent and Trademark Office	Attorney Docket No. 45335-0020002	Application No. 15/820,232
Information Disclosure Statement by Applicant (Use several sheets if necessary)	Applicant Dr. Nathan C. Moskowitz	
(37 CFR §1.98(b))	Filing Date November 21, 2017	Group Art Unit

U.S. Patent Documents

Examiner Initial	Desig. ID	Document Number	Publication Date	Patentee	Class	Subclass	Filing Date If Appropriate
	261.	8568481	10/29/2013	Olmos et al.			
	262.	8628577	1/14/2014	Jimenez			
	263.	8628578	1/14/2014	Miller et al.			
	264.	8663329	3/4/2014	Ernst			
	265.	8685095	4/1/2014	Miller et al.			
	266.	8778025	7/15/2014	Ragab et al.			
	267.	8795366	8/5/2014	Varela			
	268.	8894711	11/25/2014	Varela			
	269.	8894712	11/25/2014	Varela			
	270.	8940049	1/27/2015	Jimenez et al.			
	271.	9039771	5/26/2015	Glerum et al.			
	272.	9119730	9/1/2015	Glerum et al.			
	273.	20020068976	6/6/2002	Jackson			
	274.	20040010315	1/15/2004	Song			
	275.	20040087947	5/6/2004	Lim et al.			
	276.	20040249466	12/9/2004	Liu et al.			
	277.	20050113916	5/26/2005	Branch			
	278.	20050113917	5/26/2005	Chae et al.			
	279.	20060241643	10/26/2006	Lim et al.			
	280.	20060241770	10/26/2006	Rhoda et al.			
	281.	20060247778	11/2/2006	Ferree et al.			
	282.	20070270968	11/22/2007	Baynham et al.			
	283.	20080058938	3/6/2008	Mujwid			
	284.	20090112319	4/30/2009	O'Neil et al.			
	285.	20090171461	7/2/2009	Conner et al.			
	286.	20090292361	11/26/2009	Lopez et al.			

Examiner Signature	Date Considered
/PEDRO PHILOGENE/	01/19/2018

EXAMINER: Initials citation considered. Draw line through citation if not in conformance and not considered. Include copy of this form with next communication to applicant.

Substitute Disclosure Form

ALL REFERENCES CONSIDERED EXCEPT WHERE LINED THROUGH. /P.P/

Substitute Disclosure Form	U.S. Department of Commerce Patent and Trademark Office	Attorney Docket No. 45335-0020002	Application No. 15/820,232
Information Disclosure Statement by Applicant (Use several sheets if necessary)		Applicant Dr. Nathan C. Moskowitz	
(37 CFR §1.98(b))		Filing Date November 21, 2017	Group Art Unit

U.S. Patent Documents

Examiner Initial	Desig. ID	Document Number	Publication Date	Patentee	Class	Subclass	Filing Date If Appropriate
	287.	20090299478	12/3/2009	Carls et al.			
	288.	20100057208	3/4/2010	Dryer et al.			
	289.	20100204795	8/12/2010	Greenhalgh			
	290.	20100286780	11/11/2010	Dryer et al.			
	291.	20100286783	12/24/2010	Ueda			
	292.	20100292796	11/18/2010	Greenhalgh et al.			
	293.	20110015742	1/20/2011	Hong			
	294.	20110029082	2/3/2011	Hall			
	295.	20110054621	3/3/2011	Lim			
	296.	20110093074	4/21/2011	Glerum et al.			
	297.	20110172721	7/14/2011	Frigg et al.			
	298.	20110172774	7/14/2011	Varela			
	299.	20120035729	2/9/2012	Glerum et al.			
	300.	20120109319	5/3/2012	Perisic			
	301.	20120150304	6/14/2012	Glerum et al.			
	302.	20120150305	6/14/2012	Glerum et al.			
	303.	20120158146	6/21/2012	Glerum et al.			
	304.	20120158147	6/21/2012	Glerum et al.			
	305.	20120158148	6/21/2012	Glerum et al.			
	306.	20130144388	6/6/2013	Emery et al.			
	307.	20140121774	5/1/2014	Glerum et al.			
	308.	20140324171	10/30/2014	Glerum et al.			

Foreign Patent Documents or Published Foreign Patent Applications

Examiner Initial	Desig. ID	Document Number	Publication Date	Country or Patent Office	Class	Subclass	Translation Yes	Translation No

Examiner Signature	Date Considered
/PEDRO PHILOGENE/	01/19/2018

EXAMINER: Initials citation considered. Draw line through citation if not in conformance and not considered. Include copy of this form with next communication to applicant.

Substitute Disclosure Form

ALL REFERENCES CONSIDERED EXCEPT WHERE LINED THROUGH. /P.P/

Substitute Disclosure Form U.S. Department of Commerce Patent and Trademark Office	Attorney Docket No. 45335-0020002	Application No. 15/820,232
Information Disclosure Statement by Applicant (Use several sheets if necessary)	Applicant Dr. Nathan C. Moskowitz	
(37 CFR §1.98(b))	Filing Date November 21, 2017	Group Art Unit

Foreign Patent Documents or Published Foreign Patent Applications

Examiner Initial	Desig. ID	Document Number	Publication Date	Country or Patent Office	Class	Subclass	Translation Yes	Translation No
	309.	2004093749	2004-11-04	WO			English Equiv. US 2007021 3820	
	310.	2006091503	2006-08-31	WO				
	311.	2727003	1996-05-24	FR				

Other Documents (include Author, Title, Date, and Place of Publication)

Examiner Initial	Desig. ID	Document
	312.	Vincent C. TRAYNELIS, "Prosthetics and Biologics: The Wave of the Future," CLINICAL NEUROSURGERY, Volume 50, Proceedings of the Congress of Neurological Surgeons, Philadelphia, PA 2002, Chapter 9, pages 207-219
	313.	E.K. WAI et al., "Disk Replacement Arthroplasties: Can The Success of Hip and Knee Replacements be Repeated in the Spine?," Seminars in Spine Surgery, Vol. 15, No. 4 (December) 2003, pp 473-482
	314.	Richard D. GUYER et al., "Intervertebral Disc Prostheses," SPINE JOURNAL, Volume 28, Number 15S, Supp. To 8/1/03, pages S15-S23
	315.	DIETER GROB et al.. "Clinical Experience With the Dynesys Semirigid Fixation System for the Lumbar Spine," SPINE, Vol. 30, No. 3, 2005, pp. 324-331
	316.	International Search Report (ISR) and Written Opinion of the International Searching Authority, 03 December 2007, International Application No. PCT/US 07/05005
	317.	International Search Report (ISR) and Written Opinion of the International Searching Authority, 21 May 2008, International Application No. PCT/US2007/021015
	318.	International Search Report (ISR) and Written Opinion of the International Searching Authority, 09 July 2008, International Application No. PCT/US2007021013

Examiner Signature	Date Considered
/PEDRO PHILOGENE/	01/19/2018

EXAMINER: Initials citation considered. Draw line through citation if not in conformance and not considered. Include copy of this form with next communication to applicant.

Substitute Disclosure Form

ALL REFERENCES CONSIDERED EXCEPT WHERE LINED THROUGH. /P.P/

EAST Search History

EAST Search History (Prior Art)

Ref #	Hits	Search Query	DBs	Default Operator	Plurals	Time Stamp
L1	2	(("8353913") or ("7942903")).PN.	USPAT; USOCR	OR	OFF	2018/01/19 09:23
L2	3	(("9301854") or ("9848993") or ("9867719")).PN.	USPAT; USOCR	OR	OFF	2018/01/19 09:29
L3	0	moskowitz near nathan.in. & expandable near interbody near device & wedge	US-PGPUB; USPAT; USOCR; FPRS; EPO; JPO; DERWENT; IBM_TDB	OR	ON	2018/01/19 10:16
L4	0	moskowitz near ahmnon.in. & expandable near interbody near device & wedge	US-PGPUB; USPAT; USOCR; FPRS; EPO; JPO; DERWENT; IBM_TDB	OR	ON	2018/01/19 10:17
L5	0	moskowitz near mosheh.in. & expandable near interbody near device & wedge	US-PGPUB; USPAT; USOCR; FPRS; EPO; JPO; DERWENT; IBM_TDB	OR	ON	2018/01/19 10:18
L6	0	alvarado near pablo.in. & expandable near interbody near device & wedge	US-PGPUB; USPAT; USOCR; FPRS; EPO; JPO; DERWENT; IBM_TDB	OR	ON	2018/01/19 10:18
L7	0	sugalski near eric.in. & expandable near interbody near device & wedge	US-PGPUB; USPAT; USOCR; FPRS; EPO; JPO; DERWENT; IBM_TDB	OR	ON	2018/01/19 10:19
L8	31	expandable near interbody near device & wedge	US-PGPUB; USPAT; USOCR; FPRS; EPO; JPO; DERWENT; IBM_TDB	OR	ON	2018/01/19 10:19
L9	135	expandable near spinal near implant & wedge	US-PGPUB; USPAT; USOCR; FPRS;	OR	ON	2018/01/19 10:39

			EPO; JPO; DERWENT; IBM_TDB			
L10	2	"20140249629"	US-PGPUB; USPAT	OR	OFF	2018/01/19 10:43
L11	2	10 AND ((A61B17/0642 OR A61B17/7064 OR A61B17/86 OR A61B17/8875 OR A61B2017/0256 OR A61B2017/922 OR A61F2002/2835 OR A61F2002/30261 OR A61F2002/30266 OR A61F2002/30281 OR A61F2002/30387 OR A61F2002/30448 OR A61F2002/30471 OR A61F2002/30497 OR A61F2002/30507 OR A61F2002/30525 OR A61F2002/30538 OR A61F2002/3055 OR A61F2002/30556 OR A61F2002/30579 OR A61F2002/30604 OR A61F2002/30772 OR A61F2002/30878 OR A61F2002/4475 OR A61F2002/448 OR A61F2002/4627 OR A61F2002/4681 OR A61F2002/4687 OR A61F2220/0025 OR A61F2220/005 OR A61F2230/0015 OR A61F2250/0007 OR A61F2/447 OR A61F2/4611).CPC. OR (1/1 OR 623/17.11-17.16 or 606/246-279).CCLS. OR (A61F2/44 OR A61F2/28 OR A61F2/30 OR A61F2/46 OR A61B17/02 OR A61B17/064 OR A61B17/70 OR A61B17/86 OR A61B17/88 OR A61B17/92).IPCR.)	US-PGPUB; USPAT	OR	OFF	2018/01/19 10:44
L12	124	9 AND ((A61B17/0642 OR A61B17/7064 OR A61B17/86 OR A61B17/8875 OR A61B2017/0256 OR A61B2017/922 OR A61F2002/2835 OR A61F2002/30261 OR A61F2002/30266 OR A61F2002/30281 OR A61F2002/30387 OR A61F2002/30448 OR A61F2002/30471 OR A61F2002/30497 OR A61F2002/30507 OR A61F2002/30525 OR A61F2002/30538 OR A61F2002/3055 OR A61F2002/30556 OR A61F2002/30579 OR A61F2002/30604 OR A61F2002/30772 OR A61F2002/30878 OR A61F2002/4475 OR A61F2002/448 OR A61F2002/4627 OR A61F2002/4681 OR A61F2002/4687 OR A61F2220/0025 OR A61F2220/005 OR A61F2230/0015 OR A61F2250/0007 OR A61F2/447 OR A61F2/4611).CPC. OR (1/1 OR 623/17.11-17.16 or 606/246-279).CCLS. OR (A61F2/44 OR A61F2/28 OR A61F2/30 OR A61F2/46 OR A61B17/02 OR A61B17/064 OR A61B17/70 OR A61B17/86 OR A61B17/88 OR A61B17/92).IPCR.)	US-PGPUB; USPAT	OR	OFF	2018/01/19 10:44
L13	97	("20040133280" | "20080114367" | "20080183204" | "20080281346" | "20090299478" | "20100082109" | "20110054621" | "20110172774" | "20120004732" | "20120035729" | "20120109319" | "20120150304" | "20120150305" | "20120158146" | "20120158147" | "20120158148" | "20130079882" | "20130144388" | "20130158664" | "20130190876" | "20140121774" | "20140180419" | "20140194992" | "20140236296" | "20140257486" | "20140257489" | "20140277139" | "20140324171" |	US-PGPUB; USPAT; USOCR	OR	OFF	2018/01/19 11:11

		"20150100128" | "20160166396" | "20160250034" | "20160324654" | "5390683" | "5522899" | "5693100" | "5782832" | "6126689" | "6174334" | "6332895" | "6454806" | "6491724" | "6641614" | "6719796" | "7070598" | "7087055" | "7547325" | "7763028" | "7824445" | "7850733" | "7875078" | "7909869" | "8062375" | "8105358" | "8105382" | "8123810" | "8133232" | "8187332" | "8216278" | "8317798" | "8382842" | "8394145" | "8398713" | "8403990" | "8435298" | "8491659" | "8518120" | "8523944" | "8556979" | "8568481" | "8628577" | "8628578" | "8632595" | "8636746" | "8663329" | "8679183" | "8685098" | "8709086" | "8777993" | "8778025" | "8795366" | "8888853" | "8888854" | "8894711" | "8894712" | "8926704" | "8940049" | "8986386" | "9034041" | "9039771" | "9060876" | "9119726" | "9119730" | "9216098" | "9289308" | "9320613" | "9421110" | "9486328").PN. OR ("9713536").URPN.				
L14	6	"20130158664"	US-PGPUB; USPAT	OR	OFF	2018/01/19 12:39

1/19/2018 1:03:55 PM

UNITED STATES PATENT AND TRADEMARK OFFICE

UNITED STATES DEPARTMENT OF COMMERCE
United States Patent and Trademark Office
Address: COMMISSIONER FOR PATENTS
P.O. Box 1450
Alexandria, Virginia 22313-1450
www.uspto.gov

BIB DATA SHEET

CONFIRMATION NO. 1007

SERIAL NUMBER	FILING or 371(c) DATE	CLASS	GROUP ART UNIT	ATTORNEY DOCKET NO.
15/820,232	11/21/2017 RULE	623	3733	45335-0020002

APPLICANTS
Nathan C. Moskowitz, Rockville, MD;

INVENTORS
Ahmnon D. Moskowitz, Rockville, MD;
Mosheh T. Moskowitz, Rockville, MD;
Pablo A. Valdivia Y. Alvarado, Cambridge, MA;
Eric Sugalski, Arlington, MA;
Nathan C. Moskowitz, Rockville, MD;

**** CONTINUING DATA ****************************
This application is a CON of 14/063,197 10/25/2013 PAT 9848993
which is a CIP of 13/210,150 08/15/2011 PAT 9867719
and is a CIP of 13/210,157 08/15/2011
and is a CIP of 13/210,162 08/15/2011
and is a CIP of 13/210,168 08/15/2011
and is a CIP of 13/741,361 01/14/2013 PAT 9301854
and said 13/210,150 08/15/2011
is a CON of 13/084,543 04/11/2011 PAT 8353913
which is a DIV of 11/842,855 08/21/2007 PAT 7942903
which is a CIP of 11/536,815 09/29/2006 PAT 7846188
which is a CIP of 11/208,644 08/23/2005 PAT 7704279
which claims benefit of 60/670,231 04/12/2005
and said 13/210,157 08/15/2011
is a CON of 13/084,543 04/11/2011 PAT 8353913
and said 13/210,162 08/15/2011
is a CON of 13/084,543 04/11/2011 PAT 8353913
and said 13/210,168 08/15/2011
is a CON of 13/084,543 04/11/2011 PAT 8353913
and said 13/741,361 01/14/2013
is a CON of 13/084,543 04/11/2011 PAT 8353913
and said 14/063,197 10/25/2013
claims benefit of 61/801,783 03/15/2013
and claims benefit of 61/718,707 10/25/2012

**** FOREIGN APPLICATIONS ****************************

**** IF REQUIRED, FOREIGN FILING LICENSE GRANTED **** ** SMALL ENTITY **
12/11/2017

Foreign Priority claimed	☐ Yes ☑ No		STATE OR COUNTRY	SHEETS DRAWINGS	TOTAL CLAIMS	INDEPENDENT CLAIMS
35 USC 119(a-d) conditions met	☐ Yes ☑ No	☐ Met after Allowance	MD	38	20	3
Verified and Acknowledged	/PEDRO PHILOGENE/ Examiner's Signature	Initials				

ADDRESS
FISH & RICHARDSON P.C. (TC)

Index of Claims	Application/Control No.	Applicant(s)/Patent Under Reexamination
	15820232	MOSKOWITZ ET AL.
	Examiner	**Art Unit**
	PEDRO PHILOGENE	3733

✓	Rejected	-	Cancelled	N	Non-Elected	A	Appeal
=	Allowed	÷	Restricted	I	Interference	O	Objected

☐ Claims renumbered in the same order as presented by applicant ☐ CPA ☐ T.D. ☐ R.1.47

CLAIM		DATE								
Final	Original	01/19/2018								
	1	-								
	2	✓								
	3	✓								
	4	✓								
	5	✓								
	6	✓								
	7	✓								
	8	✓								
	9	✓								
	10	✓								
	11	✓								
	12	✓								
	13	✓								
	14	✓								
	15	✓								
	16	✓								
	17	✓								
	18	✓								
	19	✓								
	20	✓								

Search Notes	Application/Control No.	Applicant(s)/Patent Under Reexamination
	15820232	MOSKOWITZ ET AL.
	Examiner	**Art Unit**
	PEDRO PHILOGENE	3733

CPC- SEARCHED

Symbol	Date	Examiner
A61F2/447,4611; A61B17/0642,706486,8875	1/19/2018	/P.P./
A61F2002/2835,30261,30266,30281,30387,30448,30471,30497,30507,30525,30538,3055,30556,30579		
A61F2002/30604,30772,30878,4475,448,4627,4681,4687,		
A61F2220/0025,005; A61F2230/0015; A61F2250/0007		

CPC COMBINATION SETS - SEARCHED

Symbol	Date	Examiner

US CLASSIFICATION SEARCHED

Class	Subclass	Date	Examiner
623	17.11-17.16	1/19/2018	/P.P./
606	246-179,96,99		

* See search history printout included with this form or the SEARCH NOTES box below to determine the scope of the search.

SEARCH NOTES

Search Notes	Date	Examiner
EAST search enclosed	1/19/2018	/P.P./

INTERFERENCE SEARCH

US Class/ CPC Symbol	US Subclass / CPC Group	Date	Examiner

	/PEDRO PHILOGENE/ Primary Examiner.Art Unit 3733

IN THE UNITED STATES PATENT AND TRADEMARK OFFICE

First Named Inventor	:	Ahmnon D. Moskowitz	Art Unit	:	3733
Serial No.	:	15/820,232	Examiner	:	Pedro Philogene
Filed	:	November 21, 2017	Conf. No.	:	1007
Title	:	ZERO-PROFILE EXPANDABLE INTERVERTEBRAL SPACER DEVICES FOR DISTRACTION AND SPINAL FUSION AND A UNIVERSAL TOOL FOR THEIR PLACEMENT AND EXPANSION			

Mail Stop Amendment
Commissioner for Patents
P.O. Box 1450
Alexandria, VA 22313-1450

REPLY TO ACTION OF JANUARY 26, 2018

Please consider the following reply.

Amendments to the Specification:

Please replace the paragraphs [0001] and [0002] with the following paragraphs:

[0001] This application is a Continuation Application of application Serial No. 14/063,197, filed on October 25, 2013, which is a Continuation-in-part Application of co-pending application Serial No. 13/210,150, filed August 15, 2011, and a Continuation-in-part Application of co-pending application Serial No. 13/210,157, filed August 15, 2011, and a Continuation-in-part Application of co-pending application Serial No. 13/210,162, filed August 15, 211, and a Continuation-in-part Application of co-pending application Serial No. 13/210,168, filed August 15, 2011, and a Continuation-in-part Application of application Serial No. 13/741,361, filed on January 14, 2013, now U.S. Patent No. 9,301,854 issued April 5, 2016.

[0002] Serial No. 13/210,150, filed August 15, 2011, is a Continuation of application Serial No. 13/084,543, filed April 11, 2011, now U.S. Patent No. 8,353,913 issued on January 15, 2013, which is a Divisional of application Serial No. 11/842,855, filed August 21, 2007, now U.S. Patent No. 7,942,903 issued May 17, 2011 and a Continuation of application Serial No. 13/108,982, filed May 16, 2011, now U.S. Patent No. 9,005,293 issued April 14, 2015, which is a Continuation of application Serial No. 11/842,855, filed August 21, 2007, now U.S. Patent No. 7,942,903 issued May 17, 2011, which is a Continuation-in-part of application Serial No. 11/536,815, filed September 29, 2006, now U.S. Patent No. 7,846,188 issued December 7, 2010, which is a Continuation-in-part of 11/208,644, filed August 23, 2005, now U.S. Patent No. 7,704,279 issued April 4, 2010, which claims priority under 35 U.S.C. § 119(e) of U.S. provisional application No. 60/670,231, filed on April 12, 2005; the entire contents of all the above identified patent applications are hereby incorporated by reference.

[0003] Serial No. 13/210,157, filed August 15, 2011, is a Continuation of application Serial No. 13/804,543, filed April 11, 2011, now U.S. Patent No. January 15, 2013. Serial No. 13/210,162, filed August 15, 211, is a Continuation of application Serial No. 13/084,543, filed April 11, 2011, now U.S. Patent No. 8,353,913 issued January 15, 2013. Serial No. 13/210,168 is a Continuation of application Serial No. 13/084,543, filed April 11, 2011, now U.S. Patent No. 8,353,913 issued January 15, 2013. Serial No. 13/741,361 is a Continuation of application Serial No. 13/084,543, filed April 11, 2011, now U.S. Patent No. 8,353,913 issued January 15, 2013.

[0004] Serial No. 14/063,197, filed on October 25, 2013, claims priority under U.S.C. § 119(e) of U.S. provisional application Nos. 61/801,783, filed March 15, 2013 and 61/718,707, filed October 25, 2012.

List of claims (replacing prior versions).

1. (Cancelled)

2. (Previously Presented) An expandable interbody device comprising:

a first housing extending from a first end to a second end, wherein the first housing has first and second end portions positioned at the first and second ends, respectively, and has first and second side portions extending between the first and second end portions, wherein the first housing has a first vertebral body engagement surface and has a first interior surface positioned on an opposite side of the first housing than the first vertebral body engagement surface;

a second housing extending from a third end to a fourth end, wherein the second housing has third and fourth end portions positioned at the third and fourth ends, respectively, and has third and fourth side portions extending between the third and fourth end portions, wherein the second housing has a second vertebral body engagement surface and has a second interior surface positioned on an opposite side of the second housing than the second vertebral body engagement surface, wherein the first housing is aligned with the second housing such that the first end of the first housing is axially aligned with the third end of the second housing and the second end of the first housing is axially aligned with the fourth end of the second housing, wherein the first end portion of the first housing is hingedly connected to the third end portion of the second housing such that the first housing can pivot with respect to the second housing so as to move the second end portion of the first housing away from the fourth end portion of the second housing, wherein the second housing defines a slot in the fourth end portion between the third and fourth side portions that is sized to receive the second end portion of the first housing such that the second end of the first housing and the fourth end of the second housing are axially aligned;

a wedge extending from a fifth end to a sixth end and having an angled wedge surface extending along at least a portion of a distance between the fifth end and the sixth end, wherein the wedge is positioned between the first housing and the second housing with the angled wedge surface facing the first interior surface of the first housing, wherein the first interior surface of the first housing has an angled housing surface shaped to engage the angled wedge surface of the wedge, wherein a distance from the fifth end to the sixth end of the wedge is less than a distance from the first end to the second end of the first housing and is less than a distance from the third end to the fourth end of the second housing, wherein the wedge is configured to slide within a spaced defined by the first and second housings in a direction toward the second and fourth ends of the first and second housings from a first wedge position that allows the first and second housings to pivot to a housing position that is substantially closed to a second wedge position whereby the angled wedge surface presses against the first interior surface of the first housing to hingedly open the first housing with respect to the second housing whereby the wedge remains axially confined within the space defined by the first and second housings in the first and second wedge positions; and

a rotation screw operably connected to the wedge and to the second housing, wherein rotation of the rotation screw moves the wedge in an axially translating direction with respect to the first housing and the second housing within the space defined by the first and second housings from the first wedge position to the second wedge position.

3. (Previously Presented) The device of claim 2, wherein the first housing defines a first bone material receiving area between the first and second end portions and the first and second side portions, and wherein the second housing defines a second bone material receiving area between the third and fourth end portions and the third and fourth side portions.

4. (Previously Presented) The device of claim 2, and further comprising means for retaining the rotation screw.

5. (Previously Presented) The device of claim 2, and further comprising means for mating with prongs of a tool.

6. (Previously Presented) The device of claim 2, wherein the wedge comprises a threaded hole that engages with a threaded surface of the rotation screw.

7. (Previously Presented) The device of claim 2, and further comprising first and second retaining rings connected to the rotation screw so as to retain the rotation screw in place when the rotation screw rotates.

8. (Previously Presented) The device of claim 2, wherein the third and fourth side portions define first and second indentations configured to be grabbed by an insertion tool.

9. (Previously Presented) A system comprising the device of claim 8, wherein the system further comprises:

means for gripping and inserting the device.

10. (Previously Presented) The system of claim 9, and further comprising:

means for turning the rotation screw.

11. (Previously Presented) The device of claim 2, and further comprising means for attaching the first housing to the second housing.

12. (Previously Presented) The device of claim 2, wherein the first housing has a thickness that varies between the first end and the second end such that the first interior surface has at least one curved portion and at least one straight portion.

13. (Previously Presented) The device of claim 2, wherein the wedge comprises substantially straight and parallel opposing side surfaces.

14. (Previously Presented) A method of operating the device of claim 2, the method comprising:

inserting the device in a target surgical location between two vertebrae; and

turning the rotation screw to drive the wedge to pivot the first housing away from the second housing while the device is positioned between the vertebrae.

15. (Currently Amended) An expandable interbody device comprising:

a first housing extending from a first end to a second end, wherein the first housing has first and second end portions positioned at the first and second ends, respectively, and has first and second side portions extending between the first and second end portions, wherein the first housing has a first vertebral body engagement surface that is substantially convex and has a first interior surface positioned on an opposite side of the first housing than the first vertebral body engagement surface,[[,]] wherein the first housing defines at least one first bone material receiving area between the first and second end portions and the first and second side portions;

a second housing extending from a third end to a fourth end, wherein the second housing has third and fourth end portions positioned at the third and fourth ends, respectively, and has third and fourth side portions extending between the third and fourth end portions, wherein the second housing has a second vertebral body engagement surface that is substantially convex and has a second interior surface positioned on an opposite side of the second housing than the second vertebral body engagement surface, wherein the second housing defines at least one second bone material receiving area between the third and fourth end portions and the third and fourth side portions, wherein the first housing is aligned with the second housing such that the first end of the first housing is axially aligned with the third end of the second housing and the second end of the first housing is axially aligned with the fourth end of the second housing, wherein the first end portion of the first housing and the third end portion of the second housing are hingedly interconnected such that the first housing can pivot with respect to the second

housing so as to move the second end portion of the first housing away from the fourth end portion of the second housing, wherein at least part of the first housing is positioned between the third and fourth side portions of the second housing;

a wedge extending from a fifth end to a sixth end and having an angled wedge surface extending along at least a portion of a distance between the fifth end and the sixth end, wherein the wedge is positioned between the first housing and the second housing with the angled wedge surface facing the first interior surface of the first housing, wherein the first interior surface of the first housing has an angled housing surface shaped to engage the angled wedge surface of the wedge, wherein a distance from the fifth end to the sixth end of the wedge is less than a distance from the first end to the second end of the first housing and is less than a distance from the third end to the fourth end of the second housing, wherein the wedge is configured to slide within a spaced defined by the first and second housings in a direction toward the second and fourth ends of the first and second housings from a first wedge position that allows the first and second housings to pivot to a housing position that is substantially closed to a second wedge position whereby the angled wedge surface presses against the first interior surface of the first housing to hingedly open the first housing with respect to the second housing whereby the wedge remains axially confined within the space defined by the first and second housings in the first and second wedge positions; and

a rotation screw operably connected to the wedge and to the second housing, wherein rotation of the rotation screw moves the wedge in an axially translating direction with respect to the first housing and the second housing within the space defined by the first and second housings from the first wedge position to the second wedge position.

16. (Previously Presented) The device of claim 15, wherein the first end portion of the first housing and the third end portion of the second housing are hingedly interconnected via at least two pins.

17. (Previously Presented) The device of claim 15, wherein the first housing has a thickness that varies between the first end and the second end such that the first interior surface has at least one curved portion and at least one straight portion.

18. (Previously Presented) The device of claim 15, and further comprising means for attaching the first housing to the second housing.

19. (Previously Presented) A method of operating the device of claim 15, the method comprising:

inserting the device in a target surgical location between two vertebrae; and

turning the rotation screw to drive the wedge to pivot the first housing away from the second housing while the device is positioned between the vertebrae.

20. (Previously Presented) An expandable interbody device comprising:

a first housing extending from a first end to a second end, wherein the first housing has first and second end portions positioned at the first and second ends, respectively, and has first and second side portions extending between the first and second end portions, wherein the first housing has a first vertebral body engagement surface and has a first interior surface positioned on an opposite side of the first housing than the first vertebral body engagement surface, wherein the first housing defines a first bone material receiving area between the first and second end portions and the first and second side portions;

a second housing extending from a third end to a fourth end, wherein the second housing has third and fourth end portions positioned at the third and fourth ends, respectively, and has third and fourth side portions extending between the third and fourth end portions, wherein the second housing has a second vertebral body engagement surface and has a second interior surface positioned on an opposite side of the second housing than the second vertebral body engagement surface, wherein the second housing defines a second bone material receiving area between the third and fourth end portions and the third and fourth side portions,

wherein the third and fourth side portions define first and second indentations configured to be grabbed by an insertion tool, wherein the first housing is aligned with the second housing such that the first end of the first housing is axially aligned with the third end of the second housing and the second end of the first housing is axially aligned with the fourth end of the second housing, wherein the first end portion of the first housing is hingedly connected to the third end portion of the second housing such that the first housing can pivot with respect to the second housing so as to move the second end portion of the first housing away from the fourth end portion of the second housing, wherein the second housing defines a slot in the fourth end portion between the third and fourth side portions that is sized to receive the second end portion of the first housing such that the second end of the first housing and the fourth end of the second housing are axially aligned;

a wedge extending from a fifth end to a sixth end with an angled wedge surface extending along at least a portion of a distance between the fifth end and the sixth end and with first and second substantially straight and parallel opposing side surfaces, wherein the wedge is positioned between the first housing and the second housing with the angled wedge surface facing the first interior surface of the first housing, wherein the first interior surface of the first housing has an angled housing surface shaped to engage the angled wedge surface of the wedge, wherein a distance from the fifth end to the sixth end of the wedge is less than a distance from the first end to the second end of the first housing and is less than a distance from the third end to the fourth end of the second housing, wherein the wedge is configured to slide within a spaced defined by the first and second housings in a direction toward the second and fourth ends of the first and second housings from a first wedge position that allows the first and second housings to pivot to a housing position that is substantially closed to a second wedge position whereby the angled wedge surface presses against the first interior surface of the first housing to hingedly open the first housing with respect to the second housing whereby the wedge

remains axially confined within the space defined by the first and second housings in the first and second wedge positions; and

a rotation screw operably connected to the wedge and to the second housing, wherein rotation of the rotation screw moves the wedge in an axially translating direction with respect to the first housing and the second housing within the space defined by the first and second housings from the first wedge position to the second wedge position.

21. (Previously Presented) The device of claim 20, and further comprising means for attaching the first housing to the second housing.

REMARKS

Claims 2-20 are pending, with claims 2, 15, and 20 being independent. Claim 15 is amended to correct a typographical error.

Examiner Interview

On 2/6/2018, an Examiner Interview was conducted between Examiner Pedro Philogene for the USPTO and Stuart A. Nelson for the Applicant. During the interview, the parties discussed differences between claim 2 and U.S. Pat. No. 9,445,919 to Palmatier et al. ("Palmatier"). It was agreed that claim 2 of the present application required features not taught by Palmatier, and consequently, was not anticipated by Palmatier.

Claim Rejections – 35 USC § 102

Claim(s) 2-20 is/are rejected under pre-AIA 35 U.S.C. 102(e) as being anticipated by U.S. Patent No. 9,445,919 (Palmatier).

As agreed during the Examiner Interview regarding claim 2, Palmatier does not teach an expandable interbody device with first and second housings where "the second housing defines a slot in the fourth end portion between the third and fourth side portions that is sized to receive the second end portion of the first housing such that the second end of the first housing and the fourth end of the second housing are axially aligned" as claimed. Palmatier also fails to teach a wedge "whereby the wedge remains axially confined within the space defined by the first and second housings in the first and second wedge positions" as claimed. Accordingly, claim 2 and all claims depending therefrom are patentable over the cited reference for at least these reasons.

Claim 15 also requires an expandable interbody device with first and second housings and further requires that "the first housing is aligned with the second housing such that the first end of the first housing is axially aligned with the third end of the second housing and the second end of the first housing is axially aligned with the fourth end of the second housing" and "at least part of the first housing is positioned between the third and fourth side portions of the second housing." Claim 15 also requires that "the wedge remains axially confined within the space defined by the first and second housings in the first and second wedge positions." While the

language of claim 15 differs from claim 2 in some respects, Palmatier fails to teach these limitations of claim 15 for the same or similar reasons as discussed during the Examiner Interview and agreed with respect to claim 2. Accordingly, claim 15 and all claims depending therefrom are patentable over Palmatier for at least these reasons.

Claim 20 also requires an expandable interbody device with first and second housings and further requires that "the second housing defines a slot in the fourth end portion between the third and fourth side portions that is sized to receive the second end portion of the first housing such that the second end of the first housing and the fourth end of the second housing are axially aligned." Claim 20 also requires that "the wedge remains axially confined within the space defined by the first and second housings in the first and second wedge positions." While the language of claim 20 differs from claim 2 in some respects, Palmatier fails to teach these limitations of claim 20 for the same or similar reasons as discussed during the Examiner Interview and agreed with respect to claim 2. Accordingly, claim 20 and all claims depending therefrom are patentable over Palmatier for at least these reasons.

Request for Reconsideration

The Applicant respectfully requests prompt consideration and a Notice of Allowance. In the event that no Notice of Allowance will be provided in the next communication, Applicant requests that the Examiner telephone the undersigned attorney (612-337-2538) prior to the next communication so that prosecution on the merits may be expedited. It is believed that all of the pending claims have been addressed. However, the absence of a reply to a specific rejection, issue or comment does not signify agreement with or concession of that rejection, issue or comment. In addition, because the arguments made above may not be exhaustive, there may be reasons for patentability of any or all pending claims (or other claims) that have not been expressed. Nothing in this paper should be construed as an intent to concede any issue with regard to any claim, except as specifically stated in this paper, and the amendments herein do not signify concession of unpatentability of any claims prior to this amendment. Applicant hereby specifically reserves the right to prosecute the previously presented subject matter in a continuing application. Also, Applicant expressly reserves the right to prosecute claims of different or broader scope in a continuing application. The Patent Office should infer no (i)

adoption of a position with respect to patentability, (ii) change in the Applicant's position with respect to any claim or subject matter of the invention, or (iii) acquiescence in any way to any position taken by the Office Action, based on the amendments made herein.

No fees are believed to be due. Apply any fees and other necessary charges or credits to Deposit Account 06-1050, referencing the above attorney docket number.

Respectfully submitted,

Date: 2/6/2018

/Stuart A. Nelson/

Stuart A. Nelson
Reg. No. 63,947

Customer Number 26191
Fish & Richardson P.C.
Telephone: (612) 337-2538
Facsimile: (877) 769-7945

61626434.doc

IN THE UNITED STATES PATENT AND TRADEMARK OFFICE

First Named Inventor	:	Ahmnon D. Moskowitz	Art Unit	:	Unknown
Serial No.	:	15/820,232	Examiner	:	Unknown
Filed	:	November 21, 2017	Conf. No.	:	1007
Title	:	ZERO-PROFILE EXPANDABLE INTERVERTEBRAL SPACER DEVICES FOR DISTRACTION AND SPINAL FUSION AND A UNIVERSAL TOOL FOR THEIR PLACEMENT AND EXPANSION			

Commissioner for Patents
P.O. Box 1450
Alexandria, VA 22313-1450

REQUEST FOR CORRECTED OFFICIAL FILING RECEIPT

Please correct the Filing Receipt for the above-referenced application to include the priority application 13/108,982, filed May 16, 2011.

Please supply a corrected Filing Receipt to the undersigned with respect to this application.

No fee is believed to be due. If, however, there are any necessary charges or credits, please apply them to Deposit Account No. 06-1050, referencing the above attorney docket number.

Respectfully submitted,

Date: 2/6/2018

/Stuart A. Nelson/
Stuart A. Nelson
Reg. No. 63,947

Customer Number 26191
Fish & Richardson P.C.
Telephone: (612) 337-2538
Facsimile: (877) 769-7945

61610085.doc

Application Data Sheet 37 CFR 1.76	Attorney Docket Number	45335-0020002
	Application Number	15/820,232
Title of Invention	ZERO-PROFILE EXPANDABLE INTERVERTEBRAL SPACER DEVICES FOR DISTRACTION AND SPINAL FUSION AND A UNIVERSAL TOOL FOR THEIR PLACEMENT AND EXPANSION	

The application data sheet is part of the provisional or nonprovisional application for which it is being submitted. The following form contains the bibliographic data arranged in a format specified by the United States Patent and Trademark Office as outlined in 37 CFR 1.76.

Domestic Benefit/National Stage Information:

This section allows for the applicant to either claim benefit under 35 U.S.C. 119(e), 120, 121, or 365(c) or indicate National Stage entry from a PCT application. Providing this information in the application data sheet constitutes the specific reference required by 35 U.S.C. 119(e) or 120, and 37 CFR 1.78.
When referring to the current application, please leave the "Application Number" field blank.

Prior Application Status	Pending		
Application Number	Continuity Type	Prior Application Number	Filing Date (**MM/DD/YYYY**)
	Continuation of	14063197	10/25/2013

Prior Application Status	Pending		
Application Number	Continuity Type	Prior Application Number	Filing Date (**MM/DD/YYYY**)
14063197	Continuation in Part of	13210150	08/15/2011

Prior Application Status	Pending		
Application Number	Continuity Type	Prior Application Number	Filing Date (**MM/DD/YYYY**)
14063197	Continuation in Part of	13210157	08/15/2011

Prior Application Status	Pending		
Application Number	Continuity Type	Prior Application Number	Filing Date (**MM/DD/YYYY**)
14063197	Continuation in Part of	13210162	08/15/2011

Prior Application Status	Pending		
Application Number	Continuity Type	Prior Application Number	Filing Date (**MM/DD/YYYY**)
14063197	Continuation in Part of	13210168	08/15/2011

Prior Application Status	Patented				
Application Number	Continuity Type	Prior Application Number	Filing Date (**MM/DD/YYYY**)	Patent Number	Issue Date (**MM/DD/YYYY**)
14063197	Continuation in Part of	13741361	01/14/2013	9301854	04/05/2016

Prior Application Status	Patented				
Application Number	Continuity Type	Prior Application Number	Filing Date (**MM/DD/YYYY**)	Patent Number	Issue Date (**MM/DD/YYYY**)
13210150	Continuation of	13084543	04/11/2011	8353913	01/15/2013

Application Data Sheet 37 CFR 1.76	Attorney Docket Number	45335-0020002
	Application Number	15/820,232
Title of Invention	ZERO-PROFILE EXPANDABLE INTERVERTEBRAL SPACER DEVICES FOR DISTRACTION AND SPINAL FUSION AND A UNIVERSAL TOOL FOR THEIR PLACEMENT AND EXPANSION	

Prior Application Status	Patented				
Application Number	Continuity Type	Prior Application Number	Filing Date (**MM/DD/YYYY**)	Patent Number	Issue Date (**MM/DD/YYYY**)
13084543	Division of	11842855	08/21/2007	7942903	05/17/2011

Prior Application Status	Patented				
Application Number	Continuity Type	Prior Application Number	Filing Date (**MM/DD/YYYY**)	Patent Number	Issue Date (**MM/DD/YYYY**)
13084543	Continuation of	13108982	05/16/2011	9005293	04/14/2015

Prior Application Status	Patented				
Application Number	Continuity Type	Prior Application Number	Filing Date (**MM/DD/YYYY**)	Patent Number	Issue Date (**MM/DD/YYYY**)
13108982	Continuation of	11842855	08/21/2007	7942903	05/17/2011

Prior Application Status	Patented				
Application Number	Continuity Type	Prior Application Number	Filing Date (**MM/DD/YYYY**)	Patent Number	Issue Date (**MM/DD/YYYY**)
11842855	Continuation in Part of	11536815	09/29/2006	7846188	12/07/2010

Prior Application Status	Patented				
Application Number	Continuity Type	Prior Application Number	Filing Date (**MM/DD/YYYY**)	Patent Number	Issue Date (**MM/DD/YYYY**)
11536815	Continuation in Part of	11208644	08/23/2005	7704279	04/27/2010

Prior Application Status	Expired		
Application Number	Continuity Type	Prior Application Number	Filing Date (**MM/DD/YYYY**)
11208644	Claims benefit of provisional	60670231	04/12/2005

Prior Application Status	Patented				
Application Number	Continuity Type	Prior Application	Filing Date (**MM/DD/YYYY**)	Patent Number	Issue Date (**MM/DD/YYYY**)

		Number			
13210157	Continuation of	13084543	04/11/2011	8353913	2013-01-15
Prior Application Status	Patented				
Application Number	Continuity Type	Prior Application Number	Filing Date (**MM/DD/YYYY**)	Patent Number	Issue Date (**MM/DD/YYYY**)
13210162	Continuation of	13084543	04/11/2011	8353913	2013-01-15
Prior Application Status	Patented				
Application Number	Continuity Type	Prior Application Number	Filing Date (**MM/DD/YYYY**)	Patent Number	Issue Date (**MM/DD/YYYY**)
13210168	Continuation of	13084543	04/11/2011	8353913	2013-01-15
Prior Application Status	Patented				
Application Number	Continuity Type	Prior Application Number	Filing Date (**MM/DD/YYYY**)	Patent Number	Issue Date (**MM/DD/YYYY**)
13741361	Continuation of	13084543	04/11/2011	8353913	2013-01-15
Prior Application Status	Expired				
Application Number	Continuity Type	Prior Application Number	Filing Date (**MM/DD/YYYY**)		
14063197	Claims benefit of provisional	61801783	03/15/2013		
Prior Application Status	Expired				
Application Number	Continuity Type	Prior Application Number	Filing Date (**MM/DD/YYYY**)		
		61718707	10/25/2012		

Application Data Sheet 37 CFR 1.76	Attorney Docket Number	45335-0020002
	Application Number	15/820,232
Title of Invention	ZERO-PROFILE EXPANDABLE INTERVERTEBRAL SPACER DEVICES FOR DISTRACTION AND SPINAL FUSION AND A UNIVERSAL TOOL FOR THEIR PLACEMENT AND EXPANSION	

14063197	Claims benefit of provisional		

Signature:

A signature of the applicant or representative is required in accordance with 37 CFR 1.33 and 10.18. Please see 37 CFR 1.4(d) for the form of the signature.					
Signature	/Stuart A. Nelson/			Date (**MM/DD/YYYY**)	2/6/2018
First Name	Stuart	Last Name	Nelson	Registration Number	63,947

61626404.doc

Electronic Acknowledgement Receipt

EFS ID:	31713813
Application Number:	15820232
International Application Number:	
Confirmation Number:	1007
Title of Invention:	ZERO-PROFILE EXPANDABLE INTERVERTEBRAL SPACER DEVICES FOR DISTRACTION AND SPINAL FUSION AND A UNIVERSAL TOOL FOR THEIR PLACEMENT AND EXPANSION
First Named Inventor/Applicant Name:	Ahmnon D. Moskowitz
Customer Number:	26191
Filer:	Stuart A. Nelson/Abby Remer
Filer Authorized By:	Stuart A. Nelson
Attorney Docket Number:	45335-0020002
Receipt Date:	06-FEB-2018
Filing Date:	21-NOV-2017
Time Stamp:	14:14:18
Application Type:	Utility under 35 USC 111(a)

Payment information:

Submitted with Payment	no

File Listing:

Document Number	Document Description	File Name	File Size(Bytes)/ Message Digest	Multi Part /.zip	Pages (if appl.)
1		Response.pdf	106641 d9f4fe945e6e2ffdc41252125e2f188646960 1d1	yes	14

	Multipart Description/PDF files in .zip description		
	Document Description	**Start**	**End**
	Amendment/Req. Reconsideration-After Non-Final Reject	1	1
	Specification	2	3
	Claims	4	11
	Applicant Arguments/Remarks Made in an Amendment	12	14

Warnings:					
Information:					
2	Request for Corrected Filing Receipt	Request.pdf	51215 8bb29056931d02b05f8e3c825b2f46cdbe10f5b5	no	1
Warnings:					
Information:					
3	Application Data Sheet	SuppADS.pdf	88720 eb251bfee74053d00c82af53940da55fff9370e0	no	4
Warnings:					
Information:					
This is not an USPTO supplied ADS fillable form					
		Total Files Size (in bytes):	246576		

This Acknowledgement Receipt evidences receipt on the noted date by the USPTO of the indicated documents, characterized by the applicant, and including page counts, where applicable. It serves as evidence of receipt similar to a Post Card, as described in MPEP 503.

<u>New Applications Under 35 U.S.C. 111</u>
If a new application is being filed and the application includes the necessary components for a filing date (see 37 CFR 1.53(b)-(d) and MPEP 506), a Filing Receipt (37 CFR 1.54) will be issued in due course and the date shown on this Acknowledgement Receipt will establish the filing date of the application.
<u>National Stage of an International Application under 35 U.S.C. 371</u>
If a timely submission to enter the national stage of an international application is compliant with the conditions of 35 U.S.C. 371 and other applicable requirements a Form PCT/DO/EO/903 indicating acceptance of the application as a national stage submission under 35 U.S.C. 371 will be issued in addition to the Filing Receipt, in due course.
<u>New International Application Filed with the USPTO as a Receiving Office</u>
If a new international application is being filed and the international application includes the necessary components for an international filing date (see PCT Article 11 and MPEP 1810), a Notification of the International Application Number and of the International Filing Date (Form PCT/RO/105) will be issued in due course, subject to prescriptions concerning national security, and the date shown on this Acknowledgement Receipt will establish the international filing date of the application.

PTO/SB/06 (09-11)
Approved for use through 1/31/2014. OMB 0651-0032
U.S. Patent and Trademark Office; U.S. DEPARTMENT OF COMMERCE
Under the Paperwork Reduction Act of 1995, no persons are required to respond to a collection of information unless it displays a valid OMB control number.

PATENT APPLICATION FEE DETERMINATION RECORD Substitute for Form PTO-875	Application or Docket Number 15/820,232	Filing Date 11/21/2017	☐ To be Mailed

ENTITY: ☐ LARGE ☒ SMALL ☐ MICRO

APPLICATION AS FILED – PART I

FOR	(Column 1) NUMBER FILED	(Column 2) NUMBER EXTRA	RATE ($)	FEE ($)
☐ BASIC FEE (37 CFR 1.16(a), (b), or (c))	N/A	N/A	N/A	
☐ SEARCH FEE (37 CFR 1.16(k), (i), or (m))	N/A	N/A	N/A	
☐ EXAMINATION FEE (37 CFR 1.16(o), (p), or (q))	N/A	N/A	N/A	
TOTAL CLAIMS (37 CFR 1.16(i))	minus 20 =	*	x $ =	
INDEPENDENT CLAIMS (37 CFR 1.16(h))	minus 3 =	*	x $ =	
☐ APPLICATION SIZE FEE (37 CFR 1.16(s))	If the specification and drawings exceed 100 sheets of paper, the application size fee due is $310 ($155 for small entity) for each additional 50 sheets or fraction thereof. See 35 U.S.C. 41(a)(1)(G) and 37 CFR 1.16(s).			
☐ MULTIPLE DEPENDENT CLAIM PRESENT (37 CFR 1.16(j))				
* If the difference in column 1 is less than zero, enter "0" in column 2.			TOTAL	

APPLICATION AS AMENDED – PART II

AMENDMENT	02/06/2018	(Column 1) CLAIMS REMAINING AFTER AMENDMENT		(Column 2) HIGHEST NUMBER PREVIOUSLY PAID FOR	(Column 3) PRESENT EXTRA	RATE ($)	ADDITIONAL FEE ($)
	Total (37 CFR 1.16(i))	* 20	Minus	** 20	= 0	x $50 =	0
	Independent (37 CFR 1.16(h))	* 3	Minus	***3	= 0	x $230 =	0
	☐ Application Size Fee (37 CFR 1.16(s))						
	☐ FIRST PRESENTATION OF MULTIPLE DEPENDENT CLAIM (37 CFR 1.16(j))						
						TOTAL ADD'L FEE	**0**

AMENDMENT		(Column 1) CLAIMS REMAINING AFTER AMENDMENT		(Column 2) HIGHEST NUMBER PREVIOUSLY PAID FOR	(Column 3) PRESENT EXTRA	RATE ($)	ADDITIONAL FEE ($)
	Total (37 CFR 1.16(i))	*	Minus	**	=	x $ =	
	Independent (37 CFR 1.16(h))	*	Minus	***	=	x $ =	
	☐ Application Size Fee (37 CFR 1.16(s))						
	☐ FIRST PRESENTATION OF MULTIPLE DEPENDENT CLAIM (37 CFR 1.16(j))						
						TOTAL ADD'L FEE	

* If the entry in column 1 is less than the entry in column 2, write "0" in column 3.
** If the "Highest Number Previously Paid For" IN THIS SPACE is less than 20, enter "20".
*** If the "Highest Number Previously Paid For" IN THIS SPACE is less than 3, enter "3".
The "Highest Number Previously Paid For" (Total or Independent) is the highest number found in the appropriate box in column 1.

LIE
DENISE T. LILES

This collection of information is required by 37 CFR 1.16. The information is required to obtain or retain a benefit by the public which is to file (and by the USPTO to process) an application. Confidentiality is governed by 35 U.S.C. 122 and 37 CFR 1.14. This collection is estimated to take 12 minutes to complete, including gathering, preparing, and submitting the completed application form to the USPTO. Time will vary depending upon the individual case. Any comments on the amount of time you require to complete this form and/or suggestions for reducing this burden, should be sent to the Chief Information Officer, U.S. Patent and Trademark Office, U.S. Department of Commerce, P.O. Box 1450, Alexandria, VA 22313-1450. DO NOT SEND FEES OR COMPLETED FORMS TO THIS ADDRESS. **SEND TO: Commissioner for Patents, P.O. Box 1450, Alexandria, VA 22313-1450.**
If you need assistance in completing the form, call 1-800-PTO-9199 and select option 2.

UNITED STATES PATENT AND TRADEMARK OFFICE

UNITED STATES DEPARTMENT OF COMMERCE
United States Patent and Trademark Office
Address: COMMISSIONER FOR PATENTS
P.O. Box 1450
Alexandria, Virginia 22313-1450
www.uspto.gov

APPLICATION NUMBER	FILING OR 371(C) DATE	FIRST NAMED APPLICANT	ATTY. DOCKET NO./TITLE
15/820,232	11/21/2017	Ahmnon D. Moskowitz	45335-0020002

CONFIRMATION NO. 1007

IMPROPER CFR REQUEST

26191
FISH & RICHARDSON P.C. (TC)
PO BOX 1022
MINNEAPOLIS, MN 55440-1022

OC000000097268873

Date Mailed: 02/08/2018

RESPONSE TO REQUEST FOR CORRECTED FILING RECEIPT

Continuity, Priority Claims, Petitions, and Non-Publication Requests

In response to your request for a corrected Filing Receipt, the Office is unable to comply with your request because:

- A claim for priority cannot be made based on an application filed after the application making the claim.

Power of Attorney, Claims, Fees, System Limitations, and Miscellaneous

In response to your request for a corrected Filing Receipt, the Office is unable to comply with your request because:

- An Application Data Sheet is needed to make this change.

Questions about the contents of this notice and the requirements it sets forth should be directed to the Office of Data Management, Application Assistance Unit, at **(571) 272-4000** or **(571) 272-4200** or **1-888-786-0101**.

/ctuazon/

UNITED STATES PATENT AND TRADEMARK OFFICE

UNITED STATES DEPARTMENT OF COMMERCE
United States Patent and Trademark Office
Address: COMMISSIONER FOR PATENTS
P.O. Box 1450
Alexandria, Virginia 22313-1450
www.uspto.gov

APPLICATION NO.	FILING DATE	FIRST NAMED INVENTOR	ATTORNEY DOCKET NO.	CONFIRMATION NO.
15/820,232	11/21/2017	Ahmnon D. Moskowitz	45335-0020002	1007

26191 7590 02/12/2018
FISH & RICHARDSON P.C. (TC)
PO BOX 1022
MINNEAPOLIS, MN 55440-1022

EXAMINER
PHILOGENE, PEDRO

ART UNIT	PAPER NUMBER
3733	

NOTIFICATION DATE	DELIVERY MODE
02/12/2018	ELECTRONIC

Please find below and/or attached an Office communication concerning this application or proceeding.

The time period for reply, if any, is set in the attached communication.

Notice of the Office communication was sent electronically on above-indicated "Notification Date" to the following e-mail address(es):

PATDOCTC@fr.com

PTOL-90A (Rev. 04/07)

Applicant-Initiated Interview Summary	Application No.	Applicant(s)	
	15/820,232	MOSKOWITZ ET AL.	
	Examiner	Art Unit	
	PEDRO PHILOGENE	3733	

All participants (applicant, applicant's representative, PTO personnel):

(1) *PEDRO PHILOGENE*. (3)_____.

(2) *Stuart Nelson*. (4)_____.

Date of Interview: *06 February 2018*.

Type: ☒ Telephonic ☐ Video Conference
☐ Personal [copy given to: ☐ applicant ☐ applicant's representative]

Exhibit shown or demonstration conducted: ☐ Yes ☒ No.
If Yes, brief description: _____.

Issues Discussed ☐101 ☐112 ☒102 ☐103 ☐Others
(For each of the checked box(es) above, please describe below the issue and detailed description of the discussion)

Claim(s) discussed: *2*.

Identification of prior art discussed: *Palmatier et al. (9,445,919)*.

Substance of Interview
(For each issue discussed, provide a detailed description and indicate if agreement was reached. Some topics may include: identification or clarification of a reference or a portion thereof, claim interpretation, proposed amendments, arguments of any applied references etc...)

Applicant's argument seems to ovecome the rejection in the last office action. Applicant stated Palmatier fails to teach wherein the second housing defines a slot in the fourth end portion between the third and fourth side portions that is sized to receive the second end portion of the first housing such that the second end of the first housing and the fourth end of the second housing are axially aligned. the examiner agrees. Applicant will send in the formal amendment and the examinr will conduct an update search. As to allowability, no agreement was reached.

Applicant recordation instructions: The formal written reply to the last Office action must include the substance of the interview. (See MPEP section 713.04). If a reply to the last Office action has already been filed, applicant is given a non-extendable period of the longer of one month or thirty days from this interview date, or the mailing date of this interview summary form, whichever is later, to file a statement of the substance of the interview

Examiner recordation instructions: Examiners must summarize the substance of any interview of record. A complete and proper recordation of the substance of an interview should include the items listed in MPEP 713.04 for complete and proper recordation including the identification of the general thrust of each argument or issue discussed, a general indication of any other pertinent matters discussed regarding patentability and the general results or outcome of the interview, to include an indication as to whether or not agreement was reached on the issues raised.

☐ Attachment

/PEDRO PHILOGENE/
Primary Examiner, Art Unit 3733

Summary of Record of Interview Requirements

Manual of Patent Examining Procedure (MPEP), Section 713.04, Substance of Interview Must be Made of Record
A complete written statement as to the substance of any face-to-face, video conference, or telephone interview with regard to an application must be made of record in the application whether or not an agreement with the examiner was reached at the interview.

Title 37 Code of Federal Regulations (CFR) § 1.133 Interviews
Paragraph (b)

In every instance where reconsideration is requested in view of an interview with an examiner, a complete written statement of the reasons presented at the interview as warranting favorable action must be filed by the applicant. An interview does not remove the necessity for reply to Office action as specified in §§ 1.111, 1.135. (35 U.S.C. 132)

37 CFR §1.2 Business to be transacted in writing.
All business with the Patent or Trademark Office should be transacted in writing. The personal attendance of applicants or their attorneys or agents at the Patent and Trademark Office is unnecessary. The action of the Patent and Trademark Office will be based exclusively on the written record in the Office. No attention will be paid to any alleged oral promise, stipulation, or understanding in relation to which there is disagreement or doubt.

The action of the Patent and Trademark Office cannot be based exclusively on the written record in the Office if that record is itself incomplete through the failure to record the substance of interviews.

It is the responsibility of the applicant or the attorney or agent to make the substance of an interview of record in the application file, unless the examiner indicates he or she will do so. It is the examiner's responsibility to see that such a record is made and to correct material inaccuracies which bear directly on the question of patentability.

Examiners must complete an Interview Summary Form for each interview held where a matter of substance has been discussed during the interview by checking the appropriate boxes and filling in the blanks. Discussions regarding only procedural matters, directed solely to restriction requirements for which interview recordation is otherwise provided for in Section 812.01 of the Manual of Patent Examining Procedure, or pointing out typographical errors or unreadable script in Office actions or the like, are excluded from the interview recordation procedures below. Where the substance of an interview is completely recorded in an Examiners Amendment, no separate Interview Summary Record is required.

The Interview Summary Form shall be given an appropriate Paper No., placed in the right hand portion of the file, and listed on the "Contents" section of the file wrapper. In a personal interview, a duplicate of the Form is given to the applicant (or attorney or agent) at the conclusion of the interview. In the case of a telephone or video-conference interview, the copy is mailed to the applicant's correspondence address either with or prior to the next official communication. If additional correspondence from the examiner is not likely before an allowance or if other circumstances dictate, the Form should be mailed promptly after the interview rather than with the next official communication.

The Form provides for recordation of the following information:
- Application Number (Series Code and Serial Number)
- Name of applicant
- Name of examiner
- Date of interview
- Type of interview (telephonic, video-conference, or personal)
- Name of participant(s) (applicant, attorney or agent, examiner, other PTO personnel, etc.)
- An indication whether or not an exhibit was shown or a demonstration conducted
- An identification of the specific prior art discussed
- An indication whether an agreement was reached and if so, a description of the general nature of the agreement (may be by attachment of a copy of amendments or claims agreed as being allowable). Note: Agreement as to allowability is tentative and does not restrict further action by the examiner to the contrary.
- The signature of the examiner who conducted the interview (if Form is not an attachment to a signed Office action)

It is desirable that the examiner orally remind the applicant of his or her obligation to record the substance of the interview of each case. It should be noted, however, that the Interview Summary Form will not normally be considered a complete and proper recordation of the interview unless it includes, or is supplemented by the applicant or the examiner to include, all of the applicable items required below concerning the substance of the interview.

A complete and proper recordation of the substance of any interview should include at least the following applicable items:
1) A brief description of the nature of any exhibit shown or any demonstration conducted,
2) an identification of the claims discussed,
3) an identification of the specific prior art discussed,
4) an identification of the principal proposed amendments of a substantive nature discussed, unless these are already described on the Interview Summary Form completed by the Examiner,
5) a brief identification of the general thrust of the principal arguments presented to the examiner,
   (The identification of arguments need not be lengthy or elaborate. A verbatim or highly detailed description of the arguments is not required. The identification of the arguments is sufficient if the general nature or thrust of the principal arguments made to the examiner can be understood in the context of the application file. Of course, the applicant may desire to emphasize and fully describe those arguments which he or she feels were or might be persuasive to the examiner.)
6) a general indication of any other pertinent matters discussed, and
7) if appropriate, the general results or outcome of the interview unless already described in the Interview Summary Form completed by the examiner.

Examiners are expected to carefully review the applicant's record of the substance of an interview. If the record is not complete and accurate, the examiner will give the applicant an extendable one month time period to correct the record.

Examiner to Check for Accuracy

If the claims are allowable for other reasons of record, the examiner should send a letter setting forth the examiner's version of the statement attributed to him or her. If the record is complete and accurate, the examiner should place the indication, "Interview Record OK" on the paper recording the substance of the interview along with the date and the examiner's initials.

IN THE UNITED STATES PATENT AND TRADEMARK OFFICE

First Named Inventor	:	Ahmnon D. Moskowitz	Art Unit	:	3733
Serial No.	:	15/820,232	Examiner	:	Pedro Philogene
Filed	:	November 21, 2017	Conf. No.	:	1007
Title	:	ZERO-PROFILE EXPANDABLE INTERVERTEBRAL SPACER DEVICES FOR DISTRACTION AND SPINAL FUSION AND A UNIVERSAL TOOL FOR THEIR PLACEMENT AND EXPANSION			

Commissioner for Patents
P.O. Box 1450
Alexandria, VA 22313-1450

REQUEST FOR CORRECTED OFFICIAL FILING RECEIPT

Please correct the Filing Receipt for the above-referenced application to include the priority application 13/108,982, filed May 16, 2011.

Please supply a corrected Filing Receipt to the undersigned with respect to this application.

No fee is believed to be due. If, however, there are any necessary charges or credits, please apply them to Deposit Account No. 06-1050, referencing the above attorney docket number.

Respectfully submitted,

Date: 3/21/2018

/Stuart A. Nelson/
Stuart A. Nelson
Reg. No. 63,947

Customer Number 26191
Fish & Richardson P.C.
Telephone: (612) 337-2538
Facsimile: (877) 769-7945

61652546.doc

Application Data Sheet 37 CFR 1.76	Attorney Docket Number	~~45335-0020002~~ 46440-0020002
	Application Number	15/820,232

Title of Invention	ZERO-PROFILE EXPANDABLE INTERVERTEBRAL SPACER DEVICES FOR DISTRACTION AND SPINAL FUSION AND A UNIVERSAL TOOL FOR THEIR PLACEMENT AND EXPANSION

The application data sheet is part of the provisional or nonprovisional application for which it is being submitted. The following form contains the bibliographic data arranged in a format specified by the United States Patent and Trademark Office as outlined in 37 CFR 1.76.

Application Information:

Title of the Invention	ZERO-PROFILE EXPANDABLE INTERVERTEBRAL SPACER DEVICES FOR DISTRACTION AND SPINAL FUSION AND A UNIVERSAL TOOL FOR THEIR		
Attorney Docket Number	~~45335-0020002~~ 46440-0020002	**Small Entity Status Claimed**	
Application Type	Nonprovisional		
Subject Matter	Utility		
Total Number of Drawing Sheets (if any)	38	**Suggested Figure for Publication (if any)**	

Filing By Reference:

Only compete this section when filing an application by reference under 35 U.S.C. 111(c) and 37 CFR 1.57(a). Do not complete this section if application papers including a specification and any drawings are being filed. Any domestic benefit or foreign priority information must be provided in the appropriate section(s) below (i.e., "Domestic Benefit/National Stage Information" and "Foreign Priority Information").

For the purposes of a filing date under 37 CFR 1.53(b), the description and any drawings of the present application are replaced by this reference to the previously filed application, subject to conditions and requirements of 37 CFR 1.57(a).

Application number of the previously filed application	Filing Date	Intellectual Property Authority or Country

Domestic Benefit/National Stage Information:

This section allows for the applicant to either claim benefit under 35 U.S.C. 119(e), 120, 121, or 365(c) or indicate National Stage entry from a PCT application. Providing this information in the application data sheet constitutes the specific reference required by 35 U.S.C. 119(e) or 120, and 37 CFR 1.78.
When referring to the current application, please leave the "Application Number" field blank.

Prior Application Status	Pending		
Application Number	Continuity Type	Prior Application Number	Filing Date (**MM/DD/YYYY**)
	Continuation of	14/063,197	10/25/2013

This section allows for the applicant to either claim benefit under 35 U.S.C. 119(e), 120, 121, or 365(c) or indicate National Stage entry from a PCT application. Providing this information in the application data sheet constitutes the specific reference required by 35 U.S.C. 119(e) or 120, and 37 CFR 1.78.
When referring to the current application, please leave the "Application Number" field blank.

Prior	~~Pending~~ Patented			

Application Data Sheet 37 CFR 1.76	Attorney Docket Number	46440-0020002
	Application Number	15/820,232
Title of Invention	ZERO-PROFILE EXPANDABLE INTERVERTEBRAL SPACER DEVICES FOR DISTRACTION AND SPINAL FUSION AND A UNIVERSAL TOOL FOR THEIR PLACEMENT AND EXPANSION	

Application Status					
Application Number	Continuity Type	Prior Application Number	Filing Date (**MM/DD/YYYY**)	Patent Number	Issue Date
14/063,197	Continuation in part of	13/210,150	08/15/2011	9,867,719	1/16/2018

This section allows for the applicant to either claim benefit under 35 U.S.C. 119(e), 120, 121, or 365(c) or indicate National Stage entry from a PCT application. Providing this information in the application data sheet constitutes the specific reference required by 35 U.S.C. 119(e) or 120, and 37 CFR 1.78. When referring to the current application, please leave the "Application Number" field blank.					
Prior Application Status	~~Pending~~ Patented				
Application Number	Continuity Type	Prior Application Number	Filing Date (**MM/DD/YYYY**)	Patent Number	Issue Date
14/063,197	Continuation in part of	13/210,157	08/15/2011	9,889,022	2/13/2018

This section allows for the applicant to either claim benefit under 35 U.S.C. 119(e), 120, 121, or 365(c) or indicate National Stage entry from a PCT application. Providing this information in the application data sheet constitutes the specific reference required by 35 U.S.C. 119(e) or 120, and 37 CFR 1.78. When referring to the current application, please leave the "Application Number" field blank.					
Prior Application Status	~~Pending~~ Patented				
Application Number	Continuity Type	Prior Application Number	Filing Date (**MM/DD/YYYY**)	Patent Number	Issue Date
14/063,197	Continuation in part of	13/210,162	08/15/2011	9,895,238	2/20/2018

This section allows for the applicant to either claim benefit under 35 U.S.C. 119(e), 120, 121, or 365(c) or indicate National Stage entry from a PCT application. Providing this information in the application data sheet constitutes the specific reference required by 35 U.S.C. 119(e) or 120, and 37 CFR 1.78.

Application Data Sheet 37 CFR 1.76	Attorney Docket Number	46440-0020002
	Application Number	15/820,232
Title of Invention	ZERO-PROFILE EXPANDABLE INTERVERTEBRAL SPACER DEVICES FOR DISTRACTION AND SPINAL FUSION AND A UNIVERSAL TOOL FOR THEIR PLACEMENT AND EXPANSION	

When referring to the current application, please leave the "Application Number" field blank.

Prior Application Status	~~Pending~~ Patented				
Application Number	Continuity Type	Prior Application Number	Filing Date (**MM/DD/YYYY**)	Patent Number	Issue Date
14/063,197	Continuation in part of	13/210,168	8/15/2011	9,907,674	3/6/2018

This section allows for the applicant to either claim benefit under 35 U.S.C. 119(e), 120, 121, or 365(c) or indicate National Stage entry from a PCT application. Providing this information in the application data sheet constitutes the specific reference required by 35 U.S.C. 119(e) or 120, and 37 CFR 1.78.
When referring to the current application, please leave the "Application Number" field blank.

Prior Application Status	Patented				
Application Number	Continuity Type	Prior Application Number	Filing Date (**MM/DD/YYYY**)	Patent Number	Issue Date
14063197	Continuation in part of	13/741,361	01/14/2013	9,301,854	04/05/2016

This section allows for the applicant to either claim benefit under 35 U.S.C. 119(e), 120, 121, or 365(c) or indicate National Stage entry from a PCT application. Providing this information in the application data sheet constitutes the specific reference required by 35 U.S.C. 119(e) or 120, and 37 CFR 1.78.
When referring to the current application, please leave the "Application Number" field blank.

Prior Application Status	~~Patented~~ Expired				
Application Number	Continuity Type	Prior Application Number	Filing Date (**MM/DD/YYYY**)	Patent Number	Issue Date
~~13210150~~ 14/063,197	~~Continuation of~~ Claims benefit of provisional	~~13084543~~ 61/801,783	~~2011-04-11~~ 03/15/2013	~~8353913~~	~~2013-01-15~~

Application Data Sheet 37 CFR 1.76	Attorney Docket Number	46440-0020002
	Application Number	15/820,232
Title of Invention	ZERO-PROFILE EXPANDABLE INTERVERTEBRAL SPACER DEVICES FOR DISTRACTION AND SPINAL FUSION AND A UNIVERSAL TOOL FOR THEIR PLACEMENT AND EXPANSION	

This section allows for the applicant to either claim benefit under 35 U.S.C. 119(e), 120, 121, or 365(c) or indicate National Stage entry from a PCT application. Providing this information in the application data sheet constitutes the specific reference required by 35 U.S.C. 119(e) or 120, and 37 CFR 1.78.
When referring to the current application, please leave the "Application Number" field blank.

Prior Application Status	~~Patented~~ Expired				
Application Number	Continuity Type	Prior Application Number	Filing Date (**MM/DD/YYYY**)	Patent Number	Issue Date
~~13084543~~ 14/063,197	~~Division of~~ Claims benefit of provisional	~~11842855~~ 61/718,707	~~2007-08-21~~ 10/25/2012	~~7942903~~	~~2011-05-17~~

This section allows for the applicant to either claim benefit under 35 U.S.C. 119(e), 120, 121, or 365(c) or indicate National Stage entry from a PCT application. Providing this information in the application data sheet constitutes the specific reference required by 35 U.S.C. 119(e) or 120, and 37 CFR 1.78.
When referring to the current application, please leave the "Application Number" field blank.

Prior Application Status	Patented				
Application Number	Continuity Type	Prior Application Number	Filing Date (**MM/DD/YYYY**)	Patent Number	Issue Date
~~13084543~~ 13/210,150	Continuation of	~~13108982~~ 13/084543	~~2011-05-16~~ 04/11/2011	~~9005293~~ 8,353,913	~~2015-04-14~~ 01/15/2013

This section allows for the applicant to either claim benefit under 35 U.S.C. 119(e), 120, 121, or 365(c) or indicate National Stage entry from a PCT application. Providing this information in the application data sheet constitutes the specific reference required by 35 U.S.C. 119(e) or 120, and 37 CFR 1.78.
When referring to the current application, please leave the "Application Number" field blank.

Prior Application Status	Patented				
Application Number	Continuity Type	Prior Application Number	Filing Date (**MM/DD/YYYY**)	Patent Number	Issue Date
~~13108982~~ 13/210,150	Continuation of	~~11842855~~ 13/108,982	~~2007-08-21~~ 05/16/2011	~~7942903~~ 9,005,293	~~2011-05-17~~ 04/14/2015

Application Data Sheet 37 CFR 1.76	Attorney Docket Number	46440-0020002
	Application Number	15/820,232
Title of Invention	ZERO-PROFILE EXPANDABLE INTERVERTEBRAL SPACER DEVICES FOR DISTRACTION AND SPINAL FUSION AND A UNIVERSAL TOOL FOR THEIR PLACEMENT AND EXPANSION	

This section allows for the applicant to either claim benefit under 35 U.S.C. 119(e), 120, 121, or 365(c) or indicate National Stage entry from a PCT application. Providing this information in the application data sheet constitutes the specific reference required by 35 U.S.C. 119(e) or 120, and 37 CFR 1.78.
When referring to the current application, please leave the "Application Number" field blank.

Prior Application Status	Patented				
Application Number	Continuity Type	Prior Application Number	Filing Date (**MM/DD/YYYY**)	Patent Number	Issue Date
~~11842855~~ 13/210,157	~~Continuation in part of~~ Continuation of	~~11536815~~ 13/084,543	~~2006-09-29~~ 04/11/2011	~~7846188~~ 8,353,913	~~2010-12-07~~ 01/15/2013

This section allows for the applicant to either claim benefit under 35 U.S.C. 119(e), 120, 121, or 365(c) or indicate National Stage entry from a PCT application. Providing this information in the application data sheet constitutes the specific reference required by 35 U.S.C. 119(e) or 120, and 37 CFR 1.78.
When referring to the current application, please leave the "Application Number" field blank.

Prior Application Status	Patented				
Application Number	Continuity Type	Prior Application Number	Filing Date (**MM/DD/YYYY**)	Patent Number	Issue Date
~~11536815~~ 13/210,157	~~Continuation in part of~~ Continuation of	~~11208644~~ 13/108,982	~~2005-08-23~~ 05/16/2011	~~7704279~~ 9,005,293	~~2010-04-27~~ 04/14/2015

This section allows for the applicant to either claim benefit under 35 U.S.C. 119(e), 120, 121, or 365(c) or indicate National Stage entry from a PCT application. Providing this information in the application data sheet constitutes the specific reference required by 35 U.S.C. 119(e) or 120, and 37 CFR 1.78.
When referring to the current application, please leave the "Application Number" field blank.

Prior Application Status	~~Expired~~ Patented				
Application Number	Continuity Type	Prior Application Number	Filing Date (**MM/DD/YYYY**)	Patent Number	Issue Date
~~11208644~~	~~Claims~~	~~60670231~~ 13/084,543	~~2005-04-12~~ 04/11/2011	8,353,913	01/15/2013

Application Data Sheet 37 CFR 1.76	Attorney Docket Number	46440-0020002
	Application Number	15/820,232
Title of Invention	ZERO-PROFILE EXPANDABLE INTERVERTEBRAL SPACER DEVICES FOR DISTRACTION AND SPINAL FUSION AND A UNIVERSAL TOOL FOR THEIR PLACEMENT AND EXPANSION	

13/210,162	~~benefit of provisional~~ Continuation of				

This section allows for the applicant to either claim benefit under 35 U.S.C. 119(e), 120, 121, or 365(c) or indicate National Stage entry from a PCT application. Providing this information in the application data sheet constitutes the specific reference required by 35 U.S.C. 119(e) or 120, and 37 CFR 1.78. When referring to the current application, please leave the "Application Number" field blank.					
Prior Application Status	Patented				
Application Number	Continuity Type	Prior Application Number	Filing Date (**MM/DD/YYYY**)	Patent Number	Issue Date
~~13210157~~ 13/210,162	Continuation of	~~13084543~~ 13/108,982	~~2011-04-11~~ 05/16/2011	~~8353913~~ 9,005,293	~~2013-01-15~~ 04/14/2015

This section allows for the applicant to either claim benefit under 35 U.S.C. 119(e), 120, 121, or 365(c) or indicate National Stage entry from a PCT application. Providing this information in the application data sheet constitutes the specific reference required by 35 U.S.C. 119(e) or 120, and 37 CFR 1.78. When referring to the current application, please leave the "Application Number" field blank.					
Prior Application Status	Patented				
Application Number	Continuity Type	Prior Application Number	Filing Date (**MM/DD/YYYY**)	Patent Number	Issue Date
~~13210162~~ 13/210,168	Continuation of	13/084,543	04/11/2011	8,353,913	01/15/2013

This section allows for the applicant to either claim benefit under 35 U.S.C. 119(e), 120, 121, or 365(c) or indicate National Stage entry from a PCT application. Providing this information in the application data sheet constitutes the specific reference required by 35 U.S.C. 119(e) or 120, and 37 CFR 1.78. When referring to the current application, please leave the "Application Number" field blank.				
Prior Application	Patented			

Application Data Sheet 37 CFR 1.76	Attorney Docket Number	46440-0020002
	Application Number	15/820,232
Title of Invention	ZERO-PROFILE EXPANDABLE INTERVERTEBRAL SPACER DEVICES FOR DISTRACTION AND SPINAL FUSION AND A UNIVERSAL TOOL FOR THEIR PLACEMENT AND EXPANSION	

Status					
Application Number	Continuity Type	Prior Application Number	Filing Date (**MM/DD/YYYY**)	Patent Number	Issue Date
13/210,168	Continuation of	~~13084543~~ 13/108,982	~~2011-04-11~~ 05/16/2011	~~8353913~~ 9,005,293	~~2013-01-15~~ 04/14/2015

This section allows for the applicant to either claim benefit under 35 U.S.C. 119(e), 120, 121, or 365(c) or indicate National Stage entry from a PCT application. Providing this information in the application data sheet constitutes the specific reference required by 35 U.S.C. 119(e) or 120, and 37 CFR 1.78. When referring to the current application, please leave the "Application Number" field blank.					
Prior Application Status	Patented				
Application Number	Continuity Type	Prior Application Number	Filing Date (**MM/DD/YYYY**)	Patent Number	Issue Date
13/741,361	Continuation of	13/084,543	04/11/2011	8,353,913	01/15/2013

This section allows for the applicant to either claim benefit under 35 U.S.C. 119(e), 120, 121, or 365(c) or indicate National Stage entry from a PCT application. Providing this information in the application data sheet constitutes the specific reference required by 35 U.S.C. 119(e) or 120, and 37 CFR 1.78. When referring to the current application, please leave the "Application Number" field blank.					
Prior Application Status	~~Expired~~ Patented				
Application Number	Continuity Type	Prior Application Number	Filing Date (**MM/DD/YYYY**)	Patent Number	Issue Date
~~14063197~~ 13/7413,61	~~Claims benefit of provisional~~ Continuation of	~~61801783~~ 13/108,982	~~2013-03-15~~ 05/16/2011	9,005,293	04/14/2015

Application Data Sheet 37 CFR 1.76	Attorney Docket Number	46440-0020002
	Application Number	15/820,232
Title of Invention	ZERO-PROFILE EXPANDABLE INTERVERTEBRAL SPACER DEVICES FOR DISTRACTION AND SPINAL FUSION AND A UNIVERSAL TOOL FOR THEIR PLACEMENT AND EXPANSION	

This section allows for the applicant to either claim benefit under 35 U.S.C. 119(e), 120, 121, or 365(c) or indicate National Stage entry from a PCT application. Providing this information in the application data sheet constitutes the specific reference required by 35 U.S.C. 119(e) or 120, and 37 CFR 1.78.
When referring to the current application, please leave the "Application Number" field blank.

Prior Application Status	~~Expired~~ Patented				
Application Number	Continuity Type	Prior Application Number	Filing Date (**MM/DD/YYYY**)	Patent Number	Issue Date
~~14063197~~ 13/084,543	~~Claims benefit of provisional~~ Continuation of	~~61718707~~ 11/842,855	~~2012-10-25~~ 08/21/2007	7,942,903	05/17/2011

This section allows for the applicant to either claim benefit under 35 U.S.C. 119(e), 120, 121, or 365(c) or indicate National Stage entry from a PCT application. Providing this information in the application data sheet constitutes the specific reference required by 35 U.S.C. 119(e) or 120, and 37 CFR 1.78.
When referring to the current application, please leave the "Application Number" field blank.

Prior Application Status	Patented				
Application Number	Continuity Type	Prior Application Number	Filing Date (**MM/DD/YYYY**)	Patent Number	Issue Date
13/108,982	Continuation of	11/842,855	08/21/2007	7,942,903	05/17/2011

This section allows for the applicant to either claim benefit under 35 U.S.C. 119(e), 120, 121, or 365(c) or indicate National Stage entry from a PCT application. Providing this information in the application data sheet constitutes the specific reference required by 35 U.S.C. 119(e) or 120, and 37 CFR 1.78.
When referring to the current application, please leave the "Application Number" field blank.

Prior Application Status	Patented				
Application Number	Continuity Type	Prior Application Number	Filing Date (**MM/DD/YYYY**)	Patent Number	Issue Date
11/842,855	Continuation	11/536,815	09/29/2006	7,846,188	12/07/2010

Application Data Sheet 37 CFR 1.76	Attorney Docket Number	46440-0020002
	Application Number	15/820,232
Title of Invention	ZERO-PROFILE EXPANDABLE INTERVERTEBRAL SPACER DEVICES FOR DISTRACTION AND SPINAL FUSION AND A UNIVERSAL TOOL FOR THEIR PLACEMENT AND EXPANSION	

	in part of				

This section allows for the applicant to either claim benefit under 35 U.S.C. 119(e), 120, 121, or 365(c) or indicate National Stage entry from a PCT application. Providing this information in the application data sheet constitutes the specific reference required by 35 U.S.C. 119(e) or 120, and 37 CFR 1.78.
When referring to the current application, please leave the "Application Number" field blank.

Prior Application Status	Patented				
Application Number	Continuity Type	Prior Application Number	Filing Date (**MM/DD/YYYY**)	Patent Number	Issue Date
11/536,815	Continuation in part of	11/208,644	08/23/2005	7,704,279	04/27/2010

This section allows for the applicant to either claim benefit under 35 U.S.C. 119(e), 120, 121, or 365(c) or indicate National Stage entry from a PCT application. Providing this information in the application data sheet constitutes the specific reference required by 35 U.S.C. 119(e) or 120, and 37 CFR 1.78.
When referring to the current application, please leave the "Application Number" field blank.

Prior Application Status	~~Patented~~ Expired		
Application Number	Continuity Type	Prior Application Number	Filing Date (**MM/DD/YYYY**)
11/208,644	Claims benefit of provisional	60/670,231	04/12/2005

Signature:

A signature of the applicant or representative is required in accordance with 37 CFR 1.33 and 10.18. Please see 37 CFR 1.4(d) for the form of the signature.

Signature	/Stuart A. Nelson/			Date (**MM/DD/YYYY**)	3/21/2018
First Name	Stuart	Last Name	Nelson	Registration Number	63,947

61645860.doc

Electronic Acknowledgement Receipt

EFS ID:	32120456
Application Number:	15820232
International Application Number:	
Confirmation Number:	1007
Title of Invention:	ZERO-PROFILE EXPANDABLE INTERVERTEBRAL SPACER DEVICES FOR DISTRACTION AND SPINAL FUSION AND A UNIVERSAL TOOL FOR THEIR PLACEMENT AND EXPANSION
First Named Inventor/Applicant Name:	Ahmnon D. Moskowitz
Customer Number:	26191
Filer:	Stuart A. Nelson/Abby Remer
Filer Authorized By:	Stuart A. Nelson
Attorney Docket Number:	45335-0020002
Receipt Date:	21-MAR-2018
Filing Date:	21-NOV-2017
Time Stamp:	17:16:31
Application Type:	Utility under 35 USC 111(a)

Payment information:

Submitted with Payment	no

File Listing:

Document Number	Document Description	File Name	File Size(Bytes)/ Message Digest	Multi Part /.zip	Pages (if appl.)
1	Request for Corrected Filing Receipt	Request.pdf	51218 90bae3a731ad3bb623ffa26ce2e33d2b8cf95be5	no	1

Warnings:

Information:					
2	Application Data Sheet	SupplementalADS.pdf	125168 8190c6d1228bca8cb9edb156b307e6e8edba3a44	no	9
Warnings:					
Information:					
This is not an USPTO supplied ADS fillable form					
			Total Files Size (in bytes):	176386	

This Acknowledgement Receipt evidences receipt on the noted date by the USPTO of the indicated documents, characterized by the applicant, and including page counts, where applicable. It serves as evidence of receipt similar to a Post Card, as described in MPEP 503.

New Applications Under 35 U.S.C. 111
If a new application is being filed and the application includes the necessary components for a filing date (see 37 CFR 1.53(b)-(d) and MPEP 506), a Filing Receipt (37 CFR 1.54) will be issued in due course and the date shown on this Acknowledgement Receipt will establish the filing date of the application.
National Stage of an International Application under 35 U.S.C. 371
If a timely submission to enter the national stage of an international application is compliant with the conditions of 35 U.S.C. 371 and other applicable requirements a Form PCT/DO/EO/903 indicating acceptance of the application as a national stage submission under 35 U.S.C. 371 will be issued in addition to the Filing Receipt, in due course.
New International Application Filed with the USPTO as a Receiving Office
If a new international application is being filed and the international application includes the necessary components for an international filing date (see PCT Article 11 and MPEP 1810), a Notification of the International Application Number and of the International Filing Date (Form PCT/RO/105) will be issued in due course, subject to prescriptions concerning national security, and the date shown on this Acknowledgement Receipt will establish the international filing date of the application.

UNITED STATES PATENT AND TRADEMARK OFFICE

UNITED STATES DEPARTMENT OF COMMERCE
United States Patent and Trademark Office
Address: COMMISSIONER FOR PATENTS
P.O. Box 1450
Alexandria, Virginia 22313-1450
www.uspto.gov

APPLICATION NUMBER	FILING OR 371(C) DATE	FIRST NAMED APPLICANT	ATTY. DOCKET NO./TITLE
15/820,232	11/21/2017	Ahmnon D. Moskowitz	45335-0020002

CONFIRMATION NO. 1007

26191
FISH & RICHARDSON P.C. (TC)
PO BOX 1022
MINNEAPOLIS, MN 55440-1022

PUBLICATION NOTICE

"OC000000098223340"

Title:ZERO-PROFILE EXPANDABLE INTERVERTEBRAL SPACER DEVICES FOR DISTRACTION AND SPINAL FUSION AND A UNIVERSAL TOOL FOR THEIR PLACEMENT AND EXPANSION

Publication No.US-2018-0078383-A1
Publication Date:03/22/2018

NOTICE OF PUBLICATION OF APPLICATION

The above-identified application will be electronically published as a patent application publication pursuant to 37 CFR 1.211, et seq. The patent application publication number and publication date are set forth above.

The publication may be accessed through the USPTO's publically available Searchable Databases via the Internet at www.uspto.gov. The direct link to access the publication is currently http://www.uspto.gov/patft/.

The publication process established by the Office does not provide for mailing a copy of the publication to applicant. A copy of the publication may be obtained from the Office upon payment of the appropriate fee set forth in 37 CFR 1.19(a)(1). Orders for copies of patent application publications are handled by the USPTO's Public Records Division. The Public Records Division can be reached by telephone at (571) 272-3150 or (800) 972-6382, by facsimile at (571) 273-3250, by mail addressed to the United States Patent and Trademark Office, Public Records Division, Alexandria, VA 22313-1450 or via the Internet.

In addition, information on the status of the application, including the mailing date of Office actions and the dates of receipt of correspondence filed in the Office, may also be accessed via the Internet through the Patent Electronic Business Center at www.uspto.gov using the public side of the Patent Application Information and Retrieval (PAIR) system. The direct link to access this status information is currently https://portal.uspto.gov/pair/PublicPair. Prior to publication, such status information is confidential and may only be obtained by applicant using the private side of PAIR.

Further assistance in electronically accessing the publication, or about PAIR, is available by calling the Patent Electronic Business Center at 1-866-217-9197.

Office of Data Managment, Application Assistance Unit (571) 272-4000, or (571) 272-4200, or 1-888-786-0101

IN THE UNITED STATES PATENT AND TRADEMARK OFFICE

First Named Inventor	:	Ahmnon D. Moskowitz	Art Unit	:	3733
Serial No.	:	15/820,232	Examiner	:	Pedro Philogene
Filed	:	November 21, 2017	Conf. No.	:	1007
Title	:	ZERO-PROFILE EXPANDABLE INTERVERTEBRAL SPACER DEVICES FOR DISTRACTION AND SPINAL FUSION AND A UNIVERSAL TOOL FOR THEIR PLACEMENT AND EXPANSION			

Commissioner for Patents
P.O. Box 1450
Alexandria, VA 22313-1450

SUPPLEMENTAL AMENDMENT

Prior to examination, please amend the application as indicated on the following pages.

Amendments to the Specification:

Please replace the paragraphs [0001] – [0004] with the following amended paragraphs:

[0001] This application is a Continuation Application of application Serial No. 14/063,197, filed on October 25, 2013, which is a Continuation-in-part Application of co-pending application Serial No. 13/210,150, filed August 15, 2011, now U.S. Patent No. 9,867,719 issued January 16, 2018, and a Continuation-in-part Application of co-pending application Serial No. 13/210,157, filed August 15, 2011, now U.S. Patent No. 9,889,022 issued February 13, 2018, and a Continuation-in-part Application of co-pending application Serial No. 13/210,162, filed August 15, 2011, now U.S. Patent No. 9,895,238 issued February 20, 2018 and a Continuation-in-part Application of co-pending application Serial No. 13/210,168, filed August 15, 2011, now U.S. Patent No. 9,907,674 issued March 6, 2018, and a Continuation-in-part Application of application Serial No. 13/741,361, filed on January 14, 2013, now U.S. Patent No. 9,301,854 issued April 5, 2016.

[0002] Serial No. 14/063,197, filed on October 25, 2013, claims priority under U.S.C. § 119(e) of U.S. provisional application Nos. 61/801,783, filed March 15, 2013 and 61/718,707, filed October 25, 2012.

[0003] Serial No. 13/210,150, filed August 15, 2011, is a Continuation of application Serial No. 13/084,543, filed April 11, 2011, now U.S. Patent No. 8,353,913 issued on January 15, 2013, and is a Continuation of 13/108,982, filed May 16, 2011, now U.S. Patent No. 9,005,293 issued April 14, 2015.

[0004] Serial No. 13/210,157, filed August 15, 2011, is a Continuation of application Serial No. 13/084,543, filed April 11, 2011, now U.S. Patent No. 8,353,913 issued on January 15, 2013, and is a Continuation of 13/108,982, filed May 16, 2011, now U.S. Patent No. 9,005,293 issued April 14, 2015.

[0005] Serial No. 13/210,162, filed August 15, 2011, is a Continuation of application Serial No. 13/084,543, filed April 11, 2011, now U.S. Patent No. 8,353,913 issued on January 15, 2013, and is a Continuation of 13/108,982, filed May 16, 2011, now U.S. Patent No. 9,005,293 issued April 14, 2015.

[0006] Serial No. 13/210,168, filed August 15, 2011, is a Continuation of application Serial No. 13/084,543, filed April 11, 2011, now U.S. Patent No. 8,353,913 issued on January 15, 2013, and is a Continuation of 13/108,982, filed May 16, 2011, now U.S. Patent No. 9,005,293 issued April 14, 2015.

[0007] Serial No. 13/741,361, filed January 14, 2013, is a Continuation of application Serial No. 13/084,543, filed April 11, 2011, now U.S. Patent No. 8,353,913 issued on January 15, 2013, and is a Continuation of 13/108,982, filed May 16, 2011, now U.S. Patent No. 9,005,293 issued April 14, 2015.

[0008] Serial No. 13/084,543, filed April 11, 2011, is a Continuation of application Serial No. 11/842,855, filed August 21, 2007, now U.S. Patent No. 7,942,903 issued May 17, 2011.

[0009] Serial No. 13/108,982, filed May 16, 2011, is a Continuation of application Serial No. 11/842,855, filed August 21, 2007, now U.S. Patent No. 7,942,903 issued May 17, 2011, which is a Continuation-in-part of application Serial No. 11/536,815, filed September 29, 2006, now U.S. Patent No. 7,846,188 issued December 7, 2010, which is a Continuation-in-part of application Serial No.11/208,644, filed August 23, 2005, now U.S. Patent No. 7,704,279 issued April 27, 2010, which claims priority under 35 U.S.C. § 119(e) of U.S. provisional application No. 60/670,231, filed on April 12, 2005; the entire contents of all the above identified patent applications are hereby incorporated by reference.

REMARKS

The amendments herein are made to correct the recitation of the priority claim. Please apply any necessary charges or credits to Deposit Account 06-1050, referencing the above attorney docket number.

Respectfully submitted,

Date: 3/22/2018

/Stuart A. Nelson/

Stuart A. Nelson
Reg. No. 63,947

Customer Number 26191
Fish & Richardson P.C.
Telephone: (612) 337-2538
Facsimile: (877) 769-7945

61652891.doc

Electronic Acknowledgement Receipt

EFS ID:	32129268
Application Number:	15820232
International Application Number:	
Confirmation Number:	1007
Title of Invention:	ZERO-PROFILE EXPANDABLE INTERVERTEBRAL SPACER DEVICES FOR DISTRACTION AND SPINAL FUSION AND A UNIVERSAL TOOL FOR THEIR PLACEMENT AND EXPANSION
First Named Inventor/Applicant Name:	Ahmnon D. Moskowitz
Customer Number:	26191
Filer:	Stuart A. Nelson/Abby Remer
Filer Authorized By:	Stuart A. Nelson
Attorney Docket Number:	45335-0020002
Receipt Date:	22-MAR-2018
Filing Date:	21-NOV-2017
Time Stamp:	14:52:16
Application Type:	Utility under 35 USC 111(a)

Payment information:

Submitted with Payment	no

File Listing:

Document Number	Document Description	File Name	File Size(Bytes)/ Message Digest	Multi Part /.zip	Pages (if appl.)
1		SuppAmendment.pdf	71796 cb9ef285135f889f5dabb3e0f5e54ac19fcb19dc	yes	4

	Multipart Description/PDF files in .zip description		
	Document Description	**Start**	**End**
	Preliminary Amendment	1	1
	Specification	2	3
	Applicant Arguments/Remarks Made in an Amendment	4	4

Warnings:

Information:

Total Files Size (in bytes):	71796

This Acknowledgement Receipt evidences receipt on the noted date by the USPTO of the indicated documents, characterized by the applicant, and including page counts, where applicable. It serves as evidence of receipt similar to a Post Card, as described in MPEP 503.

<u>New Applications Under 35 U.S.C. 111</u>
If a new application is being filed and the application includes the necessary components for a filing date (see 37 CFR 1.53(b)-(d) and MPEP 506), a Filing Receipt (37 CFR 1.54) will be issued in due course and the date shown on this Acknowledgement Receipt will establish the filing date of the application.
<u>National Stage of an International Application under 35 U.S.C. 371</u>
If a timely submission to enter the national stage of an international application is compliant with the conditions of 35 U.S.C. 371 and other applicable requirements a Form PCT/DO/EO/903 indicating acceptance of the application as a national stage submission under 35 U.S.C. 371 will be issued in addition to the Filing Receipt, in due course.
<u>New International Application Filed with the USPTO as a Receiving Office</u>
If a new international application is being filed and the international application includes the necessary components for an international filing date (see PCT Article 11 and MPEP 1810), a Notification of the International Application Number and of the International Filing Date (Form PCT/RO/105) will be issued in due course, subject to prescriptions concerning national security, and the date shown on this Acknowledgement Receipt will establish the international filing date of the application.

UNITED STATES PATENT AND TRADEMARK OFFICE

UNITED STATES DEPARTMENT OF COMMERCE
United States Patent and Trademark Office
Address: COMMISSIONER FOR PATENTS
P.O. Box 1450
Alexandria, Virginia 22313-1450
www.uspto.gov

APPLICATION NUMBER	FILING or 371(c) DATE	GRP ART UNIT	FIL FEE REC'D	ATTY.DOCKET.NO	TOT CLAIMS	IND CLAIMS
15/820,232	11/21/2017	3733	730	46440-0020002	20	3

CONFIRMATION NO. 1007

CORRECTED FILING RECEIPT

26191
FISH & RICHARDSON P.C. (TC)
PO BOX 1022
MINNEAPOLIS, MN 55440-1022

OC000000098337245

Date Mailed: 03/29/2018

Receipt is acknowledged of this non-provisional patent application. The application will be taken up for examination in due course. Applicant will be notified as to the results of the examination. Any correspondence concerning the application must include the following identification information: the U.S. APPLICATION NUMBER, FILING DATE, NAME OF APPLICANT, and TITLE OF INVENTION. Fees transmitted by check or draft are subject to collection. Please verify the accuracy of the data presented on this receipt. **If an error is noted on this Filing Receipt, please submit a written request for a Filing Receipt Correction. Please provide a copy of this Filing Receipt with the changes noted thereon. If you received a "Notice to File Missing Parts" for this application, please submit any corrections to this Filing Receipt with your reply to the Notice. When the USPTO processes the reply to the Notice, the USPTO will generate another Filing Receipt incorporating the requested corrections**

Inventor(s)

Ahmnon D. Moskowitz, Rockville, MD;
Mosheh T. Moskowitz, Rockville, MD;
Pablo A. Valdivia Y. Alvarado, Cambridge, MA;
Eric Sugalski, Arlington, MA;
Nathan C. Moskowitz, Rockville, MD;

Applicant(s)

Nathan C. Moskowitz, Rockville, MD;

Power of Attorney: The patent practitioners associated with Customer Number 26191

Domestic Priority data as claimed by applicant

This application is a CON of 14/063,197 10/25/2013 PAT 9848993
which is a CIP of 13/210,150 08/15/2011 PAT 9867719
and is a CIP of 13/210,157 08/15/2011 PAT 9889022
and is a CIP of 13/210,162 08/15/2011 PAT 9895238
and is a CIP of 13/210,168 08/15/2011 PAT 9907674
and is a CIP of 13/741,361 01/14/2013 PAT 9301854
and claims benefit of 61/801,783 03/15/2013
and claims benefit of 61/718,707 10/25/2012
and said 13/210,150 08/15/2011
is a CIP of 13/084,543 04/11/2011 PAT 8353913
and is a CON of 13/108,982 05/16/2011 PAT 9005293
and said 13/210,157 08/15/2011
is a CON of 13/084,543 04/11/2011 PAT 8353913
and is a CON of 13/108,982 05/16/2011 PAT 9005293
and said 13/210,168 08/15/2011

is a CON of 13/084,543 04/11/2011 PAT 8353913
and is a CON of 13/108,982 05/16/2011 PAT 9005293
and said 13/741,361 01/14/2013
is a CON of 13/084,543 04/11/2011 PAT 8353913
and is a CON of 13/108,982 05/16/2011 PAT 9005293
and said 13/084,543 04/11/2011
is a CON of 11/842,855 08/21/2007 PAT 7942903
and said 13/108,982 05/16/2011
is a CON of 11/842,855 08/21/2007 PAT 7942903
which is a CON of 11/536,815 09/29/2006 PAT 7846188
which is a CIP of 11/208,644 08/23/2005 PAT 7704279
which claims benefit of 60/670,231 04/12/2005

Foreign Applications for which priority is claimed (You may be eligible to benefit from the **Patent Prosecution Highway** program at the USPTO. Please see http://www.uspto.gov for more information.) - None.
Foreign application information must be provided in an Application Data Sheet in order to constitute a claim to foreign priority. See 37 CFR 1.55 and 1.76.

Permission to Access Application via Priority Document Exchange: Yes

Permission to Access Search Results: Yes

Applicant may provide or rescind an authorization for access using Form PTO/SB/39 or Form PTO/SB/69 as appropriate.

If Required, Foreign Filing License Granted: 12/11/2017

The country code and number of your priority application, to be used for filing abroad under the Paris Convention, is **US 15/820,232**

Projected Publication Date: Not Applicable

Non-Publication Request: No

Early Publication Request: No
**** SMALL ENTITY ****
Title

ZERO-PROFILE EXPANDABLE INTERVERTEBRAL SPACER DEVICES FOR DISTRACTION AND SPINAL FUSION AND A UNIVERSAL TOOL FOR THEIR PLACEMENT AND EXPANSION

Preliminary Class

623

Statement under 37 CFR 1.55 or 1.78 for AIA (First Inventor to File) Transition Applications: No

PROTECTING YOUR INVENTION OUTSIDE THE UNITED STATES

Since the rights granted by a U.S. patent extend only throughout the territory of the United States and have no effect in a foreign country, an inventor who wishes patent protection in another country must apply for a patent in a specific country or in regional patent offices. Applicants may wish to consider the filing of an international application under the Patent Cooperation Treaty (PCT). An international (PCT) application generally has the same effect as a regular national patent application in each PCT-member country. The PCT process **simplifies** the filing of patent applications on the same invention in member countries, but **does not result** in a grant of "an international

patent" and does not eliminate the need of applicants to file additional documents and fees in countries where patent protection is desired.

Almost every country has its own patent law, and a person desiring a patent in a particular country must make an application for patent in that country in accordance with its particular laws. Since the laws of many countries differ in various respects from the patent law of the United States, applicants are advised to seek guidance from specific foreign countries to ensure that patent rights are not lost prematurely.

Applicants also are advised that in the case of inventions made in the United States, the Director of the USPTO must issue a license before applicants can apply for a patent in a foreign country. The filing of a U.S. patent application serves as a request for a foreign filing license. The application's filing receipt contains further information and guidance as to the status of applicant's license for foreign filing.

Applicants may wish to consult the USPTO booklet, "General Information Concerning Patents" (specifically, the section entitled "Treaties and Foreign Patents") for more information on timeframes and deadlines for filing foreign patent applications. The guide is available either by contacting the USPTO Contact Center at 800-786-9199, or it can be viewed on the USPTO website at http://www.uspto.gov/web/offices/pac/doc/general/index.html.

For information on preventing theft of your intellectual property (patents, trademarks and copyrights), you may wish to consult the U.S. Government website, http://www.stopfakes.gov. Part of a Department of Commerce initiative, this website includes self-help "toolkits" giving innovators guidance on how to protect intellectual property in specific countries such as China, Korea and Mexico. For questions regarding patent enforcement issues, applicants may call the U.S. Government hotline at 1-866-999-HALT (1-866-999-4258).

LICENSE FOR FOREIGN FILING UNDER

Title 35, United States Code, Section 184

Title 37, Code of Federal Regulations, 5.11 & 5.15

GRANTED

The applicant has been granted a license under 35 U.S.C. 184, if the phrase "IF REQUIRED, FOREIGN FILING LICENSE GRANTED" followed by a date appears on this form. Such licenses are issued in all applications where the conditions for issuance of a license have been met, regardless of whether or not a license may be required as set forth in 37 CFR 5.15. The scope and limitations of this license are set forth in 37 CFR 5.15(a) unless an earlier license has been issued under 37 CFR 5.15(b). The license is subject to revocation upon written notification. The date indicated is the effective date of the license, unless an earlier license of similar scope has been granted under 37 CFR 5.13 or 5.14.

This license is to be retained by the licensee and may be used at any time on or after the effective date thereof unless it is revoked. This license is automatically transferred to any related applications(s) filed under 37 CFR 1.53(d). This license is not retroactive.

The grant of a license does not in any way lessen the responsibility of a licensee for the security of the subject matter as imposed by any Government contract or the provisions of existing laws relating to espionage and the national security or the export of technical data. Licensees should apprise themselves of current regulations especially with respect to certain countries, of other agencies, particularly the Office of Defense Trade Controls, Department of State (with respect to Arms, Munitions and Implements of War (22 CFR 121-128)); the Bureau of Industry and

Security, Department of Commerce (15 CFR parts 730-774); the Office of Foreign AssetsControl, Department of Treasury (31 CFR Parts 500+) and the Department of Energy.

NOT GRANTED

No license under 35 U.S.C. 184 has been granted at this time, if the phrase "IF REQUIRED, FOREIGN FILING LICENSE GRANTED" DOES NOT appear on this form. Applicant may still petition for a license under 37 CFR 5.12, if a license is desired before the expiration of 6 months from the filing date of the application. If 6 months has lapsed from the filing date of this application and the licensee has not received any indication of a secrecy order under 35 U.S.C. 181, the licensee may foreign file the application pursuant to 37 CFR 5.15(b).

SelectUSA

The United States represents the largest, most dynamic marketplace in the world and is an unparalleled location for business investment, innovation, and commercialization of new technologies. The U.S. offers tremendous resources and advantages for those who invest and manufacture goods here. Through SelectUSA, our nation works to promote and facilitate business investment. SelectUSA provides information assistance to the international investor community; serves as an ombudsman for existing and potential investors; advocates on behalf of U.S. cities, states, and regions competing for global investment; and counsels U.S. economic development organizations on investment attraction best practices. To learn more about why the United States is the best country in the world to develop technology, manufacture products, deliver services, and grow your business, visit http://www.SelectUSA.gov or call +1-202-482-6800.

IN THE UNITED STATES PATENT AND TRADEMARK OFFICE

First Named Inventor	:	Ahmnon D. Moskowitz	Art Unit	:	3733
Serial No.	:	15/820,232	Examiner	:	Pedro Philogene
Filed	:	November 21, 2017	Conf. No.	:	1007
Title	:	ZERO-PROFILE EXPANDABLE INTERVERTEBRAL SPACER DEVICES FOR DISTRACTION AND SPINAL FUSION AND A UNIVERSAL TOOL FOR THEIR PLACEMENT AND EXPANSION			

Commissioner for Patents
P.O. Box 1450
Alexandria, VA 22313-1450

REQUEST FOR CORRECTED OFFICIAL FILING RECEIPT

Please correct the Filing Receipt for the above-referenced application to include the correct priority chain.

Please supply a corrected Filing Receipt to the undersigned with respect to this application. A copy of the original Filing Receipt showing the desired changes is attached for your convenience.

No fee is believed to be due. If, however, there are any necessary charges or credits, please apply them to Deposit Account No. 06-1050, referencing the above attorney docket number.

Respectfully submitted,

Date: 4/9/2018

/Stuart A. Nelson/
Stuart A. Nelson
Reg. No. 63,947

Customer Number 26191
Fish & Richardson P.C.
Telephone: (612) 337-2538
Facsimile: (877) 769-7945

61661746.doc

UNITED STATES PATENT AND TRADEMARK OFFICE

UNITED STATES DEPARTMENT OF COMMERCE
United States Patent and Trademark Office
Address: COMMISSIONER FOR PATENTS
P.O. Box 1450
Alexandria, Virginia 22313-1450
www.uspto.gov

APPLICATION NUMBER	FILING or 371(c) DATE	GRP ART UNIT	FIL FEE REC'D	ATTY.DOCKET.NO	TOT CLAIMS	IND CLAIMS
15/820,232	11/21/2017	3733	730	46440-0020002	20	3

CONFIRMATION NO. 1007

CORRECTED FILING RECEIPT

26191
FISH & RICHARDSON P.C. (TC)
PO BOX 1022
MINNEAPOLIS, MN 55440-1022

Date Mailed: 03/29/2018

Receipt is acknowledged of this non-provisional patent application. The application will be taken up for examination in due course. Applicant will be notified as to the results of the examination. Any correspondence concerning the application must include the following identification information: the U.S. APPLICATION NUMBER, FILING DATE, NAME OF APPLICANT, and TITLE OF INVENTION. Fees transmitted by check or draft are subject to collection. Please verify the accuracy of the data presented on this receipt. **If an error is noted on this Filing Receipt, please submit a written request for a Filing Receipt Correction. Please provide a copy of this Filing Receipt with the changes noted thereon. If you received a "Notice to File Missing Parts" for this application, please submit any corrections to this Filing Receipt with your reply to the Notice. When the USPTO processes the reply to the Notice, the USPTO will generate another Filing Receipt incorporating the requested corrections**

Inventor(s)

Ahmnon D. Moskowitz, Rockville, MD;
Mosheh T. Moskowitz, Rockville, MD;
Pablo A. Valdivia Y. Alvarado, Cambridge, MA;
Eric Sugalski, Arlington, MA;
Nathan C. Moskowitz, Rockville, MD;

Applicant(s)

Nathan C. Moskowitz, Rockville, MD;

Power of Attorney: The patent practitioners associated with Customer Number 26191

Domestic Priority data as claimed by applicant

This application is a CON of 14/063,197 10/25/2013 PAT 9848993
which is a CIP of 13/210,150 08/15/2011 PAT 9867719
and is a CIP of 13/210,157 08/15/2011 PAT 9889022
and is a CIP of 13/210,162 08/15/2011 PAT 9895238
and is a CIP of 13/210,168 08/15/2011 PAT 9907674
and is a CIP of 13/741,361 01/14/2013 PAT 9301854
and claims benefit of 61/801,783 03/15/2013
and claims benefit of 61/718,707 10/25/2012
and said 13/210,150 08/15/2011
is a ~~CIP~~ of 13/084,543 04/11/2011 PAT 8353913 Con
and is a CON of 13/108,982 05/16/2011 PAT 9005293
and said 13/210,157 08/15/2011
is a CON of 13/084,543 04/11/2011 PAT 8353913
and is a CON of 13/108,982 05/16/2011 PAT 9005293
and said 13/210,168 08/15/2011
and said 13/210,162 08/15/2011
is a CON of 13/084,543 04/11/2011 PAT 8353913
and is a CON of 13/108,982 05/16/2011 PAT 9005293

is a CON of 13/084,543 04/11/2011 PAT 8353913
and is a CON of 13/108,982 05/16/2011 PAT 9005293
and said 13/741,361 01/14/2013
is a CON of 13/084,543 04/11/2011 PAT 8353913
and is a CON of 13/108,982 05/16/2011 PAT 9005293
and said 13/084,543 04/11/2011
is a CON of 11/842,855 08/21/2007 PAT 7942903
and said 13/108,982 05/16/2011
is a CON of 11/842,855 08/21/2007 PAT 7942903
which is a CON of 11/536,815 09/29/2006 PAT 7846188
which is a CIP of 11/208,644 08/23/2005 PAT 7704279
which claims benefit of 60/670,231 04/12/2005

Foreign Applications for which priority is claimed (You may be eligible to benefit from the **Patent Prosecution Highway** program at the USPTO. Please see http://www.uspto.gov for more information.) - None.
Foreign application information must be provided in an Application Data Sheet in order to constitute a claim to foreign priority. See 37 CFR 1.55 and 1.76.

Permission to Access Application via Priority Document Exchange: Yes

Permission to Access Search Results: Yes

Applicant may provide or rescind an authorization for access using Form PTO/SB/39 or Form PTO/SB/69 as appropriate.

If Required, Foreign Filing License Granted: 12/11/2017

The country code and number of your priority application, to be used for filing abroad under the Paris Convention, is **US 15/820,232**

Projected Publication Date: Not Applicable

Non-Publication Request: No

Early Publication Request: No
** **SMALL ENTITY** **
Title

ZERO-PROFILE EXPANDABLE INTERVERTEBRAL SPACER DEVICES FOR DISTRACTION AND SPINAL FUSION AND A UNIVERSAL TOOL FOR THEIR PLACEMENT AND EXPANSION

Preliminary Class

623

Statement under 37 CFR 1.55 or 1.78 for AIA (First Inventor to File) Transition Applications: No

PROTECTING YOUR INVENTION OUTSIDE THE UNITED STATES

Since the rights granted by a U.S. patent extend only throughout the territory of the United States and have no effect in a foreign country, an inventor who wishes patent protection in another country must apply for a patent in a specific country or in regional patent offices. Applicants may wish to consider the filing of an international application under the Patent Cooperation Treaty (PCT). An international (PCT) application generally has the same effect as a regular national patent application in each PCT-member country. The PCT process **simplifies** the filing of patent applications on the same invention in member countries, but **does not result** in a grant of "an international

patent" and does not eliminate the need of applicants to file additional documents and fees in countries where patent protection is desired.

Almost every country has its own patent law, and a person desiring a patent in a particular country must make an application for patent in that country in accordance with its particular laws. Since the laws of many countries differ in various respects from the patent law of the United States, applicants are advised to seek guidance from specific foreign countries to ensure that patent rights are not lost prematurely.

Applicants also are advised that in the case of inventions made in the United States, the Director of the USPTO must issue a license before applicants can apply for a patent in a foreign country. The filing of a U.S. patent application serves as a request for a foreign filing license. The application's filing receipt contains further information and guidance as to the status of applicant's license for foreign filing.

Applicants may wish to consult the USPTO booklet, "General Information Concerning Patents" (specifically, the section entitled "Treaties and Foreign Patents") for more information on timeframes and deadlines for filing foreign patent applications. The guide is available either by contacting the USPTO Contact Center at 800-786-9199, or it can be viewed on the USPTO website at http://www.uspto.gov/web/offices/pac/doc/general/index.html.

For information on preventing theft of your intellectual property (patents, trademarks and copyrights), you may wish to consult the U.S. Government website, http://www.stopfakes.gov. Part of a Department of Commerce initiative, this website includes self-help "toolkits" giving innovators guidance on how to protect intellectual property in specific countries such as China, Korea and Mexico. For questions regarding patent enforcement issues, applicants may call the U.S. Government hotline at 1-866-999-HALT (1-866-999-4258).

LICENSE FOR FOREIGN FILING UNDER

Title 35, United States Code, Section 184

Title 37, Code of Federal Regulations, 5.11 & 5.15

GRANTED

The applicant has been granted a license under 35 U.S.C. 184, if the phrase "IF REQUIRED, FOREIGN FILING LICENSE GRANTED" followed by a date appears on this form. Such licenses are issued in all applications where the conditions for issuance of a license have been met, regardless of whether or not a license may be required as set forth in 37 CFR 5.15. The scope and limitations of this license are set forth in 37 CFR 5.15(a) unless an earlier license has been issued under 37 CFR 5.15(b). The license is subject to revocation upon written notification. The date indicated is the effective date of the license, unless an earlier license of similar scope has been granted under 37 CFR 5.13 or 5.14.

This license is to be retained by the licensee and may be used at any time on or after the effective date thereof unless it is revoked. This license is automatically transferred to any related applications(s) filed under 37 CFR 1.53(d). This license is not retroactive.

The grant of a license does not in any way lessen the responsibility of a licensee for the security of the subject matter as imposed by any Government contract or the provisions of existing laws relating to espionage and the national security or the export of technical data. Licensees should apprise themselves of current regulations especially with respect to certain countries, of other agencies, particularly the Office of Defense Trade Controls, Department of State (with respect to Arms, Munitions and Implements of War (22 CFR 121-128)); the Bureau of Industry and

Security, Department of Commerce (15 CFR parts 730-774); the Office of Foreign AssetsControl, Department of Treasury (31 CFR Parts 500+) and the Department of Energy.

NOT GRANTED

No license under 35 U.S.C. 184 has been granted at this time, if the phrase "IF REQUIRED, FOREIGN FILING LICENSE GRANTED" DOES NOT appear on this form. Applicant may still petition for a license under 37 CFR 5.12, if a license is desired before the expiration of 6 months from the filing date of the application. If 6 months has lapsed from the filing date of this application and the licensee has not received any indication of a secrecy order under 35 U.S.C. 181, the licensee may foreign file the application pursuant to 37 CFR 5.15(b).

SelectUSA

The United States represents the largest, most dynamic marketplace in the world and is an unparalleled location for business investment, innovation, and commercialization of new technologies. The U.S. offers tremendous resources and advantages for those who invest and manufacture goods here. Through SelectUSA, our nation works to promote and facilitate business investment. SelectUSA provides information assistance to the international investor community; serves as an ombudsman for existing and potential investors; advocates on behalf of U.S. cities, states, and regions competing for global investment; and counsels U.S. economic development organizations on investment attraction best practices. To learn more about why the United States is the best country in the world to develop technology, manufacture products, deliver services, and grow your business, visit http://www.SelectUSA.gov or call +1-202-482-6800.

Electronic Acknowledgement Receipt

EFS ID:	32280940
Application Number:	15820232
International Application Number:	
Confirmation Number:	1007
Title of Invention:	ZERO-PROFILE EXPANDABLE INTERVERTEBRAL SPACER DEVICES FOR DISTRACTION AND SPINAL FUSION AND A UNIVERSAL TOOL FOR THEIR PLACEMENT AND EXPANSION
First Named Inventor/Applicant Name:	Ahmnon D. Moskowitz
Customer Number:	26191
Filer:	Stuart A. Nelson/Abby Remer
Filer Authorized By:	Stuart A. Nelson
Attorney Docket Number:	46440-0020002
Receipt Date:	09-APR-2018
Filing Date:	21-NOV-2017
Time Stamp:	14:10:28
Application Type:	Utility under 35 USC 111(a)

Payment information:

Submitted with Payment	no

File Listing:

Document Number	Document Description	File Name	File Size(Bytes)/ Message Digest	Multi Part /.zip	Pages (if appl.)
1	Request for Corrected Filing Receipt	Request.pdf	565317 827934b14b4153c6c03a968b29df388557fcf844	no	5

Warnings:

Information:	
Total Files Size (in bytes):	565317

This Acknowledgement Receipt evidences receipt on the noted date by the USPTO of the indicated documents, characterized by the applicant, and including page counts, where applicable. It serves as evidence of receipt similar to a Post Card, as described in MPEP 503.

New Applications Under 35 U.S.C. 111
If a new application is being filed and the application includes the necessary components for a filing date (see 37 CFR 1.53(b)-(d) and MPEP 506), a Filing Receipt (37 CFR 1.54) will be issued in due course and the date shown on this Acknowledgement Receipt will establish the filing date of the application.
National Stage of an International Application under 35 U.S.C. 371
If a timely submission to enter the national stage of an international application is compliant with the conditions of 35 U.S.C. 371 and other applicable requirements a Form PCT/DO/EO/903 indicating acceptance of the application as a national stage submission under 35 U.S.C. 371 will be issued in addition to the Filing Receipt, in due course.
New International Application Filed with the USPTO as a Receiving Office
If a new international application is being filed and the international application includes the necessary components for an international filing date (see PCT Article 11 and MPEP 1810), a Notification of the International Application Number and of the International Filing Date (Form PCT/RO/105) will be issued in due course, subject to prescriptions concerning national security, and the date shown on this Acknowledgement Receipt will establish the international filing date of the application.

UNITED STATES PATENT AND TRADEMARK OFFICE

UNITED STATES DEPARTMENT OF COMMERCE
United States Patent and Trademark Office
Address: COMMISSIONER FOR PATENTS
P.O. Box 1450
Alexandria, Virginia 22313-1450
www.uspto.gov

APPLICATION NUMBER	FILING or 371(c) DATE	GRP ART UNIT	FIL FEE REC'D	ATTY.DOCKET.NO	TOT CLAIMS	IND CLAIMS
15/820,232	11/21/2017	3733	730	46440-0020002	20	3

CONFIRMATION NO. 1007

CORRECTED FILING RECEIPT

26191
FISH & RICHARDSON P.C. (TC)
PO BOX 1022
MINNEAPOLIS, MN 55440-1022

OC000000098710372

Date Mailed: 04/12/2018

Receipt is acknowledged of this non-provisional patent application. The application will be taken up for examination in due course. Applicant will be notified as to the results of the examination. Any correspondence concerning the application must include the following identification information: the U.S. APPLICATION NUMBER, FILING DATE, NAME OF APPLICANT, and TITLE OF INVENTION. Fees transmitted by check or draft are subject to collection. Please verify the accuracy of the data presented on this receipt. **If an error is noted on this Filing Receipt, please submit a written request for a Filing Receipt Correction. Please provide a copy of this Filing Receipt with the changes noted thereon. If you received a "Notice to File Missing Parts" for this application, please submit any corrections to this Filing Receipt with your reply to the Notice. When the USPTO processes the reply to the Notice, the USPTO will generate another Filing Receipt incorporating the requested corrections**

Inventor(s)

Ahmnon D. Moskowitz, Rockville, MD;
Mosheh T. Moskowitz, Rockville, MD;
Pablo A. Valdivia Y. Alvarado, Cambridge, MA;
Eric Sugalski, Arlington, MA;
Nathan C. Moskowitz, Rockville, MD;

Applicant(s)

Nathan C. Moskowitz, Rockville, MD;

Power of Attorney: The patent practitioners associated with Customer Number 26191

Domestic Priority data as claimed by applicant

This application is a CON of 14/063,197 10/25/2013 PAT 9848993
which is a CIP of 13/210,150 08/15/2011 PAT 9867719
and is a CIP of 13/210,157 08/15/2011 PAT 9889022
and is a CIP of 13/210,162 08/15/2011 PAT 9895238
and is a CIP of 13/210,168 08/15/2011 PAT 9907674
and is a CIP of 13/741,361 01/14/2013 PAT 9301854
and claims benefit of 61/801,783 03/15/2013
and claims benefit of 61/718,707 10/25/2012
and said 13/210,150 08/15/2011
is a CON of 13/084,543 04/11/2011 PAT 8353913
and is a CON of 13/108,982 05/16/2011 PAT 9005293
and said 13/210,157 08/15/2011
is a CON of 13/084,543 04/11/2011 PAT 8353913
and is a CON of 13/108,982 05/16/2011 PAT 9005293
and said 13/210,162 08/15/2011

is a CON of 13/084,543 04/11/2011 PAT 8353913
and is a CON of 13/108,982 05/16/2011 PAT 9005293
and said 13/741,361 01/14/2013
is a CON of 13/084,543 04/11/2011 PAT 8353913
and is a CON of 13/108,982 05/16/2011 PAT 9005293
and said 13/084,543 04/11/2011
is a CON of 11/842,855 08/21/2007 PAT 7942903
and said 13/108,982 05/16/2011
is a CON of 11/842,855 08/21/2007 PAT 7942903
which is a CON of 11/536,815 09/29/2006 PAT 7846188
which is a CIP of 11/208,644 08/23/2005 PAT 7704279
which claims benefit of 60/670,231 04/12/2005

Foreign Applications for which priority is claimed (You may be eligible to benefit from the **Patent Prosecution Highway** program at the USPTO. Please see http://www.uspto.gov for more information.) - None.
Foreign application information must be provided in an Application Data Sheet in order to constitute a claim to foreign priority. See 37 CFR 1.55 and 1.76.

Permission to Access Application via Priority Document Exchange: Yes

Permission to Access Search Results: Yes

Applicant may provide or rescind an authorization for access using Form PTO/SB/39 or Form PTO/SB/69 as appropriate.

If Required, Foreign Filing License Granted: 12/11/2017

The country code and number of your priority application, to be used for filing abroad under the Paris Convention, is **US 15/820,232**

Projected Publication Date: Not Applicable

Non-Publication Request: No

Early Publication Request: No
** **SMALL ENTITY** **
Title

ZERO-PROFILE EXPANDABLE INTERVERTEBRAL SPACER DEVICES FOR DISTRACTION AND SPINAL FUSION AND A UNIVERSAL TOOL FOR THEIR PLACEMENT AND EXPANSION

Preliminary Class

623

Statement under 37 CFR 1.55 or 1.78 for AIA (First Inventor to File) Transition Applications: No

PROTECTING YOUR INVENTION OUTSIDE THE UNITED STATES

Since the rights granted by a U.S. patent extend only throughout the territory of the United States and have no effect in a foreign country, an inventor who wishes patent protection in another country must apply for a patent in a specific country or in regional patent offices. Applicants may wish to consider the filing of an international application under the Patent Cooperation Treaty (PCT). An international (PCT) application generally has the same effect as a regular national patent application in each PCT-member country. The PCT process **simplifies** the filing of patent applications on the same invention in member countries, but **does not result** in a grant of "an international

patent" and does not eliminate the need of applicants to file additional documents and fees in countries where patent protection is desired.

Almost every country has its own patent law, and a person desiring a patent in a particular country must make an application for patent in that country in accordance with its particular laws. Since the laws of many countries differ in various respects from the patent law of the United States, applicants are advised to seek guidance from specific foreign countries to ensure that patent rights are not lost prematurely.

Applicants also are advised that in the case of inventions made in the United States, the Director of the USPTO must issue a license before applicants can apply for a patent in a foreign country. The filing of a U.S. patent application serves as a request for a foreign filing license. The application's filing receipt contains further information and guidance as to the status of applicant's license for foreign filing.

Applicants may wish to consult the USPTO booklet, "General Information Concerning Patents" (specifically, the section entitled "Treaties and Foreign Patents") for more information on timeframes and deadlines for filing foreign patent applications. The guide is available either by contacting the USPTO Contact Center at 800-786-9199, or it can be viewed on the USPTO website at http://www.uspto.gov/web/offices/pac/doc/general/index.html.

For information on preventing theft of your intellectual property (patents, trademarks and copyrights), you may wish to consult the U.S. Government website, http://www.stopfakes.gov. Part of a Department of Commerce initiative, this website includes self-help "toolkits" giving innovators guidance on how to protect intellectual property in specific countries such as China, Korea and Mexico. For questions regarding patent enforcement issues, applicants may call the U.S. Government hotline at 1-866-999-HALT (1-866-999-4258).

LICENSE FOR FOREIGN FILING UNDER

Title 35, United States Code, Section 184

Title 37, Code of Federal Regulations, 5.11 & 5.15

GRANTED

The applicant has been granted a license under 35 U.S.C. 184, if the phrase "IF REQUIRED, FOREIGN FILING LICENSE GRANTED" followed by a date appears on this form. Such licenses are issued in all applications where the conditions for issuance of a license have been met, regardless of whether or not a license may be required as set forth in 37 CFR 5.15. The scope and limitations of this license are set forth in 37 CFR 5.15(a) unless an earlier license has been issued under 37 CFR 5.15(b). The license is subject to revocation upon written notification. The date indicated is the effective date of the license, unless an earlier license of similar scope has been granted under 37 CFR 5.13 or 5.14.

This license is to be retained by the licensee and may be used at any time on or after the effective date thereof unless it is revoked. This license is automatically transferred to any related applications(s) filed under 37 CFR 1.53(d). This license is not retroactive.

The grant of a license does not in any way lessen the responsibility of a licensee for the security of the subject matter as imposed by any Government contract or the provisions of existing laws relating to espionage and the national security or the export of technical data. Licensees should apprise themselves of current regulations especially with respect to certain countries, of other agencies, particularly the Office of Defense Trade Controls, Department of State (with respect to Arms, Munitions and Implements of War (22 CFR 121-128)); the Bureau of Industry and

Security, Department of Commerce (15 CFR parts 730-774); the Office of Foreign AssetsControl, Department of Treasury (31 CFR Parts 500+) and the Department of Energy.

NOT GRANTED

No license under 35 U.S.C. 184 has been granted at this time, if the phrase "IF REQUIRED, FOREIGN FILING LICENSE GRANTED" DOES NOT appear on this form. Applicant may still petition for a license under 37 CFR 5.12, if a license is desired before the expiration of 6 months from the filing date of the application. If 6 months has lapsed from the filing date of this application and the licensee has not received any indication of a secrecy order under 35 U.S.C. 181, the licensee may foreign file the application pursuant to 37 CFR 5.15(b).

SelectUSA

The United States represents the largest, most dynamic marketplace in the world and is an unparalleled location for business investment, innovation, and commercialization of new technologies. The U.S. offers tremendous resources and advantages for those who invest and manufacture goods here. Through SelectUSA, our nation works to promote and facilitate business investment. SelectUSA provides information assistance to the international investor community; serves as an ombudsman for existing and potential investors; advocates on behalf of U.S. cities, states, and regions competing for global investment; and counsels U.S. economic development organizations on investment attraction best practices. To learn more about why the United States is the best country in the world to develop technology, manufacture products, deliver services, and grow your business, visit http://www.SelectUSA.gov or call +1-202-482-6800.

UNITED STATES PATENT AND TRADEMARK OFFICE

UNITED STATES DEPARTMENT OF COMMERCE
United States Patent and Trademark Office
Address: COMMISSIONER FOR PATENTS
P.O. Box 1450
Alexandria, Virginia 22313-1450
www.uspto.gov

NOTICE OF ALLOWANCE AND FEE(S) DUE

26191 7590 05/22/2018
FISH & RICHARDSON P.C. (TC)
PO BOX 1022
MINNEAPOLIS, MN 55440-1022

EXAMINER
PHILOGENE, PEDRO

ART UNIT	PAPER NUMBER
3733	

DATE MAILED: 05/22/2018

APPLICATION NO.	FILING DATE	FIRST NAMED INVENTOR	ATTORNEY DOCKET NO.	CONFIRMATION NO.
15/820,232	11/21/2017	Ahmnon D. Moskowitz	46440-0020002	1007

TITLE OF INVENTION: ZERO-PROFILE EXPANDABLE INTERVERTEBRAL SPACER DEVICES FOR DISTRACTION AND SPINAL FUSION AND A UNIVERSAL TOOL FOR THEIR PLACEMENT AND EXPANSION

APPLN. TYPE	ENTITY STATUS	ISSUE FEE DUE	PUBLICATION FEE DUE	PREV. PAID ISSUE FEE	TOTAL FEE(S) DUE	DATE DUE
nonprovisional	SMALL	$500	$0	$0	$500	08/22/2018

THE APPLICATION IDENTIFIED ABOVE HAS BEEN EXAMINED AND IS ALLOWED FOR ISSUANCE AS A PATENT. PROSECUTION ON THE MERITS IS CLOSED. THIS NOTICE OF ALLOWANCE IS NOT A GRANT OF PATENT RIGHTS. THIS APPLICATION IS SUBJECT TO WITHDRAWAL FROM ISSUE AT THE INITIATIVE OF THE OFFICE OR UPON PETITION BY THE APPLICANT. SEE 37 CFR 1.313 AND MPEP 1308.

THE ISSUE FEE AND PUBLICATION FEE (IF REQUIRED) MUST BE PAID WITHIN THREE MONTHS FROM THE MAILING DATE OF THIS NOTICE OR THIS APPLICATION SHALL BE REGARDED AS ABANDONED. THIS STATUTORY PERIOD CANNOT BE EXTENDED. SEE 35 U.S.C. 151. THE ISSUE FEE DUE INDICATED ABOVE DOES NOT REFLECT A CREDIT FOR ANY PREVIOUSLY PAID ISSUE FEE IN THIS APPLICATION. IF AN ISSUE FEE HAS PREVIOUSLY BEEN PAID IN THIS APPLICATION (AS SHOWN ABOVE), THE RETURN OF PART B OF THIS FORM WILL BE CONSIDERED A REQUEST TO REAPPLY THE PREVIOUSLY PAID ISSUE FEE TOWARD THE ISSUE FEE NOW DUE.

HOW TO REPLY TO THIS NOTICE:

I. Review the ENTITY STATUS shown above. If the ENTITY STATUS is shown as SMALL or MICRO, verify whether entitlement to that entity status still applies.

If the ENTITY STATUS is the same as shown above, pay the TOTAL FEE(S) DUE shown above.

If the ENTITY STATUS is changed from that shown above, on PART B - FEE(S) TRANSMITTAL, complete section number 5 titled "Change in Entity Status (from status indicated above)".

For purposes of this notice, small entity fees are 1/2 the amount of undiscounted fees, and micro entity fees are 1/2 the amount of small entity fees.

II. PART B - FEE(S) TRANSMITTAL, or its equivalent, must be completed and returned to the United States Patent and Trademark Office (USPTO) with your ISSUE FEE and PUBLICATION FEE (if required). If you are charging the fee(s) to your deposit account, section "4b" of Part B - Fee(s) Transmittal should be completed and an extra copy of the form should be submitted. If an equivalent of Part B is filed, a request to reapply a previously paid issue fee must be clearly made, and delays in processing may occur due to the difficulty in recognizing the paper as an equivalent of Part B.

III. All communications regarding this application must give the application number. Please direct all communications prior to issuance to Mail Stop ISSUE FEE unless advised to the contrary.

IMPORTANT REMINDER: Maintenance fees are due in utility patents issuing on applications filed on or after Dec. 12, 1980. It is patentee's responsibility to ensure timely payment of maintenance fees when due. More information is available at www.uspto.gov/PatentMaintenanceFees.

PART B - FEE(S) TRANSMITTAL

Complete and send this form, together with applicable fee(s), to: Mail **Mail Stop ISSUE FEE**
Commissioner for Patents
P.O. Box 1450
Alexandria, Virginia 22313-1450
or Fax (571)-273-2885

INSTRUCTIONS: This form should be used for transmitting the ISSUE FEE and PUBLICATION FEE (if required). Blocks 1 through 5 should be completed where appropriate. All further correspondence including the Patent, advance orders and notification of maintenance fees will be mailed to the current correspondence address as indicated unless corrected below or directed otherwise in Block 1, by (a) specifying a new correspondence address; and/or (b) indicating a separate "FEE ADDRESS" for maintenance fee notifications.

CURRENT CORRESPONDENCE ADDRESS (Note: Use Block 1 for any change of address)

26191 7590 05/22/2018
FISH & RICHARDSON P.C. (TC)
PO BOX 1022
MINNEAPOLIS, MN 55440-1022

Note: A certificate of mailing can only be used for domestic mailings of the Fee(s) Transmittal. This certificate cannot be used for any other accompanying papers. Each additional paper, such as an assignment or formal drawing, must have its own certificate of mailing or transmission.

Certificate of Mailing or Transmission

I hereby certify that this Fee(s) Transmittal is being deposited with the United States Postal Service with sufficient postage for first class mail in an envelope addressed to the Mail Stop ISSUE FEE address above, or being facsimile transmitted to the USPTO (571) 273-2885, on the date indicated below.

(Depositor's name)
(Signature)
(Date)

APPLICATION NO.	FILING DATE	FIRST NAMED INVENTOR	ATTORNEY DOCKET NO.	CONFIRMATION NO.
15/820,232	11/21/2017	Ahmnon D. Moskowitz	46440-0020002	1007

TITLE OF INVENTION: ZERO-PROFILE EXPANDABLE INTERVERTEBRAL SPACER DEVICES FOR DISTRACTION AND SPINAL FUSION AND A UNIVERSAL TOOL FOR THEIR PLACEMENT AND EXPANSION

APPLN. TYPE	ENTITY STATUS	ISSUE FEE DUE	PUBLICATION FEE DUE	PREV. PAID ISSUE FEE	TOTAL FEE(S) DUE	DATE DUE
nonprovisional	SMALL	$500	$0	$0	$500	08/22/2018

EXAMINER	ART UNIT	CLASS-SUBCLASS
PHILOGENE, PEDRO	3733	623-017150

1. Change of correspondence address or indication of "Fee Address" (37 CFR 1.363).

❑ Change of correspondence address (or Change of Correspondence Address form PTO/SB/122) attached.

❑ "Fee Address" indication (or "Fee Address" Indication form PTO/SB/47; Rev 03-02 or more recent) attached. **Use of a Customer Number is required.**

2. For printing on the patent front page, list

(1) The names of up to 3 registered patent attorneys or agents OR, alternatively,

(2) The name of a single firm (having as a member a registered attorney or agent) and the names of up to 2 registered patent attorneys or agents. If no name is listed, no name will be printed.

1_____
2_____
3_____

3. ASSIGNEE NAME AND RESIDENCE DATA TO BE PRINTED ON THE PATENT (print or type)

PLEASE NOTE: Unless an assignee is identified below, no assignee data will appear on the patent. If an assignee is identified below, the document has been filed for recordation as set forth in 37 CFR 3.11. Completion of this form is NOT a substitute for filing an assignment.

(A) NAME OF ASSIGNEE (B) RESIDENCE: (CITY and STATE OR COUNTRY)

Please check the appropriate assignee category or categories (will not be printed on the patent) : ❑ Individual ❑ Corporation or other private group entity ❑ Government

4a. The following fee(s) are submitted:

❑ Issue Fee
❑ Publication Fee (No small entity discount permitted)
❑ Advance Order - # of Copies _____

4b. Payment of Fee(s): **(Please first reapply any previously paid issue fee shown above)**

❑ A check is enclosed.
❑ Payment by credit card. Form PTO-2038 is attached.
❑ The director is hereby authorized to charge the required fee(s), any deficiency, or credits any overpayment, to Deposit Account Number _____ (enclose an extra copy of this form).

5. **Change in Entity Status** (from status indicated above)

❑ Applicant certifying micro entity status. See 37 CFR 1.29 — NOTE: Absent a valid certification of Micro Entity Status (see forms PTO/SB/15A and 15B), issue fee payment in the micro entity amount will not be accepted at the risk of application abandonment.

❑ Applicant asserting small entity status. See 37 CFR 1.27 — NOTE: If the application was previously under micro entity status, checking this box will be taken to be a notification of loss of entitlement to micro entity status.

❑ Applicant changing to regular undiscounted fee status. — NOTE: Checking this box will be taken to be a notification of loss of entitlement to small or micro entity status, as applicable.

NOTE: This form must be signed in accordance with 37 CFR 1.31 and 1.33. See 37 CFR 1.4 for signature requirements and certifications.

Authorized Signature _____ Date _____

Typed or printed name _____ Registration No. _____

PTOL-85 Part B (10-13) Approved for use through 10/31/2013. OMB 0651-0033 U.S. Patent and Trademark Office; U.S. DEPARTMENT OF COMMERCE

UNITED STATES PATENT AND TRADEMARK OFFICE

UNITED STATES DEPARTMENT OF COMMERCE
United States Patent and Trademark Office
Address: COMMISSIONER FOR PATENTS
P.O. Box 1450
Alexandria, Virginia 22313-1450
www.uspto.gov

APPLICATION NO.	FILING DATE	FIRST NAMED INVENTOR	ATTORNEY DOCKET NO.	CONFIRMATION NO.
15/820,232	11/21/2017	Ahmnon D. Moskowitz	46440-0020002	1007

26191 7590 05/22/2018
FISH & RICHARDSON P.C. (TC)
PO BOX 1022
MINNEAPOLIS, MN 55440-1022

EXAMINER
PHILOGENE, PEDRO

ART UNIT	PAPER NUMBER
3733	

DATE MAILED: 05/22/2018

Determination of Patent Term Adjustment under 35 U.S.C. 154 (b)
(Applications filed on or after May 29, 2000)

The Office has discontinued providing a Patent Term Adjustment (PTA) calculation with the Notice of Allowance.

Section 1(h)(2) of the AIA Technical Corrections Act amended 35 U.S.C. 154(b)(3)(B)(i) to eliminate the requirement that the Office provide a patent term adjustment determination with the notice of allowance. See Revisions to Patent Term Adjustment, 78 Fed. Reg. 19416, 19417 (Apr. 1, 2013). Therefore, the Office is no longer providing an initial patent term adjustment determination with the notice of allowance. The Office will continue to provide a patent term adjustment determination with the Issue Notification Letter that is mailed to applicant approximately three weeks prior to the issue date of the patent, and will include the patent term adjustment on the patent. Any request for reconsideration of the patent term adjustment determination (or reinstatement of patent term adjustment) should follow the process outlined in 37 CFR 1.705.

Any questions regarding the Patent Term Extension or Adjustment determination should be directed to the Office of Patent Legal Administration at (571)-272-7702. Questions relating to issue and publication fee payments should be directed to the Customer Service Center of the Office of Patent Publication at 1-(888)-786-0101 or (571)-272-4200.

OMB Clearance and PRA Burden Statement for PTOL-85 Part B

The Paperwork Reduction Act (PRA) of 1995 requires Federal agencies to obtain Office of Management and Budget approval before requesting most types of information from the public. When OMB approves an agency request to collect information from the public, OMB (i) provides a valid OMB Control Number and expiration date for the agency to display on the instrument that will be used to collect the information and (ii) requires the agency to inform the public about the OMB Control Number's legal significance in accordance with 5 CFR 1320.5(b).

The information collected by PTOL-85 Part B is required by 37 CFR 1.311. The information is required to obtain or retain a benefit by the public which is to file (and by the USPTO to process) an application. Confidentiality is governed by 35 U.S.C. 122 and 37 CFR 1.14. This collection is estimated to take 12 minutes to complete, including gathering, preparing, and submitting the completed application form to the USPTO. Time will vary depending upon the individual case. Any comments on the amount of time you require to complete this form and/or suggestions for reducing this burden, should be sent to the Chief Information Officer, U.S. Patent and Trademark Office, U.S. Department of Commerce, P.O. Box 1450, Alexandria, Virginia 22313-1450. DO NOT SEND FEES OR COMPLETED FORMS TO THIS ADDRESS. SEND TO: Commissioner for Patents, P.O. Box 1450, Alexandria, Virginia 22313-1450. Under the Paperwork Reduction Act of 1995, no persons are required to respond to a collection of information unless it displays a valid OMB control number.

Privacy Act Statement

The Privacy Act of 1974 (P.L. 93-579) requires that you be given certain information in connection with your submission of the attached form related to a patent application or patent. Accordingly, pursuant to the requirements of the Act, please be advised that: (1) the general authority for the collection of this information is 35 U.S.C. 2(b)(2); (2) furnishing of the information solicited is voluntary; and (3) the principal purpose for which the information is used by the U.S. Patent and Trademark Office is to process and/or examine your submission related to a patent application or patent. If you do not furnish the requested information, the U.S. Patent and Trademark Office may not be able to process and/or examine your submission, which may result in termination of proceedings or abandonment of the application or expiration of the patent.

The information provided by you in this form will be subject to the following routine uses:

1. The information on this form will be treated confidentially to the extent allowed under the Freedom of Information Act (5 U.S.C. 552) and the Privacy Act (5 U.S.C 552a). Records from this system of records may be disclosed to the Department of Justice to determine whether disclosure of these records is required by the Freedom of Information Act.
2. A record from this system of records may be disclosed, as a routine use, in the course of presenting evidence to a court, magistrate, or administrative tribunal, including disclosures to opposing counsel in the course of settlement negotiations.
3. A record in this system of records may be disclosed, as a routine use, to a Member of Congress submitting a request involving an individual, to whom the record pertains, when the individual has requested assistance from the Member with respect to the subject matter of the record.
4. A record in this system of records may be disclosed, as a routine use, to a contractor of the Agency having need for the information in order to perform a contract. Recipients of information shall be required to comply with the requirements of the Privacy Act of 1974, as amended, pursuant to 5 U.S.C. 552a(m).
5. A record related to an International Application filed under the Patent Cooperation Treaty in this system of records may be disclosed, as a routine use, to the International Bureau of the World Intellectual Property Organization, pursuant to the Patent Cooperation Treaty.
6. A record in this system of records may be disclosed, as a routine use, to another federal agency for purposes of National Security review (35 U.S.C. 181) and for review pursuant to the Atomic Energy Act (42 U.S.C. 218(c)).
7. A record from this system of records may be disclosed, as a routine use, to the Administrator, General Services, or his/her designee, during an inspection of records conducted by GSA as part of that agency's responsibility to recommend improvements in records management practices and programs, under authority of 44 U.S.C. 2904 and 2906. Such disclosure shall be made in accordance with the GSA regulations governing inspection of records for this purpose, and any other relevant (i.e., GSA or Commerce) directive. Such disclosure shall not be used to make determinations about individuals.
8. A record from this system of records may be disclosed, as a routine use, to the public after either publication of the application pursuant to 35 U.S.C. 122(b) or issuance of a patent pursuant to 35 U.S.C. 151. Further, a record may be disclosed, subject to the limitations of 37 CFR 1.14, as a routine use, to the public if the record was filed in an application which became abandoned or in which the proceedings were terminated and which application is referenced by either a published application, an application open to public inspection or an issued patent.
9. A record from this system of records may be disclosed, as a routine use, to a Federal, State, or local law enforcement agency, if the USPTO becomes aware of a violation or potential violation of law or regulation.

Notice of Allowability	Application No. 15/820,232	Applicant(s) MOSKOWITZ ET AL.	
	Examiner PEDRO PHILOGENE	Art Unit 3733	AIA (First Inventor to File) Status No

-- The MAILING DATE of this communication appears on the cover sheet with the correspondence address--

All claims being allowable, PROSECUTION ON THE MERITS IS (OR REMAINS) CLOSED in this application. If not included herewith (or previously mailed), a Notice of Allowance (PTOL-85) or other appropriate communication will be mailed in due course. **THIS NOTICE OF ALLOWABILITY IS NOT A GRANT OF PATENT RIGHTS.** This application is subject to withdrawal from issue at the initiative of the Office or upon petition by the applicant. See 37 CFR 1.313 and MPEP 1308.

1. ☒ This communication is responsive to *applicant's amendment filed 2/6/18*.
   ☐ A declaration(s)/affidavit(s) under **37 CFR 1.130(b)** was/were filed on_____.
2. ☐ An election was made by the applicant in response to a restriction requirement set forth during the interview on _____; the restriction requirement and election have been incorporated into this action.
3. ☒ The allowed claim(s) is/are *2-21*. As a result of the allowed claim(s), you may be eligible to benefit from the **Patent Prosecution Highway** program at a participating intellectual property office for the corresponding application. For more information, please see http://www.uspto.gov/patents/init_events/pph/index.jsp or send an inquiry to PPHfeedback@uspto.gov.
4. ☐ Acknowledgment is made of a claim for foreign priority under 35 U.S.C. § 119(a)-(d) or (f).

   Certified copies:

   a) ☐ All b) ☐ Some *c) ☐ None of the:
   1. ☐ Certified copies of the priority documents have been received.
   2. ☐ Certified copies of the priority documents have been received in Application No. _____ .
   3. ☐ Copies of the certified copies of the priority documents have been received in this national stage application from the International Bureau (PCT Rule 17.2(a)).

   * Certified copies not received: _____.

Applicant has THREE MONTHS FROM THE "MAILING DATE" of this communication to file a reply complying with the requirements noted below. Failure to timely comply will result in ABANDONMENT of this application.
THIS THREE-MONTH PERIOD IS NOT EXTENDABLE.

5. ☐ CORRECTED DRAWINGS (as "replacement sheets") must be submitted.
   ☐ including changes required by the attached Examiner's Amendment / Comment or in the Office action of Paper No./Mail Date _____.

   Identifying indicia such as the application number (see 37 CFR 1.84(c)) should be written on the drawings in the front (not the back) of each sheet. Replacement sheet(s) should be labeled as such in the header according to 37 CFR 1.121(d).
6. ☐ DEPOSIT OF and/or INFORMATION about the deposit of BIOLOGICAL MATERIAL must be submitted. Note the attached Examiner's comment regarding REQUIREMENT FOR THE DEPOSIT OF BIOLOGICAL MATERIAL.

Attachment(s)

1. ☐ Notice of References Cited (PTO-892)
2. ☐ Information Disclosure Statements (PTO/SB/08), Paper No./Mail Date _____
3. ☐ Examiner's Comment Regarding Requirement for Deposit of Biological Material
4. ☐ Interview Summary (PTO-413), Paper No./Mail Date _____ .
5. ☐ Examiner's Amendment/Comment
6. ☐ Examiner's Statement of Reasons for Allowance
7. ☐ Other _____.

/PEDRO PHILOGENE/
Primary Examiner, Art Unit 3733

Index of Claims	Application/Control No.	Applicant(s)/Patent Under Reexamination
	15820232	MOSKOWITZ ET AL.
	Examiner	**Art Unit**
	PEDRO PHILOGENE	3733

✓	Rejected	-	Cancelled	N	Non-Elected	A	Appeal
=	Allowed	÷	Restricted	I	Interference	O	Objected

☐ Claims renumbered in the same order as presented by applicant ☐ CPA ☐ T.D. ☐ R.1.47

CLAIM		DATE								
Final	Original	01/19/2018	05/04/2018							
	1	-	-							
1	2	✓	=							
2	3	✓	=							
3	4	✓	=							
4	5	✓	=							
5	6	✓	=							
6	7	✓	=							
7	8	✓	=							
8	9	✓	=							
9	10	✓	=							
10	11	✓	=							
11	12	✓	=							
12	13	✓	=							
13	14	✓	=							
14	15	✓	=							
15	16	✓	=							
16	17	✓	=							
17	18	✓	=							
18	19	✓	=							
19	20	✓	=							
20	21	✓	=							

Search Notes	Application/Control No.	Applicant(s)/Patent Under Reexamination
	15820232	MOSKOWITZ ET AL.
	Examiner	**Art Unit**
	PEDRO PHILOGENE	3733

CPC- SEARCHED		
Symbol	**Date**	**Examiner**
A61F2/447,4611; A61B17/0642,706486,8875	5/4/2018	/P.P./
A61F2002/2835,30261,30266,30281,30387,30448,30471,30497,30507,30525,30538,3055,30556,30579		
A61F2002/30604,30772,30878,4475,448,4627,4681,4687,		
A61F2220/0025,005; A61F2230/0015; A61F2250/0007		

CPC COMBINATION SETS - SEARCHED		
Symbol	**Date**	**Examiner**

US CLASSIFICATION SEARCHED			
Class	**Subclass**	**Date**	**Examiner**
623	17.11-17.16	5/4/2018	/P.P./
606	246-179,96,99		

* See search history printout included with this form or the SEARCH NOTES box below to determine the scope of the search.

SEARCH NOTES		
Search Notes	**Date**	**Examiner**
EAST search enclosed	5/4/2018	/P.P./

INTERFERENCE SEARCH			
US Class/ CPC Symbol	**US Subclass / CPC Group**	**Date**	**Examiner**
623	17.15	5/4/2018	/P.P./

	/PEDRO PHILOGENE/ Primary Examiner.Art Unit 3733

INTERFERENCE SEARCH			
US Class/ CPC Symbol	**US Subclass / CPC Group**	**Date**	**Examiner**
Interference search History Printout		5/4/2018	/P.P./

	/PEDRO PHILOGENE/ Primary Examiner.Art Unit 3733

EAST Search History

EAST Search History (Prior Art)

Ref #	Hits	Search Query	DBs	Default Operator	Plurals	Time Stamp
L1	1	"20180078383"	US-PGPUB; USPAT	OR	OFF	2018/05/04 12:58
L2	1	("9445919").PN.	USPAT; USOCR	OR	OFF	2018/05/04 13:00
L3	110	("20020068976" | "20020068977" | "20040010315" | "20040087947" | "20040249466" | "20050113916" | "20050113917" | "20060241643" | "20060241770" | "20060247778" | "20070270968" | "20080058938" | "20090112319" | "20090171461" | "20090292361" | "20090299478" | "20100057208" | "20100204795" | "20100286780" | "20100286783" | "20100292796" | "20110015742" | "20110029082" | "20110054621" | "20110093074" | "20110172721" | "20110172774" | "20120035729" | "20120109319" | "20120150304" | "20120150305" | "20120158146" | "20120158147" | "20120158148" | "20130144388" | "20130158664" | "20140121774" | "20140324171" | "5653763" | "5658336" | "5665122" | "5782832" | "5980522" | "6102950" | "6190414" | "6193757" | "6299642" | "6368351" | "6419705" | "6454807" | "6491724" | "6835206" | "6955691" | "7070598" | "7087055" | "7118579" | "7214243" | "7320555" | "7410501" | "7445636" | "7621960" | "7655027" | "7655046" | "7722674" | "7753958" | "7763078" | "7828849" | "7846185" | "7850733" | "7875078" | "7909869" | "8062375" | "8105358" | "8105382" | "8123810" | "8133232" | "8187332" | "8382842" | "8394145" | "8398713" | "8403990" | "8435298" | "8491659" | "8496706" | "8518120" | "8523944" | "8556979" | "8568481" | "8628577" | "8628578" | "8632595" | "8663329" | "8679183" | "8685095" | "8685098" | "8709086" | "8778025" | "8795366" | "8888853" | "8888854" | "8894711" | "8894712" | "8926704" | "8940049" | "9039771" | "9119730").PN. OR ("9445919").URPN.	US-PGPUB; USPAT; USOCR	OR	OFF	2018/05/04 13:00
L4	1	moskowitz near nathan.in. & expandable near interbody near device & wedge	US-PGPUB; USPAT; USOCR; FPRS; EPO; JPO;	OR	ON	2018/05/04 13:13

			DERWENT; IBM_TDB			
L5	1	moskowitz near ahmnon.in. & expandable near interbody near device & wedge	US-PGPUB; USPAT; USOCR; FPRS; EPO; JPO; DERWENT; IBM_TDB	OR	ON	2018/05/04 13:14
L6	1	moskowitz near mosheh.in. & expandable near interbody near device & wedge	US-PGPUB; USPAT; USOCR; FPRS; EPO; JPO; DERWENT; IBM_TDB	OR	ON	2018/05/04 13:14
L7	1	alvarado near pablo.in. & expandable near interbody near device & wedge	US-PGPUB; USPAT; USOCR; FPRS; EPO; JPO; DERWENT; IBM_TDB	OR	ON	2018/05/04 13:14
L8	1	sugalski near eric.in. & expandable near interbody near device & wedge	US-PGPUB; USPAT; USOCR; FPRS; EPO; JPO; DERWENT; IBM_TDB	OR	ON	2018/05/04 13:15
L9	1	sugalski near eric.in. & expandable near (interbody near device or spinal near implant) & wedge	US-PGPUB; USPAT; USOCR; FPRS; EPO; JPO; DERWENT; IBM_TDB	OR	ON	2018/05/04 13:17
L10	193	expandable near (interbody near device or spinal near implant) & wedge	US-PGPUB; USPAT; USOCR; FPRS; EPO; JPO; DERWENT; IBM_TDB	OR	ON	2018/05/04 13:17
L11	1	1 AND ((A61B17/0642 OR A61B17/7064 OR A61B17/86 OR A61B17/8875 OR A61B2017/0256 OR A61B2017/922 OR A61F2002/2835 OR A61F2002/30261 OR A61F2002/30266 OR A61F2002/30281 OR A61F2002/30387 OR A61F2002/30448 OR A61F2002/30471 OR A61F2002/30497 OR A61F2002/30507 OR A61F2002/30525 OR A61F2002/30538 OR A61F2002/3055 OR A61F2002/30556 OR A61F2002/30579 OR A61F2002/30604 OR A61F2002/30772 OR A61F2002/30878 OR A61F2002/4475 OR A61F2002/448 OR A61F2002/4627 OR A61F2002/4681 OR A61F2002/4687 OR A61F2220/0025 OR A61F2220/005 OR A61F2230/0015 OR A61F2250/0007 OR A61F2/447 OR A61F2/4611).CPC. OR (1/1 or 623/17.11-17.16 or 606/246-279).CCLS.	US-PGPUB; USPAT	OR	OFF	2018/05/04 13:19

		OR (A61B17/064 OR A61F2/44).IPCR.)				
L12	180	10 AND ((A61B17/0642 OR A61B17/7064 OR A61B17/86 OR A61B17/8875 OR A61B2017/0256 OR A61B2017/922 OR A61F2002/2835 OR A61F2002/30261 OR A61F2002/30266 OR A61F2002/30281 OR A61F2002/30387 OR A61F2002/30448 OR A61F2002/30471 OR A61F2002/30497 OR A61F2002/30507 OR A61F2002/30525 OR A61F2002/30538 OR A61F2002/3055 OR A61F2002/30556 OR A61F2002/30579 OR A61F2002/30604 OR A61F2002/30772 OR A61F2002/30878 OR A61F2002/4475 OR A61F2002/448 OR A61F2002/4627 OR A61F2002/4681 OR A61F2002/4687 OR A61F2220/0025 OR A61F2220/005 OR A61F2230/0015 OR A61F2250/0007 OR A61F2/447 OR A61F2/4611).CPC. OR (1/1 or 623/17.11-17.16 or 606/246-279).CCLS. OR (A61B17/064 OR A61F2/44).IPCR.)	US-PGPUB; USPAT	OR	OFF	2018/05/04 13:20
L13	0	expandable near (interbody near device or spinal near implant) & wedge & housing & hinge$4 & axially near aligned & pivot & slot & angled near wedge near surfce & slide & rotation near screw	US-PGPUB; USPAT; USOCR; FPRS; EPO; JPO; DERWENT; IBM_TDB	OR	ON	2018/05/04 13:40
L16	283	A61B017/064.ipc.	FPRS; EPO; JPO; DERWENT; IBM_TDB	OR	OFF	2018/05/04 13:42
L17	1694	A61F002/44.ipc.	FPRS; EPO; JPO; DERWENT; IBM_TDB	OR	OFF	2018/05/04 13:43

EAST Search History (Interference)

Ref #	Hits	Search Query	DBs	Default Operator	Plurals	Time Stamp
L14	0	expandable near (interbody near device or spinal near implant) & wedge & housing & hinge$4 & axially near aligned & pivot & slot & angled near wedge near surfce & slide & rotation near screw.clm.	USPAT	OR	ON	2018/05/04 13:41
L15	1225	(623/17.15).CCLS.	US-PGPUB; USPAT	OR	OFF	2018/05/04 13:41

5/4/2018 1:43:37 PM

Issue Classification	Application/Control No.	Applicant(s)/Patent Under Reexamination
	15820232	MOSKOWITZ ET AL.
	Examiner	**Art Unit**
	PEDRO PHILOGENE	3733

CPC						
Symbol					**Type**	**Version**
A61F		2	/	447	F	2013-01-01
A61F		2002	/	30556	A	2013-01-01
A61F		2002	/	30538	A	2013-01-01
A61F		2002	/	30525	A	2013-01-01
A61F		2002	/	30497	A	2013-01-01
A61F		2002	/	30471	A	2013-01-01
A61F		2002	/	30281	A	2013-01-01
A61F		2002	/	30266	A	2013-01-01
A61F		2002	/	30261	A	2013-01-01
A61B		2017	/	0256	A	2013-01-01
A61B		17	/	8875	A	2013-01-01
A61F		2250	/	0007	A	2013-01-01
A61F		2230	/	0015	A	2013-01-01
A61F		2220	/	005	A	2013-01-01
A61F		2220	/	0025	A	2013-01-01
A61F		2002	/	4687	A	2013-01-01
A61F		2002	/	4681	A	2013-01-01
A61F		2002	/	4627	A	2013-01-01
A61F		2002	/	448	A	2013-01-01
A61F		2002	/	4475	A	2013-01-01
A61F		2002	/	30878	A	2013-01-01
A61F		2002	/	30772	A	2013-01-01
A61F		2002	/	30604	A	2013-01-01
A61F		2002	/	30579	A	2013-01-01
A61F		2002	/	3055	A	2013-01-01
A61F		2002	/	30507	A	2013-01-01
A61F		2002	/	30448	A	2013-01-01
A61F		2002	/	30387	A	2013-01-01
A61F		2002	/	2835	A	2013-01-01
A61B		2017	/	922	A	2013-01-01
A61B		17	/	86	A	2013-01-01

NONE (Assistant Examiner)	(Date)	**Total Claims Allowed:** 20	
/PEDRO PHILOGENE/ Primary Examiner.Art Unit 3733 (Primary Examiner)	05/04/2018 (Date)	O.G. Print Claim(s) 1	O.G. Print Figure 6D

U.S. Patent and Trademark Office

Part of Paper No. 20180504

Issue Classification	Application/Control No.	Applicant(s)/Patent Under Reexamination
	15820232	MOSKOWITZ ET AL.
	Examiner	**Art Unit**
	PEDRO PHILOGENE	3733

A61B		17	/	7064	I	2013-01-01
A61F		2	/	4611	I	2013-01-01
A61B		17	/	0642	I	2013-01-01

CPC Combination Sets								
Symbol					**Type**	**Set**	**Ranking**	**Version**
			/					
			/					

NONE (Assistant Examiner)	(Date)	**Total Claims Allowed:** 20	
/PEDRO PHILOGENE/ Primary Examiner.Art Unit 3733 (Primary Examiner)	05/04/2018 (Date)	O.G. Print Claim(s) 1	O.G. Print Figure 6D

U.S. Patent and Trademark Office

Part of Paper No. 20180504

Issue Classification	Application/Control No.	Applicant(s)/Patent Under Reexamination
	15820232	MOSKOWITZ ET AL.
	Examiner	**Art Unit**
	PEDRO PHILOGENE	3733

US ORIGINAL CLASSIFICATION		INTERNATIONAL CLASSIFICATION									
CLASS	SUBCLASS	CLAIMED					NON-CLAIMED				
623	17.15	A	6	1	F	2 / 44 (2006.0)					
CROSS REFERENCE(S)		A	6	1	B	17 / 064 (2006.01.01)					
CLASS	SUBCLASS (ONE SUBCLASS PER BLOCK)										

NONE (Assistant Examiner) (Date)	**Total Claims Allowed:** 20	
/PEDRO PHILOGENE/ Primary Examiner.Art Unit 3733 05/04/2018 (Primary Examiner) (Date)	O.G. Print Claim(s) 1	O.G. Print Figure 6D

U.S. Patent and Trademark Office Part of Paper No. 20180504

Issue Classification	Application/Control No.	Applicant(s)/Patent Under Reexamination
	15820232	MOSKOWITZ ET AL.
	Examiner	**Art Unit**
	PEDRO PHILOGENE	3733

☐ Claims renumbered in the same order as presented by applicant ☐ CPA ☐ T.D. ☐ R.1.47

Final	Original	Final	Original	Final	Original	Final	Original	Final	Original	Final	Original	Final	Original	Final	Original
	1	16	17												
1	2	17	18												
2	3	18	19												
3	4	19	20												
4	5	20	21												
5	6														
6	7														
7	8														
8	9														
9	10														
10	11														
11	12														
12	13														
13	14														
14	15														
15	16														

NONE (Assistant Examiner)	(Date)	**Total Claims Allowed:** 20	
/PEDRO PHILOGENE/ Primary Examiner.Art Unit 3733 (Primary Examiner)	05/04/2018 (Date)	O.G. Print Claim(s) 1	O.G. Print Figure 6D

U.S. Patent and Trademark Office Part of Paper No. 20180504

IN THE UNITED STATES PATENT AND TRADEMARK OFFICE

First Named Inventor	:	Ahmnon D. Moskowitz	Art Unit	:	3733
			Examiner	:	Pedro Philogene
Application No.	:	15/820,232	Confirmation No.	:	1007
Filed	:	November 21, 2017	Notice of Allowance Date: May 22, 2018		

Title : ZERO-PROFILE EXPANDABLE INTERVERTEBRAL SPACER DEVICES FOR DISTRACTION AND SPINAL FUSION AND A UNIVERSAL TOOL FOR THEIR PLACEMENT AND EXPANSION

MAIL STOP ISSUE FEE
Commissioner for Patents
P.O. Box 1450
Alexandria, VA 22313-1450

REPLY TO NOTICE OF ALLOWANCE

In response to the Notice of Allowance dated May 22, 2018, enclosed is a completed Part B - Fee(s) Transmittal.

We note that the Supplemental Application Data Sheet submitted on March 21, 2018 lists the correct priority claim, but the Filing Receipt issued on April 12, 2018 is incorrect. According to a call with the Office, a corrected filing receipt will be issued next week to reflect the correct priority claim.

The issue fee is being paid with this reply on the Electronic Filing System. Apply those fees and any other necessary charges or credits to Deposit Account 06-1050, referencing the above attorney docket number.

Respectfully submitted,

Date: 5/25/2018

/Stuart A. Nelson/
Stuart A. Nelson
Reg. No. 63,947

Customer Number 26191
Fish & Richardson P.C.
Telephone: (612) 337-2538
Facsimile: (877) 769-7945

61691819.doc

PART B - FEE(S) TRANSMITTAL

Complete and send this form, together with applicable fee(s), to: Mail Mail Stop ISSUE FEE
Commissioner for Patents
P.O. Box 1450
Alexandria, Virginia 22313-1450
or Fax (571)-273-2885

INSTRUCTIONS: This form should be used for transmitting the ISSUE FEE and PUBLICATION FEE (if required). Blocks 1 through 5 should be completed where appropriate. All further correspondence including the Patent, advance orders and notification of maintenance fees will be mailed to the current correspondence address as indicated unless corrected below or directed otherwise in Block 1, by (a) specifying a new correspondence address; and/or (b) indicating a separate "FEE ADDRESS" for maintenance fee notifications.

CURRENT CORRESPONDENCE ADDRESS (Note: Use Block 1 for any change of address)

26191 7590 05/22/2018

FISH & RICHARDSON P.C.
P.O. BOX 1022
MINNEAPOLIS, MN 55440-1022

Note: A certificate of mailing can only be used for domestic mailings of the Fee(s) Transmittal. This certificate cannot be used for any other accompanying papers. Each additional paper, such as an assignment or formal drawing, must have its own certificate of mailing or transmission.

Certificate of Mailing or Transmission

I hereby certify that this Fee(s) Transmittal is being deposited with the United States Postal Service with sufficient postage for first class mail in an envelope addressed to the Mail Stop ISSUE FEE address above, or being facsimile transmitted to the USPTO (571) 273-2885, on the date indicated below.

(Depositor's name)

(Signature)

(Date)

APPLICATION NO.	FILING DATE	FIRST NAMED INVENTOR	ATTORNEY DOCKET NO.	CONFIRMATION NO.
15/820,232	11/21/2017	Ahmnon D. Moskowitz	46440-0020002	1007

TITLE OF INVENTION: ZERO-PROFILE EXPANDABLE INTERVERTEBRAL SPACER DEVICES FOR DISTRACTION AND SPINAL FUSION AND A UNIVERSAL TOOL FOR THEIR PLACEMENT AND EXPANSION

APPLN. TYPE	ENTITY STATUS	ISSUE FEE DUE	PUBLICATION FEE DUE	PREV. PAID ISSUE FEE	TOTAL FEE(S) DUE	DATE DUE
nonprovisional	SMALL	$500	$0		$500	08/22/2018

EXAMINER	ART UNIT	CLASS-SUBCLASS
PHILOGENE, PEDRO	3733	623-017150

1. Change of correspondence address or indication of "Fee Address" (37 CFR 1.363).

[ ] Change of correspondence address (or Change of Correspondence Address form PTO/SB/122) attached.

[ ] "Fee Address" indication (or "Fee Address" Indication form PTO/SB/47; Rev 03-02 or more recent) attached. **Use of a Customer Number is required.**

2. For printing on the patent front page, list

(1) the names of up to 3 registered patent attorneys or agents OR, alternatively,

(2) the name of a single firm (having as a member a registered attorney or agent) and the names of up to 2 registered patent attorneys or agents. If no name is listed, no name will be printed.

1 Fish & Richardson P.C.
2
3

3. ASSIGNEE NAME AND RESIDENCE DATA TO BE PRINTED ON THE PATENT (print or type)

PLEASE NOTE: Unless an assignee is identified below, no assignee data will appear on the patent. If an assignee is identified below, the document has been filed for recordation as set forth in 37 CFR 3.11. Completion of this form is NOT a substitute for filing an assignment.

(A) NAME OF ASSIGNEE
Moskowitz Family LLC

(B) RESIDENCE: (CITY and STATE OR COUNTRY)
Rockville, MD

Please check the appropriate assignee category or categories (will not be printed on the patent): [ ] Individual [X] Corporation or other private group entity [ ] Government

4a. The following fee(s) are submitted:

[X] Issue Fee

[ ] Publication Fee (No small entity discount permitted)

[ ] Advance Order - # of Copies _____

4b. Payment of Fee(s): (**Please first reapply any previously paid issue fee shown above**)

[ ] A check in the amount of the fee(s) is enclosed.

[ ] Payment by credit card. Form PTO-2038 is attached.

[X] The Director is hereby authorized to charge the required fee(s), or credit any overpayment, to Deposit Account Number 06-1050

5. **Change in Entity Status** (from status indicated above)

[ ] Applicant certifying micro entity status. See 37 CFR 1.29 — **NOTE**: Absent a valid certification of Micro Entity Status (see form PTO/SB/15A and 15B), issue fee payment in the micro entity amount will not be accepted at the risk of application abandonment.

[ ] Applicant asserting small entity status. See 37 CFR 1.27. — **NOTE**: If the application was previously under micro entity status, checking this box will be taken to be a notification of loss of entitlement to micro entity status.

[ ] Applicant changing to regular undiscounted fee status. — **NOTE**: Checking this box will be taken to be a notification of loss of entitlement to small or micro entity status, as applicable.

The Director of the USPTO is requested to apply the Issue Fee and Publication Fee (if any) or to re-apply any previously paid issue fee to the application identified above.
NOTE: The Issue Fee and Publication Fee (if required) will not be accepted from anyone other than the applicant; a registered attorney or agent; or the assignee or other party in interest as shown by the records of the United States Patent and Trademark Office.

Authorized Signature /Stuart A. Nelson/ Date 5/25/2018

Typed or printed name Stuart A. Nelson Registration No. 63,947

61691824.doc

Electronic Patent Application Fee Transmittal

Application Number:	15820232
Filing Date:	21-Nov-2017
Title of Invention:	ZERO-PROFILE EXPANDABLE INTERVERTEBRAL SPACER DEVICES FOR DISTRACTION AND SPINAL FUSION AND A UNIVERSAL TOOL FOR THEIR PLACEMENT AND EXPANSION
First Named Inventor/Applicant Name:	Ahmnon D. Moskowitz
Filer:	Stuart A. Nelson/Abby Remer
Attorney Docket Number:	46440-0020002

Filed as Small Entity

Filing Fees for **Utility under 35 USC 111(a)**

Description	Fee Code	Quantity	Amount	Sub-Total in USD($)
Basic Filing:				
Pages:				
Claims:				
Miscellaneous-Filing:				
Petition:				
Patent-Appeals-and-Interference:				
Post-Allowance-and-Post-Issuance:				
UTILITY APPL ISSUE FEE	2501	1	500	500

Description	Fee Code	Quantity	Amount	Sub-Total in USD($)
Extension-of-Time:				
Miscellaneous:				
			Total in USD ($)	**500**

Electronic Acknowledgement Receipt	
EFS ID:	32732009
Application Number:	15820232
International Application Number:	
Confirmation Number:	1007
Title of Invention:	ZERO-PROFILE EXPANDABLE INTERVERTEBRAL SPACER DEVICES FOR DISTRACTION AND SPINAL FUSION AND A UNIVERSAL TOOL FOR THEIR PLACEMENT AND EXPANSION
First Named Inventor/Applicant Name:	Ahmnon D. Moskowitz
Customer Number:	26191
Filer:	Stuart A. Nelson/Janell Nelson
Filer Authorized By:	Stuart A. Nelson
Attorney Docket Number:	46440-0020002
Receipt Date:	25-MAY-2018
Filing Date:	21-NOV-2017
Time Stamp:	16:59:57
Application Type:	Utility under 35 USC 111(a)

Payment information:

Submitted with Payment	yes
Payment Type	DA
Payment was successfully received in RAM	$500
RAM confirmation Number	052918INTEFSW00005617061050
Deposit Account	
Authorized User	
The Director of the USPTO is hereby authorized to charge indicated fees and credit any overpayment as follows:	

File Listing:

Document Number	Document Description	File Name	File Size(Bytes)/ Message Digest	Multi Part /.zip	Pages (if appl.)
1	Issue Fee Payment (PTO-85B)	IssueFee.pdf	131338 8441ee56b63b52334d8b00da89df0c7bd1fd4eda	no	2
Warnings:					
Information:					
2	Fee Worksheet (SB06)	fee-info.pdf	30604 512c03f1dd4f851561ff725acbcff0da6571fd12	no	2
Warnings:					
Information:					
		Total Files Size (in bytes):	161942		

This Acknowledgement Receipt evidences receipt on the noted date by the USPTO of the indicated documents, characterized by the applicant, and including page counts, where applicable. It serves as evidence of receipt similar to a Post Card, as described in MPEP 503.

<u>New Applications Under 35 U.S.C. 111</u>
If a new application is being filed and the application includes the necessary components for a filing date (see 37 CFR 1.53(b)-(d) and MPEP 506), a Filing Receipt (37 CFR 1.54) will be issued in due course and the date shown on this Acknowledgement Receipt will establish the filing date of the application.
<u>National Stage of an International Application under 35 U.S.C. 371</u>
If a timely submission to enter the national stage of an international application is compliant with the conditions of 35 U.S.C. 371 and other applicable requirements a Form PCT/DO/EO/903 indicating acceptance of the application as a national stage submission under 35 U.S.C. 371 will be issued in addition to the Filing Receipt, in due course.
<u>New International Application Filed with the USPTO as a Receiving Office</u>
If a new international application is being filed and the international application includes the necessary components for an international filing date (see PCT Article 11 and MPEP 1810), a Notification of the International Application Number and of the International Filing Date (Form PCT/RO/105) will be issued in due course, subject to prescriptions concerning national security, and the date shown on this Acknowledgement Receipt will establish the international filing date of the application.

UNITED STATES PATENT AND TRADEMARK OFFICE

UNITED STATES DEPARTMENT OF COMMERCE
United States Patent and Trademark Office
Address: COMMISSIONER FOR PATENTS
P.O. Box 1450
Alexandria, Virginia 22313-1450
www.uspto.gov

APPLICATION NUMBER	FILING or 371(c) DATE	GRP ART UNIT	FIL FEE REC'D	ATTY.DOCKET.NO	TOT CLAIMS	IND CLAIMS
15/820,232	11/21/2017	3733	730	46440-0020002	20	3

CONFIRMATION NO. 1007

CORRECTED FILING RECEIPT

26191
FISH & RICHARDSON P.C. (TC)
PO BOX 1022
MINNEAPOLIS, MN 55440-1022

OC000000100070680

Date Mailed: 06/07/2018

Receipt is acknowledged of this non-provisional patent application. The application will be taken up for examination in due course. Applicant will be notified as to the results of the examination. Any correspondence concerning the application must include the following identification information: the U.S. APPLICATION NUMBER, FILING DATE, NAME OF APPLICANT, and TITLE OF INVENTION. Fees transmitted by check or draft are subject to collection. Please verify the accuracy of the data presented on this receipt. **If an error is noted on this Filing Receipt, please submit a written request for a Filing Receipt Correction. Please provide a copy of this Filing Receipt with the changes noted thereon. If you received a "Notice to File Missing Parts" for this application, please submit any corrections to this Filing Receipt with your reply to the Notice. When the USPTO processes the reply to the Notice, the USPTO will generate another Filing Receipt incorporating the requested corrections**

Inventor(s)

Ahmnon D. Moskowitz, Rockville, MD;
Mosheh T. Moskowitz, Rockville, MD;
Pablo A. Valdivia Y. Alvarado, Cambridge, MA;
Eric Sugalski, Arlington, MA;
Nathan C. Moskowitz, Rockville, MD;

Applicant(s)

Nathan C. Moskowitz, Rockville, MD;

Power of Attorney: The patent practitioners associated with Customer Number 26191

Domestic Priority data as claimed by applicant

This application is a CON of 14/063,197 10/25/2013 PAT 9848993
which is a CIP of 13/210,150 08/15/2011 PAT 9867719
and is a CIP of 13/210,157 08/15/2011 PAT 9889022
and is a CIP of 13/210,162 08/15/2011 PAT 9895238
and is a CIP of 13/210,168 08/15/2011 PAT 9907674
and is a CIP of 13/741,361 01/14/2013 PAT 9301854
and claims benefit of 61/801,783 03/15/2013
and claims benefit of 61/718,707 10/25/2012
and said 13/210,150 08/15/2011
is a CON of 13/084,543 04/11/2011 PAT 8353913
and is a CON of 13/108,982 05/16/2011 PAT 9005293
and said 13/210,157 08/15/2011
is a CON of 13/084,543 04/11/2011 PAT 8353913
and is a CON of 13/108,982 05/16/2011 PAT 9005293
and said 13/210,162 08/15/2011

is a CON of 13/084,543 04/11/2011 PAT 8353913
and is a CON of 13/108,982 05/16/2011 PAT 9005293
and said 13/741,361 01/14/2013
is a CON of 13/084,543 04/11/2011 PAT 8353913
and is a CON of 13/108,982 05/16/2011 PAT 9005293
and said 13/084,543 04/11/2011
is a CON of 11/842,855 08/21/2007 PAT 7942903
and said 13/108,982 05/16/2011
is a CON of 11/842,855 08/21/2007 PAT 7942903
which is a CIP of 11/536,815 09/29/2006 PAT 7846188
which is a CIP of 11/208,644 08/23/2005 PAT 7704279
which claims benefit of 60/670,231 04/12/2005

Foreign Applications for which priority is claimed (You may be eligible to benefit from the **Patent Prosecution Highway** program at the USPTO. Please see http://www.uspto.gov for more information.) - None.
Foreign application information must be provided in an Application Data Sheet in order to constitute a claim to foreign priority. See 37 CFR 1.55 and 1.76.

Permission to Access Application via Priority Document Exchange: Yes

Permission to Access Search Results: Yes

Applicant may provide or rescind an authorization for access using Form PTO/SB/39 or Form PTO/SB/69 as appropriate.

If Required, Foreign Filing License Granted: 12/11/2017

The country code and number of your priority application, to be used for filing abroad under the Paris Convention, is **US 15/820,232**

Projected Publication Date: Not Applicable

Non-Publication Request: No

Early Publication Request: No
** **SMALL ENTITY** **
Title

ZERO-PROFILE EXPANDABLE INTERVERTEBRAL SPACER DEVICES FOR DISTRACTION AND SPINAL FUSION AND A UNIVERSAL TOOL FOR THEIR PLACEMENT AND EXPANSION

Preliminary Class

623

Statement under 37 CFR 1.55 or 1.78 for AIA (First Inventor to File) Transition Applications: No

PROTECTING YOUR INVENTION OUTSIDE THE UNITED STATES

Since the rights granted by a U.S. patent extend only throughout the territory of the United States and have no effect in a foreign country, an inventor who wishes patent protection in another country must apply for a patent in a specific country or in regional patent offices. Applicants may wish to consider the filing of an international application under the Patent Cooperation Treaty (PCT). An international (PCT) application generally has the same effect as a regular national patent application in each PCT-member country. The PCT process **simplifies** the filing of patent applications on the same invention in member countries, but **does not result** in a grant of "an international

patent" and does not eliminate the need of applicants to file additional documents and fees in countries where patent protection is desired.

Almost every country has its own patent law, and a person desiring a patent in a particular country must make an application for patent in that country in accordance with its particular laws. Since the laws of many countries differ in various respects from the patent law of the United States, applicants are advised to seek guidance from specific foreign countries to ensure that patent rights are not lost prematurely.

Applicants also are advised that in the case of inventions made in the United States, the Director of the USPTO must issue a license before applicants can apply for a patent in a foreign country. The filing of a U.S. patent application serves as a request for a foreign filing license. The application's filing receipt contains further information and guidance as to the status of applicant's license for foreign filing.

Applicants may wish to consult the USPTO booklet, "General Information Concerning Patents" (specifically, the section entitled "Treaties and Foreign Patents") for more information on timeframes and deadlines for filing foreign patent applications. The guide is available either by contacting the USPTO Contact Center at 800-786-9199, or it can be viewed on the USPTO website at http://www.uspto.gov/web/offices/pac/doc/general/index.html.

For information on preventing theft of your intellectual property (patents, trademarks and copyrights), you may wish to consult the U.S. Government website, http://www.stopfakes.gov. Part of a Department of Commerce initiative, this website includes self-help "toolkits" giving innovators guidance on how to protect intellectual property in specific countries such as China, Korea and Mexico. For questions regarding patent enforcement issues, applicants may call the U.S. Government hotline at 1-866-999-HALT (1-866-999-4258).

LICENSE FOR FOREIGN FILING UNDER

Title 35, United States Code, Section 184

Title 37, Code of Federal Regulations, 5.11 & 5.15

GRANTED

The applicant has been granted a license under 35 U.S.C. 184, if the phrase "IF REQUIRED, FOREIGN FILING LICENSE GRANTED" followed by a date appears on this form. Such licenses are issued in all applications where the conditions for issuance of a license have been met, regardless of whether or not a license may be required as set forth in 37 CFR 5.15. The scope and limitations of this license are set forth in 37 CFR 5.15(a) unless an earlier license has been issued under 37 CFR 5.15(b). The license is subject to revocation upon written notification. The date indicated is the effective date of the license, unless an earlier license of similar scope has been granted under 37 CFR 5.13 or 5.14.

This license is to be retained by the licensee and may be used at any time on or after the effective date thereof unless it is revoked. This license is automatically transferred to any related applications(s) filed under 37 CFR 1.53(d). This license is not retroactive.

The grant of a license does not in any way lessen the responsibility of a licensee for the security of the subject matter as imposed by any Government contract or the provisions of existing laws relating to espionage and the national security or the export of technical data. Licensees should apprise themselves of current regulations especially with respect to certain countries, of other agencies, particularly the Office of Defense Trade Controls, Department of State (with respect to Arms, Munitions and Implements of War (22 CFR 121-128)); the Bureau of Industry and

Security, Department of Commerce (15 CFR parts 730-774); the Office of Foreign AssetsControl, Department of Treasury (31 CFR Parts 500+) and the Department of Energy.

NOT GRANTED

No license under 35 U.S.C. 184 has been granted at this time, if the phrase "IF REQUIRED, FOREIGN FILING LICENSE GRANTED" DOES NOT appear on this form. Applicant may still petition for a license under 37 CFR 5.12, if a license is desired before the expiration of 6 months from the filing date of the application. If 6 months has lapsed from the filing date of this application and the licensee has not received any indication of a secrecy order under 35 U.S.C. 181, the licensee may foreign file the application pursuant to 37 CFR 5.15(b).

SelectUSA

The United States represents the largest, most dynamic marketplace in the world and is an unparalleled location for business investment, innovation, and commercialization of new technologies. The U.S. offers tremendous resources and advantages for those who invest and manufacture goods here. Through SelectUSA, our nation works to promote and facilitate business investment. SelectUSA provides information assistance to the international investor community; serves as an ombudsman for existing and potential investors; advocates on behalf of U.S. cities, states, and regions competing for global investment; and counsels U.S. economic development organizations on investment attraction best practices. To learn more about why the United States is the best country in the world to develop technology, manufacture products, deliver services, and grow your business, visit http://www.SelectUSA.gov or call +1-202-482-6800.

UNITED STATES PATENT AND TRADEMARK OFFICE

UNITED STATES DEPARTMENT OF COMMERCE
United States Patent and Trademark Office
Address: COMMISSIONER FOR PATENTS
P.O. Box 1450
Alexandria, Virginia 22313-1450
www.uspto.gov

APPLICATION NO.	ISSUE DATE	PATENT NO.	ATTORNEY DOCKET NO.	CONFIRMATION NO.
15/820,232	07/10/2018	10016284	46440-0020002	1007

26191 7590 06/20/2018
FISH & RICHARDSON P.C. (TC)
PO BOX 1022
MINNEAPOLIS, MN 55440-1022

ISSUE NOTIFICATION

The projected patent number and issue date are specified above.

Determination of Patent Term Adjustment under 35 U.S.C. 154 (b)
(application filed on or after May 29, 2000)

The Patent Term Adjustment is 0 day(s). Any patent to issue from the above-identified application will include an indication of the adjustment on the front page.

If a Continued Prosecution Application (CPA) was filed in the above-identified application, the filing date that determines Patent Term Adjustment is the filing date of the most recent CPA.

Applicant will be able to obtain more detailed information by accessing the Patent Application Information Retrieval (PAIR) WEB site (http://pair.uspto.gov).

Any questions regarding the Patent Term Extension or Adjustment determination should be directed to the Office of Patent Legal Administration at (571)-272-7702. Questions relating to issue and publication fee payments should be directed to the Application Assistance Unit (AAU) of the Office of Data Management (ODM) at (571)-272-4200.

APPLICANT(s) (Please see PAIR WEB site http://pair.uspto.gov for additional applicants):

Ahmnon D. Moskowitz, Rockville, MD;
Nathan C. Moskowitz, Rockville, MD;
Mosheh T. Moskowitz, Rockville, MD;
Pablo A. Valdivia Y. Alvarado, Cambridge, MA;
Eric Sugalski, Arlington, MA;
Nathan C. Moskowitz, Rockville, MD;

The United States represents the largest, most dynamic marketplace in the world and is an unparalleled location for business investment, innovation, and commercialization of new technologies. The USA offers tremendous resources and advantages for those who invest and manufacture goods here. Through SelectUSA, our nation works to encourage and facilitate business investment. To learn more about why the USA is the best country in the world to develop technology, manufacture products, and grow your business, visit SelectUSA.gov.

IR103 (Rev. 10/09)

Under the Paperwork Reduction Act of 1995, no persons are required to respond to a collection of information unless it displays a valid OMB control number.

STATEMENT UNDER 37 CFR 3.73(c)

Applicant/Patent Owner: MOSKOWITZ FAMILY LLC

Application No./Patent No.: 15/820,232 Filed/Issue Date: November 21, 2017

Titled: ZERO-PROFILE EXPANDABLE INTERVERTEBRAL SPACER DEVICES FOR DISTRACTION AND SPINAL FUSION AND A UNIVERSAL TOOL FOR THEIR PLACEMENT AND EXPANSION

MOSKOWITZ FAMILY LLC, a Limited Liability Corporation
(Name of Assignee) (Type of Assignee, e.g., corporation, partnership, university, government agency, etc.)

states that, for the patent application/patent identified above, it is (choose **one** of the option 1, 2, 3 or 4 below):

1. ☒ The assignee of the entire right, title, and interest.

2. ☐ An assignee of less than the entire right, title and interest (check applicable box):

☐ The extent (by percentage) of its ownership interest is _____. Additional Statement(s) by the owners holding the balance of the interest must be submitted to account for 100% of the ownership interest.

☐ There are unspecified percentages of ownership. The other parties, including inventors, who together own the entire right, title and interest are:

Additional Statement(s) by the owner(s) holding the balance of the interest must be submitted to account for the entire right, title, and interest.

3. ☐ The assignee of an undivided interest in the entirety (a complete assignment from one of the joint inventors was made). The other parties, including inventors, who together own the entire right, title, and interest are:

Additional Statement(s) by the owner(s) holding the balance of the interest must be submitted to account for the entire right, title, and interest.

4. ☐ The recipient, via a court proceeding or the like (e.g., bankruptcy, probate), of an undivided interest in the entirety (a complete transfer of ownership interest was made). The certified document(s) showing the transfer is attached.

The interest identified in option 1, 2 or 3 above (not option 4) is evidenced by either (choose **one** of the options A or B below):

A. ☐ An assignment from the inventor(s) of the patent application/patent identified above. The assignment was recorded in the United States Patent and Trademark Office at Reel _____, Frame _____, or for which a copy thereof is attached.

B. ☒ A chain of title from the inventor(s), of the patent application/patent identified above, to the current assignee as follows:

1. From: SUGALSKI, ERIC To: MOSKOWITZ, NATHAN C.
The document was recorded in the United States Patent and Trademark Office at
Reel 045904, Frame 0815, or for which a copy thereof is attached.

2. From: ALVARADO, PABLO A. VALDIVIA Y To: MOSKOWITZ, NATHAN C.
The document was recorded in the United States Patent and Trademark Office at
Reel 045636, Frame 0075, or for which a copy thereof is attached.

This collection of information is required by 37 CFR 3.73(b). The information is required to obtain or retain a benefit by the public which is to file (and by the USPTO to process) an application. Confidentiality is governed by 35 U.S.C. 122 and 37 CFR 1.11 and 1.14. This collection is estimated to take 12 minutes to complete, including gathering, preparing, and submitting the completed application form to the USPTO. Time will vary depending upon the individual case. Any comments on the amount of time you require to complete this form and/or suggestions for reducing this burden, should be sent to the Chief Information Officer, U.S. Patent and Trademark Office, U.S. Department of Commerce, P.O. Box 1450, Alexandria, VA 22313-1450. DO NOT SEND FEES OR COMPLETED FORMS TO THIS ADDRESS. **SEND TO: Commissioner for Patents, P.O. Box 1450, Alexandria, VA 22313-1450.**

If you need assistance in completing the form, call 1-800-PTO-9199 and select option 2.

Approved for use through 01/31/2013. OMB 0651-0031
U.S. Patent and Trademark Office; U.S. DEPARTMENT OF COMMERCE
Under the Paperwork Reduction Act of 1995, no persons are required to respond to a collection of information unless it displays a valid OMB control number.

STATEMENT UNDER 37 CFR 3.73(c)

3. From: MOSKOWITZ, MOSHEH T. To: MOSKOWITZ, NATHAN C.
   The document was recorded in the United States Patent and Trademark Office at
   Reel 045997, Frame 0805, or for which a copy thereof is attached.
4. From: MOSKOWITZ, AHMNON D. To: MOSKOWITZ, NATHAN C.
   The document was recorded in the United States Patent and Trademark Office at
   Reel 046069, Frame 0540, or for which a copy thereof is attached.
5. From: MOSKOWITZ, NATHAN C. To: MOSKOWITZ FAMILY LLC
   The document was recorded in the United States Patent and Trademark Office at
   Reel 045586, Frame 0373, or for which a copy thereof is attached.
6. From: SCHOON, DAVID To: MOSKOWITZ FAMILY LLC
   The document was recorded in the United States Patent and Trademark Office at
   Reel 057014, Frame 0629, or for which a copy thereof is attached.

☐ Additional documents in the chain of title are listed on a supplemental sheet(s).

☒ As required by 37 CFR 3.73(c)(1)(i), the documentary evidence of the chain of title from the original owner to the assignee was, or concurrently is being, submitted for recordation pursuant to 37 CFR 3.11.

[NOTE: A separate copy *(i.e.,* a true copy of the original assignment document(s)) must be submitted to Assignment Division in accordance with 37 CFR Part 3, to record the assignment in the records of the USPTO. See MPEP 302.08]

The undersigned (whose title is supplied below) is authorized to act on behalf of the assignee.

/Stuart A. Nelson/	8/31/2021
Signature	Date
Stuart A. Nelson	63,947
Printed or Typed Name	Title or Registration Number

PTO/AIA/01 (06-12)
Approved for use through 01/31/2014. OMB 0651-0032
U.S. Patent and Trademark Office; U.S. DEPARTMENT OF COMMERCE
Under the Paperwork Reduction Act of 1995, no persons are required to respond to a collection of information unless it displays a valid OMB control number

DECLARATION (37 CFR 1.63) FOR UTILITY OR DESIGN APPLICATION USING AN APPLICATION DATA SHEET (37 CFR 1.76)

Title of Invention	ZERO-PROFILE EXPANDABLE INTERVERTEBRAL SPACER DEVICES FOR DISTRACTION AND SPINAL FUSION AND A UNIVERSAL TOOL FOR THEIR PLACEMENT AND EXPANSION

As the below named inventor, I hereby declare that:

This declaration is directed to:

☐ The attached application, or

☒ United States application or PCT international application number 14/063,197 filed on 10/25/2013.

The above-identified application was made or authorized to be made by me.

I believe that I am the original inventor or an original joint inventor of a claimed invention in the application.

I hereby acknowledge that any willful false statement made in this declaration is punishable under 18 U.S.C. 1001 by fine or imprisonment of not more than five (5) years, or both.

WARNING:

Petitioner/applicant is cautioned to avoid submitting personal information in documents filed in a patent application that may contribute to identity theft. Personal information such as social security numbers, bank account numbers, or credit card numbers (other than a check or credit card authorization form PTO-2038 submitted for payment purposes) is never required by the USPTO to support a petition or an application. If this type of personal information is included in documents submitted to the USPTO, petitioners/applicants should consider redacting such personal information from the documents before submitting them to the USPTO. Petitioner/applicant is advised that the record of a patent application is available to the public after publication of the application (unless a non-publication request in compliance with 37 CFR 1.213(a) is made in the application) or issuance of a patent. Furthermore, the record from an abandoned application may also be available to the public if the application is referenced in a published application or an issued patent (see 37 CFR 1.14). Checks and credit card authorization forms PTO-2038 submitted for payment purposes are not retained in the application file and therefore are not publicly available.

LEGAL NAME OF INVENTOR

Inventor: David SCHOON Date (Optional): 4/1/2015

Signature: _____

Note: An application data sheet (PTO/SB/14 or equivalent), including naming the entire inventive entity, must accompany this form or must have been previously filed. Use an additional PTO/AIA/01 form for each additional inventor.

This collection of information is required by 35 U.S.C. 115 and 37 CFR 1.63. The information is required to obtain or retain a benefit by the public which is to file (and by the USPTO to process) an application. Confidentiality is governed by 35 U.S.C. 122 and 37 CFR 1.11 and 1.14. This collection is estimated to take 1 minute to complete, including gathering, preparing, and submitting the completed application form to the USPTO. Time will vary depending upon the individual case. Any comments on the amount of time you require to complete this form and/or suggestions for reducing this burden, should be sent to the Chief Information Officer, U.S. Patent and Trademark Office, U.S. Department of Commerce, P.O. Box 1450, Alexandria, VA 22313-1450. DO NOT SEND FEES OR COMPLETED FORMS TO THIS ADDRESS. **SEND TO: Commissioner for Patents, P.O. Box 1450, Alexandria, VA 22313-1450.**

If you need assistance in completing the form, call 1-800-PTO-9199 and select option 2.

Electronic Patent Application Fee Transmittal

Application Number:	15820232
Filing Date:	21-Nov-2017
Title of Invention:	ZERO-PROFILE EXPANDABLE INTERVERTEBRAL SPACER DEVICES FOR DISTRACTION AND SPINAL FUSION AND A UNIVERSAL TOOL FOR THEIR PLACEMENT AND EXPANSION
First Named Inventor/Applicant Name:	Ahmnon D. Moskowitz
Filer:	Stuart A. Nelson/Emily Whitcomb
Attorney Docket Number:	46440-0020002

Filed as Small Entity

Filing Fees for Utility under 35 USC 111(a)

Description	Fee Code	Quantity	Amount	Sub-Total in USD($)
Basic Filing:				
Pages:				
Claims:				
Miscellaneous-Filing:				
Petition:				
Patent-Appeals-and-Interference:				
Post-Allowance-and-Post-Issuance:				
CERTIFICATE OF CORRECTION	2811	1	160	160

Description	Fee Code	Quantity	Amount	Sub-Total in USD($)
Extension-of-Time:				
Miscellaneous:				
		Total in USD ($)		**160**

Electronic Acknowledgement Receipt	
EFS ID:	43651515
Application Number:	15820232
International Application Number:	
Confirmation Number:	1007
Title of Invention:	ZERO-PROFILE EXPANDABLE INTERVERTEBRAL SPACER DEVICES FOR DISTRACTION AND SPINAL FUSION AND A UNIVERSAL TOOL FOR THEIR PLACEMENT AND EXPANSION
First Named Inventor/Applicant Name:	Ahmnon D. Moskowitz
Customer Number:	26191
Filer:	Stuart A. Nelson/Emily Whitcomb
Filer Authorized By:	Stuart A. Nelson
Attorney Docket Number:	46440-0020002
Receipt Date:	31-AUG-2021
Filing Date:	21-NOV-2017
Time Stamp:	16:32:05
Application Type:	Utility under 35 USC 111(a)

Payment information:

Submitted with Payment	yes
Payment Type	DA
Payment was successfully received in RAM	$160
RAM confirmation Number	E20218UG32310288
Deposit Account	
Authorized User	
The Director of the USPTO is hereby authorized to charge indicated fees and credit any overpayment as follows:	

File Listing:

Document Number	Document Description	File Name	File Size(Bytes)/ Message Digest	Multi Part /.zip	Pages (if appl.)
1	Request under Rule 48 correcting inventorship	RequesttoCorrectInventorship.PDF	40840 d3b6cf4bbc95e3d79d0e39b537bafc24df8f6bfa	no	1
Warnings:					
Information:					
2	Assignee showing of ownership per 37 CFR 3.73	Statement373C.PDF	85550 4c3d06d8ab8128128c651d36b13f284ac8310db8	no	2
Warnings:					
Information:					
3	Oath or Declaration filed	002SignedDecs.pdf	224233 d6ce2e35170ee44afd517d79bf7a43ccc32f4e1a	no	2
Warnings:					
Information:					
4	Oath or Declaration filed	002OfficerDec.pdf	369812 0fc6de8d972079cbc14f3c30f8e4f81498444 3ef	no	1
Warnings:					
Information:					
5	Oath or Declaration filed	SchoonDec.pdf	1425286 de86decff2d77c6734b0aa1eac90eede6ecbd0f0	no	1
Warnings:					
Information:					
6	Fee Worksheet (SB06)	fee-info.pdf	38372 48e3bd57b1085272b0569a85a9fce29f429ef698	no	2
Warnings:					
Information:					

Total Files Size (in bytes):	2184093

This Acknowledgement Receipt evidences receipt on the noted date by the USPTO of the indicated documents, characterized by the applicant, and including page counts, where applicable. It serves as evidence of receipt similar to a Post Card, as described in MPEP 503.

New Applications Under 35 U.S.C. 111
If a new application is being filed and the application includes the necessary components for a filing date (see 37 CFR 1.53(b)-(d) and MPEP 506), a Filing Receipt (37 CFR 1.54) will be issued in due course and the date shown on this Acknowledgement Receipt will establish the filing date of the application.
National Stage of an International Application under 35 U.S.C. 371
If a timely submission to enter the national stage of an international application is compliant with the conditions of 35 U.S.C. 371 and other applicable requirements a Form PCT/DO/EO/903 indicating acceptance of the application as a national stage submission under 35 U.S.C. 371 will be issued in addition to the Filing Receipt, in due course.
New International Application Filed with the USPTO as a Receiving Office
If a new international application is being filed and the international application includes the necessary components for an international filing date (see PCT Article 11 and MPEP 1810), a Notification of the International Application Number and of the International Filing Date (Form PCT/RO/105) will be issued in due course, subject to prescriptions concerning national security, and the date shown on this Acknowledgement Receipt will establish the international filing date of the application.

IN THE UNITED STATES PATENT AND TRADEMARK OFFICE

First Named Inventor	:	Ahmnon D. Moskowitz	Art Unit	:	3733
Patent No.	:	10,016,284	Examiner	:	Pedro Philogene
Issue Date	:	July 10, 2018	Conf. No.	:	1007
Application No.	:	15/820,232			
Filed	:	November 21, 2017			
Title	:	ZERO-PROFILE EXPANDABLE INTERVERTEBRAL SPACER DEVICES FOR DISTRACTION AND SPINAL FUSION AND A UNIVERSAL TOOL FOR THEIR PLACEMENT AND EXPANSION			

Commissioner for Patents
P.O. Box 1450
Alexandria, VA 22313-1450

REQUEST TO CORRECT INVENTORSHIP OF PATENT UNDER 37 C.F.R. § 1.324

Applicant respectfully requests that the inventorship of the above-referenced utility patent be corrected pursuant to 37 C.F.R. § 1.324 to add the name of the following inventor(s):

David Schoon

Statements from all inventors and the assignee, agreeing to the change of inventorship are enclosed.

Payment of the required fee set forth in § 1.20(b) is being made at this time, apply any other charges or credits to Deposit Account No. 06-1050, referencing the above attorney docket number.

Respectfully submitted,

Date: 8/31/2021

/Stuart A. Nelson/
Stuart A. Nelson
Reg. No. 63,947

Customer Number 26191
Fish & Richardson P.C.
Telephone: (612) 337-2538
Facsimile: (877) 769-7945

62230728.doc

IN THE UNITED STATES PATENT AND TRADEMARK OFFICE

First Named Inventor	:	Ahmnon D. Moskowitz	Art Unit	:	3733
Patent No.	:	10,016,284	Examiner	:	Pedro Philogene
Issue Date	:	July 10, 2018	Conf. No.	:	1007
Application No.	:	15/820,232			
Filed	:	November 21, 2017			
Title	:	ZERO-PROFILE EXPANDABLE INTERVERTEBRAL SPACER DEVICES FOR DISTRACTION AND SPINAL FUSION AND A UNIVERSAL TOOL FOR THEIR PLACEMENT AND EXPANSION			

Commissioner for Patents
P.O. Box 1450
Alexandria, VA 22313-1450

REQUEST TO CORRECT INVENTORSHIP - INVENTOR'S DECLARATION

Ahmnon D. Moskowitz, Mosheh T. Moskowitz, Pablo A. Valdivia Y. Alvarado, Eric Sugalski, Nathan C. Moskowitz and David Schoon each hereby declare:

1. That he is an original inventor of the above-identified patent.

2. That he either agrees that David Schoon should be added as an inventor or that he has no disagreement with adding David Schoon as an inventor.

Date: 1/23/20

Ahmnon D. Moskowitz

Date: 1/23/20

Mosheh T. Moskowitz

Date: 08/30/21

Pablo A. Valdivia Y. Alvarado

Date: 01 / 23 / 2020

Eric Sugalski

Date: 1/23/20

Nathan C. Moskowitz

Date: 1/23/20

David Schodn

Fish & Richardson P.C.
3200 RBC Plaza
60 South Sixth Street
Minneapolis, MN 55402
Telephone: (612) 337-2538
Facsimile: (877) 769-7945

IN THE UNITED STATES PATENT AND TRADEMARK OFFICE

First Named Inventor	:	Ahmnon D. Moskowitz	Art Unit	:	3733
Patent No.	:	10,016,284	Examiner	:	Pedro Philogene
Issue Date	:	July 10, 2018	Conf. No.	:	1007
Application No.	:	15/820,232			
Filed	:	November 21, 2017			
Title	:	ZERO-PROFILE EXPANDABLE INTERVERTEBRAL SPACER DEVICES FOR DISTRACTION AND SPINAL FUSION AND A UNIVERSAL TOOL FOR THEIR PLACEMENT AND EXPANSION			

Commissioner for Patents
P.O. Box 1450
Alexandria, VA 22313-1450

REQUEST TO CORRECT INVENTORSHIP - COMPANY OFFICER'S DECLARATION

As an officer of the concern to which the noted application has been assigned, I hereby consent to the correction of inventorship of this patent by adding David Schoon.

Respectfully submitted,

Date: 7/15/2

MOSKOWITZ FAMILY LLC
Name:
Title:

Fish & Richardson P.C.
3200 RBC Plaza
60 South Sixth Street
Minneapolis, MN 55402
Telephone: (612) 337-2538
Facsimile: (877) 769-7945

UNITED STATES PATENT AND TRADEMARK OFFICE

UNITED STATES DEPARTMENT OF COMMERCE
United States Patent and Trademark Office
Address: COMMISSIONER FOR PATENTS
P.O. Box 1450
Alexandria, Virginia 22313-1450
www.uspto.gov

APPLICATION NO.	FILING DATE	FIRST NAMED INVENTOR	ATTORNEY DOCKET NO.	CONFIRMATION NO.
15/820,232	11/21/2017	Ahmnon D. Moskowitz	46440-0020002	1007

26191 7590 11/29/2021
FISH & RICHARDSON P.C. (TC)
PO BOX 1022
MINNEAPOLIS, MN 55440-1022

EXAMINER
PHILOGENE, PEDRO

ART UNIT	PAPER NUMBER
3733	

NOTIFICATION DATE	DELIVERY MODE
11/29/2021	ELECTRONIC

Please find below and/or attached an Office communication concerning this application or proceeding.

The time period for reply, if any, is set in the attached communication.

Notice of the Office communication was sent electronically on above-indicated "Notification Date" to the following e-mail address(es):

PATDOCTC@fr.com

PTOL-90A (Rev. 04/07)

UNITED STATES PATENT AND TRADEMARK OFFICE

Commissioner for Patents
United States Patent and Trademark Office
P.O. Box 1450
Alexandria, VA 22313-1450
www.uspto.gov

Patent No.: 10016284
Issue Date: 07/10/2018
Appl. No.: 15/820,232
Filed: 11/21/2017

PART (A) RESPONSE FOR CERTIFICATES OF CORRECTION

This is a decision on the Certificate of Correction request filed ____.

The request for issuance of Certificate of Correction for the above-identified correction(s) under the provisions of 37 CFR 1.322 and/or 1.323 is hereby:

(Check one)
☐ Approved ☐ Approved in Part ☐ Denied

Comments: ____

PART (B) PETITION UNDER 37 CFR 1.324 OR 37 CFR 1.48

☑ This is a decision on the petition filed 31 August 2021 to correct inventorship under 37 CFR 1.324.

☐ This is a decision on the request under 37 CFR 1.48, petition filed ____. In view of the fact that the patent has already issued, the request under 37 CFR 1.48 has been treated as a petition to correct inventorship under 37 CFR 1.324.

The petition is hereby: ☑ Granted ☐ Dismissed

Comment: ____

The patented filed is being forwarded to Certificate of Corrections Branch for issuance of a certificate naming only the actual inventor or inventors.

/EDUARDO C ROBERT/
Supervisory Patent Examiner, Art Unit 3773
Technology Center 3700
Phone: (571)272-4719

Certificates of Correction Branch email: CustomerServiceCoC@uspto.gov CoC Central Phone Number: (703) 756-1814

UNITED STATES PATENT AND TRADEMARK OFFICE

CERTIFICATE OF CORRECTION

PATENT NO. : 10,016,284 B2
APPLICATION NO. : 15/820232
DATED : July 10, 2018
INVENTOR(S) : Moskowitz et al.

It is certified that error appears in the above-identified patent and that said Letters Patent is hereby corrected as shown below:

On the Title Page

Item (72) Inventor is corrected to read:
-- Ahmnon D. Moskowitz, Rockville, MD (US);
Mosheh T. Moskowitz, Rockville, MD (US);
Pablo A. Valdivia Y. Alvarado, Cambridge, MA (US);
Eric Sugalski, Arlington, MA (US);
Nathan C. Moskowitz, Rockville, MD (US);
David Schoon, Somerville, MA (US) --.

Signed and Sealed this
Twenty-first Day of December, 2021

Drew Hirshfeld
Performing the Functions and Duties of the
Under Secretary of Commerce for Intellectual Property and
Director of the United States Patent and Trademark Office