From: Keith Yeager <keithyeager@gmail.com>
Sent: Monday, January 2, 2012 3:57 PM CST
To: ahmnondov@hotmail.com
Subject: Re: edrawing files ,
Attachments: eDrawings files.zip

Hi Andy,

Here's all the eDrawings files. The descriptions are included in a word document within the attached zip file. I've also included a new eDrawings for your existing fusion wedge design - let me know if this one works for you. The only thing missing is a description of your fusion wedge design... You mentioned to encompass the pictures in the patent, but I'm not sure what you mean by this. Can you please clarify? Also, you had wanted a general description - is this to be made general to the point of encompassing all these designs?

Best,
Keith

On Sun, Jan 1, 2012 at 3:52 PM, ahmnondov@hotmail.com <ahmnondov@hotmail.com> wrote:

> Proceed as you describe.
>
> Thanks,
>
> Andy
>
> ----- Reply message -----
> From: "Keith Yeager" <keithyeager@gmail.com>
> Date: Sun, Jan 1, 2012 12:14 pm
> Subject: edrawing files ,
> To: "Ahmnon Moskowitz" <ahmnondov@hotmail.com>
>
> Hi Andy,
>
> Is it ok to have two cavities? For most of the designs, I'll have to leave some material in the center of the box for the lead screw to engage. So, instead of one large central hole, you'll have two holes half the size with some material in the center. I can do my best to minimize this central material, but would have to change the design considerable to allow a full opening. Let me know what you'd like.
>
> Best,
> Keith
>
> On Jan 1, 2012, at 11:49 AM, Ahmnon Moskowitz <ahmnondov@hotmail.com> wrote:

> Dear Kieth,
>
>
> My father asked when it possible in these designs to also put in a cavity in the upper and lower cases so bone could fuse directly from one side of the box to the other . (you can look up PLIF boxes)
>
>
>
> thanks,
>
> Andy
>
>
> Date: Thu, 29 Dec 2011 21:35:28 -0500
> Subject: Re: edrawing files ,
> From: keithyeager@gmail.com
> To: ahmnondov@hotmail.com
>
> Hi Andy,
>
> Please see attached with partial and full opening. Also, here's a description modified for consistent terminology.
>
> Best,
> Keith
>
> Scissor-jack description:
> The top and bottom housing are attached by one internal, and two external linkage arms. A lead screw is mounted in the bottom housing and secured in place with a retaining ring. As the lead screw is rotated by an external tool (hex wrench), it causes the linear displacement of the separation block which is hinged to the internal linkage. The horizontal motion of the separation block causes the top and bottom housing pieces to separate vertically. The separation distance depends on the amount of lead screw rotation, and is limited by separation block's freedom to move within the bottom housing.
>
>
>
> On Thu, Dec 29, 2011 at 9:25 PM, Ahmnon Moskowitz <ahmnondov@hotmail.com> wrote:
> dear Kieth,
>
> My father said he saw the image and he would like to see it partially and fully jacked up
>
> also he asked correlate the descriptions with diagrams if that's possible so we know what your talking about

>
> Ill try and get you the C9 files.
>
> thanks,
>
> Andy
>
> Date: Thu, 29 Dec 2011 16:35:30 -0500
>
> Subject: Re: edrawing files ,
> From: keithyeager@gmail.com
> To: ahmnondov@hotmail.com
>
> Hi Andy,
>
> Things are coming along. I'll be able to finish everything by monday. I've attached the first drawing (scissor-jack style) to see if this is what you're looking for. Desription below.
>
> If you have the original solidworks files for the c9 or c10 version (the fusion wedge), then I can add the exploded view to the eDrawings. I'll need the .SLDPRT and .SLDASM files (not EASM) to do this.
>
> Let me know if this is what you'd like, and I'll do the other parts the same way.
>
> Best,
> Keith
>
>
> Scissor-jack description:
> The top and bottom housing are attached by one internal, and two external linkage arms. A lead screw is mounted in the bottom housing and secured in place with a retaining ring. As the lead screw is rotated by an external tool (hex wrench), it causes the linear displacement of the separation block which is hinged to the internal linkage. The horizontal motion of the separation block causes the top and bottom housing pieces to separate vertically. The separation distance depends on the amount of lead screw rotation, and is limited by separation block's freedom to move within the bottom housing.
>
>
>
>
>
> On Thu, Dec 29, 2011 at 1:31 PM, Ahmnon Moskowitz <ahmnondov@hotmail.com> wrote:
> Hey Kieth,
>
> how is everything going, Please let me know the timeframe and such? the semester ended.
>

> Thanks,
>
> Andy
>
> Date: Tue, 13 Dec 2011 10:37:02 -0500
> Subject: Re: edrawing files , pleaseu update?
> From: keithyeager@gmail.com
> To: ahmnondov@hotmail.com
>
> Hi Andy,
>
> In progress but slow, since my time is sparse due to the end of semester workload. Almost over! Should be progressing nicely soon. Will keep you posted.
>
> Best,
> Keith
>
>
> On Mon, Dec 12, 2011 at 10:45 AM, Ahmnon Moskowitz <ahmnondov@hotmail.com> wrote:
> Dear Kieth,
>
> How is everything going? please update me?
>
> Thanks,
> Andy
>
>
> Date: Mon, 28 Nov 2011 10:16:38 -0500
> Subject: Re: edrawing files
> From: keithyeager@gmail.com
> To: ahmnondov@hotmail.com
>
> Ok, thanks. I'll begin this work this week.
> Best,
> Keith
>
> On Mon, Nov 28, 2011 at 10:07 AM, Ahmnon Moskowitz <ahmnondov@hotmail.com> wrote:
> I forgot to tell you the name of the mechanism in the primary device is “set screw” I don’t think you should use that term but just descriptions that would describe its working in a general way that would help encapsulate our devices both the new one and one from our older patent . Also it would be better not to look at the descriptions there since we did not describe our device relative to a set screw, and other descriptions of the device if you think it appropriate.
>

> Thanks,
>
> Andy.
>
>
> Date: Thu, 17 Nov 2011 17:03:12 -0500
>
> Subject: Re: edrawing files
> From: keithyeager@gmail.com
> To: ahmnondov@hotmail.com
>
> Ok, thanks. I'll have to begin after next week, as I am traveling until the 27th.
>
> Best,
> Keith
>
> On Thu, Nov 17, 2011 at 3:44 PM, Ahmnon Moskowitz <ahmnondov@hotmail.com> wrote:
> I'll send you what I have for the files. I think it is the same as c9 c10 let me know if this will help or if you will need the solidworks.
> The patent that we are extending is 7,942,903. It has an expandable box somewhat similar to our primary box (c9,c10) The mechanism is similar. Don't look at any of the words just base it on the similarity of the expandable mechanism, you can be vague you don't need to be specific of the mechanics of how it expands. We didn't file a patent for the others yet.
>
> Thanks,
>
> Andy
>
>
> Date: Thu, 17 Nov 2011 11:33:26 -0500
>
> Subject: Re: edrawing files
> From: keithyeager@gmail.com
> To: ahmnondov@hotmail.com
>
> Hi Andy,
>
> Did you have additional files for the c10 and c11? Or only the two you sent? Is there a particular date you need everything by?
>
> Can you send me the patent that was filed? That would be helpful if you want things described consistently.
>
> Thanks,
> Keith
>

> On Thu, Nov 17, 2011 at 9:20 AM, Ahmnon Moskowitz <ahmnondov@hotmail.com> wrote:
>
> Dear Kieth
>
> With the C9 and C10 my brother said he can not expand it properly like a normal edrawing when he want to put it on paper (for the patent) . This may take some tinkering with the software, I think I have the solidworks I will have to check if you need it.
>
>
> What we need is 1) the edrawings in proper format and 2) the explanations. We don't have any need for the animations as of now. That might change in the future.
> So $1600 total. in addition the tinkering of the software of C9 C10 and a mechanical explanation of the drawings (C9 and C10) . That is the most important explanation since it is a prime design and based on a predicate version i think it might have some things in common with the others .
> If you agree to those 2 additional amendments you can begin.
>
>
>
> Thanks,
>
> Andy
>
>
>
>
>
>
> Date: Wed, 16 Nov 2011 16:49:21 -0500
> Subject: Re: edrawing files
> From: keithyeager@gmail.com
> To: ahmnondov@hotmail.com
>
>
> Hi Andy,
>
> They opened, thanks. These are interesting. I have a couple questions. The c10 and c11 are already in eDrawings format in the files you sent, so its not clear what else you need for that part.
>
> The illustrations on pages 6 through 10 will take some time to model in 3D (eDrawings). I've put some numbers below. Additionally, I can animate the mechanics of the device and make a video of each device expanding. Let me know if you'd be interested in that too.
>
> Best,
> Keith

>
>
> For 3D renderings of 6-10, (5 models)
> $1,400
>
> Descriptions for all 5
> $200
>
> Animations for all 5
> $400
>
>
>
>
> On Wed, Nov 16, 2011 at 1:40 PM, Ahmnon Moskowitz <ahmnondov@hotmail.com> wrote:
> Dear Kieth,
>
> Were you able to open the files?
> Do you think making them edrawings will be a problem (there would be no need to make any changes or do any dimensions or tolerances) ?
> Also you don't need to do any descriptions if you don't want to. I just thought it better to have an added perspective. Let me know if you want to do this or not? How much you would want? Or would you perfer mr to make an offer?
>
>
> Best regards,
>
> Andy
>
>
>
>
>
>
>

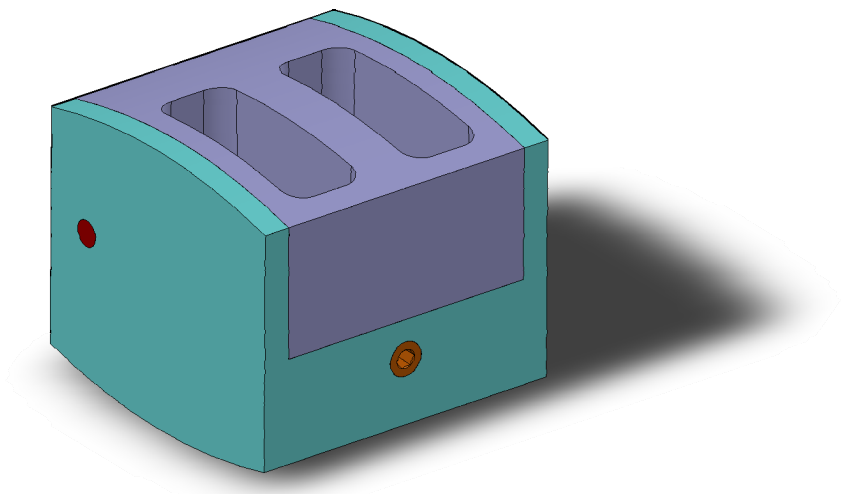

SOLIDWORKS Educational Product. For Instructional Use Only.

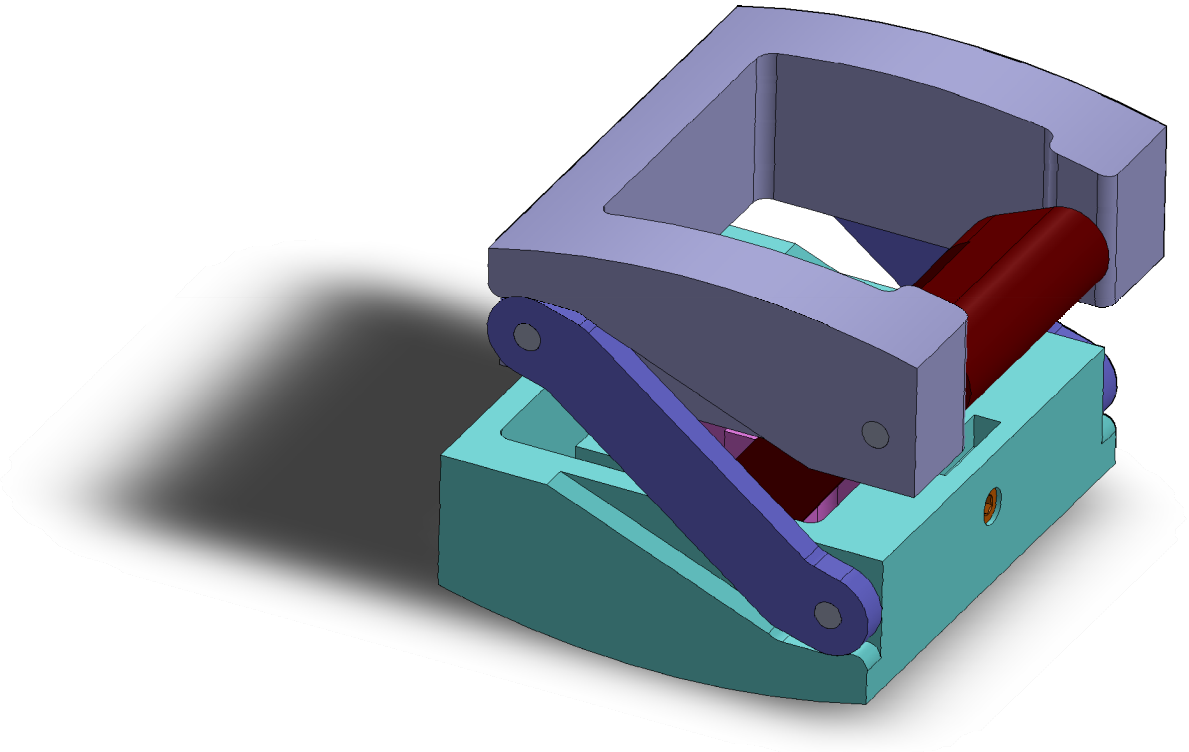

SOLIDWORKS Educational Product. For Instructional Use Only.

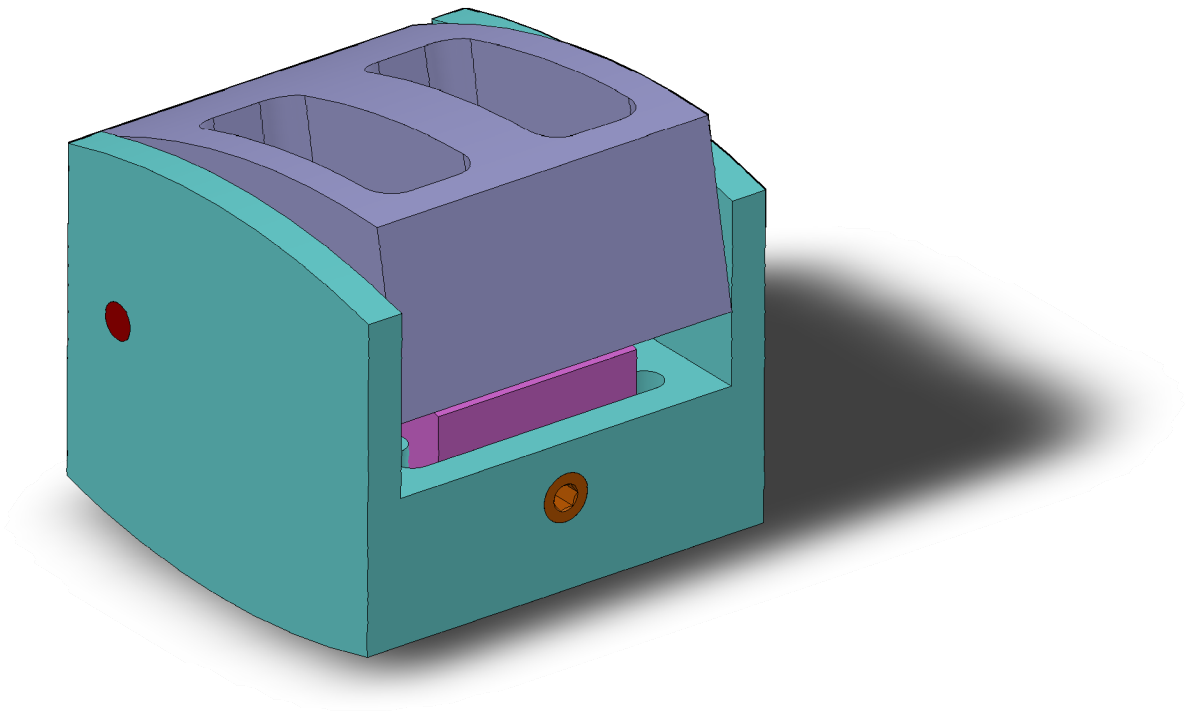

SOLIDWORKS Educational Product. For Instructional Use Only.

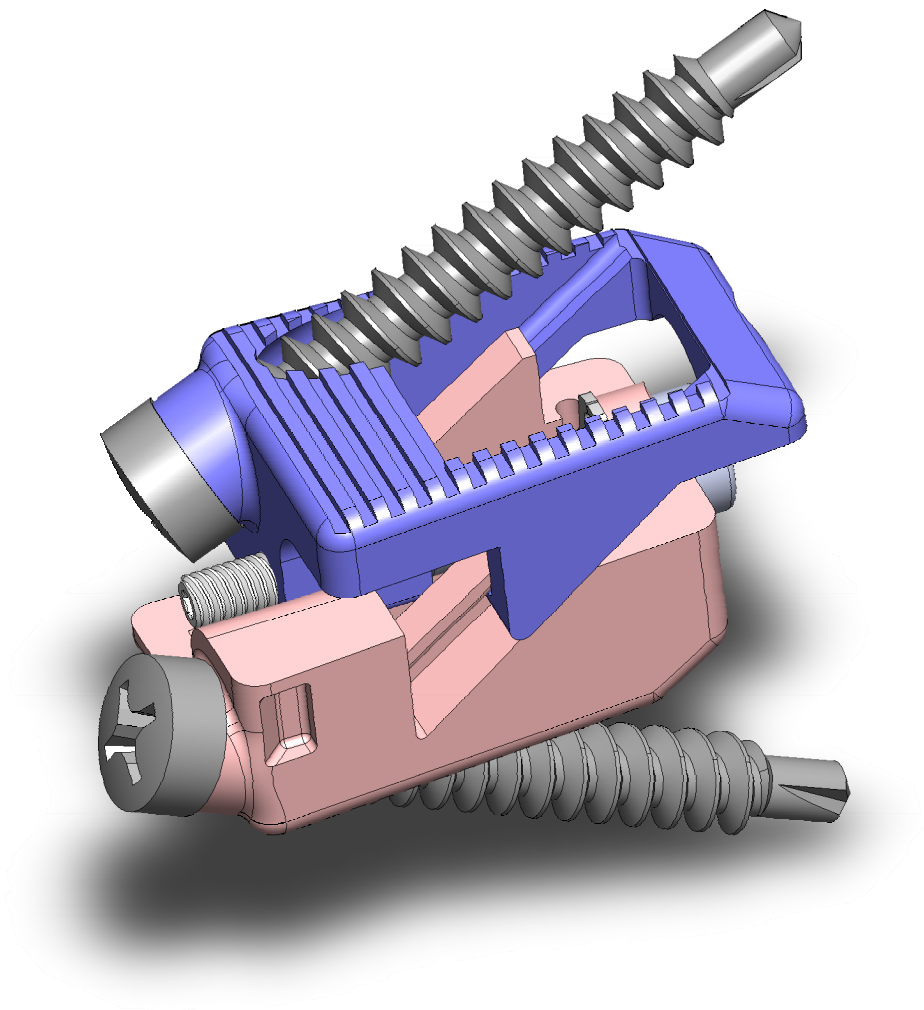

SOLIDWORKS Educational Product. For Instructional Use Only.

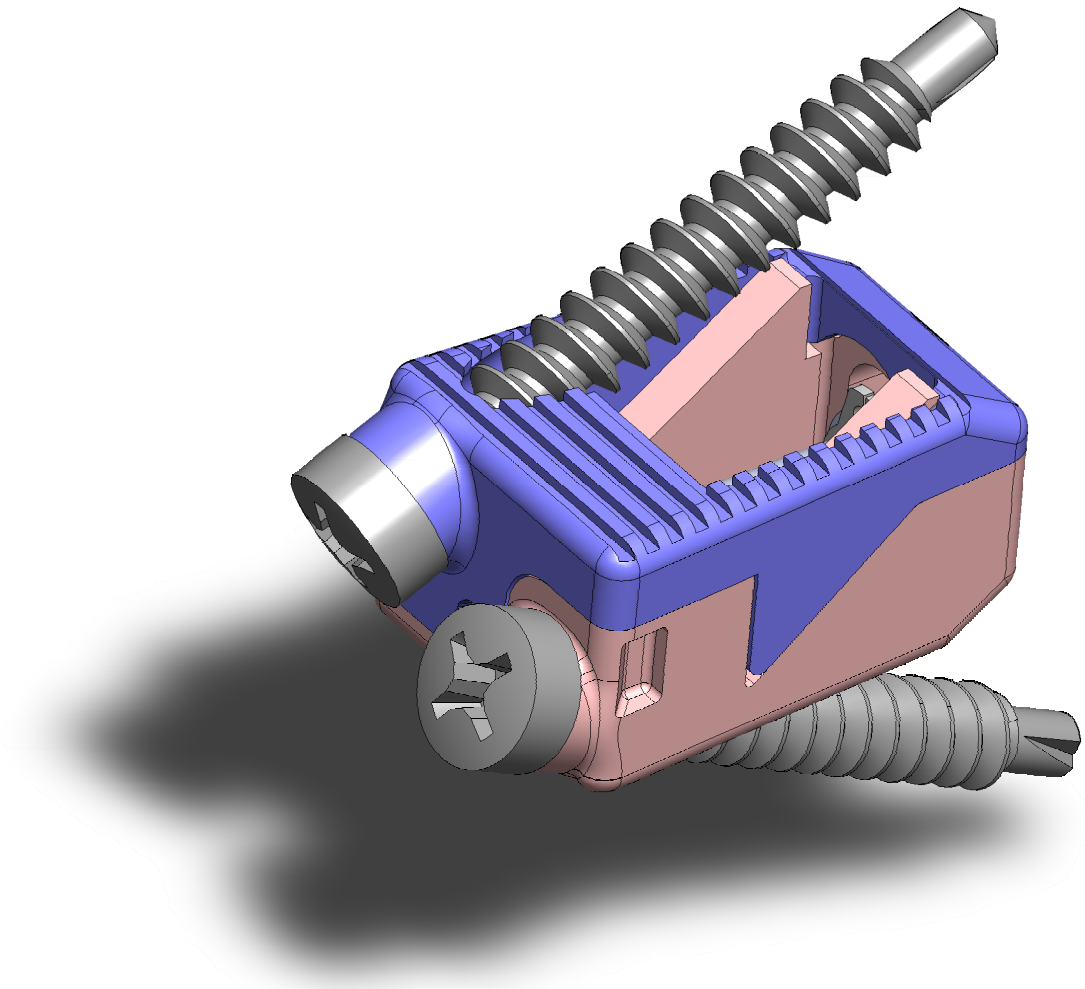

SOLIDWORKS Educational Product. For Instructional Use Only.

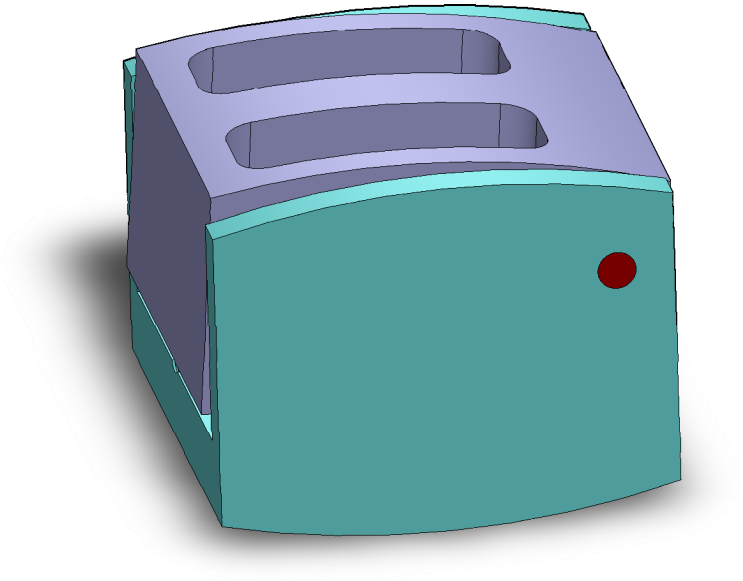

SOLIDWORKS Educational Product. For Instructional Use Only.

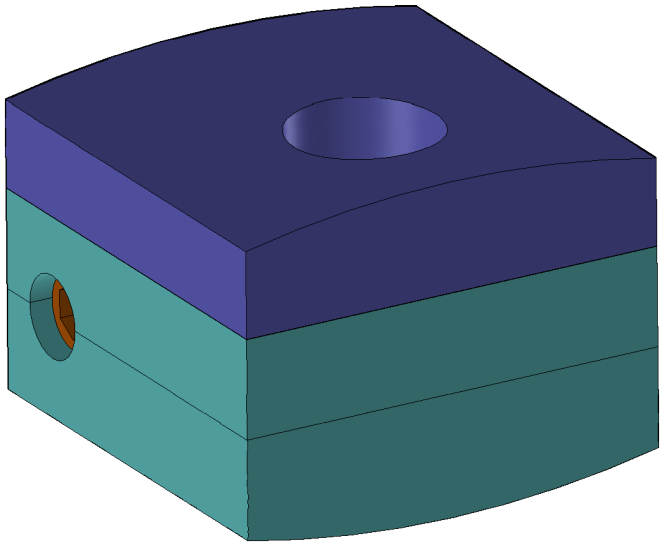

SOLIDWORKS Educational Product. For Instructional Use Only.

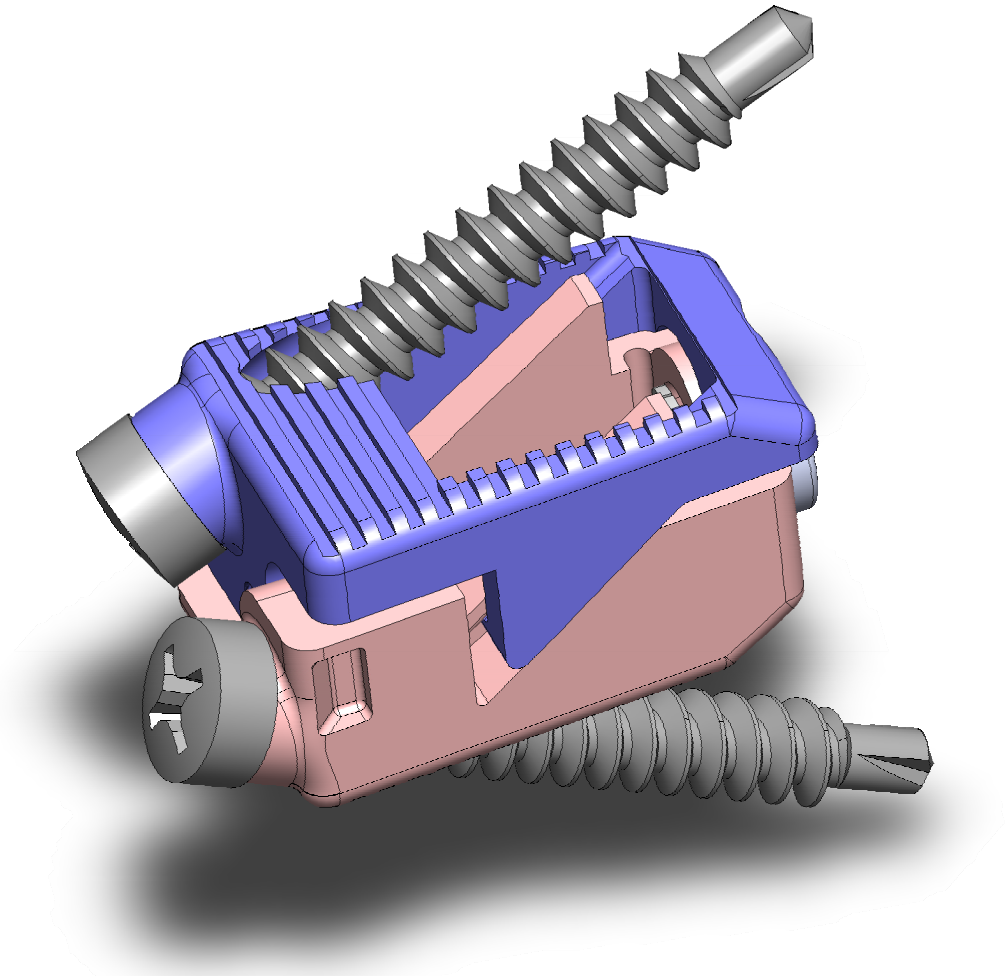

SOLIDWORKS Educational Product. For Instructional Use Only.

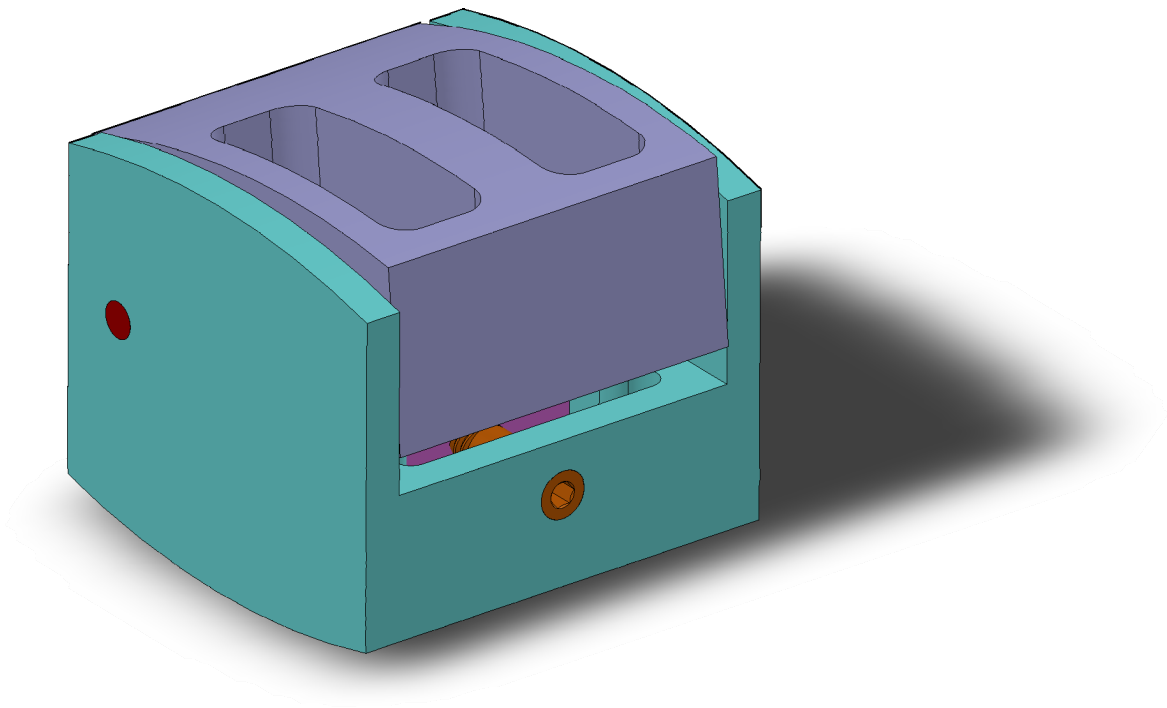

SOLIDWORKS Educational Product. For Instructional Use Only.

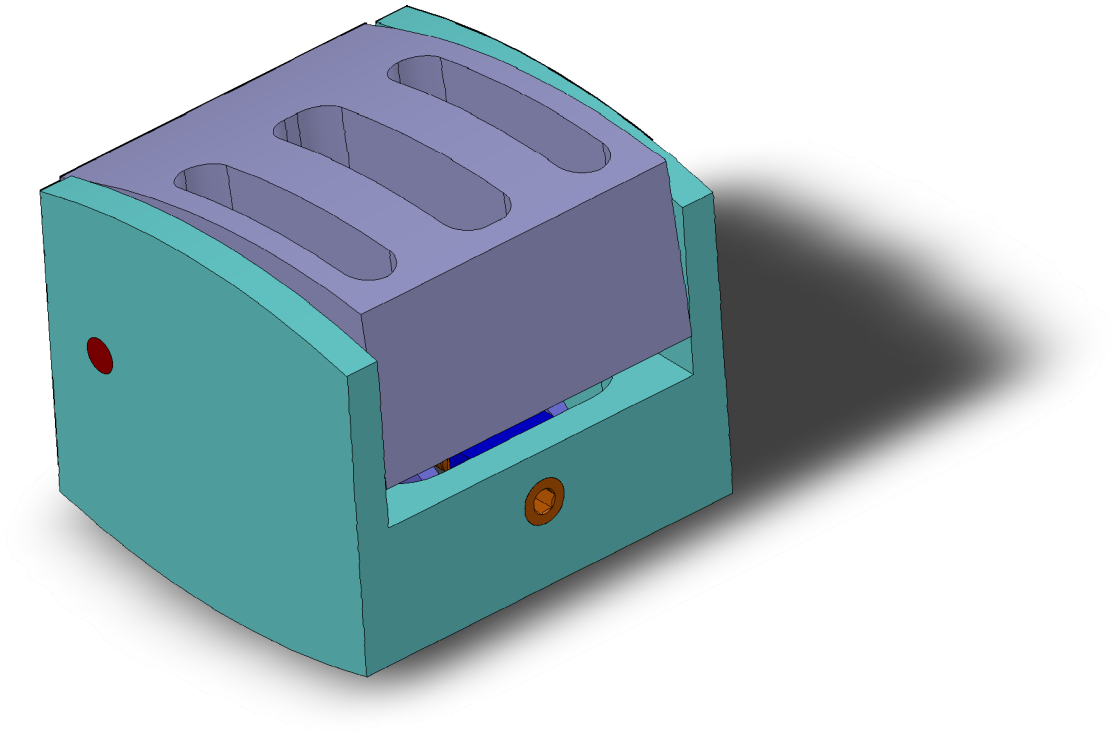

SOLIDWORKS Educational Product. For Instructional Use Only.

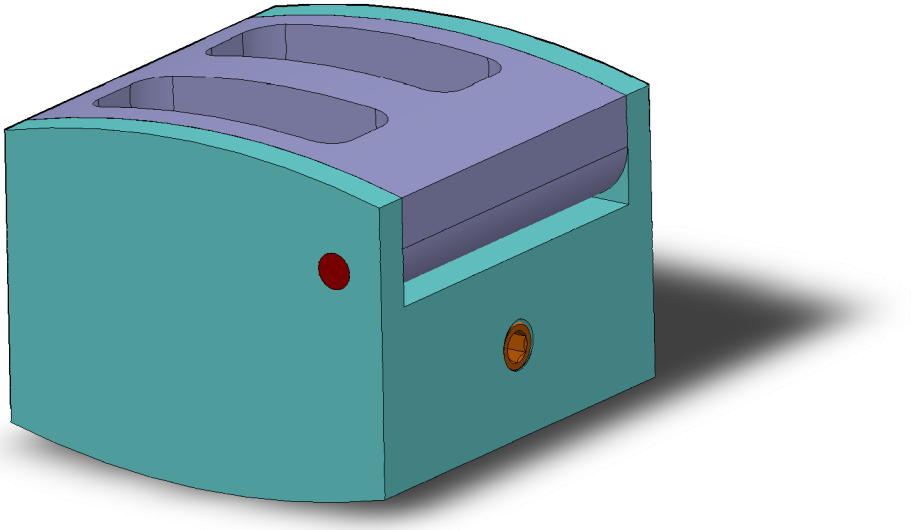

SOLIDWORKS Educational Product. For Instructional Use Only.

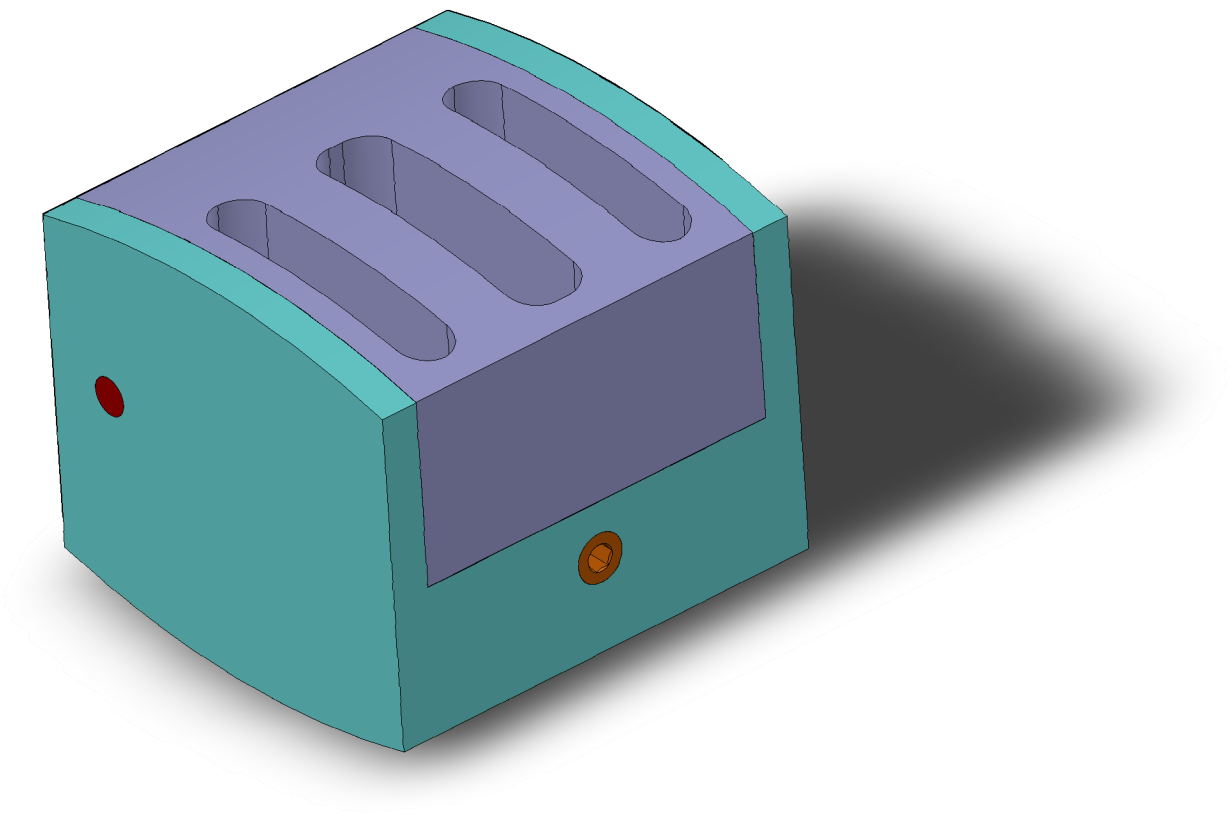

SOLIDWORKS Educational Product. For Instructional Use Only.

Scissor-jack description:

The top and bottom housing are attached by one internal, and two external linkage arms. A lead screw is mounted in the bottom housing and secured in place with a retaining ring. As the lead screw is rotated by an external tool (hex wrench), it causes the linear displacement of the separation block which is hinged to the internal linkage. The horizontal motion of the separation block causes the top and bottom housing pieces to separate vertically. The separation distance depends on the amount of lead screw rotation, and is limited by separation block's freedom to move within the bottom housing.

Tapered threads description:

The top and bottom housing are attached by two pins which allow rotation relative to each other about the axis of the pins. The bottom housing contains a mount for the rotation screw, which can control the relative angular orientation of the two housing pieces. As the screw is rotated by an external tool (hex wrench), it engages the internal teeth of the top housing and acts as a wedge to rotate the top away from the bottom housing piece.

Drywall anchor description:

The top and bottom housing are attached by two pins which allow rotation relative to each other about the axis of the pins. The bottom housing contains a mount for the lead screw, which can control the relative angular orientation of the two housing pieces. The lead screw is secured with two retaining rings. As the screw is rotated by an external tool (hex wrench), it causes lateral motion of a translation nut, which is attached to a two-bar linkage to a second nut fixed to the bottom housing. As the translation nut moves, the linkage extends outside of the bottom housing, pushing against the top housing. The linkage may be replaced by a solid material such as spring steel which can bend to produce the same effect.

Modified wedge description:

The top and bottom housing are attached by two pins which allow rotation relative to each other about the axis of the pins. The bottom housing contains a mount for the lead screw, which can control the relative angular orientation of the two housing pieces. The lead screw is secured with two retaining rings. As the screw is rotated by an external tool (hex wrench), it causes lateral motion of a wedge-shaped translation nut. The nut engages the inner tapered surface of the top housing and forces the top housing piece to rotate away from the bottom housing.

Worm drive description:

The worm drive design allows the user to rotate a worm gear with an external tool (hex wrench) to control the translation of the top housing relative to the bottom housing. The worm gear engages a spur gear which has internal threading that couples it to the top housing. The top housing has four pins which extend into the bottom housing. These pins prevent the top housing from rotating with the spur gear, and constrain it to translate linearly. The bottom housing is comprised of two halves to secure the worm and spur gears in place. Retaining rings are also used to secure the worm gear and the spur gear.

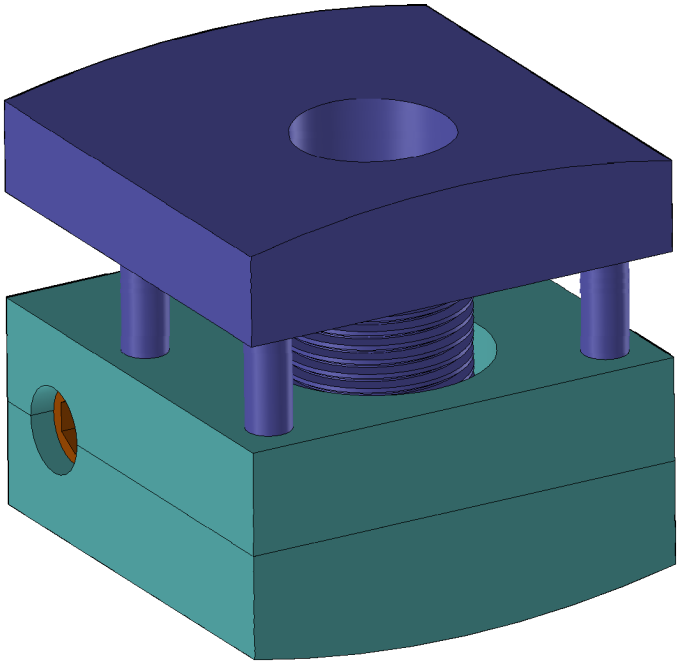

SOLIDWORKS Educational Product. For Instructional Use Only.

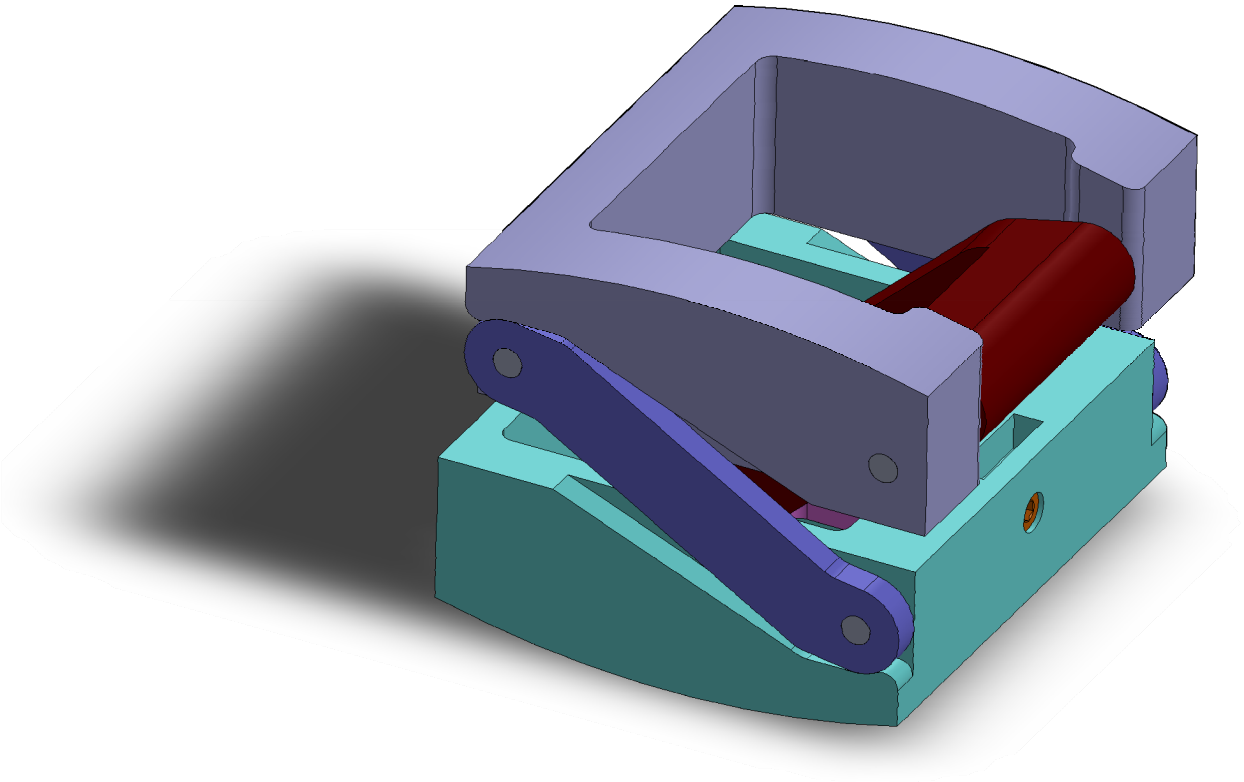

SOLIDWORKS Educational Product. For Instructional Use Only.

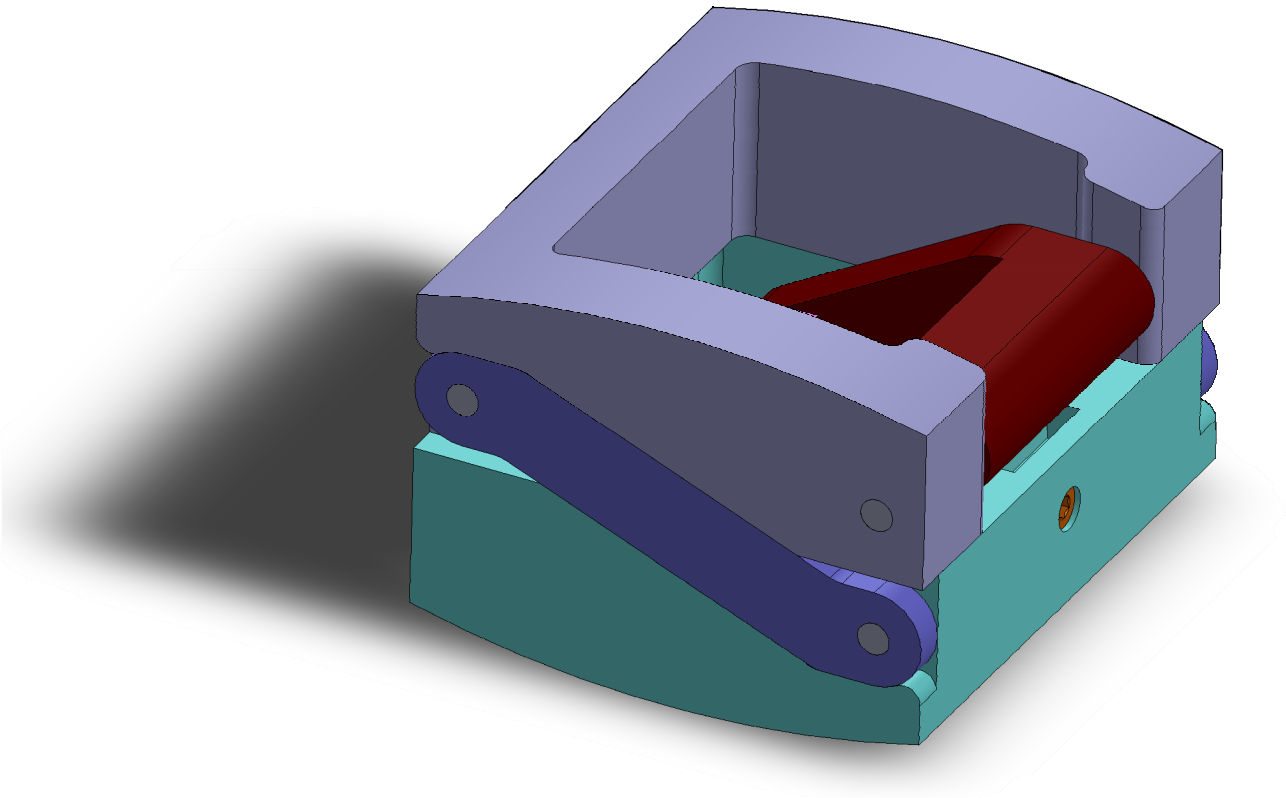

SOLIDWORKS Educational Product. For Instructional Use Only.

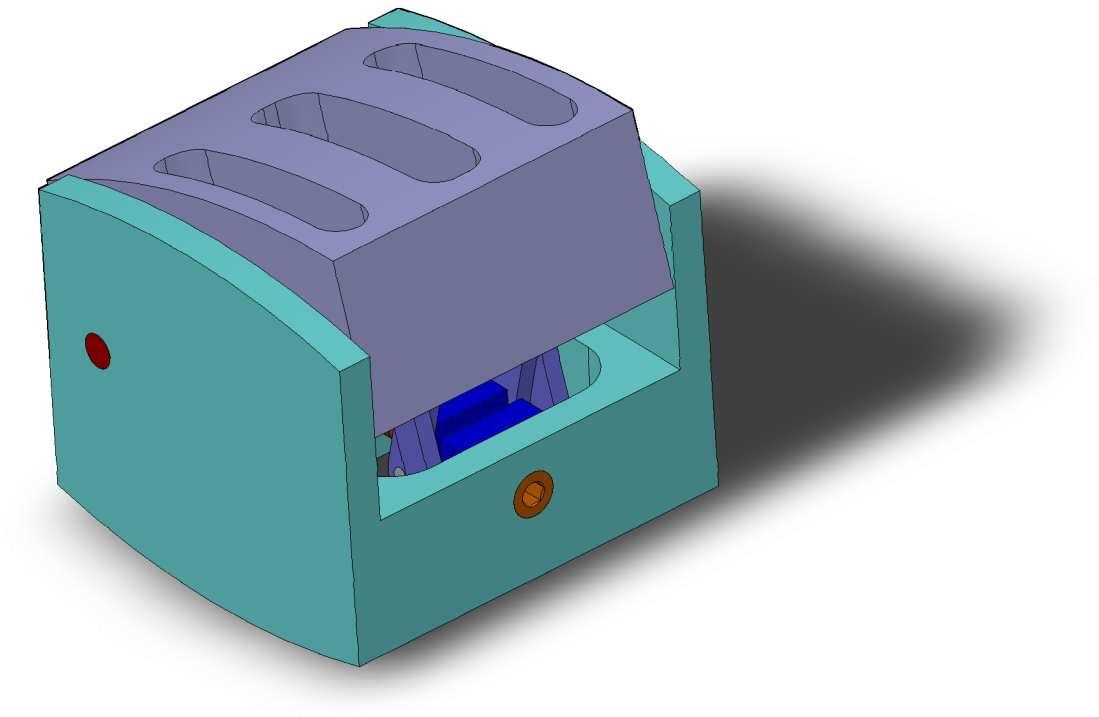

SOLIDWORKS Educational Product. For Instructional Use Only.

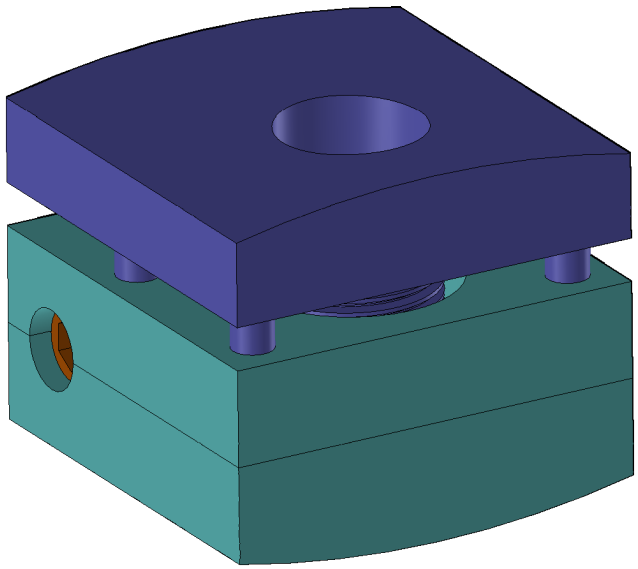

SOLIDWORKS Educational Product. For Instructional Use Only.