US 20190146500A1

(19) United States
(12) Patent Application Publication
Yalla et al.
(10) Pub. No.: US 2019/0146500 A1
(43) Pub. Date: May 16, 2019

(54) **VEHICLE SELF-LOCALIZATION USING PARTICLE FILTERS AND VISUAL ODOMETRY**

(71) Applicant: **NIO USA, Inc.**, San Jose, CA (US)

(72) Inventors: **Veera Ganesh Yalla**, Sunnyvale, CA (US); **Sathya Narayanan Kasturi Rangan**, San Jose, CA (US); **Davide Bacchet**, Campbell, CA (US)

(21) Appl. No.: **16/246,810**

(22) Filed: **Jan. 14, 2019**

Related U.S. Application Data

(63) Continuation-in-part of application No. 15/798,016, filed on Oct. 30, 2017.

(60) Provisional application No. 62/616,581, filed on Jan. 12, 2018.

Publication Classification

(51) **Int. Cl.**

G05D 1/00	(2006.01)
H03H 17/04	(2006.01)
G06F 16/13	(2006.01)
G06F 17/16	(2006.01)

(52) **U.S. Cl.**

CPC ***G05D 1/0088*** (2013.01); ***H03H 17/04*** (2013.01); *H03H 17/0211* (2013.01); ***G06F 17/16*** (2013.01); *G05D 2201/0213* (2013.01); ***G06F 16/13*** (2019.01)

(57) **ABSTRACT**

Methods and systems herein can let an autonomous vehicle localize itself precisely and in near real-time in a digital map using visual place recognition. Commercial GPS solutions used in the production of autonomous vehicles generally have very low accuracy. For autonomous driving, the vehicle may need to be able to localize in the map very precisely, for example, within a few centimeters. The method and systems herein incorporate visual place recognition into the digital map and localization process. The roadways or routes within the map can be characterized as a set of nodes, which can be augmented with feature vectors that represent the visual scenes captured using camera sensors. These feature vectors can be constantly updated on the map server and then provided to the vehicles driving the roadways. This process can help create and maintain a diverse set of features for visual place recognition.

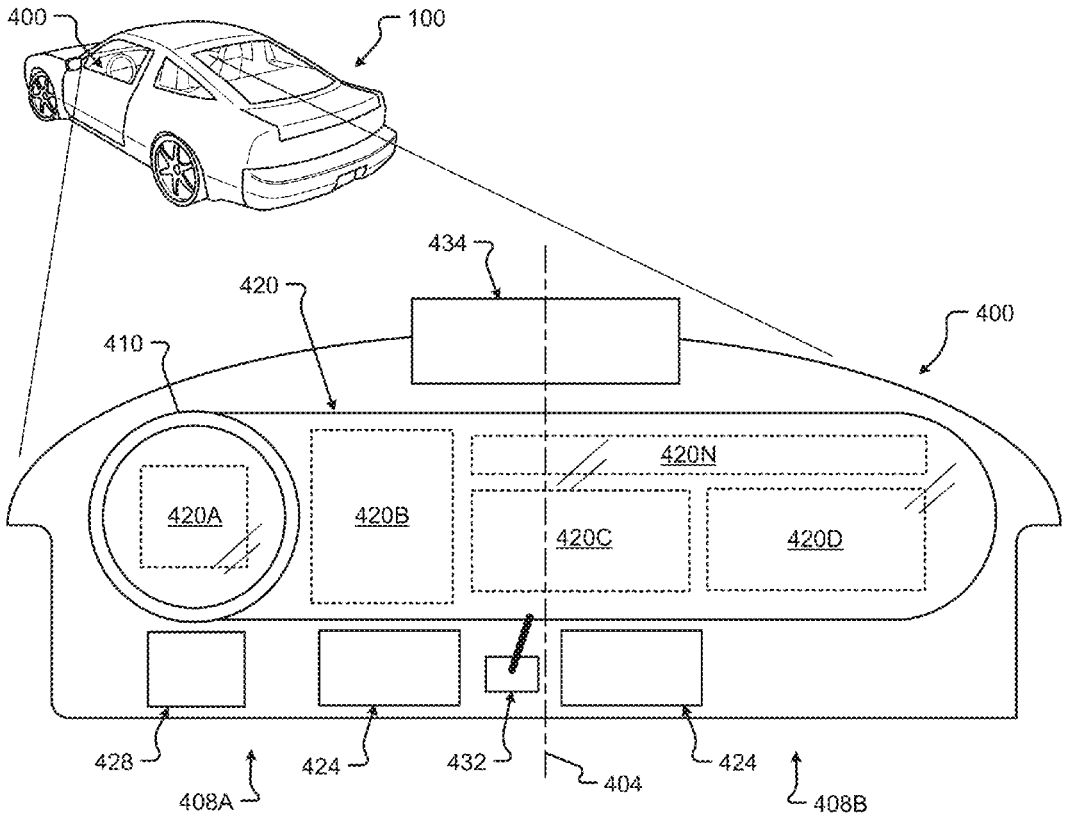

TESLA-1016

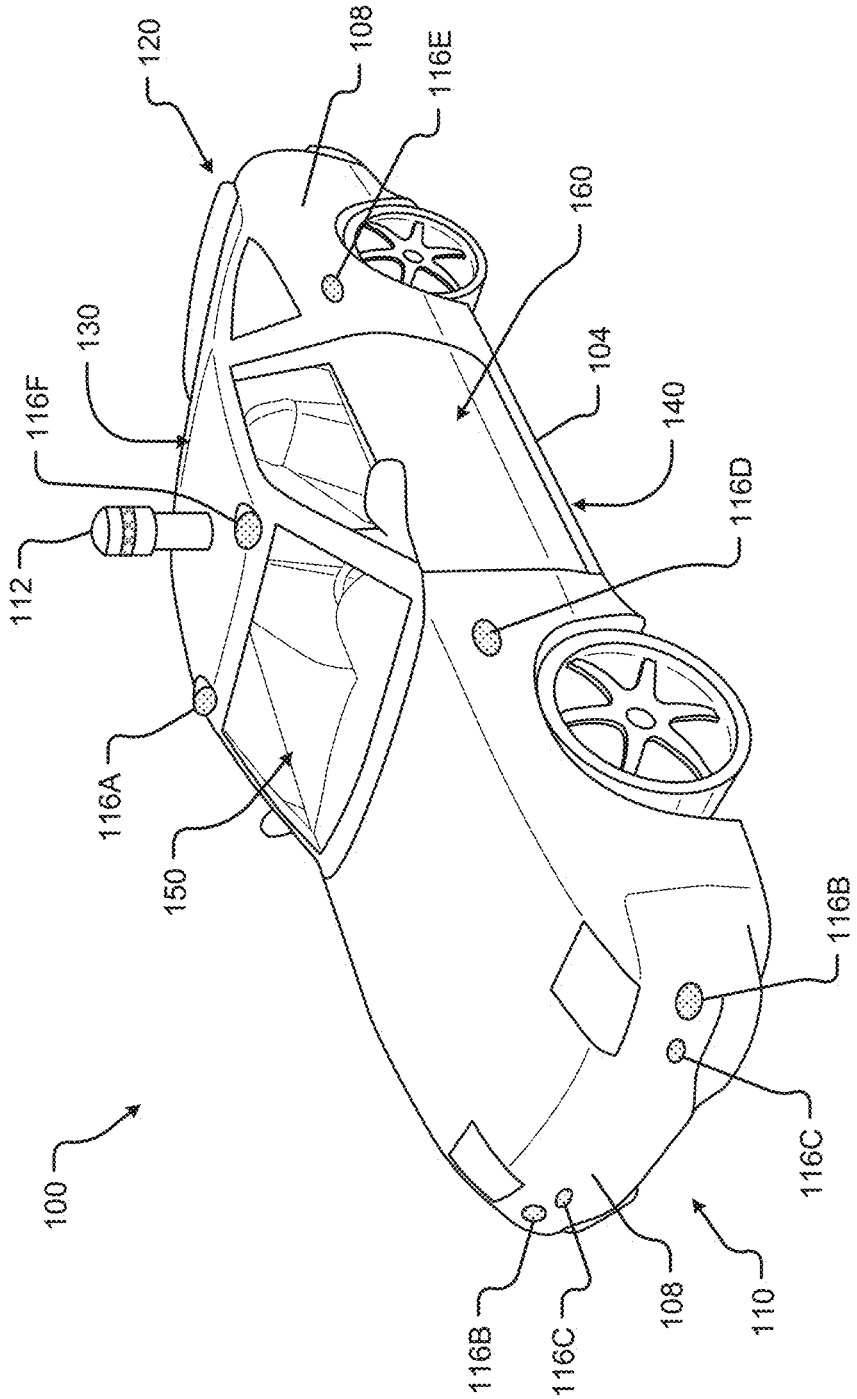
100
112
116F
130
120
108
116E
160
104
140
116D
116A
150
116B
116C
108
110
116B
116C

Fig. 1

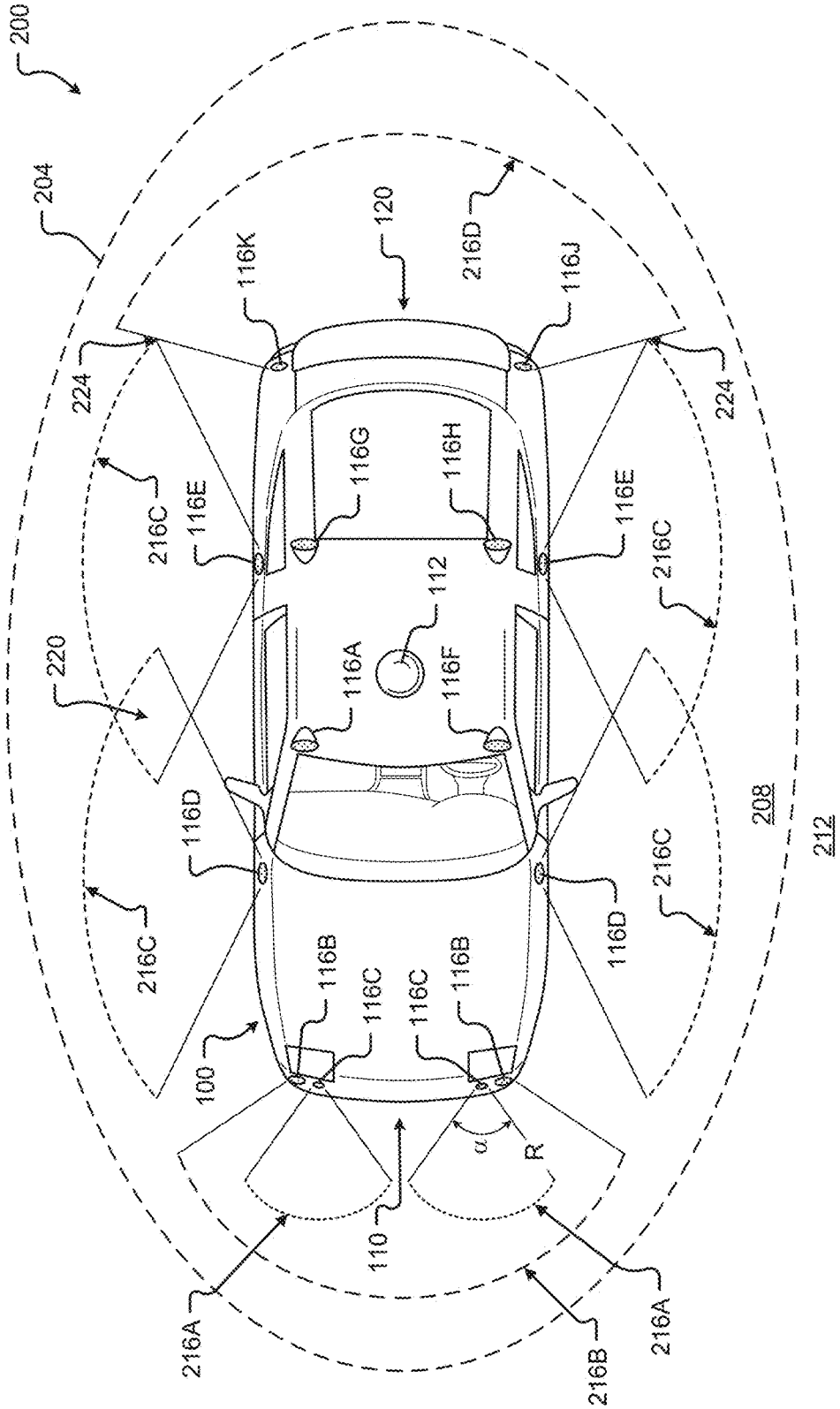
200
204
120
216D
116K
116J
224
224
116G
116H
216C
116E
116E
216C
112
220
116A
116F
116D
216C
216C
116D
208
212
116B
116C
116C
116B
100
α
R
110
216A
216A
216B

Fig. 2

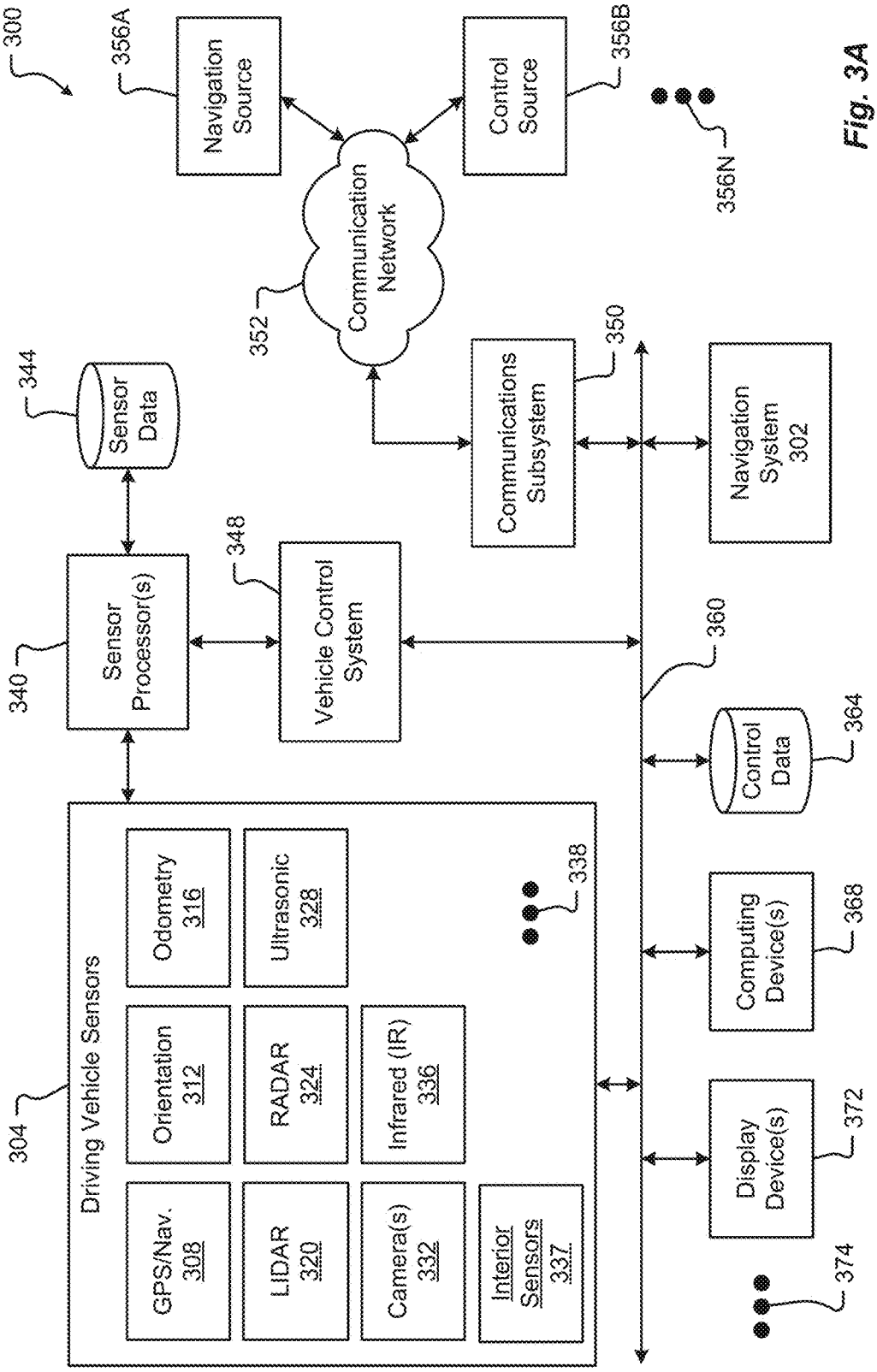
300
356A
Navigation Source
Control Source
356B
356N
Communication Network
352
344
Sensor Data
Communications Subsystem
350
Navigation System 302
348
Sensor Processor(s)
340
Vehicle Control System
360
Control Data
364
Driving Vehicle Sensors
304
Odometry 316
Ultrasonic 328
338
Orientation 312
RADAR 324
Infrared (IR) 336
GPS/Nav. 308
LIDAR 320
Camera(s) 332
Interior Sensors 337
Computing Device(s)
368
Display Device(s)
372
374

Fig. 3A

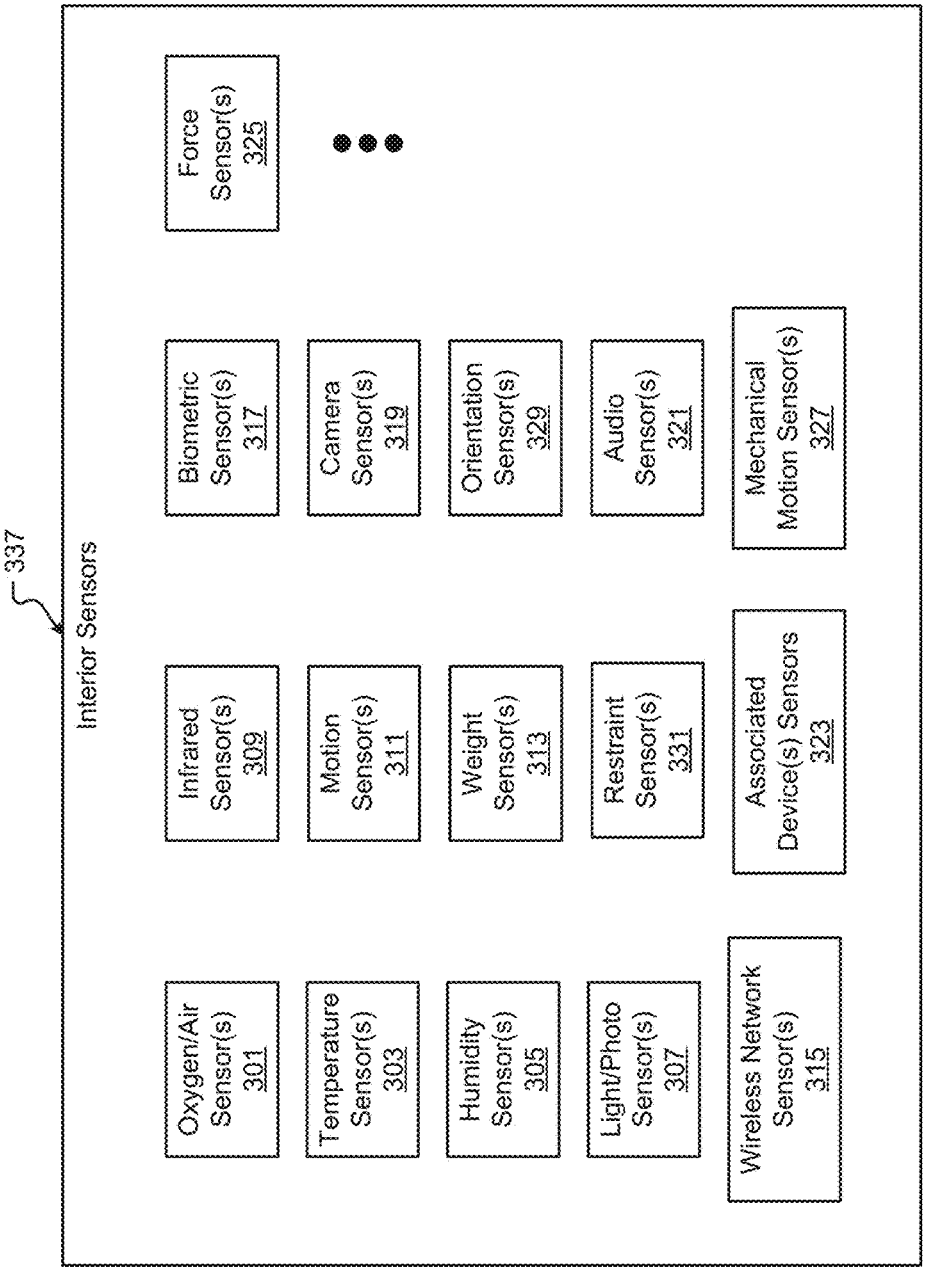
337
Interior Sensors
Oxygen/Air Sensor(s) 301
Temperature Sensor(s) 303
Humidity Sensor(s) 305
Light/Photo Sensor(s) 307
Wireless Network Sensor(s) 315
Infrared Sensor(s) 309
Motion Sensor(s) 311
Weight Sensor(s) 313
Restraint Sensor(s) 331
Associated Device(s) Sensors 323
Biometric Sensor(s) 317
Camera Sensor(s) 319
Orientation Sensor(s) 329
Audio Sensor(s) 321
Mechanical Motion Sensor(s) 327
Force Sensor(s) 325

Fig. 3B

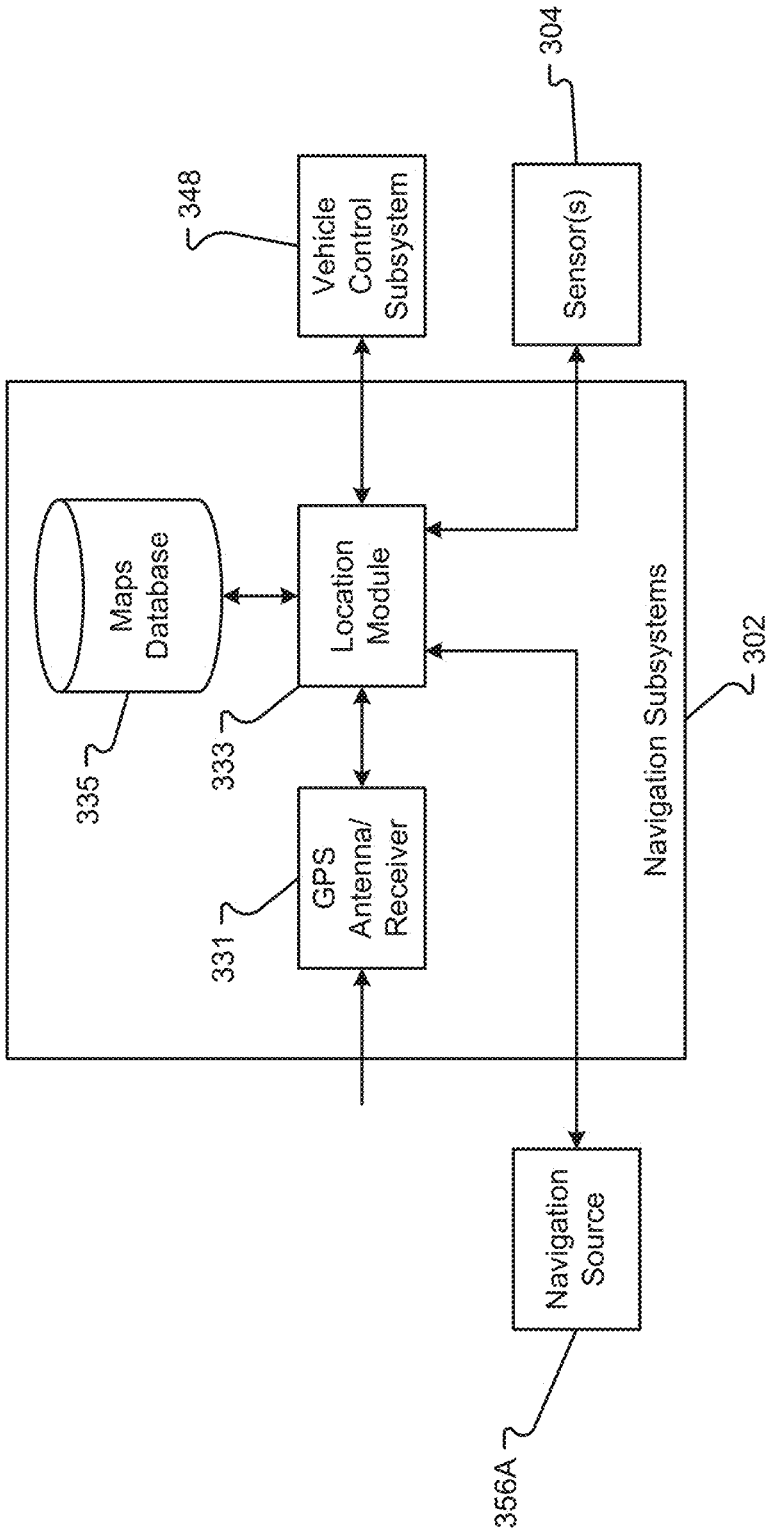
Vehicle Control Subsystem
348
Sensor(s)
304
Maps Database
335
Location Module
333
GPS Antenna/ Receiver
331
Navigation Subsystems
302
Navigation Source
356A

Fig. 3C

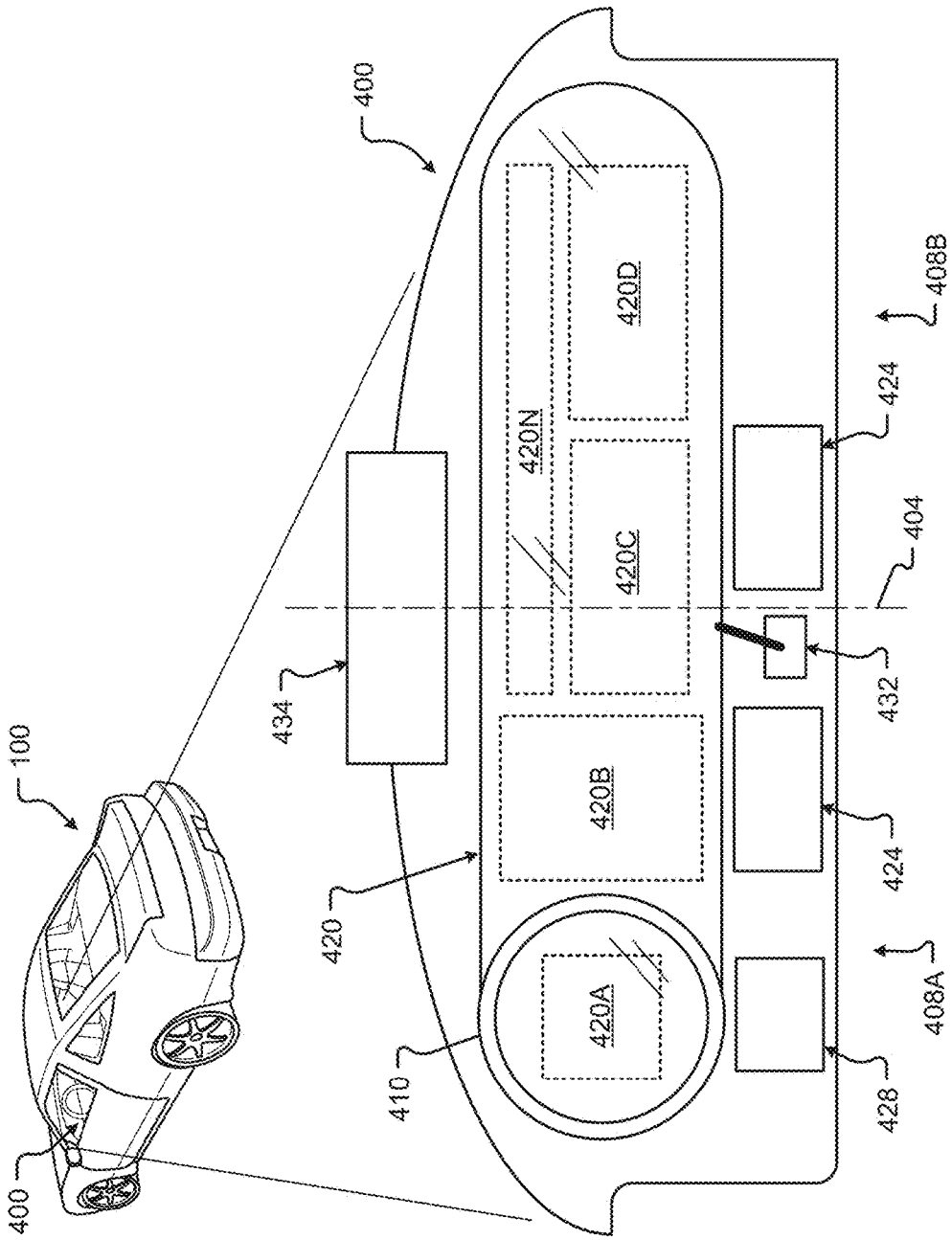
400
100
400
434
420
410
420A
420B
420C
420N
420D
408A
408B
424
424
428
432
404

Fig. 4

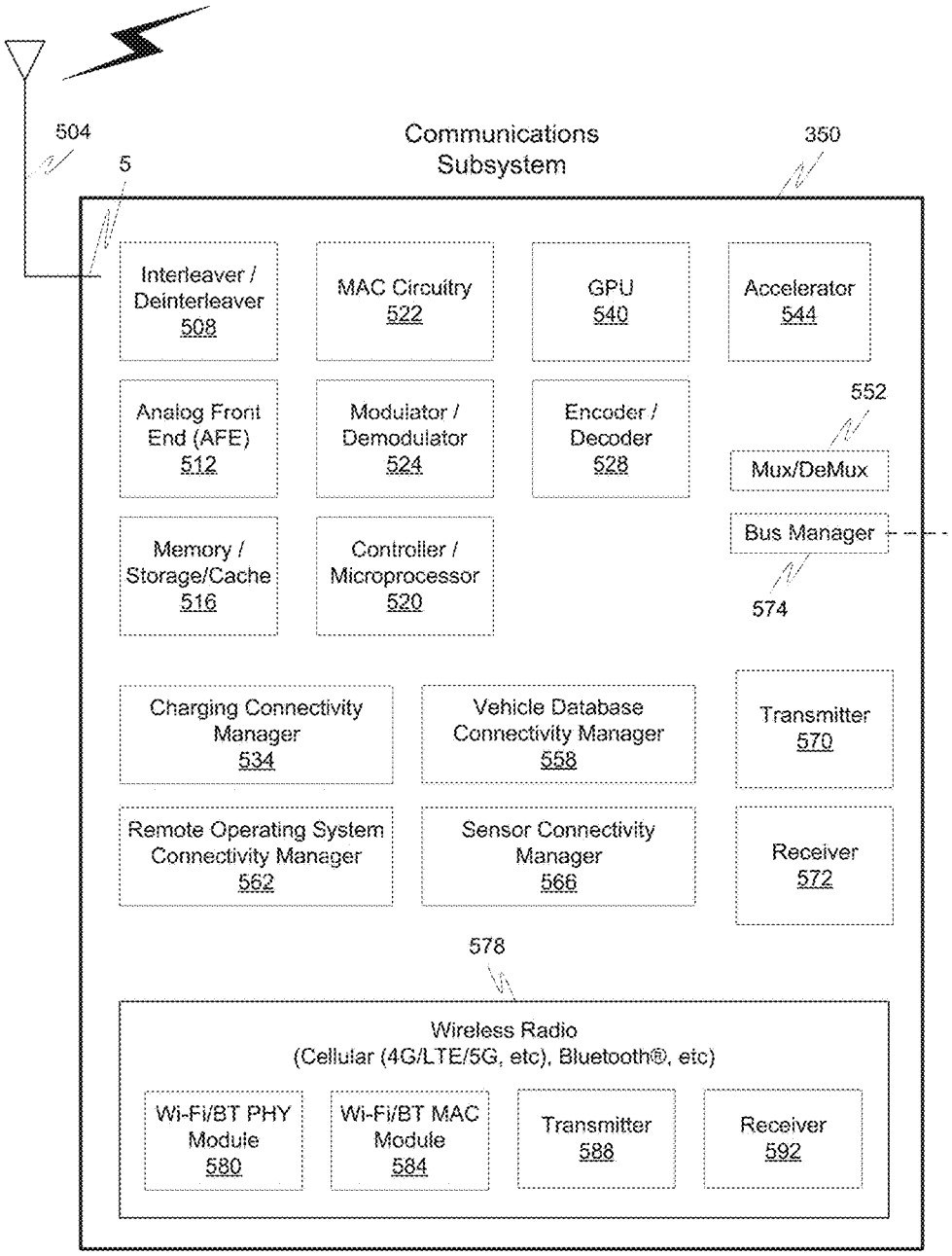
504
5
Communications Subsystem
350
Interleaver / Deinterleaver 508
MAC Circuitry 522
GPU 540
Accelerator 544
Analog Front End (AFE) 512
Modulator / Demodulator 524
Encoder / Decoder 528
552
Mux/DeMux
Memory / Storage/Cache 516
Controller / Microprocessor 520
Bus Manager
574
Charging Connectivity Manager 534
Vehicle Database Connectivity Manager 558
Transmitter 570
Remote Operating System Connectivity Manager 562
Sensor Connectivity Manager 566
Receiver 572
578
Wireless Radio
(Cellular (4G/LTE/5G, etc), Bluetooth®, etc)
Wi-Fi/BT PHY Module 580
Wi-Fi/BT MAC Module 584
Transmitter 588
Receiver 592

Fig. 5

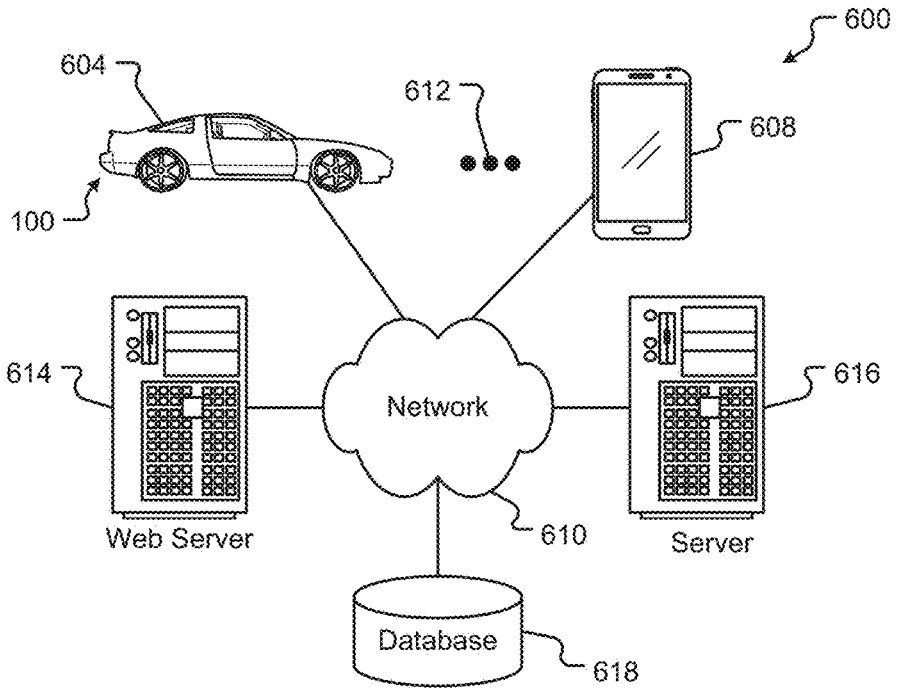
600
604
612
608
100
614
Network
616
Web Server
610
Server
Database
618

Fig. 6

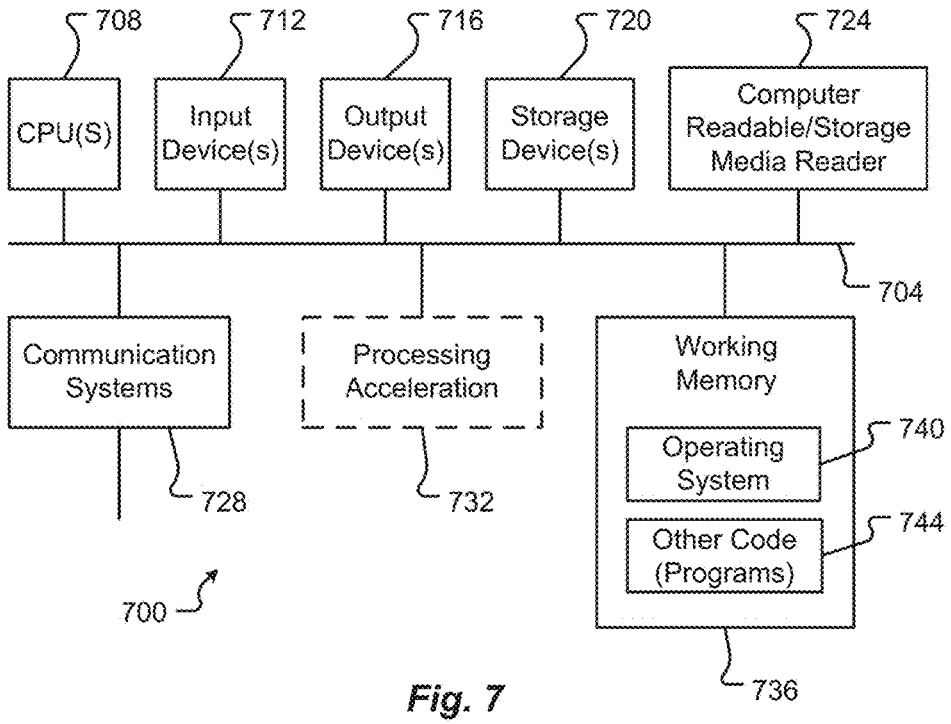
708
712
716
720
724
CPU(S)
Input Device(s)
Output Device(s)
Storage Device(s)
Computer Readable/Storage Media Reader
704
Communication Systems
Processing Acceleration
Working Memory
740
Operating System
744
Other Code (Programs)
728
732
700
736

Fig. 7

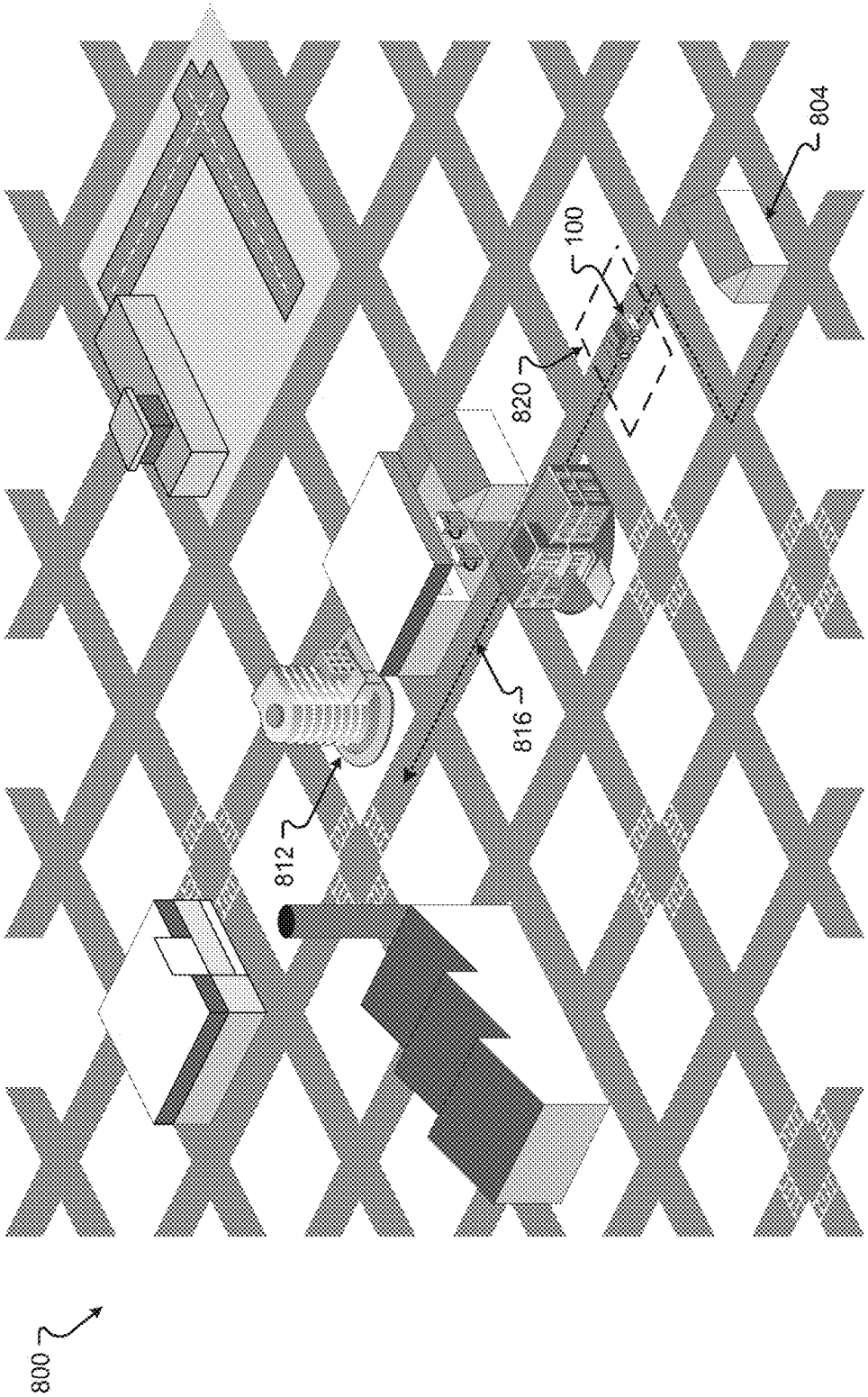

Fig. 8A

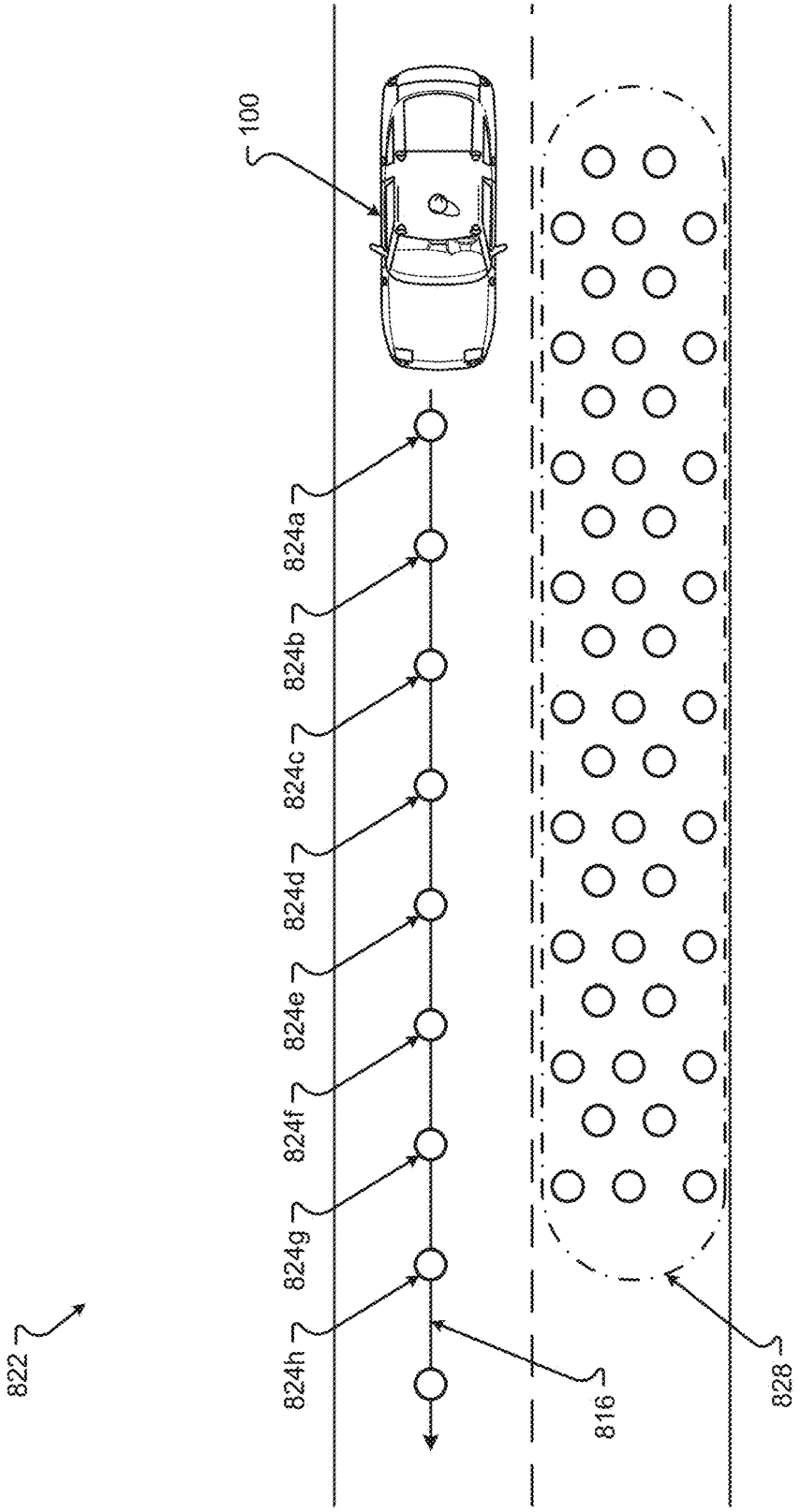

Fig. 8B

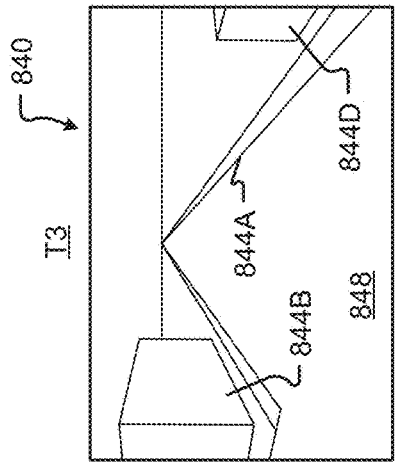

Fig. 8E

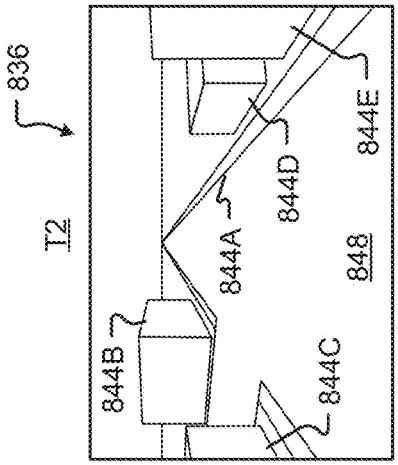

Fig. 8D

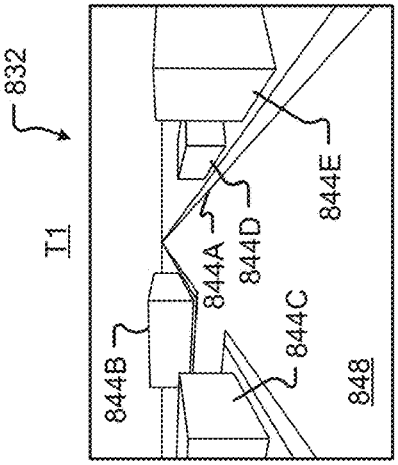

Fig. 8C

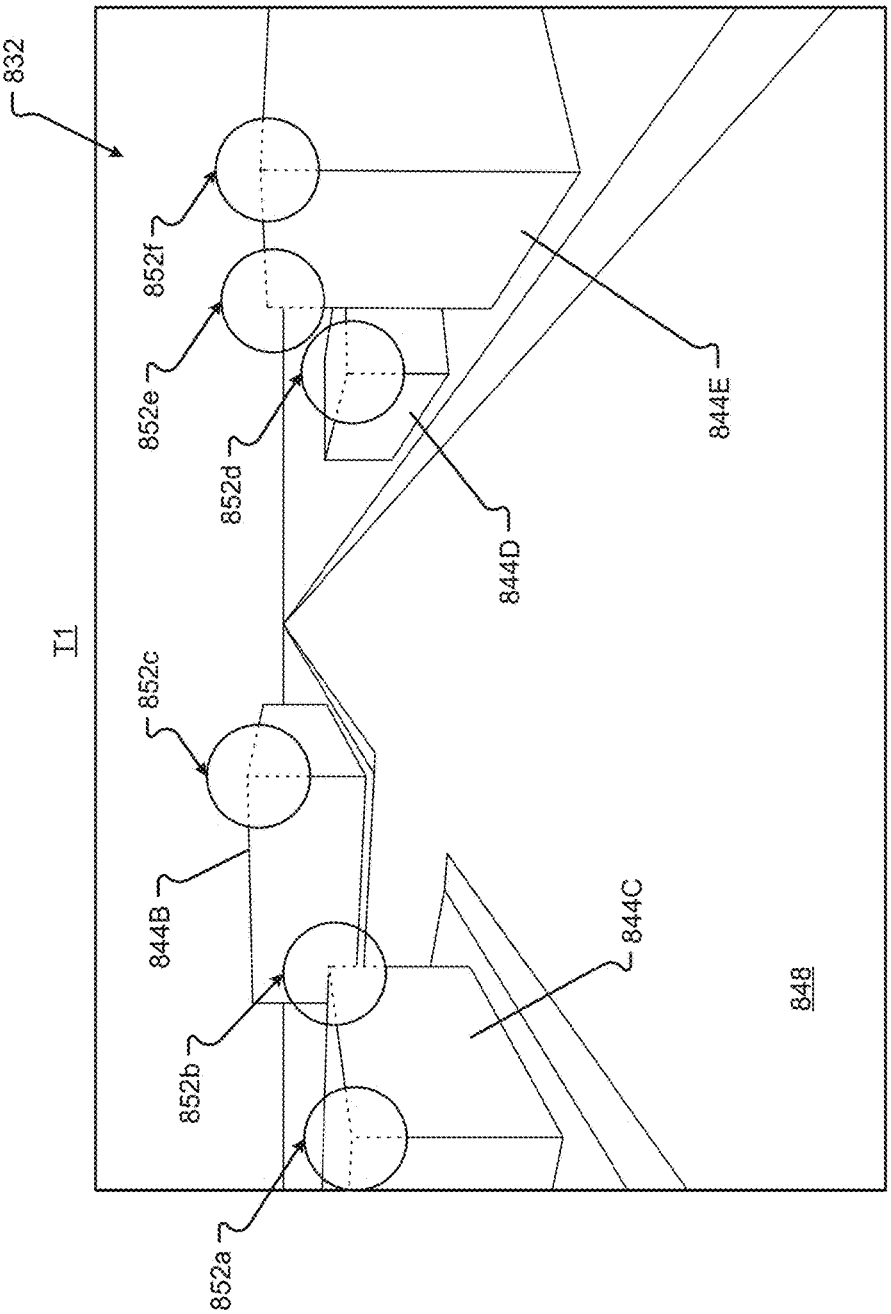

Fig. 8F

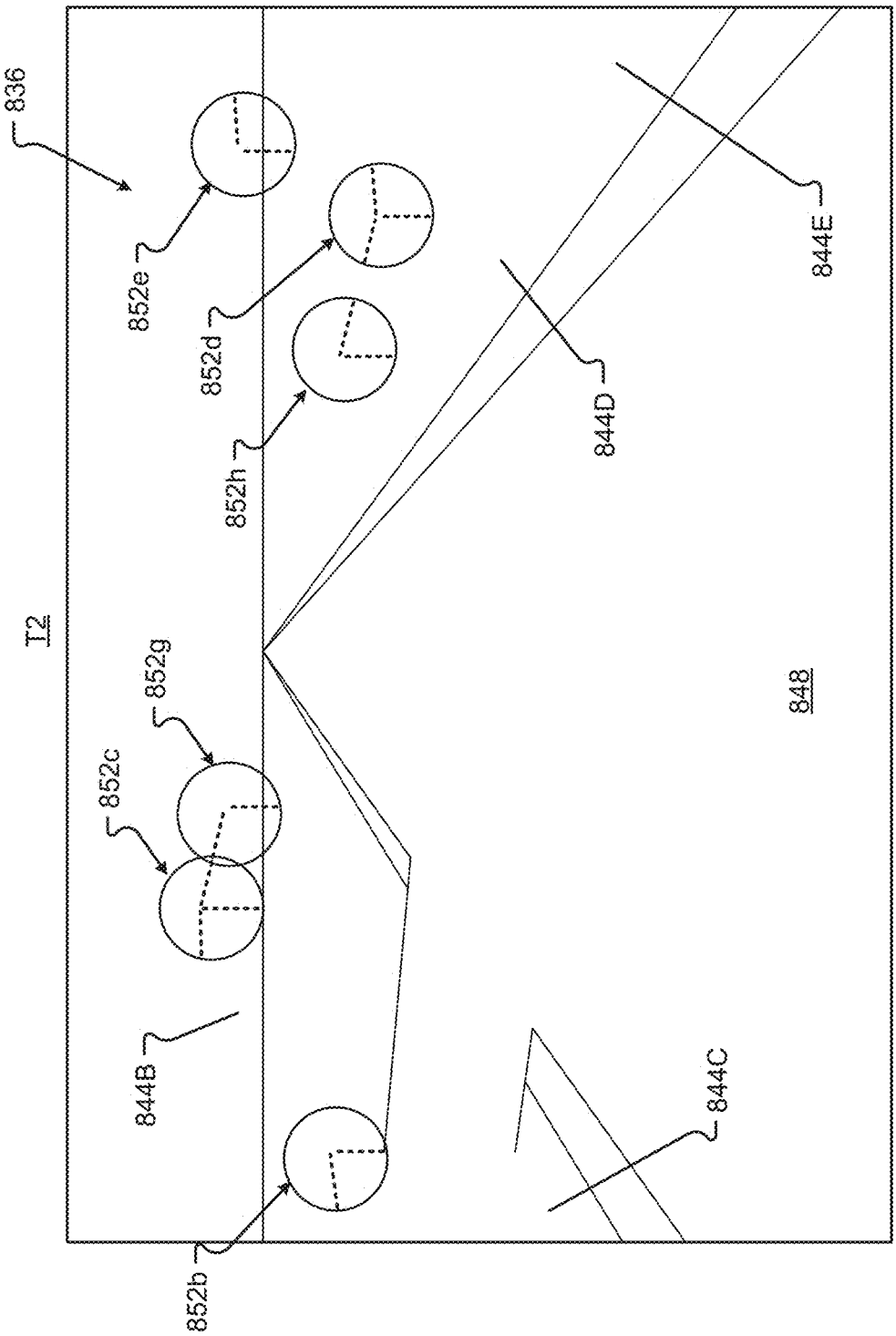

Fig. 8G

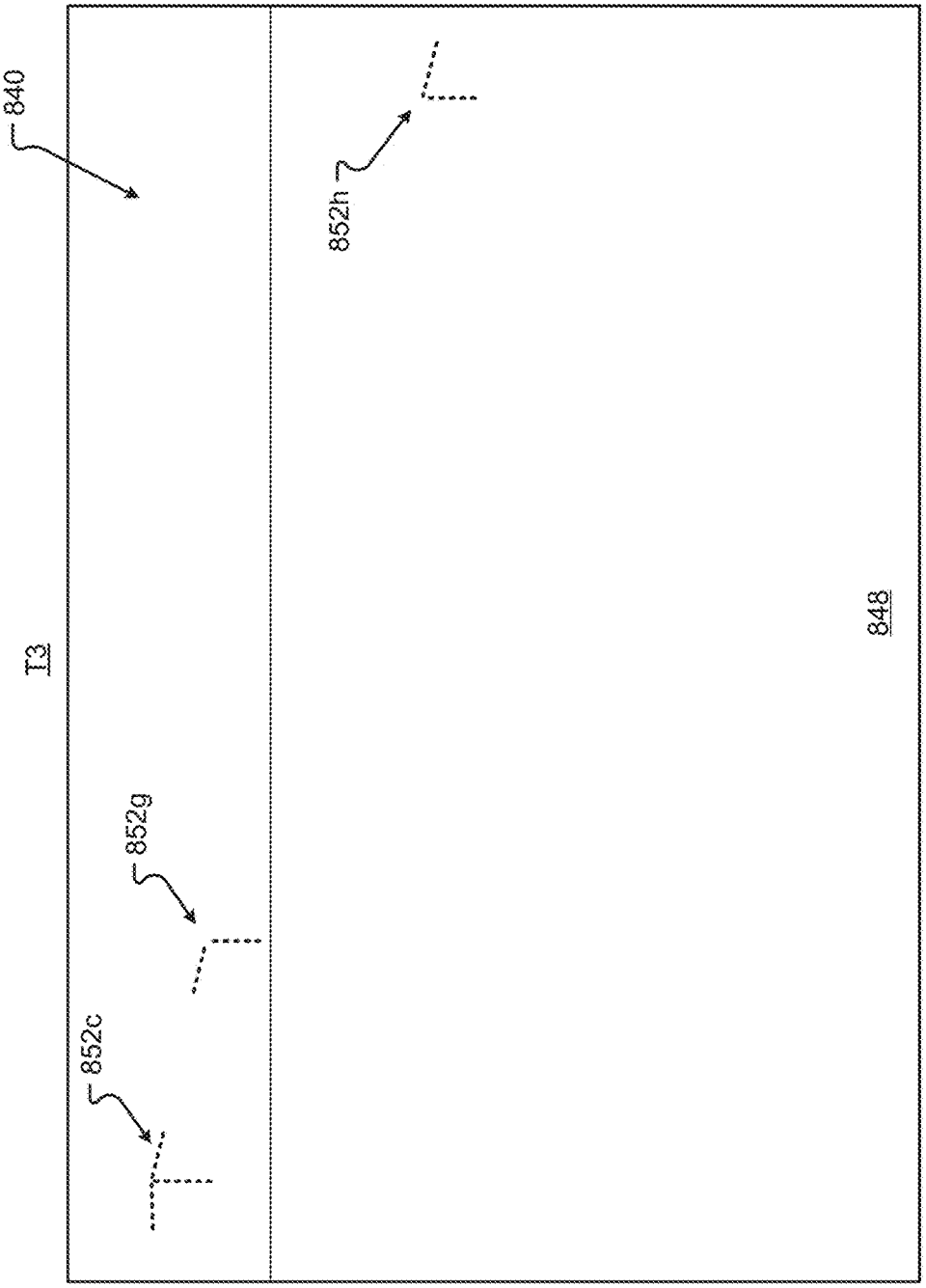

Fig. 8H

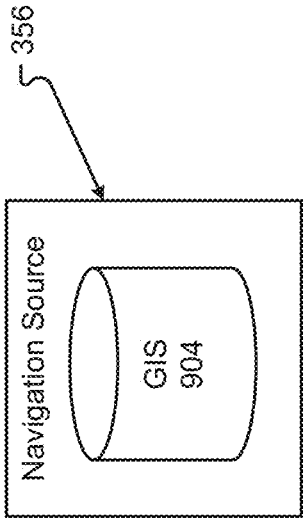
356
Navigation Source
GIS
904

Fig. 9A

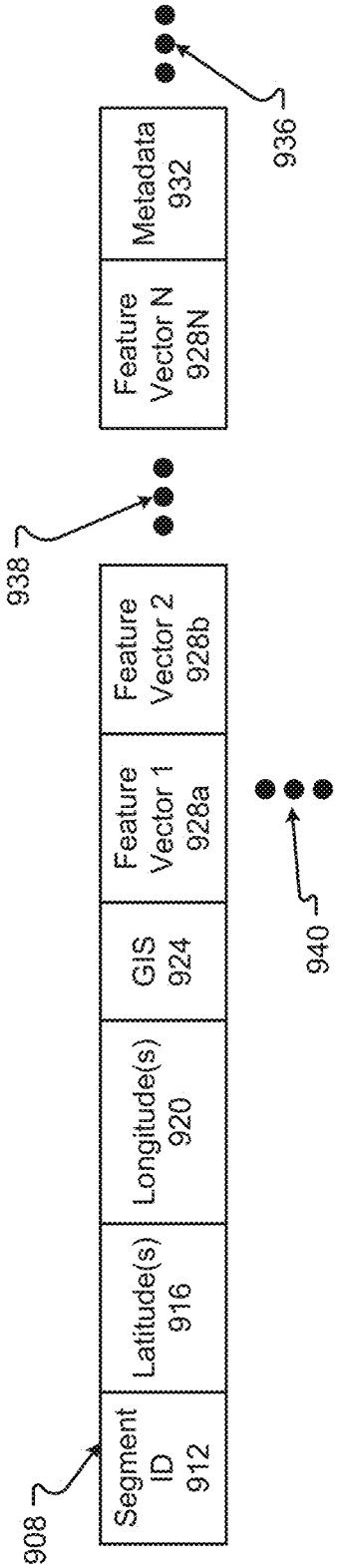
908
Segment ID 912
Latitude(s) 916
Longitude(s) 920
GIS 924
Feature Vector 1 928a
Feature Vector 2 928b
938
Feature Vector N 928N
Metadata 932
936
940

Fig. 9B

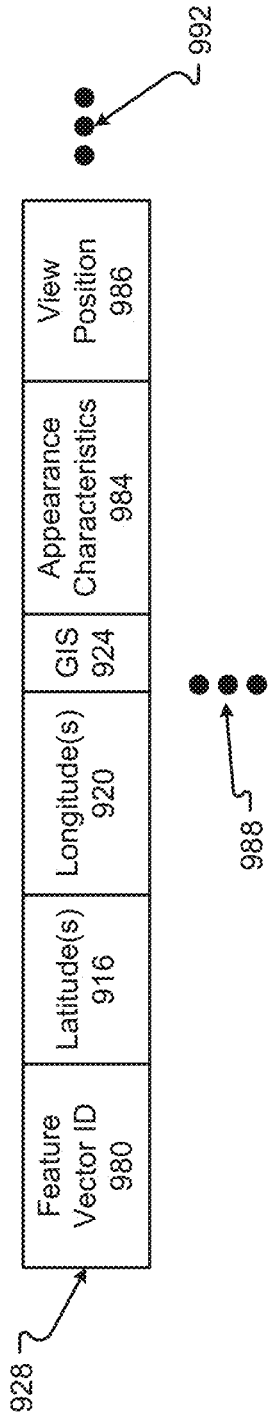
Feature Vector ID 980
Latitude(s) 916
Longitude(s) 920
GIS 924
Appearance Characteristics 984
View Position 986
928
988
992

Fig. 9C

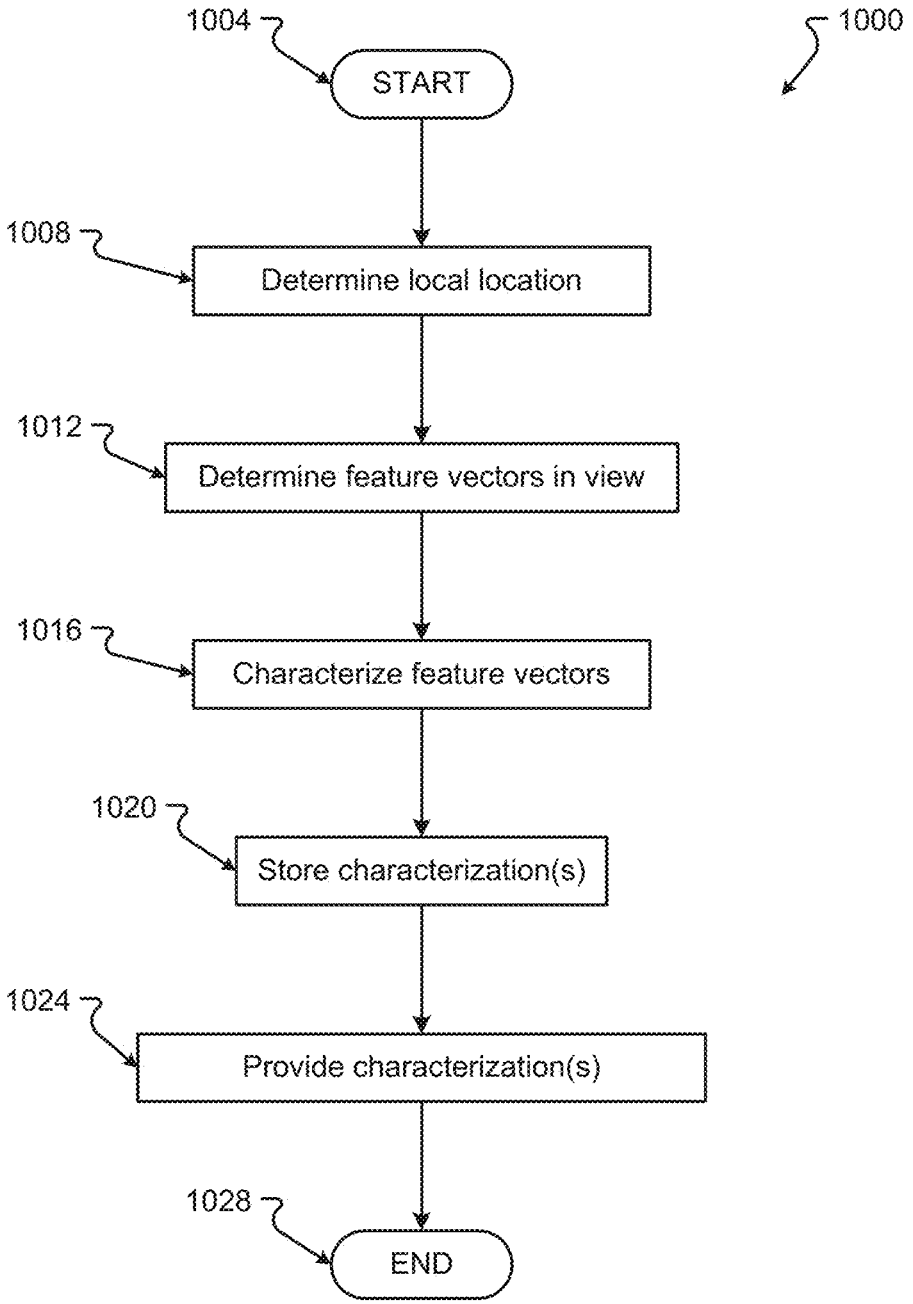
1000
1004
START
1008
Determine local location
1012
Determine feature vectors in view
1016
Characterize feature vectors
1020
Store characterization(s)
1024
Provide characterization(s)
1028
END

Fig. 10

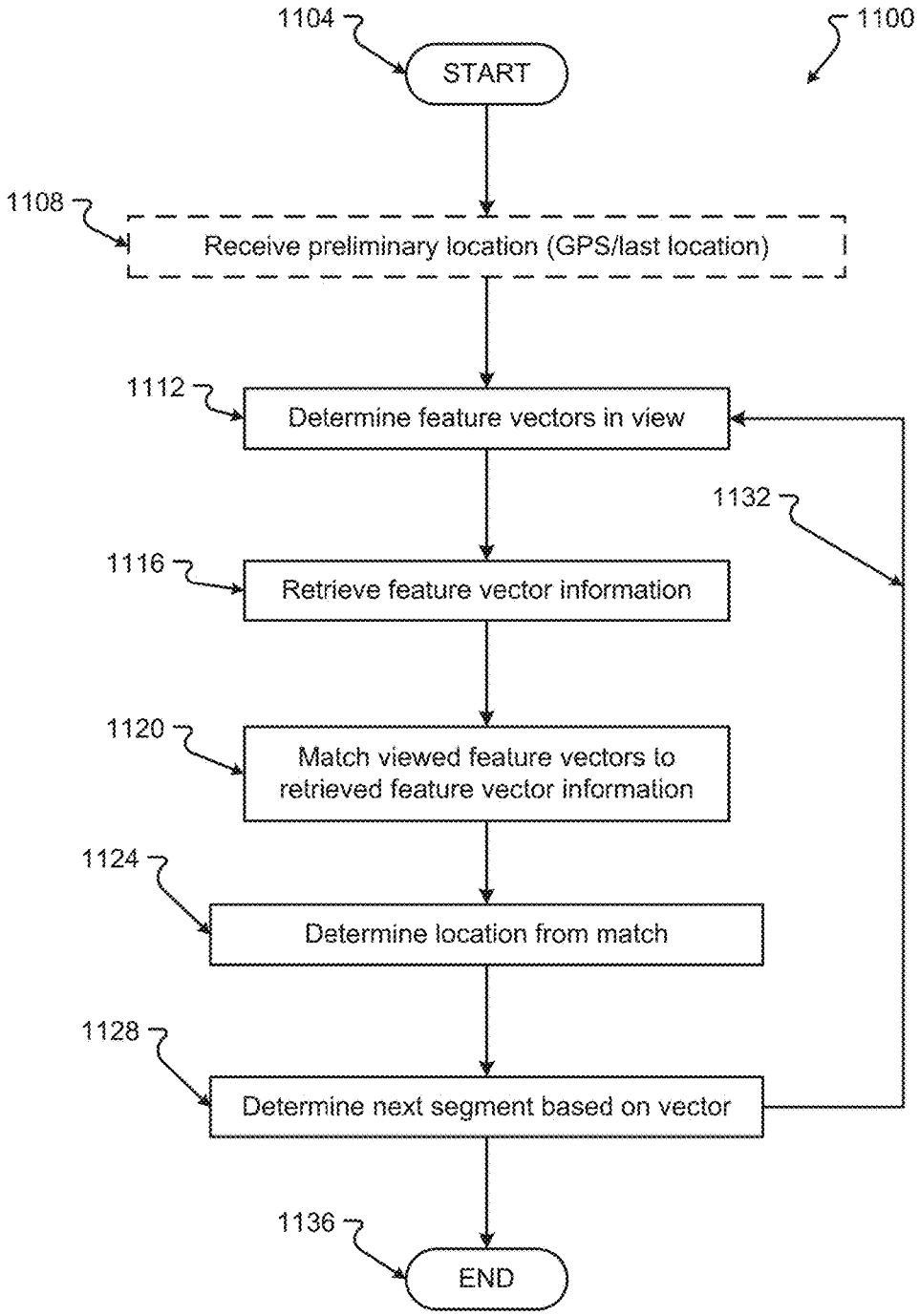
1104
START
1100
1108
Receive preliminary location (GPS/last location)
1112
Determine feature vectors in view
1132
1116
Retrieve feature vector information
1120
Match viewed feature vectors to retrieved feature vector information
1124
Determine location from match
1128
Determine next segment based on vector
1136
END

Fig. 11

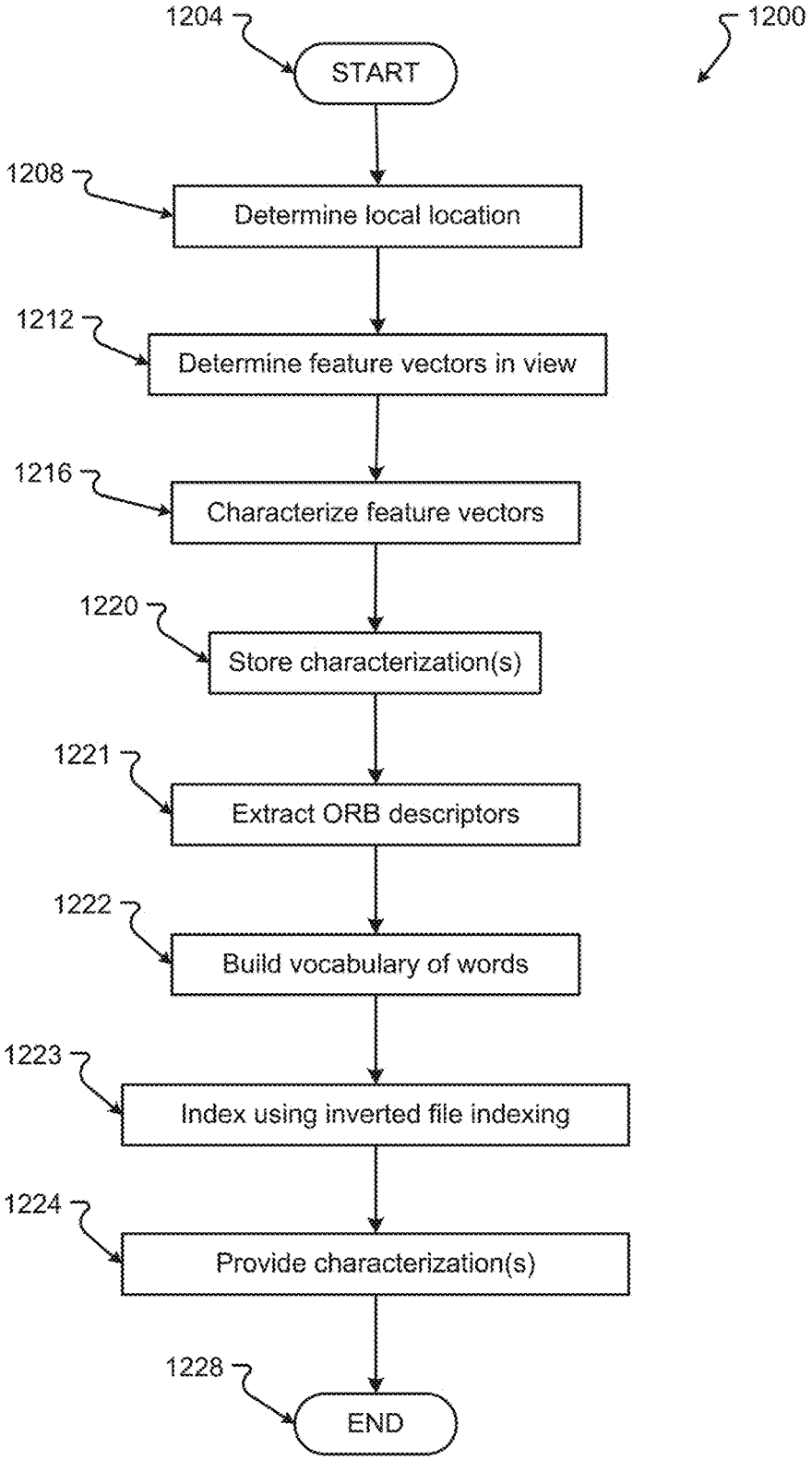
1200
1204
START
1208
Determine local location
1212
Determine feature vectors in view
1216
Characterize feature vectors
1220
Store characterization(s)
1221
Extract ORB descriptors
1222
Build vocabulary of words
1223
Index using inverted file indexing
1224
Provide characterization(s)
1228
END

Fig. 12

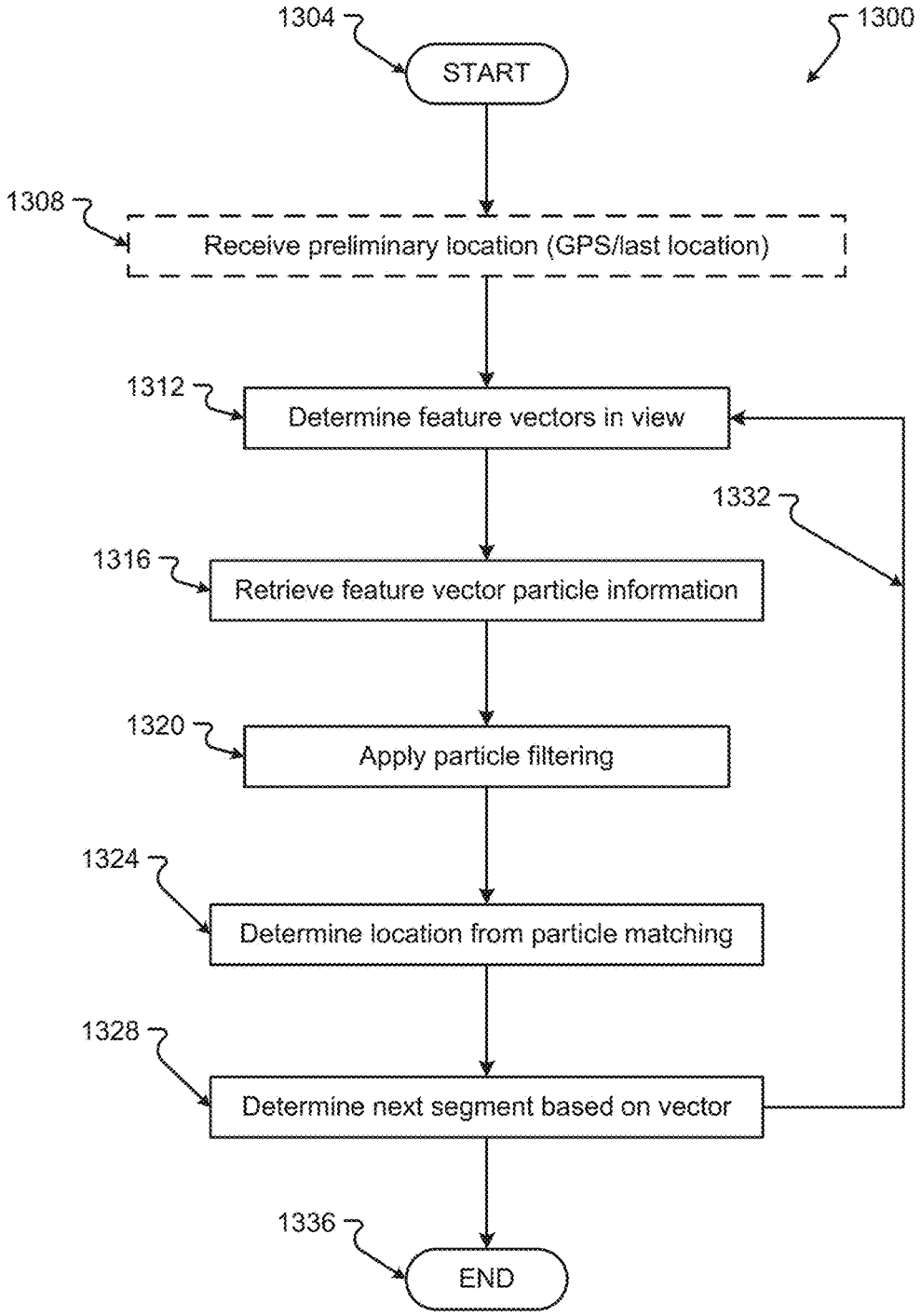
1304
START
1300
1308
Receive preliminary location (GPS/last location)
1312
Determine feature vectors in view
1332
1316
Retrieve feature vector particle information
1320
Apply particle filtering
1324
Determine location from particle matching
1328
Determine next segment based on vector
1336
END

Fig. 13

VEHICLE SELF-LOCALIZATION USING PARTICLE FILTERS AND VISUAL ODOMETRY

CROSS REFERENCE TO RELATED APPLICATIONS

[0001] The present application claims the benefits of and priority, under 35 U.S.C. § 119(e), to U.S. Provisional Patent Application Ser. No. 62/616,581 filed on Jan. 12, 2018, by Yalla et al., and entitled "Vehicle Self-Localization Using Particle Filters and Visual Odometry," the entire disclosure of which is incorporated herein by reference, in its entirety, for all that it teaches and for all purposes.

[0002] The present application is also a continuation-in-part of U.S. patent application Ser. No. 15/798,016 filed on Oct. 30, 2017, by Yalla et al., and entitled "Visual Place Recognition Based Self-Localization for Autonomous Vehicles," the entire disclosure of which is incorporated herein by reference, in its entirety, for all that it teaches and for all purposes.

FIELD

[0003] The present disclosure is generally directed to vehicle systems, in particular, toward autonomous vehicle systems.

BACKGROUND

[0004] In recent years, transportation methods have changed substantially. This change is due in part to a concern over the limited availability of natural resources, a proliferation in personal technology, and a societal shift to adopt more environmentally friendly transportation solutions. These considerations have encouraged the development of a number of new flexible-fuel vehicles, hybrid-electric vehicles, and electric vehicles.

[0005] Generally, vehicles rely on the Global Positioning System (GPS) to provide location data. Transmissions from the orbiting GPS satellites allow a vehicle to triangulate the vehicle's position and associate that position with a digital map or Geographic Information System (GIS) information to determine the location of the vehicle. Unfortunately, GPS signals can be interfered with by large buildings, canyons, trees, power lines, etc. Thus, it is not always possible to receive a GPS signal. Further, the GPS signal is only accurate to a few meters. A self-driving vehicle can therefore not rely on GPS to determine the exact position of the vehicle as a self-driving vehicle may need locate itself within a lane or roadway that is only a few meters wide and may travel through areas that do not receive a GPS signal.

BRIEF DESCRIPTION OF THE DRAWINGS

[0006] FIG. **1** shows a vehicle in accordance with embodiments of the present disclosure;

[0007] FIG. **2** shows a plan view of the vehicle in accordance with at least some embodiments of the present disclosure;

[0008] FIG. **3**A is a block diagram of an embodiment of a communication environment of the vehicle in accordance with embodiments of the present disclosure;

[0009] FIG. **3**B is a block diagram of an embodiment of interior sensors within the vehicle in accordance with embodiments of the present disclosure;

[0010] FIG. **3**C is a block diagram of an embodiment of a navigation system of the vehicle in accordance with embodiments of the present disclosure;

[0011] FIG. **4** shows an embodiment of the instrument panel of the vehicle according to one embodiment of the present disclosure;

[0012] FIG. **5** is a block diagram of an embodiment of a communications subsystem of the vehicle;

[0013] FIG. **6** is a block diagram of a computing environment associated with the embodiments presented herein;

[0014] FIG. **7** is a block diagram of a computing device associated with one or more components described herein;

[0015] FIG. **8**A shows a visual representation of an embodiment of a vehicle localization system in accordance with embodiments of the present disclosure;

[0016] FIG. **8**B shows another visual representation of an embodiment of a vehicle localization system in accordance with embodiments of the present disclosure;

[0017] FIG. **8**C shows another visual representation of an embodiment of a vehicle localization system in accordance with embodiments of the present disclosure;

[0018] FIG. **8**D shows another visual representation of an embodiment of a vehicle localization system in accordance with embodiments of the present disclosure;

[0019] FIG. **8**E shows another visual representation of an embodiment of a vehicle localization system in accordance with embodiments of the present disclosure;

[0020] FIG. **8**F shows another visual representation of an embodiment of a vehicle localization system in accordance with embodiments of the present disclosure;

[0021] FIG. **8**G shows another visual representation of an embodiment of a vehicle localization system in accordance with embodiments of the present disclosure;

[0022] FIG. **8**H shows another visual representation of an embodiment of a vehicle localization system in accordance with embodiments of the present disclosure;

[0023] FIG. **9**A is a diagram of an embodiment of a data store that stores localization data in accordance with embodiments of the present disclosure;

[0024] FIG. **9**B is a diagram of an embodiment of a data structure that stores localization data in accordance with embodiments of the present disclosure;

[0025] FIG. **9**C is another diagram of an embodiment of another data structure that stores localization data in accordance with embodiments of the present disclosure;

[0026] FIG. **10** is a process diagram of an embodiment of a method for creating segment information for determining the local position of a vehicle in accordance with embodiments of the present disclosure;

[0027] FIG. **11** is a process diagram of an embodiment of a method for determining the local position of a vehicle in accordance with embodiments of the present disclosure;

[0028] FIG. **12** is a process diagram of an embodiment of a method for creating segment information for determining the local position of a vehicle in accordance with alternative embodiments of the present disclosure; and

[0029] FIG. **13** is a process diagram of an embodiment of a method for determining the local position of a vehicle in accordance with alternative embodiments of the present disclosure.

DETAILED DESCRIPTION

[0030] Embodiments of the present disclosure will be described in connection with a vehicle, and in some embodi-

ments, a self-driving vehicle. Methods and systems herein can let an autonomous vehicle localize itself precisely and in near real-time in a digital map using visual place recognition. Commercial GPS solutions used in the production of autonomous vehicles generally have very low accuracy. For autonomous driving, the vehicle may need to be able to localize in the map very precisely, for example, within a few centimeters. Additionally, in urban areas with high-rise buildings, the vehicles will face problems with poor GPS Signal reception.

[0031] The embodiments described herein solve these and other problems by incorporating visual place recognition into the digital map and localization process. The roadways or routes within the map can be characterized as a set of nodes. The nodes in the map can be augmented with feature vectors that represent the visual scenes captured using camera sensors or other sensors. These feature vectors can be constantly updated on the map server, based on the real-time information that is being generated by the vehicles (both autonomous and non-autonomous) on the different road segments, and then provided to the vehicles driving the roadways. This process can help create and maintain a diverse set of features for visual place recognition to counter the situations where a scene environment can be changing due to weather, construction, or other phenomenon.

[0032] For the self-localization of the autonomous vehicle, a combination of approaches, for example, particle-filtering and/or visual odometry, may be used to identify potential current positions of the vehicle and use visual feature matching (visual place recognition) to aid with faster and more efficient solution. The localization of the vehicle may be an iterative process and may take a short amount of time (e.g., a few seconds) to converge to a location on the map. The use of visual place recognition, by embedding the feature vectors into the map and doing real-time feature comparison, expedites this iterative localization process by huge margin, for example, to milliseconds.

[0033] The above methods are an improvement over other existing localization methods. For example, some other systems use a Mixture of Gaussians-based approach to localize based purely on visual odometry information. This Mixture of Gaussians approach has issues converging faster to a precise location on the map as there are number of potential road segments that could have similar road topology giving ambiguous visual odometry segments for matching with the map information. In the embodiments herein, visual place recognition can augment the segment nodes in the High Definition (HD) maps. At each map node, the navigation system or map system can store a feature vector captured using the camera sensors. As the localization algorithm tries to localize the current position, the navigation system can continuously capture images using the camera or other sensors, may then extract the image feature vectors, and may then match the feature vectors that are captured by the sensors with the feature vectors that are currently stored at each node in the map. Thereby, the likely number of possible locations where the vehicle may be located is reduced.

[0034] Other existing system may use a three-dimensional (3D) Light Detection and Ranging (LiDAR) point cloud-based matching for localization. The digital map itself, in these 3D LiDAR systems, is created using dense 3D point clouds. The dense 3D point cloud-based maps are created by capturing 3D points using LiDARs and mapping the same road segment multiple times. The embodiments herein do depend on these dense 3D point clouds but can employ a HD map that can be generated from these dense 3D point clouds. Dense 3D point cloud-based maps are not practical to deploy in a production environment due to the huge computational and memory footprint requirements, which are impractical to place in a vehicle.

[0035] FIG. **1** shows a perspective view of a vehicle **100** in accordance with embodiments of the present disclosure. The electric vehicle **100** comprises a vehicle front **110**, vehicle aft or rear **120**, vehicle roof **130**, at least one vehicle side **160**, a vehicle undercarriage **140**, and a vehicle interior **150**. In any event, the vehicle **100** may include a frame **104** and one or more body panels **108** mounted or affixed thereto. The vehicle **100** may include one or more interior components (e.g., components inside an interior space **150**, or user space, of a vehicle **100**, etc.), exterior components (e.g., components outside of the interior space **150**, or user space, of a vehicle **100**, etc.), drive systems, controls systems, structural components, etc.

[0036] Although shown in the form of a car, it should be appreciated that the vehicle **100** described herein may include any conveyance or model of a conveyance, where the conveyance was designed for the purpose of moving one or more tangible objects, such as people, animals, cargo, and the like. The term "vehicle" does not require that a conveyance moves or is capable of movement. Typical vehicles may include but are in no way limited to cars, trucks, motorcycles, busses, automobiles, trains, railed conveyances, boats, ships, marine conveyances, submarine conveyances, airplanes, space craft, flying machines, human-powered conveyances, and the like.

[0037] In some embodiments, the vehicle **100** may include a number of sensors, devices, and/or systems that are capable of assisting in driving operations, e.g., autonomous or semi-autonomous control. Examples of the various sensors and systems may include, but are in no way limited to, one or more of cameras (e.g., independent, stereo, combined image, etc.), InfraRed (IR) sensors, Radio Frequency (RF) sensors, ultrasonic sensors (e.g., transducers, transceivers, etc.), RADAR sensors (e.g., object-detection sensors and/or systems), Light Imaging, Detection, And Ranging (LIDAR) systems, odometry sensors and/or devices (e.g., encoders, etc.), orientation sensors (e.g., accelerometers, gyroscopes, magnetometer, etc.), navigation sensors and systems (e.g., GPS, etc.), and other ranging, imaging, and/or object-detecting sensors. The sensors may be disposed in an interior space **150** of the vehicle **100** and/or on an outside of the vehicle **100**. In some embodiments, the sensors and systems may be disposed in one or more portions of a vehicle **100** (e.g., the frame **104**, a body panel, a compartment, etc.).

[0038] The vehicle sensors and systems may be selected and/or configured to suit a level of operation associated with the vehicle **100**. Among other things, the number of sensors used in a system may be altered to increase or decrease information available to a vehicle control system (e.g., affecting control capabilities of the vehicle **100**). Additionally, or alternatively, the sensors and systems may be part of one or more Advanced Driver Assistance Systems (ADAS) associated with a vehicle **100**. In any event, the sensors and systems may be used to provide driving assistance at any level of operation (e.g., from fully-manual to fully-autonomous operations, etc.) as described herein.

[0039] The various levels of vehicle control and/or operation can be described as corresponding to a level of autonomy associated with a vehicle **100** for vehicle driving operations. For instance, at Level 0, or fully-manual driving operations, a driver (e.g., a human driver) may be responsible for all the driving control operations (e.g., steering, accelerating, braking, etc.) associated with the vehicle. Level 0 may be referred to as a "No Automation" level. At Level 1, the vehicle may be responsible for a limited number of the driving operations associated with the vehicle, while the driver is still responsible for most driving control operations. An example of a Level 1 vehicle may include a vehicle in which the throttle control and/or braking operations may be controlled by the vehicle (e.g., cruise control operations, etc.). Level 1 may be referred to as a "Driver Assistance" level. At Level 2, the vehicle may collect information (e.g., via one or more driving assistance systems, sensors, etc.) about an environment of the vehicle (e.g., surrounding area, roadway, traffic, ambient conditions, etc.) and use the collected information to control driving operations (e.g., steering, accelerating, braking, etc.) associated with the vehicle. In a Level 2 autonomous vehicle, the driver may be required to perform other aspects of driving operations not controlled by the vehicle. Level 2 may be referred to as a "Partial Automation" level. It should be appreciated that Levels 0-2 all involve the driver monitoring the driving operations of the vehicle.

[0040] At Level 3, the driver may be separated from controlling all the driving operations of the vehicle except when the vehicle makes a request for the operator to act or intervene in controlling one or more driving operations. In other words, the driver may be separated from controlling the vehicle unless the driver is required to take over for the vehicle. Level 3 may be referred to as a "Conditional Automation" level. At Level 4, the driver may be separated from controlling all the driving operations of the vehicle and the vehicle may control driving operations even when a user fails to respond to a request to intervene. Level 4 may be referred to as a "High Automation" level. At Level 5, the vehicle can control all the driving operations associated with the vehicle in all driving modes. The vehicle in Level 5 may continually monitor traffic, vehicular, roadway, and/or environmental conditions while driving the vehicle. In Level 5, there is no human driver interaction required in any driving mode. Accordingly, Level 5 may be referred to as a "Full Automation" level. It should be appreciated that in Levels 3-5 the vehicle, and/or one or more automated driving systems associated with the vehicle, monitors the driving operations of the vehicle and the driving environment.

[0041] As shown in FIG. **1**, the vehicle **100** may, for example, include at least one of a ranging and imaging system **112** (e.g., LIDAR, etc.), an imaging sensor **116**A, **116**F (e.g., camera, IR, etc.), a radio object-detection and ranging system sensors **116**B (e.g., RADAR, RF, etc.), ultrasonic sensors **116**C, and/or other object-detection sensors **116**D, **116**E. In some embodiments, the LIDAR system **112** and/or sensors may be mounted on a roof **130** of the vehicle **100**. In one embodiment, the RADAR sensors **116**B may be disposed at least at a front **110**, aft **120**, or side **160** of the vehicle **100**. Among other things, the RADAR sensors may be used to monitor and/or detect a position of other vehicles, pedestrians, and/or other objects near, or proximal to, the vehicle **100**. While shown associated with one or more areas of a vehicle **100**, it should be appreciated that any of the sensors and systems **116**A-K, **112** illustrated in FIGS. **1** and **2** may be disposed in, on, and/or about the vehicle **100** in any position, area, and/or zone of the vehicle **100**.

[0042] Referring now to FIG. **2**, a plan view of a vehicle **100** will be described in accordance with embodiments of the present disclosure. In particular, FIG. **2** shows a vehicle sensing environment **200** at least partially defined by the sensors and systems **116**A-K, **112** disposed in, on, and/or about the vehicle **100**. Each sensor **116**A-K may include an operational detection range R and operational detection angle. The operational detection range R may define the effective detection limit, or distance, of the sensor **116**A-K. In some cases, this effective detection limit may be defined as a distance from a portion of the sensor **116**A-K (e.g., a lens, sensing surface, etc.) to a point in space offset from the sensor **116**A-K. The effective detection limit may define a distance, beyond which, the sensing capabilities of the sensor **116**A-K deteriorate, fail to work, or are unreliable. In some embodiments, the effective detection limit may define a distance, within which, the sensing capabilities of the sensor **116**A-K are able to provide accurate and/or reliable detection information. The operational detection angle may define at least one angle of a span, or between horizontal and/or vertical limits, of a sensor **116**A-K. As can be appreciated, the operational detection limit and the operational detection angle of a sensor **116**A-K together may define the effective detection zone **216**A-D (e.g., the effective detection area, and/or volume, etc.) of a sensor **116**A-K.

[0043] In some embodiments, the vehicle **100** may include a ranging and imaging system **112** such as LIDAR, or the like. The ranging and imaging system **112** may be configured to detect visual information in an environment surrounding the vehicle **100**. The visual information detected in the environment surrounding the ranging and imaging system **112** may be processed (e.g., via one or more sensor and/or system processors, etc.) to generate a complete 360-degree view of an environment **200** around the vehicle. The ranging and imaging system **112** may be configured to generate changing 360-degree views of the environment **200** in real-time, for instance, as the vehicle **100** drives. In some cases, the ranging and imaging system **112** may have an effective detection limit **204** that is some distance from the center of the vehicle **100** outward over 360 degrees. The effective detection limit **204** of the ranging and imaging system **112** defines a view zone **208** (e.g., an area and/or volume, etc.) surrounding the vehicle **100**. Any object falling outside of the view zone **208** is in the undetected zone **212** and would not be detected by the ranging and imaging system **112** of the vehicle **100**.

[0044] Sensor data and information may be collected by one or more sensors or systems **116**A-K, **112** of the vehicle **100** monitoring the vehicle sensing environment **200**. This information may be processed (e.g., via a processor, computer-vision system, etc.) to determine targets (e.g., objects, signs, people, markings, roadways, conditions, etc.) inside one or more detection zones **208**, **216**A-D associated with the vehicle sensing environment **200**. In some cases, information from multiple sensors **116**A-K may be processed to form composite sensor detection information. For example, a first sensor **116**A and a second sensor **116**F may correspond to a first camera **116**A and a second camera **116**F aimed in a forward traveling direction of the vehicle **100**. In this example, images collected by the cameras **116**A, **116**F may be combined to form stereo image information. This

composite information may increase the capabilities of a single sensor in the one or more sensors **116**A-K by, for example, adding the ability to determine depth associated with targets in the one or more detection zones **208**, **216**A-D. Similar image data may be collected by rear view cameras (e.g., sensors **116**G, **116**H) aimed in a rearward traveling direction vehicle **100**.

[0045] In some embodiments, multiple sensors **116**A-K may be effectively joined to increase a sensing zone and provide increased sensing coverage. For instance, multiple RADAR sensors **116**B disposed on the front **110** of the vehicle may be joined to provide a zone **216**B of coverage that spans across an entirety of the front **110** of the vehicle. In some cases, the multiple RADAR sensors **116**B may cover a detection zone **216**B that includes one or more other sensor detection zones **216**A. These overlapping detection zones may provide redundant sensing, enhanced sensing, and/or provide greater detail in sensing within a particular portion (e.g., zone **216**A) of a larger zone (e.g., zone **216**B). Additionally, or alternatively, the sensors **116**A-K of the vehicle **100** may be arranged to create a complete coverage, via one or more sensing zones **208**, **216**A-D around the vehicle **100**. In some areas, the sensing zones **216**C of two or more sensors **116**D, **116**E may intersect at an overlap zone **220**. In some areas, the angle and/or detection limit of two or more sensing zones **216**C, **216**D (e.g., of two or more sensors **116**E, **116**J, **116**K) may meet at a virtual intersection point **224**.

[0046] The vehicle **100** may include a number of sensors **116**E, **116**G, **116**H, **116**J, **116**K disposed proximal to the rear **120** of the vehicle **100**. These sensors can include, but are in no way limited to, an imaging sensor, camera, IR, a radio object-detection and ranging sensors, RADAR, RF, ultrasonic sensors, and/or other object-detection sensors. Among other things, these sensors **116**E, **116**G, **116**H, **116**J, **116**K may detect targets near or approaching the rear of the vehicle **100**. For example, another vehicle approaching the rear **120** of the vehicle **100** may be detected by one or more of the ranging and imaging system (e.g., LIDAR) **112**, rear-view cameras **116**G, **116**H, and/or rear facing RADAR sensors **116**J, **116**K. As described above, the images from the rear-view cameras **116**G, **116**H may be processed to generate a stereo view (e.g., providing depth associated with an object or environment, etc.) for targets visible to both cameras **116**G, **116**H. As another example, the vehicle **100** may be driving and one or more of the ranging and imaging system **112**, front-facing cameras **116**A, **116**F, front-facing RADAR sensors **116**B, and/or ultrasonic sensors **116**C may detect targets in front of the vehicle **100**. This approach may provide critical sensor information to a vehicle control system in at least one of the autonomous driving levels described above. For instance, when the vehicle **100** is driving autonomously (e.g., Level 3, Level 4, or Level 5) and detects other vehicles stopped in a travel path, the sensor detection information may be sent to the vehicle control system of the vehicle **100** to control a driving operation (e.g., braking, decelerating, etc.) associated with the vehicle **100** (in this example, slowing the vehicle **100** as to avoid colliding with the stopped other vehicles). As yet another example, the vehicle **100** may be operating and one or more of the ranging and imaging system **112**, and/or the side-facing sensors **116**D, **116**E (e.g., RADAR, ultrasonic, camera, combinations thereof, and/or other type of sensor), may detect targets at a side of the vehicle **100**. It should be appreciated that the sensors **116**A-K may detect a target that is both at a side **160** and a front **110** of the vehicle **100** (e.g., disposed at a diagonal angle to a centerline of the vehicle **100** running from the front **110** of the vehicle **100** to the rear **120** of the vehicle). Additionally, or alternatively, the sensors **116**A-K may detect a target that is both, or simultaneously, at a side **160** and a rear **120** of the vehicle **100** (e.g., disposed at a diagonal angle to the centerline of the vehicle **100**).

[0047] FIGS. **3**A-**3**C are block diagrams of an embodiment of a communication environment **300** of the vehicle **100** in accordance with embodiments of the present disclosure. The communication system **300** may include one or more vehicle driving vehicle sensors and systems **304**, sensor processors **340**, sensor data memory **344**, vehicle control system **348**, communications subsystem **350**, control data **364**, computing devices **368**, display devices **372**, and other components **374** that may be associated with a vehicle **100**. These associated components may be electrically and/or communicatively coupled to one another via at least one bus **360**. In some embodiments, the one or more associated components may send and/or receive signals across a communication network **352** to at least one of a navigation source **356**A, a control source **356**B, or some other entity **356**N.

[0048] In accordance with at least some embodiments of the present disclosure, the communication network **352** may comprise any type of known communication medium or collection of communication media and may use any type of protocols, such as SIP, TCP/IP, SNA, IPX, AppleTalk, and the like, to transport messages between endpoints. The communication network **352** may include wired and/or wireless communication technologies. The Internet is an example of the communication network **352** that constitutes an Internet Protocol (IP) network consisting of many computers, computing networks, and other communication devices located all over the world, which are connected through many telephone systems and other means. Other examples of the communication network **352** include, without limitation, a standard Plain Old Telephone System (POTS), an Integrated Services Digital Network (ISDN), the Public Switched Telephone Network (PSTN), a Local Area Network (LAN), such as an Ethernet network, a Token-Ring network and/or the like, a Wide Area Network (WAN), a virtual network, including without limitation a Virtual Private Network (VPN); the Internet, an intranet, an extranet, a cellular network, an infra-red network; a wireless network (e.g., a network operating under any of the IEEE 802.9 suite of protocols, the Bluetooth® protocol known in the art, and/or any other wireless protocol), and any other type of packet-switched or circuit-switched network known in the art and/or any combination of these and/or other networks. In addition, it can be appreciated that the communication network **352** need not be limited to any one network type, and instead may be comprised of a number of different networks and/or network types. The communication network **352** may comprise a number of different communication media such as coaxial cable, copper cable/wire, fiber-optic cable, antennas for transmitting/receiving wireless messages, and combinations thereof.

[0049] The driving vehicle sensors and systems **304** may include at least one navigation **308** (e.g., Global Positioning System (GPS), etc.), orientation **312**, odometry **316**, LIDAR **320**, RADAR **324**, ultrasonic **328**, camera **332**, InfraRed (IR) **336**, and/or other sensor or system **338**. These driving

vehicle sensors and systems **304** may be similar, if not identical, to the sensors and systems **116**A-K, **112** described in conjunction with FIGS. **1** and **2**.

[0050] The navigation sensor **308** may include one or more sensors having receivers and antennas that are configured to utilize a satellite-based navigation system including a network of navigation satellites capable of providing geolocation and time information to at least one component of the vehicle **100**. Examples of the navigation sensor **308** as described herein may include, but are not limited to, at least one of Garmin® GLO™ family of GPS and GLONASS combination sensors, Garmin® GPS 15x™ family of sensors, Garmin® GPS 16x™ family of sensors with high-sensitivity receiver and antenna, Garmin® GPS 18x OEM family of high-sensitivity GPS sensors, Dewetron DEWE-VGPS series of GPS sensors, GlobalSat 1-Hz series of GPS sensors, other industry-equivalent navigation sensors and/or systems, and may perform navigational and/or geolocation functions using any known or future-developed standard and/or architecture.

[0051] The orientation sensor **312** may include one or more sensors configured to determine an orientation of the vehicle **100** relative to at least one reference point. In some embodiments, the orientation sensor **312** may include at least one pressure transducer, stress/strain gauge, accelerometer, gyroscope, and/or geomagnetic sensor. Examples of the navigation sensor **308** as described herein may include, but are not limited to, at least one of Bosch Sensortec BMX 160 series low-power absolute orientation sensors, Bosch Sensortec BMX055 9-axis sensors, Bosch Sensortec BMI055 6-axis inertial sensors, Bosch Sensortec BMI160 6-axis inertial sensors, Bosch Sensortec BMF055 9-axis inertial sensors (accelerometer, gyroscope, and magnetometer) with integrated Cortex M0+ microcontroller, Bosch Sensortec BMP280 absolute barometric pressure sensors, Infineon TLV493D-A1B6 3D magnetic sensors, Infineon TLI493D-W1B6 3D magnetic sensors, Infineon TL family of 3D magnetic sensors, Murata Electronics SCC2000 series combined gyro sensor and accelerometer, Murata Electronics SCC1300 series combined gyro sensor and accelerometer, other industry-equivalent orientation sensors and/or systems, which may perform orientation detection and/or determination functions using any known or future-developed standard and/or architecture.

[0052] The odometry sensor and/or system **316** may include one or more components that is configured to determine a change in position of the vehicle **100** over time. In some embodiments, the odometry system **316** may utilize data from one or more other sensors and/or systems **304** in determining a position (e.g., distance, location, etc.) of the vehicle **100** relative to a previously measured position for the vehicle **100**. Additionally, or alternatively, the odometry sensors **316** may include one or more encoders, Hall speed sensors, and/or other measurement sensors/devices configured to measure a wheel speed, rotation, and/or number of revolutions made over time. Examples of the odometry sensor/system **316** as described herein may include, but are not limited to, at least one of Infineon TLE4924/26/27/28C high-performance speed sensors, Infineon TL4941plusC(B) single chip differential Hall wheel-speed sensors, Infineon TL5041plusC Giant Magnetoresistance (GMR) effect sensors, Infineon TL family of magnetic sensors, EPC Model 25SP Accu-CoderPro™ incremental shaft encoders, EPC Model 30M compact incremental encoders with advanced magnetic sensing and signal processing technology, EPC Model 925 absolute shaft encoders, EPC Model 958 absolute shaft encoders, EPC Model MA36S/MA63S/SA36S absolute shaft encoders, Dynapar™ F18 commutating optical encoder, Dynapar™ HS35R family of phased array encoder sensors, other industry-equivalent odometry sensors and/or systems, and may perform change in position detection and/or determination functions using any known or future-developed standard and/or architecture.

[0053] The LIDAR sensor/system **320** may include one or more components configured to measure distances to targets using laser illumination. In some embodiments, the LIDAR sensor/system **320** may provide 3D imaging data of an environment around the vehicle **100**. The imaging data may be processed to generate a full 360-degree view of the environment around the vehicle **100**. The LIDAR sensor/system **320** may include a laser light generator configured to generate a plurality of target illumination laser beams (e.g., laser light channels). In some embodiments, this plurality of laser beams may be aimed at, or directed to, a rotating reflective surface (e.g., a mirror) and guided outwardly from the LIDAR sensor/system **320** into a measurement environment. The rotating reflective surface may be configured to continually rotate 360 degrees about an axis, such that the plurality of laser beams is directed in a full 360-degree range around the vehicle **100**. A photodiode receiver of the LIDAR sensor/system **320** may detect when light from the plurality of laser beams emitted into the measurement environment returns (e.g., reflected echo) to the LIDAR sensor/system **320**. The LIDAR sensor/system **320** may calculate, based on a time associated with the emission of light to the detected return of light, a distance from the vehicle **100** to the illuminated target. In some embodiments, the LIDAR sensor/system **320** may generate over 2.0 million points per second and have an effective operational range of at least 100 meters. Examples of the LIDAR sensor/system **320** as described herein may include, but are not limited to, at least one of Velodyne® LiDAR™ HDL-64E 64-channel LIDAR sensors, Velodyne® LiDAR™ HDL-32E 32-channel LIDAR sensors, Velodyne® LiDAR™ PUCK™ VLP-16 16-channel LIDAR sensors, Leica Geosystems Pegasus: Two mobile sensor platform, Garmin® LIDAR-Lite v3 measurement sensor, Quanergy M8 LiDAR sensors, Quanergy S3 solid state LiDAR sensor, LeddarTech® LeddarVU compact solid state fixed-beam LIDAR sensors, other industry-equivalent LIDAR sensors and/or systems, and may perform illuminated target and/or obstacle detection in an environment around the vehicle **100** using any known or future-developed standard and/or architecture.

[0054] The RADAR sensors **324** may include one or more radio components that are configured to detect objects/targets in an environment of the vehicle **100**. In some embodiments, the RADAR sensors **324** may determine a distance, position, and/or movement vector (e.g., angle, speed, etc.) associated with a target over time. The RADAR sensors **324** may include a transmitter configured to generate and emit electromagnetic waves (e.g., radio, microwaves, etc.) and a receiver configured to detect returned electromagnetic waves. In some embodiments, the RADAR sensors **324** may include at least one processor configured to interpret the returned electromagnetic waves and determine locational properties of targets. Examples of the RADAR sensors **324** as described herein may include, but are not limited to, at least one of Infineon RASIC™ RTN7735PL

transmitter and RRN7745PL/46PL receiver sensors, Autoliv ASP Vehicle RADAR sensors, Delphi L2C0051TR 77 GHz ESR Electronically Scanning Radar sensors, Fujitsu Ten Ltd. Automotive Compact 77 GHz 3D Electronic Scan Millimeter Wave Radar sensors, other industry-equivalent RADAR sensors and/or systems, and may perform radio target and/or obstacle detection in an environment around the vehicle **100** using any known or future-developed standard and/or architecture.

[0055] The ultrasonic sensors **328** may include one or more components that are configured to detect objects/targets in an environment of the vehicle **100**. In some embodiments, the ultrasonic sensors **328** may determine a distance, position, and/or movement vector (e.g., angle, speed, etc.) associated with a target over time. The ultrasonic sensors **328** may include an ultrasonic transmitter and receiver, or transceiver, configured to generate and emit ultrasound waves and interpret returned echoes of those waves. In some embodiments, the ultrasonic sensors **328** may include at least one processor configured to interpret the returned ultrasonic waves and determine locational properties of targets. Examples of the ultrasonic sensors **328** as described herein may include, but are not limited to, at least one of Texas Instruments TIDA-00151 automotive ultrasonic sensor interface IC sensors, MaxBotix® MB8450 ultrasonic proximity sensor, MaxBotix® ParkSonar™-EZ ultrasonic proximity sensors, Murata Electronics MA40H1S-R open-structure ultrasonic sensors, Murata Electronics MA40S4R/S open-structure ultrasonic sensors, Murata Electronics MA58MF14-7N waterproof ultrasonic sensors, other industry-equivalent ultrasonic sensors and/or systems, and may perform ultrasonic target and/or obstacle detection in an environment around the vehicle **100** using any known or future-developed standard and/or architecture.

[0056] The camera sensors **332** may include one or more components configured to detect image information associated with an environment of the vehicle **100**. In some embodiments, the camera sensors **332** may include a lens, filter, image sensor, and/or a digital image processor. It is an aspect of the present disclosure that multiple camera sensors **332** may be used together to generate stereo images providing depth measurements. Examples of the camera sensors **332** as described herein may include, but are not limited to, at least one of ON Semiconductor® MT9V024 Global Shutter VGA GS CMOS image sensors, Teledyne DALSA Falcon2 camera sensors, CMOSIS CMV50000 high-speed CMOS image sensors, other industry-equivalent camera sensors and/or systems, and may perform visual target and/or obstacle detection in an environment around the vehicle **100** using any known or future-developed standard and/or architecture.

[0057] The InfraRed (IR) sensors **336** may include one or more components configured to detect image information associated with an environment of the vehicle **100**. The IR sensors **336** may be configured to detect targets in low-light, dark, or poorly-lit environments. The IR sensors **336** may include an IR light emitting element (e.g., IR Light Emitting Diode (LED), etc.) and an IR photodiode. In some embodiments, the IR photodiode may be configured to detect returned IR light at or about the same wavelength to that emitted by the IR light emitting element. In some embodiments, the IR sensors **336** may include at least one processor configured to interpret the returned IR light and determine locational properties of targets. The IR sensors **336** may be configured to detect and/or measure a temperature associated with a target (e.g., an object, pedestrian, other vehicle, etc.). Examples of IR sensors **336** as described herein may include, but are not limited to, at least one of Opto Diode lead-salt IR array sensors, Opto Diode OD-850 Near-IR LED sensors, Opto Diode SA/SHA727 steady state IR emitters and IR detectors, FLIR® LS microbolometer sensors, FLIR® TacFLIR 380-HD InSb MWIR FPA and HD MWIR thermal sensors, FLIR® VOx 640×480 pixel detector sensors, Delphi IR sensors, other industry-equivalent IR sensors and/or systems, and may perform IR visual target and/or obstacle detection in an environment around the vehicle **100** using any known or future-developed standard and/or architecture.

[0058] The vehicle **100** can also include one or more interior sensors **337**. Interior sensors **337** can measure characteristics of the inside environment of the vehicle **100**. The interior sensors **337** may be as described in conjunction with FIG. **3**B.

[0059] A navigation system **302** can include any hardware and/or software used to navigate the vehicle either manually or autonomously. The navigation system **302** may be as described in conjunction with FIG. **3**C.

[0060] In some embodiments, the driving vehicle sensors and systems **304** may include other sensors **338** and/or combinations of the sensors **306-337** described above. Additionally, or alternatively, one or more of the sensors **306-337** described above may include one or more processors configured to process and/or interpret signals detected by the one or more sensors **306-337**. In some embodiments, the processing of at least some sensor information provided by the vehicle sensors and systems **304** may be processed by at least one sensor processor **340**. Raw and/or processed sensor data may be stored in a sensor data memory **344** storage medium. In some embodiments, the sensor data memory **344** may store instructions used by the sensor processor **340** for processing sensor information provided by the sensors and systems **304**. In any event, the sensor data memory **344** may be a disk drive, optical storage device, solid-state storage device such as a Random-Access Memory (RAM) and/or a Read-Only Memory (ROM), which can be programmable, flash-updateable, and/or the like.

[0061] The vehicle control system **348** may receive processed sensor information from the sensor processor **340** and determine to control an aspect of the vehicle **100**. Controlling an aspect of the vehicle **100** may include presenting information via one or more display devices **372** associated with the vehicle, sending commands to one or more computing devices **368** associated with the vehicle, and/or controlling a driving operation of the vehicle. In some embodiments, the vehicle control system **348** may correspond to one or more computing systems that control driving operations of the vehicle **100** in accordance with the Levels of driving autonomy described above. In one embodiment, the vehicle control system **348** may operate a speed of the vehicle **100** by controlling an output signal to the accelerator and/or braking system of the vehicle. In this example, the vehicle control system **348** may receive sensor data describing an environment surrounding the vehicle **100** and, based on the sensor data received, determine to adjust the acceleration, power output, and/or braking of the vehicle **100**. The vehicle control system **348** may additionally control steering and/or other driving functions of the vehicle **100**.

[0062] The vehicle control system **348** may communicate, in real-time, with the driving sensors and systems **304** forming a feedback loop. In particular, upon receiving sensor information describing a condition of targets in the environment surrounding the vehicle **100**, the vehicle control system **348** may autonomously make changes to a driving operation of the vehicle **100**. The vehicle control system **348** may then receive subsequent sensor information describing any change to the condition of the targets detected in the environment as a result of the changes made to the driving operation. This continual cycle of observation (e.g., via the sensors, etc.) and action (e.g., selected control or non-control of vehicle operations, etc.) allows the vehicle **100** to operate autonomously in the environment.

[0063] In some embodiments, the one or more components of the vehicle **100** (e.g., the driving vehicle sensors **304**, vehicle control system **348**, display devices **372**, etc.) may communicate across the communication network **352** to one or more entities **356**A-N via a communications subsystem **350** of the vehicle **100**. Embodiments of the communications subsystem **350** are described in greater detail in conjunction with FIG. **5**. For instance, the navigation sensors **308** may receive global positioning, location, and/or navigational information from a navigation source **356**A. In some embodiments, the navigation source **356**A may be a global navigation satellite system (GNSS) similar, if not identical, to NAVSTAR GPS, GLONASS, EU Galileo, and/or the BeiDou Navigation Satellite System (BDS) to name a few.

[0064] In some embodiments, the vehicle control system **348** may receive control information from one or more control sources **356**B. The control source **356** may provide vehicle control information including autonomous driving control commands, vehicle operation override control commands, and the like. The control source **356** may correspond to an autonomous vehicle control system, a traffic control system, an administrative control entity, and/or some other controlling server. It is an aspect of the present disclosure that the vehicle control system **348** and/or other components of the vehicle **100** may exchange communications with the control source **356** across the communication network **352** and via the communications subsystem **350**.

[0065] Information associated with controlling driving operations of the vehicle **100** may be stored in a control data memory **364** storage medium. The control data memory **364** may store instructions used by the vehicle control system **348** for controlling driving operations of the vehicle **100**, historical control information, autonomous driving control rules, and the like. In some embodiments, the control data memory **364** may be a disk drive, optical storage device, solid-state storage device such as a Random-Access memory (RAM) and/or a Read-Only Memory (ROM), which can be programmable, flash-updateable, and/or the like.

[0066] In addition to the mechanical components described herein, the vehicle **100** may include a number of user interface devices. The user interface devices receive and translate human input into a mechanical movement or electrical signal or stimulus. The human input may be one or more of motion (e.g., body movement, body part movement, in two-dimensional or three-dimensional space, etc.), voice, touch, and/or physical interaction with the components of the vehicle **100**. In some embodiments, the human input may be configured to control one or more functions of the vehicle **100** and/or systems of the vehicle **100** described herein. User interfaces may include, but are in no way limited to, at least one graphical user interface of a display device, steering wheel or mechanism, transmission lever or button (e.g., including park, neutral, reverse, and/or drive positions, etc.), throttle control pedal or mechanism, brake control pedal or mechanism, power control switch, communications equipment, etc.

[0067] FIG. **3**B shows a block diagram of an embodiment of interior sensors **337** for a vehicle **100**. The interior sensors **337** may be arranged into one or more groups, based at least partially on the function of the interior sensors **337**. For example, the interior space of a vehicle **100** may include environmental sensors, user interface sensor(s), and/or safety sensors. Additionally, or alternatively, there may be sensors associated with various devices inside the vehicle (e.g., smart phones, tablets, mobile computers, wearables, etc.)

[0068] Environmental sensors may comprise sensors configured to collect data relating to the internal environment of a vehicle **100**. Examples of environmental sensors may include one or more of, but are not limited to: oxygen/air sensors **301**, temperature sensors **303**, humidity sensors **305**, light/photo sensors **307**, and more. The oxygen/air sensors **301** may be configured to detect a quality or characteristic of the air in the interior space **108** of the vehicle **100** (e.g., ratios and/or types of gasses comprising the air inside the vehicle **100**, dangerous gas levels, safe gas levels, etc.). Temperature sensors **303** may be configured to detect temperature readings of one or more objects, users **216**, and/or areas of a vehicle **100**. Humidity sensors **305** may detect an amount of water vapor present in the air inside the vehicle **100**. The light/photo sensors **307** can detect an amount of light present in the vehicle **100**. Further, the light/photo sensors **307** may be configured to detect various levels of light intensity associated with light in the vehicle **100**.

[0069] User interface sensors may comprise sensors configured to collect data relating to one or more users (e.g., a driver and/or passenger(s)) in a vehicle **100**. As can be appreciated, the user interface sensors may include sensors that are configured to collect data from users **216** in one or more areas of the vehicle **100**. Examples of user interface sensors may include one or more of, but are not limited to: infrared sensors **309**, motion sensors **311**, weight sensors **313**, wireless network sensors **315**, biometric sensors **317**, camera (or image) sensors **319**, audio sensors **321**, and more.

[0070] Infrared sensors **309** may be used to measure IR light irradiating from at least one surface, user, or other object in the vehicle **100**. Among other things, the Infrared sensors **309** may be used to measure temperatures, form images (especially in low light conditions), identify users **216**, and even detect motion in the vehicle **100**.

[0071] The motion sensors **311** may detect motion and/or movement of objects inside the vehicle **100**. Optionally, the motion sensors **311** may be used alone or in combination to detect movement. For example, a user may be operating a vehicle **100** (e.g., while driving, etc.) when a passenger in the rear of the vehicle **100** unbuckles a safety belt and proceeds to move about the vehicle **10**. In this example, the movement of the passenger could be detected by the motion sensors **311**. In response to detecting the movement and/or the direction associated with the movement, the passenger may be prevented from interfacing with and/or accessing at least some of the vehicle control features. As can be appreciated, the user may be alerted of the movement/motion such

that the user can act to prevent the passenger from interfering with the vehicle controls. Optionally, the number of motion sensors in a vehicle may be increased to increase an accuracy associated with motion detected in the vehicle **100**.

[0072] Weight sensors **313** may be employed to collect data relating to objects and/or users in various areas of the vehicle **100**. In some cases, the weight sensors **313** may be included in the seats and/or floor of a vehicle **100**. Optionally, the vehicle **100** may include a wireless network sensor **315**. This sensor **315** may be configured to detect one or more wireless network(s) inside the vehicle **100**. Examples of wireless networks may include, but are not limited to, wireless communications utilizing Bluetooth®, Wi-Fi™, ZigBee, IEEE 802.11, and other wireless technology standards. For example, a mobile hotspot may be detected inside the vehicle **100** via the wireless network sensor **315**. In this case, the vehicle **100** may determine to utilize and/or share the mobile hotspot detected via/with one or more other devices associated with the vehicle **100**.

[0073] Biometric sensors **317** may be employed to identify and/or record characteristics associated with a user. It is anticipated that biometric sensors **317** can include at least one of image sensors, IR sensors, fingerprint readers, weight sensors, load cells, force transducers, heart rate monitors, blood pressure monitors, and the like as provided herein.

[0074] The camera sensors **319** may record still images, video, and/or combinations thereof. Camera sensors **319** may be used alone or in combination to identify objects, users, and/or other features, inside the vehicle **100**. Two or more camera sensors **319** may be used in combination to form, among other things, stereo and/or three-dimensional (3D) images. The stereo images can be recorded and/or used to determine depth associated with objects and/or users in a vehicle **100**. Further, the camera sensors **319** used in combination may determine the complex geometry associated with identifying characteristics of a user. For example, the camera sensors **319** may be used to determine dimensions between various features of a user's face (e.g., the depth/distance from a user's nose to a user's cheeks, a linear distance between the center of a user's eyes, and more). These dimensions may be used to verify, record, and even modify characteristics that serve to identify a user. The camera sensors **319** may also be used to determine movement associated with objects and/or users within the vehicle **100**. It should be appreciated that the number of image sensors used in a vehicle **100** may be increased to provide greater dimensional accuracy and/or views of a detected image in the vehicle **100**.

[0075] The audio sensors **321** may be configured to receive audio input from a user of the vehicle **100**. The audio input from a user may correspond to voice commands, conversations detected in the vehicle **100**, phone calls made in the vehicle **100**, and/or other audible expressions made in the vehicle **100**. Audio sensors **321** may include, but are not limited to, microphones and other types of acoustic-to-electric transducers or sensors. Optionally, the interior audio sensors **321** may be configured to receive and convert sound waves into an equivalent analog or digital signal. The interior audio sensors **321** may serve to determine one or more locations associated with various sounds in the vehicle **100**. The location of the sounds may be determined based on a comparison of volume levels, intensity, and the like, between sounds detected by two or more interior audio sensors **321**. For instance, a first audio sensor **321** may be located in a first area of the vehicle **100** and a second audio sensor **321** may be located in a second area of the vehicle **100**. If a sound is detected at a first volume level by the first audio sensors **321** A and a second, higher, volume level by the second audio sensors **321** in the second area of the vehicle **100**, the sound may be determined to be closer to the second area of the vehicle **100**. As can be appreciated, the number of sound receivers used in a vehicle **100** may be increased (e.g., more than two, etc.) to increase measurement accuracy surrounding sound detection and location, or source, of the sound (e.g., via triangulation, etc.).

[0076] The safety sensors may comprise sensors configured to collect data relating to the safety of a user and/or one or more components of a vehicle **100**. Examples of safety sensors may include one or more of, but are not limited to: force sensors **325**, mechanical motion sensors **327**, orientation sensors **329**, restraint sensors **331**, and more.

[0077] The force sensors **325** may include one or more sensors inside the vehicle **100** configured to detect a force observed in the vehicle **100**. One example of a force sensor **325** may include a force transducer that converts measured forces (e.g., force, weight, pressure, etc.) into output signals. Mechanical motion sensors **327** may correspond to encoders, accelerometers, damped masses, and the like. Optionally, the mechanical motion sensors **327** may be adapted to measure the force of gravity (i.e., G-force) as observed inside the vehicle **100**. Measuring the G-force observed inside a vehicle **100** can provide valuable information related to a vehicle's acceleration, deceleration, collisions, and/or forces that may have been suffered by one or more users in the vehicle **100**. Orientation sensors **329** can include accelerometers, gyroscopes, magnetic sensors, and the like that are configured to detect an orientation associated with the vehicle **100**.

[0078] The restraint sensors **331** may correspond to sensors associated with one or more restraint devices and/or systems in a vehicle **100**. Seatbelts and airbags are examples of restraint devices and/or systems. As can be appreciated, the restraint devices and/or systems may be associated with one or more sensors that are configured to detect a state of the device/system. The state may include extension, engagement, retraction, disengagement, deployment, and/or other electrical or mechanical conditions associated with the device/system.

[0079] The associated device sensors **323** can include any sensors that are associated with a device in the vehicle **100**. As previously stated, typical devices may include smart phones, tablets, laptops, mobile computers, and the like. It is anticipated that the various sensors associated with these devices can be employed by the vehicle control system **348**. For example, a typical smart phone can include, an image sensor, an IR sensor, audio sensor, gyroscope, accelerometer, wireless network sensor, fingerprint reader, and more. It is an aspect of the present disclosure that one or more of these associated device sensors **323** may be used by one or more subsystems of the vehicle **100**.

[0080] FIG. **3**C illustrates a GPS/Navigation subsystem(s) **302**. The navigation subsystem(s) **302** can be any present or future-built navigation system that may use location data, for example, from the Global Positioning System (GPS), to provide navigation information or control the vehicle **100**. The navigation subsystem(s) **302** can include several components, such as, one or more of, but not limited to: a GPS Antenna/receiver **331**, a location module **333**, a maps data-

base **335**, etc. Generally, the several components or modules **331-335** may be hardware, software, firmware, computer readable media, or combinations thereof.

[0081] A GPS Antenna/receiver **331** can be any antenna, GPS puck, and/or receiver capable of receiving signals from a GPS satellite or other navigation system. The signals may be demodulated, converted, interpreted, etc. by the GPS Antenna/receiver **331** and provided to the location module **333**. Thus, the GPS Antenna/receiver **331** may convert the time signals from the GPS system and provide a location (e.g., coordinates on a map) to the location module **333**. Alternatively, the location module **333** can interpret the time signals into coordinates or other location information.

[0082] The location module **333** can be the controller of the satellite navigation system designed for use in the vehicle **100**. The location module **333** can acquire position data, as from the GPS Antenna/receiver **331**, to locate the user or vehicle **100** on a road in the unit's map database **335**. Using the road database **335**, the location module **333** can give directions to other locations along roads also in the database **335**. When a GPS signal is not available, the location module **333** may apply dead reckoning to estimate distance data from sensors **304** including one or more of, but not limited to, a speed sensor attached to the drive train of the vehicle **100**, a gyroscope, an accelerometer, etc. Additionally, or alternatively, the location module **333** may use known locations of Wi-Fi hotspots, cell tower data, etc. to determine the position of the vehicle **100**, such as by using Time Difference Of Arrival (TDOA) and/or Frequency Difference Of Arrival (FDOA) techniques.

[0083] The maps database **335** can include any hardware and/or software to store information about maps, Geographical Information System (GIS) information, location information, etc. The maps database **335** can include any data definition or other structure to store the information. Generally, the maps database **335** can include a road database that may include one or more vector maps of areas of interest. Street names, street numbers, house numbers, and other information can be encoded as geographic coordinates so that the user can find some desired destination by street address. Points of interest (waypoints) can also be stored with their geographic coordinates. For example, a point of interest may include speed cameras, fuel stations, public parking, and "parked here" (or "you parked here") information. The maps database **335** may also include road or street characteristics, for example, speed limits, location of stop lights/stop signs, lane divisions, school locations, etc. The map database contents can be produced or updated by a server connected through a wireless system in communication with the Internet, even as the vehicle **100** is driven along existing streets, yielding an up-to-date map.

[0084] The vehicle control system **348**, when operating in L4 or L5 and based on sensor information from the external and interior vehicle sensors, can control the driving behavior of the vehicle in response to the current vehicle location, sensed object information, sensed vehicle occupant information, vehicle-related information, exterior environmental information, and navigation information from the maps database **335**.

[0085] The sensed object information refers to sensed information regarding objects external to the vehicle. Examples include animate objects such as animals and attributes thereof (e.g., animal type, current spatial location, current activity, etc.), and pedestrians and attributes thereof (e.g., identity, age, sex, current spatial location, current activity, etc.), and the like and inanimate objects and attributes thereof such as other vehicles (e.g., current vehicle state or activity (parked or in motion or level of automation currently employed), occupant or operator identity, vehicle type (truck, car, etc.), vehicle spatial location, etc.), curbs (topography and spatial location), potholes (size and spatial location), lane division markers (type or color and spatial locations), signage (type or color and spatial locations such as speed limit signs, yield signs, stop signs, and other restrictive or warning signs), traffic signals (e.g., red, yellow, blue, green, etc.), buildings (spatial locations), walls (height and spatial locations), barricades (height and spatial location), and the like.

[0086] The sensed occupant information refers to sensed information regarding occupants internal to the vehicle. Examples include the number and identities of occupants and attributes thereof (e.g., seating position, age, sex, gaze direction, biometric information, authentication information, preferences, historic behavior patterns (such as current or historical user driving behavior, historical user route, destination, and waypoint preferences), nationality, ethnicity and race, language preferences (e.g., Spanish, English, Chinese, etc.), current occupant role (e.g., operator or passenger), occupant priority ranking (e.g., vehicle owner is given a higher ranking than a child occupant), electronic calendar information (e.g., Outlook™), and medical information and history, etc.

[0087] The vehicle-related information refers to sensed information regarding the selected vehicle. Examples include vehicle manufacturer, type, model, year of manufacture, current geographic location, current vehicle state or activity (parked or in motion or level of automation currently employed), vehicle specifications and capabilities, currently sensed operational parameters for the vehicle, and other information.

[0088] The exterior environmental information refers to sensed information regarding the external environment of the selected vehicle. Examples include road type (pavement, gravel, brick, etc.), road condition (e.g., wet, dry, icy, snowy, etc.), weather condition (e.g., outside temperature, pressure, humidity, wind speed and direction, etc.), ambient light conditions (e.g., time-of-day), degree of development of vehicle surroundings (e.g., urban or rural), and the like.

[0089] In a typical implementation, the automated vehicle control system **348**, based on feedback from certain sensors, specifically the LIDAR and radar sensors positioned around the circumference of the vehicle, constructs a three-dimensional map in spatial proximity to the vehicle that enables the automated vehicle control system **348** to identify and spatially locate animate and inanimate objects. Other sensors, such as inertial measurement units, gyroscopes, wheel encoders, sonar sensors, motion sensors to perform odometry calculations with respect to nearby moving exterior objects, and exterior facing cameras (e.g., to perform computer vision processing) can provide further contextual information for generation of a more accurate three-dimensional map. The navigation information is combined with the three-dimensional map to provide short, intermediate and long-range course tracking and route selection. The vehicle control system **348** processes real-world information as well as GPS data, and driving speed to determine accu-

rately the precise position of each vehicle, down to a few centimeters all while making corrections for nearby animate and inanimate objects.

[0090] The vehicle control system **348** can process in substantial real time the aggregate mapping information and models (or predicts) behavior of occupants of the current vehicle and other nearby animate or inanimate objects and, based on the aggregate mapping information and modeled behavior, issues appropriate commands regarding vehicle operation. While some commands are hard-coded into the vehicle, such as stopping at red lights and stop signs, other responses are learned and recorded by profile updates based on previous driving experiences. Examples of learned behavior include a slow-moving or stopped vehicle or emergency vehicle in a right lane suggests a higher probability that the car following it will attempt to pass, a pot hole, rock, or other foreign object in the roadway equates to a higher probability that a driver will swerve to avoid it, and traffic congestion in one lane means that other drivers moving in the same direction will have a higher probability of passing in an adjacent lane or by driving on the shoulder.

[0091] FIG. **4** shows one embodiment of the instrument panel **400** of the vehicle **100**. The instrument panel **400** of vehicle **100** comprises a steering wheel **410**, a vehicle operational display **420** (e.g., configured to present and/or display driving data such as speed, measured air resistance, vehicle information, entertainment information, etc.), one or more auxiliary displays **424** (e.g., configured to present and/or display information segregated from the operational display **420**, entertainment applications, movies, music, etc.), a heads-up display **434** (e.g., configured to display any information previously described including, but in no way limited to, guidance information such as route to destination, or obstacle warning information to warn of a potential collision, or some or all primary vehicle operational data such as speed, resistance, etc.), a power management display **428** (e.g., configured to display data corresponding to electric power levels of vehicle **100**, reserve power, charging status, etc.), and an input device **432** (e.g., a controller, touchscreen, or other interface device configured to interface with one or more displays in the instrument panel or components of the vehicle **100**. The input device **432** may be configured as a joystick, mouse, touchpad, tablet, 3D gesture capture device, etc.). In some embodiments, the input device **432** may be used to manually maneuver a portion of the vehicle **100** into a charging position (e.g., moving a charging plate to a desired separation distance, etc.).

[0092] While one or more of displays of instrument panel **400** may be touch-screen displays, it should be appreciated that the vehicle operational display may be a display incapable of receiving touch input. For instance, the operational display **420** that spans across an interior space centerline **404** and across both a first zone **408**A and a second zone **408**B may be isolated from receiving input from touch, especially from a passenger. In some cases, a display that provides vehicle operation or critical systems information and interface may be restricted from receiving touch input and/or be configured as a non-touch display. This type of configuration can prevent dangerous mistakes in providing touch input where such input may cause an accident or unwanted control.

[0093] In some embodiments, one or more displays of the instrument panel **400** may be mobile devices and/or applications residing on a mobile device such as a smart phone. Additionally, or alternatively, any of the information described herein may be presented to one or more portions **420**A-N of the operational display **420** or other display **424**, **428**, **434**. In one embodiment, one or more displays of the instrument panel **400** may be physically separated or detached from the instrument panel **400**. In some cases, a detachable display may remain tethered to the instrument panel.

[0094] The portions **420**A-N of the operational display **420** may be dynamically reconfigured and/or resized to suit any display of information as described. Additionally, or alternatively, the number of portions **420**A-N used to visually present information via the operational display **420** may be dynamically increased or decreased as required, and are not limited to the configurations shown.

[0095] FIG. **5** illustrates a hardware diagram of communications componentry that can be optionally associated with the vehicle **100** in accordance with embodiments of the present disclosure.

[0096] The communications componentry can include one or more wired or wireless devices such as a transceiver(s) and/or modem that allows communications not only between the various systems disclosed herein but also with other devices, such as devices on a network, and/or on a distributed network such as the Internet and/or in the cloud and/or with another vehicle(s).

[0097] The communications subsystem **350** can also include inter- and intra-vehicle communications capabilities such as hotspot and/or access point connectivity for any one or more of the vehicle occupants and/or vehicle-to-vehicle communications.

[0098] Additionally, and while not specifically illustrated, the communications subsystem **350** can include one or more communications links (that can be wired or wireless) and/or communications busses (managed by the bus manager **574**), including one or more of Controller Area Network (CAN) bus, OBD-II, ARCINC 429, Byteflight, Domestic Digital Bus (D2B), FlexRay, DC-BUS, IDB-1394, IEBus, I2C, ISO 9141-1/-2, J1708, J1587, J1850, J1939, ISO 11783, Keyword Protocol 2000, Local Interconnect Network (LIN), Media Oriented Systems Transport (MOST), Multifunction Vehicle Bus, SMARTwireX, SPI, Vehicle Area Network (VAN), and the like or in general any communications protocol and/or standard(s).

[0099] The various protocols and communications can be communicated one or more of wirelessly and/or over transmission media such as single wire, twisted pair, fiber optic, IEEE 1394, MIL-STD-1553, MIL-STD-1773, power-line communication, or the like. (All of the above standards and protocols are incorporated herein by reference in their entirety).

[0100] As discussed, the communications subsystem **350** enables communications between any of the inter-vehicle systems and subsystems as well as communications with non-collocated resources, such as those reachable over a network such as the Internet.

[0101] The communications subsystem **350**, in addition to well-known componentry (which has been omitted for clarity), includes interconnected elements including one or more of: one or more antennas **504**, an interleaver/deinterleaver **508**, an analog front end (AFE) **512**, memory/storage/cache **516**, controller/microprocessor **520**, MAC circuitry **522**, modulator/demodulator **524**, encoder/decoder **528**, a plurality of connectivity managers **534**, **558**, **562**, **566**, GPU **540**,

accelerator **544**, a multiplexer/demultiplexer **552**, transmitter **570**, receiver **572** and additional wireless radio components such as a Wi-Fi PHY/Bluetooth® module **580**, a Wi-Fi/BT MAC module **584**, additional transmitter(s) **588** and additional receiver(s) **592**. The various elements in the device **350** are connected by one or more links/busses **5** (not shown, again for sake of clarity).

[0102] The device **350** can have one more antennas **504**, for use in wireless communications such as Multi-Input Multi-Output (MIMO) communications, Multi-User Multi-Input Multi-Output (MU-MIMO) communications Bluetooth®, LTE, 4G, 5G, Near-Field Communication (NFC), etc., and in general for any type of wireless communications. The antenna(s) **504** can include, but are not limited to one or more of directional antennas, omnidirectional antennas, monopoles, patch antennas, loop antennas, microstrip antennas, dipoles, and any other antenna(s) suitable for communication transmission/reception. In an exemplary embodiment, transmission/reception using MIMO may require particular antenna spacing. In another exemplary embodiment, MIMO transmission/reception can enable spatial diversity allowing for different channel characteristics at each of the antennas. In yet another embodiment, MIMO transmission/reception can be used to distribute resources to multiple users for example within the vehicle **100** and/or in another vehicle.

[0103] Antenna(s) **504** generally interact with the Analog Front End (AFE) **512**, which is needed to enable the correct processing of the received modulated signal and signal conditioning for a transmitted signal. The AFE **512** can be functionally located between the antenna and a digital baseband system to convert the analog signal into a digital signal for processing and vice-versa.

[0104] The subsystem **350** can also include a controller/microprocessor **520** and a memory/storage/cache **516**. The subsystem **350** can interact with the memory/storage/cache **516** which may store information and operations necessary for configuring and transmitting or receiving the information described herein. The memory/storage/cache **516** may also be used in connection with the execution of application programming or instructions by the controller/microprocessor **520**, and for temporary or long-term storage of program instructions and/or data. As examples, the memory/storage/cache **520** may comprise a computer-readable device, RAM, ROM, DRAM, SDRAM, and/or other storage device(s) and media.

[0105] The controller/microprocessor **520** may comprise a general-purpose programmable processor or controller for executing application programming or instructions related to the subsystem **350**. Furthermore, the controller/microprocessor **520** can perform operations for configuring and transmitting/receiving information as described herein. The controller/microprocessor **520** may include multiple processor cores, and/or implement multiple virtual processors. Optionally, the controller/microprocessor **520** may include multiple physical processors. By way of example, the controller/microprocessor **520** may comprise a specially configured Application Specific Integrated Circuit (ASIC) or other integrated circuit, a digital signal processor(s), a controller, a hardwired electronic or logic circuit, a programmable logic device or gate array, a special purpose computer, or the like.

[0106] The subsystem **350** can further include a transmitter(s) **570**, **588** and receiver(s) **572**, **592** which can transmit and receive signals, respectively, to and from other devices, subsystems and/or other destinations using the one or more antennas **504** and/or links/busses. Included in the subsystem **350** circuitry is the medium access control or MAC Circuitry **522**. MAC circuitry **522** provides for controlling access to the wireless medium. In an exemplary embodiment, the MAC circuitry **522** may be arranged to contend for the wireless medium and configure frames or packets for communicating over the wired/wireless medium.

[0107] The subsystem **350** can also optionally contain a security module (not shown). This security module can contain information regarding but not limited to, security parameters required to connect the device to one or more other devices or other available network(s), and can include WEP or WPA/WPA-2 (optionally+AES and/or TKIP) security access keys, network keys, etc. The WEP security access key is a security password used by Wi-Fi networks. Knowledge of this code can enable a wireless device to exchange information with an access point and/or another device. The information exchange can occur through encoded messages with the WEP access code often being chosen by the network administrator. WPA is an added security standard that is also used in conjunction with network connectivity with stronger encryption than WEP.

[0108] In some embodiments, the communications subsystem **350** also includes a GPU **540**, an accelerator **544**, a Wi-Fi/BT/BLE (Bluetooth® Low-Energy) PHY module **580** and a Wi-Fi/BT/BLE MAC module **584** and optional wireless transmitter **588** and optional wireless receiver **592**. In some embodiments, the GPU **540** may be a graphics processing unit, or visual processing unit, comprising at least one circuit and/or chip that manipulates and changes memory to accelerate the creation of images in a frame buffer for output to at least one display device. The GPU **540** may include one or more of a display device connection port, Printed Circuit Board (PCB), a GPU chip, a Metal-Oxide-Semiconductor Field-Effect Transistor (MOSFET), memory (e.g., Single Data rate Random-Access Memory (SDRAM), Double Data Rate Random-Access Memory (DDR RAM), etc., and/or combinations thereof), a secondary processing chip (e.g., handling video out capabilities, processing, and/or other functions in addition to the GPU chip, etc.), a capacitor, heatsink, temperature control or cooling fan, motherboard connection, shielding, and the like.

[0109] The various connectivity managers **534**, **558**, **562**, **566** manage and/or coordinate communications between the subsystem **350** and one or more of the systems disclosed herein and one or more other devices/systems. The connectivity managers **534**, **558**, **562**, **566** include a charging connectivity manager **534**, a vehicle database connectivity manager **558**, a remote operating system connectivity manager **562**, and a sensor connectivity manager **566**.

[0110] The charging connectivity manager **534** can coordinate not only the physical connectivity between the vehicle **100** and a charging device/vehicle, but can also communicate with one or more of a power management controller, one or more third parties and optionally a billing system(s). As an example, the vehicle **100** can establish communications with the charging device/vehicle to one or more of coordinate interconnectivity between the two (e.g., by spatially aligning the charging receptacle on the vehicle with the charger on the charging vehicle) and optionally share navigation information. Once charging is complete, the amount of charge provided can be tracked and optionally

forwarded to, for example, a third party for billing. In addition to being able to manage connectivity for the exchange of power, the charging connectivity manager **534** can also communicate information, such as billing information to the charging vehicle and/or a third party. This billing information could be, for example, the owner of the vehicle, the driver/occupant(s) of the vehicle, company information, or in general any information usable to charge the appropriate entity for the power received.

[0111] The vehicle database connectivity manager **558** allows the subsystem to receive and/or share information stored in the vehicle database. This information can be shared with other vehicle components/subsystems and/or other entities, such as third parties and/or charging systems. The information can also be shared with one or more vehicle occupant devices, such as an app (application) on a mobile device the driver uses to track information about the vehicle **100** and/or a dealer or service/maintenance provider. In general, any information stored in the vehicle database can optionally be shared with any one or more other devices optionally subject to any privacy or confidentially restrictions.

[0112] The remote operating system connectivity manager **562** facilitates communications between the vehicle **100** and any one or more autonomous vehicle systems. These communications can include one or more of navigation information, vehicle information, other vehicle information, weather information, occupant information, or in general any information related to the remote operation of the vehicle **100**.

[0113] The sensor connectivity manager **566** facilitates communications between any one or more of the vehicle sensors (e.g., the driving vehicle sensors and systems **304**, etc.) and any one or more of the other vehicle systems. The sensor connectivity manager **566** can also facilitate communications between any one or more of the sensors and/or vehicle systems and any other destination, such as a service company, app, or in general to any destination where sensor data is needed.

[0114] In accordance with one exemplary embodiment, any of the communications discussed herein can be communicated via the conductor(s) used for charging. One exemplary protocol usable for these communications is Power-Line Communication (PLC). PLC is a communication protocol that uses electrical wiring to simultaneously carry both data, and Alternating Current (AC) electric power transmission or electric power distribution. It is also known as power-line carrier, Power-line Digital Subscriber Line (PDSL), mains communication, power-line telecommunications, or Power-Line Networking (PLN). For DC environments in vehicles PLC can be used in conjunction with CAN-bus, LIN-bus over power line (DC-LIN) and DC-BUS.

[0115] The communications subsystem can also optionally manage one or more identifiers, such as an Internet Protocol (IP) address(es), associated with the vehicle and one or other system or subsystems or components and/or devices therein. These identifiers can be used in conjunction with any one or more of the connectivity managers as discussed herein.

[0116] FIG. **6** illustrates a block diagram of a computing environment **600** that may function as the servers, user computers, or other systems provided and described herein. The computing environment **600** includes one or more user computers, or computing devices, such as a vehicle computing device **604**, a communication device **608**, and/or more **612**. The computing devices **604**, **608**, **612** may include general purpose personal computers (including, merely by way of example, personal computers, and/or laptop computers running various versions of Microsoft Corp.'s Windows® and/or Apple Corp.'s Macintosh® operating systems) and/or workstation computers running any of a variety of commercially-available UNIX® or UNIX-like operating systems. These computing devices **604**, **608**, **612** may also have any of a variety of applications, including for example, database client and/or server applications, and web browser applications. Alternatively, the computing devices **604**, **608**, **612** may be any other electronic device, such as a thin-client computer, Internet-enabled mobile telephone, and/or personal digital assistant, capable of communicating via a network **352** and/or displaying and navigating web pages or other types of electronic documents or information. Although the exemplary computing environment **600** is shown with two computing devices, any number of user computers or computing devices may be supported.

[0117] The computing environment **600** may also include one or more servers **614**, **616**. In this example, server **614** is shown as a web server and server **616** is shown as an application server. The web server **614**, which may be used to process requests for web pages or other electronic documents from computing devices **604**, **608**, **612**. The web server **614** can be running an operating system including any of those discussed above, as well as any commercially-available server operating systems. The web server **614** can also run a variety of server applications, including Session Initiation Protocol (SIP) servers, HyperText Transport Protocol (secure) (HTTP(s)) servers, File Transfer Protocol (FTP) servers, Common Gateway Interface (CGI) servers, database servers, Java® servers, and the like. In some instances, the web server **614** may publish operations available operations as one or more web services.

[0118] The computing environment **600** may also include one or more file and or/application servers **616**, which can, in addition to an operating system, include one or more applications accessible by a client running on one or more of the computing devices **604**, **608**, **612**. The server(s) **616** and/or **614** may be one or more general purpose computers capable of executing programs or scripts in response to the computing devices **604**, **608**, **612**. As one example, the server **616**, **614** may execute one or more web applications. The web application may be implemented as one or more scripts or programs written in any programming language, such as Java®, C, C#®, or C++, and/or any scripting language, such as Perl, Python, or TCL, as well as combinations of any programming/scripting languages. The application server(s) **616** may also include database servers, including without limitation those commercially available from Oracle®, Microsoft®, Sybase®, IBM® and the like, which can process requests from database clients running on a computing device **604**, **608**, **612**.

[0119] The web pages created by the server **614** and/or **616** may be forwarded to a computing device **604**, **608**, **612** via a web (file) server **614**, **616**. Similarly, the web server **614** may be able to receive web page requests, web services invocations, and/or input data from a computing device **604**, **608**, **612** (e.g., a user computer, etc.) and can forward the web page requests and/or input data to the web (application) server **616**. In further embodiments, the server **616** may function as a file server. Although for ease of description,

FIG. **6** illustrates a separate web server **614** and file/application server **616**, those skilled in the art will recognize that the functions described with respect to servers **614**, **616** may be performed by a single server and/or a plurality of specialized servers, depending on implementation-specific needs and parameters. The computer systems **604**, **608**, **612**, web (file) server **614** and/or web (application) server **616** may function as the system, devices, or components described in FIGS. **1**-**6**.

[0120] The computing environment **600** may also include a database **618**. The database **618** may reside in a variety of locations. By way of example, database **618** may reside on a storage medium local to (and/or resident in) one or more of the computers **604**, **608**, **612**, **614**, **616**. Alternatively, it may be remote from any or all of the computers **604**, **608**, **612**, **614**, **616**, and in communication (e.g., via the network **352**) with one or more of these. The database **618** may reside in a Storage-Area Network (SAN) familiar to those skilled in the art. Similarly, any necessary files for performing the functions attributed to the computers **604**, **608**, **612**, **614**, **616** may be stored locally on the respective computer and/or remotely, as appropriate. The database **618** may be a relational database, such as Oracle 20i®, that is adapted to store, update, and retrieve data in response to SQL-formatted commands.

[0121] FIG. **7** illustrates one embodiment of a computer system **700** upon which the servers, user computers, computing devices, or other systems or components described above may be deployed or executed. The computer system **700** is shown comprising hardware elements that may be electrically coupled via a bus **704**. The hardware elements may include one or more central processing units (CPUs) **708**; one or more input devices **712** (e.g., a mouse, a keyboard, etc.); and one or more output devices **716** (e.g., a display device, a printer, etc.). The computer system **700** may also include one or more storage devices **720**. By way of example, storage device(s) **720** may be disk drives, optical storage devices, solid-state storage devices such as a Random-Access Memory (RAM) and/or a Read-Only Memory (ROM), which can be programmable, flash-updateable and/or the like.

[0122] The computer system **700** may additionally include a computer-readable storage media reader **724**; a communications system **728** (e.g., a modem, a network card (wireless or wired), an infra-red communication device, etc.); and working memory **736**, which may include RAM and ROM devices as described above. The computer system **700** may also include a processing acceleration unit **732**, which can include a DSP, a special-purpose processor, and/or the like.

[0123] The computer-readable storage media reader **724** can further be connected to a computer-readable storage medium, together (and, optionally, in combination with storage device(s) **720**) comprehensively representing remote, local, fixed, and/or removable storage devices plus storage media for temporarily and/or more permanently containing computer-readable information. The communications system **728** may permit data to be exchanged with a network and/or any other computer described above with respect to the computer environments described herein. Moreover, as disclosed herein, the term "storage medium" may represent one or more devices for storing data, including Read-Only Memory (ROM), Random Access Memory (RAM), magnetic RAM, core memory, magnetic disk storage mediums, optical storage mediums, flash memory devices and/or other machine-readable mediums for storing information.

[0124] The computer system **700** may also comprise software elements, shown as being currently located within a working memory **736**, including an operating system **740** and/or other code **744**. It should be appreciated that alternate embodiments of a computer system **700** may have numerous variations from that described above. For example, customized hardware might also be used and/or particular elements might be implemented in hardware, software (including portable software, such as applets), or both. Further, connection to other computing devices such as network input/output devices may be employed.

[0125] Examples of the processors **340**, **708** as described herein may include, but are not limited to, at least one of Qualcomm® Snapdragon® 800 and 801, Qualcomm® Snapdragon® 620 and 615 with 4G LTE Integration and 64-bit computing, Apple® A7 processor with 64-bit architecture, Apple® M7 motion coprocessors, Samsung® Exynos® series, the Intel® Core™ family of processors, the Intel® Xeon® family of processors, the Intel® Atom™ family of processors, the Intel Itanium® family of processors, Intel® Core® i5-4670K and i7-4770K 22 nm Haswell, Intel® Core® i5-3570K 22 nm Ivy Bridge, the AMD® FX™ family of processors, AMD® FX-4300, FX-6300, and FX-8350 32 nm Vishera, AMD® Kaveri processors, Texas Instruments® Jacinto C6000™ automotive infotainment processors, Texas Instruments® OMAP™ automotive-grade mobile processors, ARM® Cortex™-M processors, ARM® Cortex-A and ARM926EJ-S™ processors, other industry-equivalent processors, and may perform computational functions using any known or future-developed standard, instruction set, libraries, and/or architecture.

[0126] Visualizations of embodiments for both segmenting routes and for using feature vectors for location identification may be as shown in FIGS. **8**A-**8**H. In FIG. **8**A, a visualization **800** of a digital may represent a vehicle **100** be traveling between an origination point **804** and a destination **812**. The vehicle **100** may travel along a route **816**. For driverless vehicles and for location with GPS systems or other types of navigation systems, the vehicle **100** may use GPS to determine a general location **820** of the vehicle **100**. Additionally, or alternatively, the general location **820** may be determined by dead reckoning, visual odometry, particle filtering, and/or another process.

[0127] Dead reckoning may be the process of calculating the vehicle's position by estimating the direction and distance traveled rather than by using landmarks, astronomical observations, or electronic navigation methods. Visual odometry is related to dead reckoning in that, in computer vision systems (for example, the autonomous vehicle), visual odometry is the process of determining the position and orientation of the vehicle by analyzing the associated camera images. The analysis of a consecutive or a sequence of camera images, in visual odometry, can estimate the direction and distance traveled that is used for dead reckoning. Particle filtering can be the process of weighting and eliminating road segments, and therefore, which feature vectors, may be associated with the vehicle's position. A feature vector can be any type of visualization of an environment around a vehicle **100** at a segment **824**. The feature vector may be comprised of observations of machine view of structures or static targets in the environment. The feature

vector may include the outlines or partial outlines of the targets, may include a single target or multiple targets, etc. Using the process above, the vehicle **100** can weight road segments as more likely to be the exact location of the vehicle **100** if those road segments are nearer the determined position derived from GPS or dead reckoning.

[0128] Due to vagaries in signal accuracy of the GPS signal, due to interference of the GPS signal, or due to the inexactness of the dead reckoning, visual odometry, particle filtering processes above, the exact location of the vehicle **100** may be anywhere within some area represented by box **820**. For example, the vehicle **100** may be within one to three meters of the vehicle's actual exact location. As such, without determining the exact position, the navigation system of the vehicle **100** may locate the vehicle **100** in an incorrect position (e.g., outside a lane or off a road surface) when the vehicle **100** may actually be driving down the middle of the lane or road. Due to these errors or inaccuracies, the vehicle **100** may not rely GPS for driverless or autonomous operation, but requires several other sensors to keep the vehicle **100** in the correct position on the road.

[0129] In a representation **822** of embodiments presented herein, the vehicle **100** may be traveling down a route **816** as shown FIG. **8**B. This route **816** may be broken into or represented by two or more sections or segments **824***a*-**824***h*. Each segment **824** of the route **816** may have associated therewith data, such as feature vector data.

[0130] The segment **824** can be located at the middle of the lane, and thus, when the vehicle **100** determines the nearest segment **824**, the vehicle **100** can assume the vehicle's position is in the middle of the lane or the vehicle **100** can determine an error (how far from the vehicle is) from the middle of the lane or from the segment **824**. This error from one or more segments **824** can be based on differences in the feature vectors described hereinafter.

[0131] The segments may have any type of frequency or separation. For example, the segment **824***a* may be a millimeter, an inch, a foot, etc. from segment **824***b*. As such, the vehicle **100** can have a more granulated or more precise location understanding based on a higher number of segments **824** per route **816**.

[0132] In other embodiments, the route or the surface of the road **828** may be designated by a series of segments **824** spread throughout the area **828**. In this way, the vehicle **100** can know where the vehicle is in substantially all of the road surface **828** rather than just at or near the middle of the road as shown with feature vectors **824***a*-**824***h*. Regardless of how the segments **824**, **828** are positioned within the route **816**, the route **816** can have segments **824** associated therewith, and each of the segments **824** may have data associated therewith describing the segment's position and other information associated therewith as described in conjunction with FIGS. **9**B-**9**C.

[0133] FIGS. **8**C-**8**E show schematic views of machine vision or imaging sensor information **832**, **836**, **840**, detected by at least one imaging system of the vehicle **100**, describing a visual environment (e.g., at some point at or around the vehicle **100**) that changes over time (e.g., while the vehicle **100** is driving, etc.). In some circumstances, the imaging system may be one or more of the imaging sensors **116**A, **116**F, **332**, **336** (e.g., a camera, etc.) described above. The schematic views of FIGS. **8**C-**8**E show computer-generated images **832**, **836**, **840** including one or more targets **844**A-E that are detected as changing in shape, size, range, and/or geometry while the vehicle **100** is operating along a path **848** or roadway.

[0134] FIG. **8**C shows a schematic view of imaging sensor information **166** detected by the imaging system of the vehicle **100** at a first time of travel T**1** in accordance with embodiments of the present disclosure. The vehicle **100** may be driving down a street, roadway, or other driving path **848**. As the vehicle **100** is driving, the imaging system **116** may visually detect targets **844**A-E in a sensing area of the imaging system **116** describing (e.g., visually) an environment outside of the vehicle **100**. The environment may include a first target **844**A (e.g., a roadway edge, a street curb, another vehicle, a pedestrian, an object, etc.) on the roadway **848**, and/or one or more other targets **844**B-E (e.g., buildings, landmarks, signs, markers, etc.).

[0135] As the vehicle **100** moves along the path **848**, visual characteristics associated with the targets **844**A-E may change at a second time T**2**. FIG. **8**D shows a schematic view of imaging sensor information **802** detected by the imaging system **116** of the vehicle **100** at a second time of travel T**2** in accordance with embodiments of the present disclosure. In FIG. **8**D, the range to all of the targets **844**A-E has changed. For example, the size and shape of the building targets **844**B, **844**D, **844**E have increased in dimension at the second time T**2**, while building target **844**C is shown moving off-image.

[0136] As the vehicle **100** continues to move along the path **848** at a subsequent time, the visual characteristics associated with the targets **844**A-E may continue to change. In FIG. **8**E, a schematic view of imaging sensor information detected by the imaging system **116** of the vehicle **100** at a third time of travel T**3** is shown in accordance with embodiments of the present disclosure. FIG. **8**E shows that target information has changed to include a larger shape and size associated with some targets, while other targets have moved completely off-image. For instance, the building target **844**B has increased in shape and size, while building target **844**D is shown moving off-image and building targets **844**C, **844**E have moved completely off-image. In some embodiments, FIGS. **8**C-**8**E show imaging sensor information changing over time (e.g., T**1**-T**3**) which can be the basis for visual odometry.

[0137] In view **832**, a vehicle **100** may at a first road segment, for example, segment **824**A, and may view buildings and other structures through one or more image sensors **116** or other sensors **304** at time T**1**. The visualization **832** can include one or more building targets or structures **844**B-**844**E. Each of these structures **844**B-**844**E can provide for a two-dimensional or 3D image associated with the segment **824**. The segment **824** may be then positioned within a roadway **848** to determine the local position of the vehicle.

[0138] When the vehicle moves to a next segment as shown in view **836**, the machine view **836** may change with buildings **844**B-**844**E in different positions. By matching the visualization **832**, **836** with stored information about each segment, the vehicle **100** can determine where on roadway **848** the vehicle **100** is currently located. If the views **832** and **836** do not necessarily match completely with the stored feature vectors associated with the segment **824**, the vehicle **100** may extrapolate a position based on the vehicle's location or the locations of structures **844**B-**844**E in comparison to the data stored in the vehicle database. At a further segment **824** arrived at time T**3**, shown in view **840**, some

of the buildings have disappeared and only buildings **844**B and **844**D are present. Thus, the vehicle **100** is further along the roadway **848**. While buildings are shown as being used for characteristic localization, other types of structures or physical things may be used. For example, doorways, trees, fire hydrants, windows, street curbs, street lights, stop signs, etc. can be used to determine where a vehicle **100** is located or what may be viewed by vehicle sensors at a certain segment **824**.

[0139] Another view **832** of roadway **848** may be as shown in FIG. **8**F. In some configurations, the complete outlines or visualizations of the targets (e.g., buildings **844**) are not used for localization. Rather, the features may comprise only portions of the targets **844** that are used to determine a location for the vehicle **100**. For example, each building **844** may be broken into certain structures or elements that may be viewed by the vehicle **100**. For example, feature vectors **852**A-**852**F may represent only the corners of the buildings **844**. By storing information or characteristics about these features **852**, the vehicle **100** does not need to match up a complete machine visualization of all items within the view **832** to a stored image to determine a vehicle position. Rather, each feature vector **852** may only describe one or more portions of one or more targets **844** associated with the segment **824**. Further, just essential data may be stored about each feature vector to determine the localization. The feature vector information may be as described in conjunction with FIG. **9**B.

[0140] As shown in FIGS. **8**G and **8**H, the vehicle **100** can use different information in view **832** than that shown in FIG. **8**D or **8**E. At a next segment **824**, shown in FIG. **8**G, the superfluous information from view **832** is extracted in view **836**. For example, in comparing FIG. **8**D with FIG. **8**G, the feature vectors **852**, shown in FIG. **8**G, eliminate extraneous information not used for the feature vectors, as shown in FIG. **8**D. In this way, the feature vectors **852** become easier to identify and contain less information overall than providing information about the entire view **836**.

[0141] In still a further segment **824**, shown in FIG. **8**H which is a derivation of the view **840** in FIG. **8**E, the feature vectors **852** are shown without the representative circles. Thus, feature vector **852**C, **852**G, **8852**H, contain all information of the view used to localize or identify the position of the vehicle **100** at the segment **824** at the locale on the road **848**. In this way, the view **840** provides a much smaller data set for the feature vector(s) that can be stored locally in the vehicle **100** and used to identify the locale of the vehicle **100**.

[0142] To accomplish the localization, the vehicle **100** can attempt to match the view of feature vector(s) **852** to information previously stored about feature vectors inside a database. An exact match can provide for the exact location of the vehicle **100** at the segment **824**. As the vehicle **100** continues to travel on the route **816** and goes to the next segment **824**, each segment **824** can be matched up by the feature vectors **852** stored for the next segment **824** in the vehicle **100**, and thus the vehicle **100** can deduce the location of the vehicle **100**. In this way, the vehicle **100** can determine a much more exact location compared to using GPS or by using other processes described above.

[0143] An embodiment of data store **356** for the navigation source containing geographic information system information **904** may be as shown in FIG. **9**A. This GIS information **904** stores the different segments of routes or roadways combined with feature vector information. An embodiment of some of the information in the GIS information **904** may be as shown in FIG. **9**B.

[0144] A data structure **908**, which contains segment information for a route or roadway section, may be as shown in FIG. **9**B. The data structure **908** can include one or more of, but is not limited to, a segment identifier (ID) **912**, a latitude **916**, a longitude **920**, GIS information **924**, feature information or feature characteristics **928**A-**928**N, and/or metadata **932**. There may be one or more features **852** associated with the segment **824** and there may be more or fewer feature information fields **928** than those shown in FIG. **9**B, as represented by ellipsis **938**. There also may be more or fewer fields than those shown in data structure **908**, as represented by ellipsis **936**. For each segment **824***a*-**824***h* there may a different data structure **908** and thus there may be more data structures **908** than those shown in FIG. **9**B, as represented by ellipsis **940**.

[0145] The segment identifier **912** can be any type of identifier including an alphanumeric identifier, a numeric identifier, a globally unique identifier (GUID), or other types of identifiers. The segment ID **912** uniquely identifies the segment **824** compared to all other segments **824** in the GIS database **904**. As such, the segment ID **912** may be a long series (e.g., over ten digits) of numbers, letters, and/or other symbols that provide for a greater number of different segments **824** (e.g., 1×10^{15} identifiers) as the road structure can be broken into many segments **824**.

[0146] The latitude **916** and longitude **920** provide the location of the segment **824** identified by segment ID **912**. The latitude **916** and longitude **920** can be provided in degrees, minutes, seconds, and tenths, hundredths, etc. of seconds, that provide for the location of the segment.

[0147] The GIS information **924** can provide any information beyond just the latitude and longitude information **916**, **920**. GIS information **924** can include elevations, street names, addresses, etc. This GIS information **924** may also identify the location of the segment, but may do so, in some configurations, in a broader sense rather than the narrower or accurate latitude and longitude **916**, **920**.

[0148] Feature vectors **928** are any information used to describe the feature **852**, as described in conjunction with FIGS. **8**A-**8**H. The feature vector **928** can be a location of a feature using latitude, longitude, other GIS information, viewing angle, altitude, etc. Further, the feature vector **928** can describe what the feature looks like or where the feature **852** is located in the view as shown in FIG. **8**H. This feature vector information **928** can provide a description of angles, types of lines, and also an orientation or arrange of the feature **852** in association with other features **852** within a view **840**. Further, the feature **928** may include a pointer or other information to other features which should be in the view **840** and can include information about how those features **852** are associated therewith by distances between features **852**, angles from a set plane to another feature **852**, viewing relationships, any type of grid information for the view **840** or other information. This information allows the vehicle to match the feature vector information **928** to a view as described previously in FIGS. **8**A-**8**H. Further, the feature vector information **928** can include a previously created machine view image of the features **852** associated with the segment **824** to be visually compared by the vehicle **100**. An example of feature vector information **928** may be as shown in FIG. **9**C.

[0149] Metadata **932** can be any information related to the segment data structure **908** or the data therein. Further, metadata **932** can also include other information not described herein, but associated with other segment information or needed for the processes described herein. For example, the metadata **932** can include update information of when the feature vectors **928** were updated, the order in which the feature vectors **928** were added to the view for that segment **908**, or other information regarding the data structure **908**.

[0150] An embodiment of a feature vector data structure **928** may be as shown in FIG. **9**C. The data structure **928** may include fields for one or more of, but not limited to, a feature vector ID **980**, a latitude **916**, a longitude **920**, GIS information **928**, appearance characteristics **984**, and/or a view position **986**. There may be more or fewer fields than those shown in FIG. **9**C, as represented by ellipsis **992**. Each feature vector **928**, as described in conjunction with segment information **908**, may have a different feature vector data structure **928**, as represented by ellipsis **988**.

[0151] The feature vector ID **980** can be any type of ID including an alphanumeric ID, a numeric ID, a GUID, etc. The feature vector ID **980** may include any type of information needed to uniquely identify that feature vector **928** compared to other feature vectors **928** associated with the segment data structure **908**. Thus, the feature vector ID **980** need include many digits to identify the feature vector **928** compared to the other feature vectors **928** as there be a more constrained number of feature vectors **928** associated with each segment **908**.

[0152] The latitude **916** and longitude **920** may be the same or similar to the data provided in latitude **916** and longitude **920** in data structure **908**. The latitude **916** and longitude **920** values may be different from those given in data structure **908** (as the feature vector **852** may be in a different location), but may be of similar format or content. Similarly, the GIS information **928** may also have similar content to the GIS information **924** as described in conjunction with data structure **908** in FIG. **9**B. The GIS data **924** can be any information that provides for a location of the feature vector **928** within an environment.

[0153] The appearance characteristics **984** can be any of the characteristics as described previously, describing how a feature vector appears in the machine view. For example, feature vectors **852** can include any type of line lengths, corners, angles, etc. dealing with one or more of the feature vectors **852**. Further, the appearance characteristics **984** can provide information regarding how that feature vector **852** is associated with other feature vectors **852** within the view. For example, the angles or orientation of feature vector **852**C-**852**H, in view **840** of FIG. **8**H, may be described in appearance characteristics **984**. Appearance characteristics **984** can also include the actual HD image of the view or the feature vector **852**. As such, the feature vector information **928** can be used to identify or compare screen views **840** with information within the feature vector data structure **928** to determine similarities or likenesses.

[0154] View position **986** can be the position of any feature vector **852** within a view. For example, the view position **986** can be provided with grid coordinates for feature vectors **852** within view **840**. In other words, view **840** may be separated into X and Y coordinates along a vertical and horizontal axis, respectively, that granulate or represent positions within the view **840**. The view position **986** may be given by X and Y coordinates for some part or feature of the feature vector **852** to determine the feature vector's position within the view. In other configurations, the view position **986** can be a vector or angle and distance from a certain, predetermined point, such as a bottom left-hand corner of the view. In other configurations, there may be relationships or position determinations between the different feature vectors by angles, lines, and/or distances that provide a view position of one feature vector **852** with respect to another feature vector **852**. There may be other methods for determining the view position of feature vectors **928** within views to determine if the current view is similar to one of the feature vector data structures **928** and thus to the segment information **908**.

[0155] A method **1000** for storing information associated with a segment **824** of a route **816** may be as shown in FIG. **10**. A general order for the steps of the method **1000** is shown in FIG. **10**. Generally, the method **1000** starts with a start operation **1004** and ends with operation **1028**. The method **1000** can include more or fewer steps or can arrange the order of the steps differently than those shown in FIG. **10**. The method **1000** can be executed as a set of computer-executable instructions executed by a computer system or processor and encoded or stored on a computer readable medium. In other configurations, the method **1000** may be executed by a series of components, circuits, gates, etc. created in a hardware device, such as a System on Chip (SOC), Application Specific Integrated Circuit (ASIC), and/or a Field Programmable Gate Array (FPGA). Hereinafter, the method **1000** shall be explained with reference to the systems, components, circuits, modules, software, data structures, signaling processes, models, environments, vehicles, etc. described in conjunction with FIGS. **1**-**9**.

[0156] A location module **333** of a navigation subsystem **302** may determine the local location, in step **1008**. A location module **333** may receive information from GPS antenna receiver **331** or sensors **304** to determine a specific segment **824** or a general location **820** upon which the vehicle **100** is currently located. This location may be associated with one or more segments **824**A-**824**H, depending on the accuracy of the information received by the location module **333**. The location module can then use, for example, the process **1100**, described in FIG. **11**, to determine the exact segment **824** upon which the vehicle is located. The location module **333** may then provide information about that feature vector segment **908**. Thus, the location module **333** may generate, store, or include any of type of location information or other information into the data structure **908**. For example, the location module **333** can create the segment ID **912**, the latitude **916**, the longitude **920**, and/or the GIS information **924**. This segment information **908** describes a specific location for the segment **824** and allow the feature vector information **928** to be placed into the data structure **908**.

[0157] The location module **333** may then receive sensor information **304** to determine the feature vectors in view of the sensors **304**, in step **1012**. Here, the location module **332** can receive the view **832**. The view **832** can be from a camera **332** or from one or more of the other sensors **304**. The feature vector view **832** may be only a single machine view image of the view **832** from the sensors **304**. As such, only one view **832** may be associated with the feature vector segment **824** at which the vehicle **100** is currently located.

[0158] From the view **832**, the location module **333** and/or the processor **708** can determine, using machine vision or some other type of process, the characterizations **984**, **986** of the feature vectors **928**, in step **1016**. The processor **706** and/or location module **333** may identify the different feature vectors **852** in the view **832**. For example, the different circles **852**, as shown in FIG. **8**F, may be created that identify one or more outstanding characteristics of the view **836**. These outstanding characteristics can include such things as building corners, doorways, fire hydrants, landscaping, clocks, other architectural features, or any other type of characteristic of the surrounding environment that may be easily identified through machine vision based on the lines or configuration of that element. These different feature vectors **852** may then each have a separate data structure **928** created therefore, and thus, the processor **708** and/or the location module **333** can create the feature vector ID **980**, the latitude **916**, the longitude **920**, the GIS information **924**, etc.

[0159] Further, the location module **333** or processor **708** can also include the appearance characteristics **984** and/or the view position **986**. The characteristics **84** may be the types of lines, lengths of lines, angles between lines, or other types of information that the vehicle **100** can use to characterize the feature vector **928** for future comparison. Further, the view position **986** may be described as where those feature vectors **852** are within the view **836** either by a grid, by an angle, or some other type of information. Thus, the location module **333** or processor **708** can devolve or can change the view **832** into the view representation **836** shown in **8**G, where the feature vectors **852** are shown but nothing else. Each of these different feature vectors **852** may then be characterized by their appearance and may also then be located within the view **836**. Then the view **836** may be changed to that view **840** shown in FIG. **8**H where only the feature vectors **852** are shown and no other types of information, thus the resultant data structure **928** is compact and easier to access and to use to compare to views in the future. Further, the appearance characteristics **984** can include the actual HD image created by the above process.

[0160] The location module **333** may then store these characteristics **984** into the maps database **335** and/or the navigation source **356**, and step **1020**. In some configurations, the location module **333** may send the segment information **908** and/or feature vector information **928** through a communication interface **350** to the navigation source **356** to provide those segment characterizations **908** of the feature vectors **928** associated with the segment **824** to an external source, in step **1024**. Thus, each vehicle **100** can provide views of a certain feature vector segment **824** that may then be used to build a database for all vehicles **100**. In this way, the feature vectors **928** may be populated by the vehicles **100** driving the routes **816**, where each feature vector **928** is associated with a segment **908**, and may be updated or changed as needed as the environment around the route **816** changes to increase or eliminate certain feature vectors **852** depending on the changing environment.

[0161] An embodiment of a method **1100** for navigating using the route segments and for vehicle localization may be as shown in FIG. **11**. A general order for the steps of the method **1100** is shown in FIG. **11**. Generally, the method **1100** starts with a start operation **1104** and ends with operation **1136**. The method **1100** can include more or fewer steps or can arrange the order of the steps differently than those shown in FIG. **11**. The method **1100** can be executed as a set of computer-executable instructions executed by a computer system or processor and encoded or stored on a computer readable medium. In other configurations, the method **1100** may be executed by a series of components, circuits, gates, etc. created in a hardware device, such as a System on Chip (SOC), Application Specific Integrated Circuit (ASIC), and/or a Field Programmable Gate Array (FPGA). Hereinafter, the method **1100** shall be explained with reference to the systems, components, circuits, modules, software, data structures, signaling processes, models, environments, vehicles, etc. described in conjunction with FIGS. **1-10**.

[0162] Location module **333** can receive a primary location from a GPS antenna receiver **331** or through some other process, in step **1108**. Step **1108** may be optional as the location module **333** may not be able to receive a GPS position from GPS antenna receiver **331** due to interference from buildings, trees, or other structures around the vehicle **100** or may not be able to identify an initial position through other means. However, if the location module **333** can receive a primary location, for example, a location within area **820**, the number of feature vectors **852** or segments **824** needed to be viewed by the location module **333** is reduced.

[0163] In other circumstances, the primary location may be received or determined through dead reckoning or some other type of process, such as visual odometry and/or particle filtering. Dead reckoning and visual odometry are both processes of estimating a position based on the last known position, a route travel based on turns sensed by the location module **333**, and distance traveled based on speed of the vehicle **100** over the time of travel (which can be estimated from a speedometer or through visual odometry). From dead reckoning, the location module **333** can also minimize the number of feature vectors needed to be reviewed.

[0164] The location module **333** can then determine the feature vectors **852** that are in view of the sensors **304**, in step **1112**. In embodiments, the location module **333** can weight lower or filter out segments **824** that are not within or in physical proximity to area **820**. Those lower weighted or filtered segments **824** are then not considered by the location module **333**.

[0165] For the considered segments **824**, the location module **333** can receive from a camera sensor **332**, infrared sensor **336**, or one or more other sensors **304** a view of the surrounding environment similar to those shown in FIGS. **8**C-**8**E. These views may then be analyzed to determine if there are feature vectors **852** in the views, for example, those feature vectors represented by circles **852** in FIG. **8**F. These feature vectors **852** then may be extracted or minimized to a view similar to FIG. **8**G or **8**H. This feature vector information may then be used to compare feature vectors information sensed by the sensors **304** to those feature vectors **928** already stored in the navigation source **356** or GIS database **335**.

[0166] The location module **333** can retrieve the feature vectors information **928** already stored in the maps database **335** or navigation source **356**, in step **1116**. In some configurations, the data in navigation source **356** is updated to maps database **335** persistently or periodically. Thus, the location module **335** need not attempt to extract data from an external source but may have all GIS or location information needed in the maps database **335**. Also, the location module

333 can retrieve the one or more data structures **908** associated with segments **828** and/or **824** within the determined primary location **820**. As such, the location module **333** may not attempt to compare the feature vectors view **852**, determined in step **1112**, with every segment **824** along route **816**. However, if the filtering of the segments **824** is not completed, it may also be possible, as the vehicle **100** is traveling, that the location module **333** may process a sequence of segment views **904** through several iterations to solve for a final localization. Regardless, the location module **333** can retrieve the segment information **908** for comparison to the generated feature vectors view **852**, determined in step **1112**.

[0167] The location module **333** may then match the view feature vectors **852**, determined in step **1112**, with the retrieved feature vectors information **928** associated with the segment data structures **908**, retrieved in step **1116**. Thus, the location module **333** can do a visual comparison of feature vectors **852**, **928** both viewed and stored to see if there is a match between the feature vectors. There may be some error in the comparison as the location module **333** may not be at exactly the location of the segment **824** and thus the feature vectors **928** may be in different locations or appear slightly dissimilar to those feature vectors **852** viewed by the vehicle sensors **304**. Regardless, the location module **333** can compare several different views, retrieved in step **1116**, to the determined feature vectors view **852**, sensed in step **1112**. The closest match may then be determined.

[0168] In some instances, there may be enough segments **824** to compare that an exact match may not be possible in the allotted time before the vehicle **100** moves to a next segment **824**. In such situations, the location module **333** may determine two or more possible matches, which may put the segment **824** identified for the vehicle **100** somewhere along route **816** or at two or more specific points. At a next time, when the location module **333** attempts to find the next segment **824** where the vehicle **100** should have traveled to, the location module **333** may compare feature vectors **852** to a reduced set of segment feature vectors **928** that would be associated with the previously determined set of possible segments **824**. In this way, through two or more iterations of the comparisons, the location module **333** can rapidly determine the segment location **824** based off a process of elimination of unlikely segments **824**. Regardless, once a match is made by the location module **333**, the location module **333** can determine the location from the match, in step **1124**.

[0169] The location module **333**, once a match is made to the feature vectors **928**, based on appearance characteristics **984** and view position **986**, can determine the segment **824** associated with those feature vectors **928**, in data structure **908**. This segment **908** may then read or extract location information (e.g., latitude **916**, longitude **920**, GIS information **924**) from the data structure **908**. This location information **916-924** can then precisely locate the vehicle **100**. As such, the location module **333** then knows the exact position of the vehicle **100** based on this segment information **908**.

[0170] In some instances, there still may be an error between the segment identified **908** and the actual location of the vehicle **100**. For example, if the precise location of the vehicle **100** is not exactly on the segment **824**, there may be error within the view of the feature vectors when compared to the feature vectors information **928**. However, based on the view error and where that error is occurring or how the error is occurring, the location module **333** can still determine a precise distance from the segment location **824** to provide that precise location for the vehicle **100**. For example, if the feature vectors **852** are shifted at a certain angle and distance from the view of the feature vectors **928**, that angle and distance can be correlated into a derived error (both in distance and angle) from the segment **824**. For example, if the feature vectors **852**, in FIG. **8**F, appear shifted two pixels to the right, the view and the position of the vehicle may be from a location that is an inch to the left of segment location **825**.

[0171] Based on the determined location, from step **1124**, the location module **333** can then determine the next segment **824** based on the driving vector, in step **1128**. The driving vector may be determined from the location of previous segment(s), a route/direction of travel, a speed of travel, and/or based on other sensor information from sensors **304**, the vehicle control system **348**, and/or the GPS antenna receiver **331**. This travel vector information determines the direction of travel and the speed. Based on these two items of information, location module **333** can determine which of the next segments **824**A-**824**H may be within the vector of travel **816**. Based on this information, the vehicle **100** can iteratively return to step **1112** to compare determined feature vectors **852** from the new location **824** to retrieve feature vectors **928** associated with that next segment, in step **1128**. Thus, the method **1100** can continue iteratively during the entire period of travel for vehicle **100**. The more iterations during the route **816**, the more precise the localization is.

[0172] Various alternative embodiments and implementations are contemplated based on the methods and systems described above. For example, an alternative embodiment can use road Segment Definition (SD) maps represented by the segment data stored in the GIS information **904** described above. As described, this segment data can include information like road width, curvature, number of lanes etc., along the road networks. A traditional Monte-Carlo Localization algorithm can be used to localize the vehicle **100** along the road networks defined in these maps. According to one embodiment, the information defining road networks in the segment definition maps of the GIS information **904** can be augmented with feature descriptors which are extracted using the camera images collected during the mapping procedure. For example, the metadata **932** or other elements of the GIS information **904** data structure **908** can be extended or modified to include the feature descriptors. A Hierarchical Bag of Words (BoW) and Inverted File Indexing method can then be used for finding the closest matching visual descriptor from descriptors that are stored in the GIS information **904** and the position and orientation information weakly for the matching descriptor can be used to find the global position and orientation of the vehicle more accurately and at much faster rate. Examples of such embodiments will be described in greater detail below with reference to FIGS. **12** and **13**.

[0173] A method **1200** for storing information associated with a segment **824** of a route **816** may be as shown in FIG. **12**. A general order for the steps of the method **1200** is shown in FIG. **12**. Generally, the method **1200** starts with a start operation **1204** and ends with operation **1228**. The method **1200** can include more or fewer steps or can arrange the order of the steps differently than those shown in FIG. **12**. The method **1200** can be executed as a set of computer-

executable instructions executed by a computer system or processor and encoded or stored on a computer readable medium. In other configurations, the method **1200** may be executed by a series of components, circuits, gates, etc. created in a hardware device, such as a System on Chip (SOC), Application Specific Integrated Circuit (ASIC), and/or a Field Programmable Gate Array (FPGA). Hereinafter, the method **1200** shall be explained with reference to the systems, components, circuits, modules, software, data structures, signaling processes, models, environments, vehicles, etc. described in conjunction with FIGS. **1-9**.

[0174] Similar to the process described above with reference to FIG. **10**, a location module **333** of a navigation subsystem **302** may determine the local location, in step **1208**. A location module **333** may receive information from GPS antenna receiver **331** or sensors **304** to determine a specific segment **824** or a general location **820** upon which the vehicle **100** is currently located. This location may be associated with one or more segments **824**A-**824**H, depending on the accuracy of the information received by the location module **333**. The location module can then use, for example, the process **1300**, described in FIG. **13**, to determine the exact segment **824** upon which the vehicle is located. The location module **333** may then provide information about that feature vector segment **908**. Thus, the location module **333** may generate, store, or include any of type of location information or other information into the data structure **908**. For example, the location module **333** can create the segment ID **912**, the latitude **916**, the longitude **920**, and/or the GIS information **924**. This segment information **908** describes a specific location for the segment **824** and allow the feature vector information **928** to be placed into the data structure **908**.

[0175] The location module **333** may then receive sensor information **304** to determine the feature vectors in view of the sensors **304**, in step **1212**. Here, the location module **332** can receive the view **832**. The view **832** can be from a camera **332** or from one or more of the other sensors **304**. The feature vector view **832** may be only a single machine view image of the view **832** from the sensors **304**. As such, only one view **832** may be associated with the feature vector segment **824** at which the vehicle **100** is currently located.

[0176] From the view **832**, the location module **333** and/or the processor **708** can determine, using machine vision or some other type of process, the characterizations **984**, **986** of the feature vectors **928**, in step **1216**. The processor **706** and/or location module **333** may identify the different feature vectors **852** in the view **832**. For example, the different circles **852**, as shown in FIG. **8**F, may be created that identify one or more outstanding characteristics of the view **836**. These outstanding characteristics can include such things as building corners, doorways, fire hydrants, landscaping, clocks, other architectural features, or any other type of characteristic of the surrounding environment that may be easily identified through machine vision based on the lines or configuration of that element. These different feature vectors **852** may then each have a separate data structure **928** created therefore, and thus, the processor **708** and/or the location module **333** can create the feature vector ID **980**, the latitude **916**, the longitude **920**, the GIS information **924**, etc.

[0177] Further, the location module **333** or processor **708** can also include the appearance characteristics **984** and/or the view position **986**. The characteristics **84** may be the types of lines, lengths of lines, angles between lines, or other types of information that the vehicle **100** can use to characterize the feature vector **928** for future comparison. Further, the view position **986** may be described as where those feature vectors **852** are within the view **836** either by a grid, by an angle, or some other type of information. Thus, the location module **333** or processor **708** can devolve or can change the view **832** into the view representation **836** shown in **8**G, where the feature vectors **852** are shown but nothing else. Each of these different feature vectors **852** may then be characterized by their appearance and may also then be located within the view **836**. Then the view **836** may be changed to that view **840** shown in FIG. **8**H where only the feature vectors **852** are shown and no other types of information, thus the resultant data structure **928** is compact and easier to access and to use to compare to views in the future. Further, the appearance characteristics **984** can include the actual HD image created by the above process.

[0178] The location module **333** may also extract descriptors from images that are collected during the mapping procedure at step **1221**. For example, Oriented-Rotational Brief (ORB) descriptors may be extracted. ORB-descriptors build on the Features from Accelerated Segment Test (FAST) algorithm keypoint detector and the Binary Robust Independent Elementary Features (BRIEF) descriptor. ORB is basically a fusion of the FAST keypoint detector algorithm and BRIEF descriptors with many modifications to enhance the performance. It employs the FAST algorithm to find keypoints followed by the application of the Harris corner measure to find a set of top N points among them. It can use pyramid to produce multiscale-features. Because the FAST algorithm fails to compute the orientation, ORB descriptors are based on the intensity weighted centroid of the patch with a located corner at center. The vector direction from this corner point to the centroid yields the orientation. To improve the rotation invariance, moments are computed with x and y which should be in a circular region of radius r, where r is the size of the patch. ORB uses BRIEF descriptors. ORB "steers" BRIEF according to the orientation of keypoints. For any feature set of n binary tests at location (x_i, y_i), defines a 2×n matrix, S which contains the coordinates of these pixels. Then using the orientation of patch, θ, its rotation matrix is found and rotates the S to get steered(rotated) version S_θ. ORB discretizes the angle to increments of $2\pi/30$ (12 degrees), and constructs a lookup table of precomputed BRIEF patterns. As long as the keypoint orientation θ is consistent across views, the correct set of points S_θ will be used to compute its descriptor. In BRIEF, each bit feature has a large variance and a mean near 0.5. But once it is oriented along a keypoint direction, it loses this property and becomes more distributed. ORB runs a greedy search among all possible binary tests to find the ones that have both high variance and means close to 0.5, as well as being uncorrelated. The result is called rBRIEF. For descriptor matching, multi-probe Locality Sensitive Hashing (LSH) which improves on the traditional LSH, is used.

[0179] Once the GIS information **904** has been moved from the image space to the descriptor space, a vocabulary of visual words that appears in all the images that are collected can be created using a Hierarchical Bag of Words (BoW). BoW refers to an algorithm used for image classification, by treating image features as words. In computer vision, a bag of visual words is a vector of occurrence counts of a vocabulary of local image features. To represent an

image using the BoW model, an image can be treated as a document. Similarly, "words" in images are defined. To achieve this, it usually includes following three steps: feature detection, feature description, and codebook generation. A definition of the BoW model can be the "histogram representation based on independent features." Content based image indexing and retrieval (CBIR) appears to be the early adopter of this image representation technique. After feature detection, each image is abstracted by several local patches. Feature representation methods deal with how to represent the patches as numerical vectors. These vectors are called feature descriptors. A good descriptor should have the ability to handle intensity, rotation, scale and affine variations to some extent. One of the most famous descriptors is Scale-Invariant Feature Transformation (SIFT). SIFT converts each patch to a 128-dimensional vector. After this step, each image is a collection of vectors of the same dimension (128 for SIFT), where the order of different vectors is of no importance. The final step for the BoW model is to convert vector-represented patches to "codewords" (analogous to words in text documents), which also produces a "codebook" (analogy to a word dictionary). A codeword can be considered as a representative of several similar patches. One simple method is performing k-means clustering over all the vectors. Codewords are then defined as the centers of the learned clusters. The number of the clusters is the codebook size (analogous to the size of the word dictionary). Thus, each patch in an image is mapped to a certain codeword through the clustering process and the image can be represented by the histogram of the codewords. A number of learning and recognition methods have been developed based on the BoW model. Generative models, such as Naïve Bayes classifier and hierarchical Bayesian models, and discriminative models, such as pyramid match kernel are examples.

[0180] K-means clustering refers to a method of vector quantization, originally from signal processing, that is popular for cluster analysis in data mining. k-means clustering aims to partition n observations into k clusters in which each observation belongs to the cluster with the nearest mean, serving as a prototype of the cluster. This results in a partitioning of the data space into Voronoi cells. The problem can be computationally difficult (NP-hard). However, there are efficient heuristic algorithms that are commonly employed and converge quickly to a local optimum. These are usually similar to the expectation-maximization algorithm for mixtures of Gaussian distributions via an iterative refinement approach employed by both algorithms. Additionally, they both use cluster centers to model the data. However, k-means clustering tends to find clusters of comparable spatial extent, while the expectation-maximization mechanism allows clusters to have different shapes. The algorithm has a loose relationship to the k-nearest neighbor classifier, a popular machine-learning technique for classification that is often confused with k-means because of the k in the name. One can apply the l-nearest neighbor classifier on the cluster centers obtained by k-means to classify new data into the existing clusters. This is known as nearest centroid classifier or the Rocchio algorithm. The most common algorithm uses an iterative refinement technique, which is often called the k-means algorithm. It is also referred to as Lloyd's algorithm, particularly in the computer science community.

[0181] The main purpose of creating a set of vocabulary from images, is that it helps to represent any image using s set of words, where s e k reduces the complexity and memory footprints. After creating the vocabulary, a database can be created, e.g., GIS information **904**, having visual words extracted from images collected during the mapping procedure and their corresponding position and orientation which are obtained using RTK-GPS, i.e., the road segment definition map of the GIS information **904** described above is augmented with the generated vocabulary, e.g., stored in the metadata **932** or elsewhere. To localize the vehicle, the Inverted File Indexing method can be utilized for fast retrieval of pose corresponding to the image that the vehicle sees.

[0182] The Inverted File Indexing method refers to an index data structure storing a mapping from content, such as words or numbers, to its locations in a database file, or in a document or a set of documents (named in contrast to a forward index, which maps from documents to content). The purpose of an inverted index is to allow fast object searches at a cost of increased processing when an object is added to the database. The inverted file may be the database file itself, rather than its index. There are two main variants of inverted indexes. A record-level inverted index or inverted file index or just inverted file contains a list of references to objects for each word. A word-level inverted index or full inverted index or inverted list additionally contains the positions of each word within an object. This method accelerates the retrieval of the closest matching position and orientation of the vehicle. If not, the current view is matched with each information in the database. The inverted file indexing method can be thought of as an index page in the back of a book. Instead of a word pointing to a page number, the index points to a set of visual words to corresponding images.

[0183] In some configurations, the location module **333** may send the segment information **908**, feature vector information **928** and/or descriptor vocabulary through a communication interface **350** to the navigation source **356** to provide those segment characterizations **908** of the feature vectors **928** associated with the segment **824** to an external source, in step **1224**. Thus, each vehicle **100** can provide views of a certain feature vector segment **824** that may then be used to build a database for all vehicles **100**. In this way, the feature vectors **928** and/or descriptor vocabulary may be populated by the vehicles **100** driving the routes **816**, where each feature vector **928** and/or descriptor vocabulary are associated with a segment **908**, and may be updated or changed as needed as the environment around the route **816** changes to increase or eliminate certain feature vectors **852** depending on the changing environment.

[0184] An embodiment of a method **1300** for navigating using the route segments and for vehicle localization may be as shown in FIG. **13**. A general order for the steps of the method **1300** is shown in FIG. **13**. Generally, the method **1300** starts with a start operation **1304** and ends with operation **1336**. The method **1300** can include more or fewer steps or can arrange the order of the steps differently than those shown in FIG. **13**. The method **1300** can be executed as a set of computer-executable instructions executed by a computer system or processor and encoded or stored on a computer readable medium. In other configurations, the method **1300** may be executed by a series of components, circuits, gates, etc. created in a hardware device, such as a System on Chip (SOC), Application Specific Integrated

Circuit (ASIC), and/or a Field Programmable Gate Array (FPGA). Hereinafter, the method **1300** shall be explained with reference to the systems, components, circuits, modules, software, data structures, signaling processes, models, environments, vehicles, etc. described in conjunction with FIGS. **1-12**.

[0185] Similar to the process described above with reference to FIG. **11**, location module **333** can receive a primary location from a GPS antenna receiver **331** or through some other process, in step **1308**. Step **1308** may be optional as the location module **333** may not be able to receive a GPS position from GPS antenna receiver **331** due to interference from buildings, trees, or other structures around the vehicle **100** or may not be able to identify an initial position through other means. However, if the location module **333** can receive a primary location, for example, a location within area **820**, the number of feature vectors **852** or segments **824** needed to be viewed by the location module **333** is reduced.

[0186] In other circumstances, the primary location may be received or determined through dead reckoning or some other type of process, such as visual odometry and/or particle filtering. Dead reckoning and visual odometry are both processes of estimating a position based on the last known position, a route travel based on turns sensed by the location module **333**, and distance traveled based on speed of the vehicle **100** over the time of travel (which can be estimated from a speedometer or through visual odometry). From dead reckoning, the location module **333** can also minimize the number of feature vectors needed to be reviewed.

[0187] The location module **333** can then determine the feature vectors **852** that are in view of the sensors **304**, in step **1312**. In embodiments, the location module **333** can weight lower or filter out segments **824** that are not within or in physical proximity to area **820**. Those lower weighted or filtered segments **824** are then not considered by the location module **333**.

[0188] For the considered segments **824**, the location module **333** can receive from a camera sensor **332**, infrared sensor **336**, or one or more other sensors **304** a view of the surrounding environment similar to those shown in FIGS. **8**C-**8**E. These views may then be analyzed to determine if there are feature vectors **852** in the views, for example, those feature vectors represented by circles **852** in FIG. **8**F. These feature vectors **852** then may be extracted or minimized to a view similar to FIG. **8**G or **8**H. This feature vector information may then be used to compare feature vectors information sensed by the sensors **304** to those feature vectors **928** already stored in the navigation source **356** or GIS database **335**.

[0189] The location module **333** can retrieve the feature vectors information **928** already stored in the maps database **335** or navigation source **356**, in step **1316**. The map itself is a set of linearly spaced points. According to one embodiment, the slope between each set of points can be calculated and interpolated between them to create closely spaced points such that a segment map point can be found in every half-a-meter. This is done for finding distance between a particle and its closest map point in an efficient way using KD-trees as will be described in greater detail below.

[0190] To solve the problem of localization, particle filters can be applied at step **1320**. The output of the particle filter algorithm can be a probability distribution over the pose x_t of the vehicle. Typically, the particle filter algorithm has a motion update step, weight update step and resampling step. The algorithm has a set of particles P. Each particle can have the states $\{x_i, y_i\ \theta_1, w_i, d_i\}$ where x_1, y_i represents the position of the ith particle θ_i orientation of the ith particle. w_i and d_i represents the weight assigned and distance from the closest map point of the ith particle.

[0191] Each of the particle by themselves represent a possible location for the vehicle. When the vehicle moves from one position to another position in the real world, each of the particles should move from its current position and orientation similar to the actual movement of the vehicle. The motion update step can be generally represented by $p(X_t/U_t, X_{t-1}, M)$, Here X_t and X_{t-1} represent the pose of the vehicle at time t and t−1, U_t represents the control input given to the vehicle and M represents the road segment definition map. Let x_t, y_t, θ_t be the pose of the vehicle at time t and x_{t-1}, y_{t-1}, θ_{t-1} be pose of the pose of the vehicle at time t−1. The following equations are used to update the pose of the particle as the vehicle moves in the world:

$$\delta_{trans}=\sqrt{(x_t-x_{t-1})+(y_t-y_{t-1})}$$

$$\delta_{rot1}=\alpha \tan 2((y_t-y_{t-1}),(x_t-x_{t-1}))$$

$$\delta_{rot2}=\theta t-\theta_t-\delta_{rot1}$$

$$x_t=x_{t-1}+\cos(\theta_{t-1}+\delta_{rot1})+\mathcal{N}(0,\sigma_x^2)$$

$$y_t=y_{t-1}+\sin(\theta_{t-1}++\delta_{rot1})+\mathcal{N}(0,\sigma_y^2)$$

$$\theta_t=\theta_{t-1}+\delta_{rot1}+\mathcal{N}(0,\sigma_\theta^2)$$

[0192] Here $\mathcal{N}(0,\sigma_x^2)$, $\mathcal{N}(0,\sigma_y^2)$, $\mathcal{N}(0,\sigma_\theta^2)$ represents the gaussian noise added to each state of the particle with mean zero and standard deviation of σ_x, σ_y, σ_θ correspondingly. To get the position and orientation of the vehicle at the next time step, a visual odometry system fused with IMU can be used. This fusion gives the relative transformation from time t−1 to t. Since the particle filter framework has a probabilistic transition model, the drift accumulated due to incremental pose estimation can be eliminated.

[0193] As the pose of the particles are propagated similar to the vehicle motion, a weight can be assigned to each of the particles. Each particle can be assigned a weight $w_i=p(Z_t/X_t,M)$ where w_i is the weight of ith particle and Z_t represents the observations received at time t. The distance of the particle from the closest segment point can be used for weighting the particles. Assuming that the vehicle moves only along the road network segments, the closest map point to the current particle can be found and a weight can be assigned to it based on the following equation:

$$w_i=\frac{1}{\sqrt{2\pi\sigma_d^2}}e^{-d_i^2/2\sigma_d^2}$$

[0194] Here, σ_d is the standard deviation distance metric and d_i is distance of the particle from the closest map point. This intuitively means that, as a particle moves away from the segment map, the distance of the particle to the closest map point is going to increase because of which it will be assigned a lower weight. Only the particles which travel along the segments will be assigned with higher weights.

[0195] Since the number of map points between two segment points have been augmented, the closest map point to the current particle pose can be found using a KD-tree.

KD-Trees refers to a space-partitioning data structure for organizing points in a k-dimensional space. KD trees are a useful data structure for several applications, such as searches involving a multidimensional search key (e.g., range searches and nearest neighbor searches). KD trees are a special case of binary space partitioning trees. The nearest neighbor search (NN) algorithm aims to find the point in the tree that is nearest to a given input point. This search can be done efficiently by using the tree properties to quickly eliminate large portions of the search space. Searching for a nearest neighbor in a KD tree includes the steps: starting with the root node, the algorithm moves down the tree recursively (i.e., it goes left or right depending on whether the point is lesser than or greater than the current node in the split dimension); when the algorithm reaches a leaf node, it saves that node point as the "current best"; the algorithm unwinds the recursion of the tree, performing the following steps at each node: when the current node is closer than the current best, then it becomes the current best, the algorithm checks whether there could be any points on the other side of the splitting plane that are closer to the search point than the current best. In concept, this is done by intersecting the splitting hyperplane with a hypersphere around the search point that has a radius equal to the current nearest distance. Since the hyperplanes are all axis-aligned this is implemented as a simple comparison to see whether the distance between the splitting coordinate of the search point and current node is lesser than the distance (overall coordinates) from the search point to the current best, when the hypersphere crosses the plane, there could be nearer points on the other side of the plane, so the algorithm must move down the other branch of the tree from the current node looking for closer points, following the same recursive process as the entire search, and when the hypersphere doesn't intersect the splitting plane, then the algorithm continues walking up the tree, and the entire branch on the other side of that node is eliminated; and when the algorithm finishes this process for the root node, then the search is complete. Generally, the algorithm uses squared distances for comparison to avoid computing square roots. Additionally, it can save computation by holding the squared current best distance in a variable for comparison. The KD-tree is useful to retrieve the closest map point to the current particle position in O(log n) where n is the number of map points in the tree. The shortest distance between a point and line equation can also be used to find the distance between a particle and the closest segment, but this distance should be calculated with respect to each of the segments in the map and this would be very inefficient.

[0196] With the closest matching position and orientation in hand, the particles which are within a certain region from that position can be found. These particles can be weighted according to the following:

$$w_i = \begin{cases} w_i + \frac{1}{\sqrt{2\pi\sigma_i^2}} e^{-l_i^2/2\sigma_i^2}, \text{ if } l_i < 5.0\ m \\ 0, \text{ otherwise} \end{cases}$$

[0197] Here, I_i indicates the distance between the ith particle and the retrieved image pose from the database, σ_i is standard deviation. In this way, the weights for all the particles that are close to the matched position and orientation are increased. According to one embodiment, particle filtering can further comprise a resampling step. By resampling, bad particles can be eliminated and only the good particles can propagate through the environment. A stochastic universal resampling method can be used to resample all particles and it has a complexity of 0(log n). Thus, a true location and pose of the vehicle can be determined at step **1324** in a very short period of time.

[0198] Based on the determined location, from step **1324**, the location module **333** can then determine the next segment **824** based on the driving vector, in step **1328**. The driving vector may be determined from the location of previous segment(s), a route/direction of travel, a speed of travel, and/or based on other sensor information from sensors **304**, the vehicle control system **348**, and/or the GPS antenna receiver **331**. This travel vector information determines the direction of travel and the speed. Based on these two items of information, location module **333** can determine which of the next segments **824**A-**824**H may be within the vector of travel **816**. Based on this information, the vehicle **100** can iteratively return to step **1312** to compare determined feature vectors **852** from the new location **824** to retrieve feature vectors **928** associated with that next segment, in step **1328**. Thus, the method **1300** can continue iteratively during the entire period of travel for vehicle **100**. The more iterations during the route **816**, the more precise the localization is.

[0199] Through this process **1300**, the location module **333** can get a very exact location, possibly down to inches or millimeters. This exact location allows for automated driving that is much safer and is in less need of constant sensor input to determine the location of the vehicle **100**. Rather than just looking for objects to avoid around the vehicle **100** or simply trying to maintain a certain spacing between sensed objects, the vehicle **100** can know an exact location, be able to maintain the vehicle's position on a roadway using this localization, and then enhance the performance of the vehicle in an autonomous mode by complementing the sensed position with the exact localization. Further, turns and other types of maneuvers may be more exact as the localization can also complement the driving system's use of sensors in the environment to derive an exact position and then pair this exact position with the current sensed position of the car in the environment. Thus, the vehicle's autonomous driving capabilities are greatly enhanced with the exact localization described herein.

[0200] The exemplary systems and methods of this disclosure have been described in relation to vehicle systems and electric vehicles. However, to avoid unnecessarily obscuring the present disclosure, the preceding description omits a number of known structures and devices. This omission is not to be construed as a limitation of the scope of the claimed disclosure. Specific details are set forth to provide an understanding of the present disclosure. It should, however, be appreciated that the present disclosure may be practiced in a variety of ways beyond the specific detail set forth herein.

[0201] Furthermore, while the exemplary embodiments illustrated herein show the various components of the system collocated, certain components of the system can be located remotely, at distant portions of a distributed network, such as a LAN and/or the Internet, or within a dedicated system. Thus, it should be appreciated, that the components of the system can be combined into one or more devices,

such as a server, communication device, or collocated on a feature vector node of a distributed network, such as an analog and/or digital telecommunications network, a packet-switched network, or a circuit-switched network. It will be appreciated from the preceding description, and for reasons of computational efficiency, that the components of the system can be arranged at any location within a distributed network of components without affecting the operation of the system.

[0202] Furthermore, it should be appreciated that the various links connecting the elements can be wired or wireless links, or any combination thereof, or any other known or later developed element(s) that is capable of supplying and/or communicating data to and from the connected elements. These wired or wireless links can also be secure links and may be capable of communicating encrypted information. Transmission media used as links, for example, can be any suitable carrier for electrical signals, including coaxial cables, copper wire, and fiber optics, and may take the form of acoustic or light waves, such as those generated during radio-wave and infra-red data communications.

[0203] While the flowcharts have been discussed and illustrated in relation to a feature vector sequence of events, it should be appreciated that changes, additions, and omissions to this sequence can occur without materially affecting the operation of the disclosed embodiments, configuration, and aspects.

[0204] A number of variations and modifications of the disclosure can be used. It would be possible to provide for some features of the disclosure without providing others.

[0205] In yet another embodiment, the systems and methods of this disclosure can be implemented in conjunction with a special purpose computer, a programmed microprocessor or microcontroller and peripheral integrated circuit element(s), an ASIC or other integrated circuit, a digital signal processor, a hard-wired electronic or logic circuit such as discrete element circuit, a programmable logic device or gate array such as PLD, PLA, FPGA, PAL, special purpose computer, any comparable means, or the like. In general, any device(s) or means capable of implementing the methodology illustrated herein can be used to implement the various aspects of this disclosure. Exemplary hardware that can be used for the present disclosure includes computers, handheld devices, telephones (e.g., cellular, Internet enabled, digital, analog, hybrids, and others), and other hardware known in the art. Some of these devices include processors (e.g., a single or multiple microprocessors), memory, nonvolatile storage, input devices, and output devices. Furthermore, alternative software implementations including, but not limited to, distributed processing or component/object distributed processing, parallel processing, or virtual machine processing can also be constructed to implement the methods described herein.

[0206] In yet another embodiment, the disclosed methods may be readily implemented in conjunction with software using object or object-oriented software development environments that provide portable source code that can be used on a variety of computer or workstation platforms. Alternatively, the disclosed system may be implemented partially or fully in hardware using standard logic circuits or VLSI design. Whether software or hardware is used to implement the systems in accordance with this disclosure is dependent on the speed and/or efficiency requirements of the system, the feature vector function, and the feature vector software or hardware systems or microprocessor or microcomputer systems being utilized.

[0207] In yet another embodiment, the disclosed methods may be partially implemented in software that can be stored on a storage medium, executed on programmed general-purpose computer with the cooperation of a controller and memory, a special purpose computer, a microprocessor, or the like. In these instances, the systems and methods of this disclosure can be implemented as a program embedded on a personal computer such as an applet, JAVA® or CGI script, as a resource residing on a server or computer workstation, as a routine embedded in a dedicated measurement system, system component, or the like. The system can also be implemented by physically incorporating the system and/or method into a software and/or hardware system.

[0208] Although the present disclosure describes components and functions implemented in the embodiments with reference to feature vector standards and protocols, the disclosure is not limited to such standards and protocols. Other similar standards and protocols not mentioned herein are in existence and are considered to be included in the present disclosure. Moreover, the standards and protocols mentioned herein and other similar standards and protocols not mentioned herein are periodically superseded by faster or more effective equivalents having essentially the same functions. Such replacement standards and protocols having the same functions are considered equivalents included in the present disclosure.

[0209] The present disclosure, in various embodiments, configurations, and aspects, includes components, methods, processes, systems and/or apparatus substantially as depicted and described herein, including various embodiments, sub-combinations, and subsets thereof. Those of skill in the art will understand how to make and use the systems and methods disclosed herein after understanding the present disclosure. The present disclosure, in various embodiments, configurations, and aspects, includes providing devices and processes in the absence of items not depicted and/or described herein or in various embodiments, configurations, or aspects hereof, including in the absence of such items as may have been used in previous devices or processes, e.g., for improving performance, achieving ease, and/or reducing cost of implementation.

[0210] The foregoing discussion of the disclosure has been presented for purposes of illustration and description. The foregoing is not intended to limit the disclosure to the form or forms disclosed herein. In the foregoing Detailed Description for example, various features of the disclosure are grouped together in one or more embodiments, configurations, or aspects for the purpose of streamlining the disclosure. The features of the embodiments, configurations, or aspects of the disclosure may be combined in alternate embodiments, configurations, or aspects other than those discussed above. This method of disclosure is not to be interpreted as reflecting an intention that the claimed disclosure requires more features than are expressly recited in each claim. Rather, as the following claims reflect, inventive aspects lie in less than all features of a single foregoing disclosed embodiment, configuration, or aspect. Thus, the following claims are hereby incorporated into this Detailed Description, with each claim standing on its own as a separate preferred embodiment of the disclosure.

[0211] Moreover, though the description of the disclosure has included description of one or more embodiments, configurations, or aspects and certain variations and modifications, other variations, combinations, and modifications are within the scope of the disclosure, e.g., as may be within the skill and knowledge of those in the art, after understanding the present disclosure. It is intended to obtain rights, which include alternative embodiments, configurations, or aspects to the extent permitted, including alternate, interchangeable and/or equivalent structures, functions, ranges, or steps to those claimed, whether or not such alternate, interchangeable and/or equivalent structures, functions, ranges, or steps are disclosed herein, and without intending to publicly dedicate any patentable subject matter.

[0212] Embodiments include an autonomous vehicle control system, comprising: a sensor, the sensor sensing an environment surrounding a vehicle associated with the vehicle control system, wherein a feature vector describes at least a portion of the environment at a current location of the vehicle on a route; a processor communicatively coupled with the sensor, a memory communicatively coupled with and readable by the processor and storing therein a set of instructions which, when executed by the processor, causes the processor to determine the current location of the vehicle on the route by: receiving information from the sensor regarding the feature vector; retrieving feature vector particle information associated with two or more segments of a route of travel for the vehicle, wherein the feature vector particle information comprises a vocabulary of visual descriptors; applying particle filtering to the received information from the sensor regarding the feature vector and the retrieved feature vector particle information associated with two or more segments of a route of travel for the vehicle; and determining the current location of the vehicle on the route based on the applied particle filtering.

[0213] Aspects of the above autonomous vehicle control system include wherein the vocabulary of visual descriptors is based on Oriented-Rotational Brief (ORB) descriptors for the feature vector particle information associated with the two or more segments.

[0214] Aspects of the above autonomous vehicle control system include wherein the vocabulary of visual descriptors is derived from the ORB descriptors using a Hierarchical Bag of Words (BoW).

[0215] Aspects of the above autonomous vehicle control system include wherein the feature vector particle information is retrieved using an Inverted File Index method.

[0216] Aspects of the above autonomous vehicle control system include wherein applying particle filtering to the received information from the sensor regarding the feature vector and the retrieved feature vector particle information associated with two or more segments of a route of travel for the vehicle comprises applying a Monte Carlo localization algorithm to the retrieved feature vector particle information associated with two or more segments of a route of travel for the vehicle to select a set of local particles, updating the selected set of local particles based on motion of the vehicle, and weighting the updated set of local particles based on a distance of each particle in the updated set of local particles to a closest segment point and further based on an image descriptor in the visual vocabulary or each particle.

[0217] Aspects of the above autonomous vehicle control system include wherein applying particle filtering to the received information from the sensor regarding the feature vector and the retrieved feature vector particle information associated with two or more segments of a route of travel for the vehicle further comprises determining the distance of each particle in the updated set of local particles to the closest segment point using a KD tree.

[0218] Aspects of the above autonomous vehicle control system include wherein applying particle filtering to the received information from the sensor regarding the feature vector and the retrieved feature vector particle information associated with two or more segments of a route of travel for the vehicle further comprises applying stochastic universal resampling to the updated set of local particles.

[0219] Embodiments include a method for determining a current location of a vehicle on a route, the method comprising: receiving, by a control system of the vehicle, information from the sensor regarding the feature vector; retrieving, by the control system of the vehicle, feature vector particle information associated with two or more segments of a route of travel for the vehicle, wherein the feature vector particle information comprises a vocabulary of visual descriptors; applying, by the control system of the vehicle, particle filtering to the received information from the sensor regarding the feature vector and the retrieved feature vector particle information associated with two or more segments of a route of travel for the vehicle; and determining, by the control system of the vehicle, the current location of the vehicle on the route based on the applied particle filtering.

[0220] Aspects of the above method include wherein the vocabulary of visual descriptors is based on Oriented-Rotational Brief (ORB) descriptors for the feature vector particle information associated with the two or more segments.

[0221] Aspects of the above method include wherein the vocabulary of visual descriptors is derived from the ORB descriptors using a Hierarchical Bag of Words (BoW).

[0222] Aspects of the above method include wherein the feature vector particle information is retrieved using an Inverted File Index method.

[0223] Aspects of the above method include wherein applying particle filtering to the received information from the sensor regarding the feature vector and the retrieved feature vector particle information associated with two or more segments of a route of travel for the vehicle comprises applying a Monte Carlo localization algorithm to the retrieved feature vector particle information associated with two or more segments of a route of travel for the vehicle to select a set of local particles, updating the selected set of local particles based on motion of the vehicle, and weighting the updated set of local particles based on a distance of each particle in the updated set of local particles to a closest segment point and further based on an image descriptor in the visual vocabulary or each particle.

[0224] Aspects of the above method include wherein applying particle filtering to the received information from the sensor regarding the feature vector and the retrieved feature vector particle information associated with two or more segments of a route of travel for the vehicle further comprises determining the distance of each particle in the updated set of local particles to the closest segment point using a KD tree.

[0225] Aspects of the above method include wherein applying particle filtering to the received information from the sensor regarding the feature vector and the retrieved

feature vector particle information associated with two or more segments of a route of travel for the vehicle further comprises applying stochastic universal resampling to the updated set of local particles.

[0226] Embodiments include a non-transitory, computer-readable medium comprising a set of instructions stored therein which, when executed by a processor, causes the processor to determine a current location of a vehicle on a route by: receiving information from the sensor regarding the feature vector; retrieving feature vector particle information associated with two or more segments of a route of travel for the vehicle, wherein the feature vector particle information comprises a vocabulary of visual descriptors; applying particle filtering to the received information from the sensor regarding the feature vector and the retrieved feature vector particle information associated with two or more segments of a route of travel for the vehicle; and determining the current location of the vehicle on the route based on the applied particle filtering.

[0227] Aspects of the above non-transitory, computer-readable medium include wherein the vocabulary of visual descriptors is based on Oriented-Rotational Brief (ORB) descriptors for the feature vector particle information associated with the two or more segments and wherein the vocabulary of visual descriptors is derived from the ORB descriptors using a Hierarchical Bag of Words (BoW).

[0228] Aspects of the above non-transitory, computer-readable medium include wherein the feature vector particle information is retrieved using an Inverted File Index method.

[0229] Aspects of the above non-transitory, computer-readable medium include wherein applying particle filtering to the received information from the sensor regarding the feature vector and the retrieved feature vector particle information associated with two or more segments of a route of travel for the vehicle comprises applying a Monte Carlo localization algorithm to the retrieved feature vector particle information associated with two or more segments of a route of travel for the vehicle to select a set of local particles, updating the selected set of local particles based on motion of the vehicle, and weighting the updated set of local particles based on a distance of each particle in the updated set of local particles to a closest segment point and further based on an image descriptor in the visual vocabulary or each particle.

[0230] Aspects of the above non-transitory, computer-readable medium include wherein applying particle filtering to the received information from the sensor regarding the feature vector and the retrieved feature vector particle information associated with two or more segments of a route of travel for the vehicle further comprises determining the distance of each particle in the updated set of local particles to the closest segment point using a KD tree.

[0231] Aspects of the above non-transitory, computer-readable medium include wherein applying particle filtering to the received information from the sensor regarding the feature vector and the retrieved feature vector particle information associated with two or more segments of a route of travel for the vehicle further comprises applying stochastic universal resampling to the updated set of local particles.

[0232] Any one or more of the aspects/embodiments as substantially disclosed herein.

[0233] Any one or more of the aspects/embodiments as substantially disclosed herein optionally in combination with any one or more other aspects/embodiments as substantially disclosed herein.

[0234] One or more means adapted to perform any one or more of the above aspects/embodiments as substantially disclosed herein.

[0235] The phrases "at least one," "one or more," "or," and "and/or" are open-ended expressions that are both conjunctive and disjunctive in operation. For example, each of the expressions "at least one of A, B and C," "at least one of A, B, or C," "one or more of A, B, and C," "one or more of A, B, or C," "A, B, and/or C," and "A, B, or C" means A alone, B alone, C alone, A and B together, A and C together, B and C together, or A, B and C together.

[0236] The term "a" or "an" entity refers to one or more of that entity. As such, the terms "a" (or "an"), "one or more," and "at least one" can be used interchangeably herein. It is also to be noted that the terms "comprising," "including," and "having" can be used interchangeably.

[0237] The term "automatic" and variations thereof, as used herein, refers to any process or operation, which is typically continuous or semi-continuous, done without material human input when the process or operation is performed. However, a process or operation can be automatic, even though performance of the process or operation uses material or immaterial human input, if the input is received before performance of the process or operation. Human input is deemed to be material if such input influences how the process or operation will be performed. Human input that consents to the performance of the process or operation is not deemed to be "material."

[0238] Aspects of the present disclosure may take the form of an embodiment that is entirely hardware, an embodiment that is entirely software (including firmware, resident software, micro-code, etc.) or an embodiment combining software and hardware aspects that may all generally be referred to herein as a "circuit," "module," or "system." Any combination of one or more computer-readable medium(s) may be utilized. The computer-readable medium may be a computer-readable signal medium or a computer-readable storage medium.

[0239] A computer-readable storage medium may be, for example, but not limited to, an electronic, magnetic, optical, electromagnetic, infrared, or semiconductor system, apparatus, or device, or any suitable combination of the foregoing. More specific examples (a non-exhaustive list) of the computer-readable storage medium would include the following: an electrical connection having one or more wires, a portable computer diskette, a hard disk, a Random-Access Memory (RAM), a Read-Only Memory (ROM), an Erasable Programmable Read-Only Memory (EPROM or Flash memory), an optical fiber, a portable Compact Disc Read-Only Memory (CD-ROM), an optical storage device, a magnetic storage device, or any suitable combination of the foregoing. In the context of this document, a computer-readable storage medium may be any tangible medium that can contain or store a program for use by or in connection with an instruction execution system, apparatus, or device.

[0240] A computer-readable signal medium may include a propagated data signal with computer-readable program code embodied therein, for example, in baseband or as part of a carrier wave. Such a propagated signal may take any of a variety of forms, including, but not limited to, electro-

magnetic, optical, or any suitable combination thereof. A computer-readable signal medium may be any computer-readable medium that is not a computer-readable storage medium and that can communicate, propagate, or transport a program for use by or in connection with an instruction execution system, apparatus, or device. Program code embodied on a computer-readable medium may be transmitted using any appropriate medium, including, but not limited to, wireless, wireline, optical fiber cable, RF, etc., or any suitable combination of the foregoing.

[0241] The terms "determine," "calculate," "compute," and variations thereof, as used herein, are used interchangeably and include any type of methodology, process, mathematical operation or technique.

[0242] The term "Electric Vehicle" (EV), also referred to herein as an electric drive vehicle, may use one or more electric motors or traction motors for propulsion. An electric vehicle may be powered through a collector system by electricity from off-vehicle sources, or may be self-contained with a battery or generator to convert fuel to electricity. An electric vehicle generally includes a Rechargeable Electricity Storage System (RESS) (also called Full Electric Vehicles (FEV)). Power storage methods may include: chemical energy stored on the vehicle in on-board batteries (e.g., Battery Electric Vehicle or BEV), on board kinetic energy storage (e.g., flywheels), and/or static energy (e.g., by on-board double-layer capacitors). Batteries, electric double-layer capacitors, and flywheel energy storage may be forms of rechargeable on-board electrical storage.

[0243] The term "hybrid electric vehicle" refers to a vehicle that may combine a conventional (usually fossil fuel-powered) powertrain with some form of electric propulsion. Most hybrid electric vehicles combine a conventional Internal Combustion Engine (ICE) propulsion system with an electric propulsion system (hybrid vehicle drivetrain). In parallel hybrids, the ICE and the electric motor are both connected to the mechanical transmission and can simultaneously transmit power to drive the wheels, usually through a conventional transmission. In series hybrids, only the electric motor drives the drivetrain, and a smaller ICE works as a generator to power the electric motor or to recharge the batteries. Power-split hybrids combine series and parallel characteristics. A full hybrid, sometimes also called a strong hybrid, is a vehicle that can run on just the engine, just the batteries, or a combination of both. A mid hybrid is a vehicle that cannot be driven solely on its electric motor, because the electric motor does not have enough power to propel the vehicle on its own.

[0244] The term "Rechargeable Electric Vehicle" or "REV" refers to a vehicle with on board rechargeable energy storage, including electric vehicles and hybrid electric vehicles.

What is claimed is:

1. An autonomous vehicle control system, comprising:

a sensor, the sensor sensing an environment surrounding a vehicle associated with the vehicle control system, wherein a feature vector describes at least a portion of the environment at a current location of the vehicle on a route;

a processor communicatively coupled with the sensor,

a memory communicatively coupled with and readable by the processor and storing therein a set of instructions which, when executed by the processor, causes the processor to determine the current location of the vehicle on the route by:

receiving information from the sensor regarding the feature vector;

retrieving feature vector particle information associated with two or more segments of a route of travel for the vehicle, wherein the feature vector particle information comprises a vocabulary of visual descriptors;

applying particle filtering to the received information from the sensor regarding the feature vector and the retrieved feature vector particle information associated with two or more segments of a route of travel for the vehicle; and

determining the current location of the vehicle on the route based on the applied particle filtering.

2. The control system of claim **1**, wherein the vocabulary of visual descriptors is based on Oriented-Rotational Brief (ORB) descriptors for the feature vector particle information associated with the two or more segments.

3. The control system of claim **2**, wherein the vocabulary of visual descriptors is derived from the ORB descriptors using a Hierarchical Bag of Words (BoW).

4. The control system of claim **1**, wherein the feature vector particle information is retrieved using an Inverted File Index method.

5. The control system of claim **1**, wherein applying particle filtering to the received information from the sensor regarding the feature vector and the retrieved feature vector particle information associated with two or more segments of a route of travel for the vehicle comprises applying a Monte Carlo localization algorithm to the retrieved feature vector particle information associated with two or more segments of a route of travel for the vehicle to select a set of local particles, updating the selected set of local particles based on motion of the vehicle, and weighting the updated set of local particles based on a distance of each particle in the updated set of local particles to a closest segment point and further based on an image descriptor in the visual vocabulary or each particle.

6. The control system of claim **5**, wherein applying particle filtering to the received information from the sensor regarding the feature vector and the retrieved feature vector particle information associated with two or more segments of a route of travel for the vehicle further comprises determining the distance of each particle in the updated set of local particles to the closest segment point using a KD tree.

7. The control system of claim **6**, wherein applying particle filtering to the received information from the sensor regarding the feature vector and the retrieved feature vector particle information associated with two or more segments of a route of travel for the vehicle further comprises applying stochastic universal resampling to the updated set of local particles.

8. A method for determining a current location of a vehicle on a route, the method comprising:

receiving, by a control system of the vehicle, information from the sensor regarding the feature vector;

retrieving, by the control system of the vehicle, feature vector particle information associated with two or more segments of a route of travel for the vehicle, wherein the feature vector particle information comprises a vocabulary of visual descriptors;

applying, by the control system of the vehicle, particle filtering to the received information from the sensor regarding the feature vector and the retrieved feature vector particle information associated with two or more segments of a route of travel for the vehicle; and

determining, by the control system of the vehicle, the current location of the vehicle on the route based on the applied particle filtering.

9. The method of claim **8**, wherein the vocabulary of visual descriptors is based on Oriented-Rotational Brief (ORB) descriptors for the feature vector particle information associated with the two or more segments.

10. The method of claim **9**, wherein the vocabulary of visual descriptors is derived from the ORB descriptors using a Hierarchical Bag of Words (BoW).

11. The method of claim **8**, wherein the feature vector particle information is retrieved using an Inverted File Index method.

12. The method of claim **8**, wherein applying particle filtering to the received information from the sensor regarding the feature vector and the retrieved feature vector particle information associated with two or more segments of a route of travel for the vehicle comprises applying a Monte Carlo localization algorithm to the retrieved feature vector particle information associated with two or more segments of a route of travel for the vehicle to select a set of local particles, updating the selected set of local particles based on motion of the vehicle, and weighting the updated set of local particles based on a distance of each particle in the updated set of local particles to a closest segment point and further based on an image descriptor in the visual vocabulary or each particle.

13. The method of claim **12**, wherein applying particle filtering to the received information from the sensor regarding the feature vector and the retrieved feature vector particle information associated with two or more segments of a route of travel for the vehicle further comprises determining the distance of each particle in the updated set of local particles to the closest segment point using a KD tree.

14. The method of claim **13**, wherein applying particle filtering to the received information from the sensor regarding the feature vector and the retrieved feature vector particle information associated with two or more segments of a route of travel for the vehicle further comprises applying stochastic universal resampling to the updated set of local particles.

15. A non-transitory, computer-readable medium comprising a set of instructions stored therein which, when executed by a processor, causes the processor to determine a current location of a vehicle on a route by:

receiving information from the sensor regarding the feature vector;

retrieving feature vector particle information associated with two or more segments of a route of travel for the vehicle, wherein the feature vector particle information comprises a vocabulary of visual descriptors;

applying particle filtering to the received information from the sensor regarding the feature vector and the retrieved feature vector particle information associated with two or more segments of a route of travel for the vehicle; and

determining the current location of the vehicle on the route based on the applied particle filtering.

16. The non-transitory, computer-readable medium of claim **15**, wherein the vocabulary of visual descriptors is based on Oriented-Rotational Brief (ORB) descriptors for the feature vector particle information associated with the two or more segments and wherein the vocabulary of visual descriptors is derived from the ORB descriptors using a Hierarchical Bag of Words (BoW).

17. The non-transitory, computer-readable medium of claim **15**, wherein the feature vector particle information is retrieved using an Inverted File Index method.

18. The non-transitory, computer-readable medium of claim **15**, wherein applying particle filtering to the received information from the sensor regarding the feature vector and the retrieved feature vector particle information associated with two or more segments of a route of travel for the vehicle comprises applying a Monte Carlo localization algorithm to the retrieved feature vector particle information associated with two or more segments of a route of travel for the vehicle to select a set of local particles, updating the selected set of local particles based on motion of the vehicle, and weighting the updated set of local particles based on a distance of each particle in the updated set of local particles to a closest segment point and further based on an image descriptor in the visual vocabulary or each particle.

19. The non-transitory, computer-readable medium of claim **18**, wherein applying particle filtering to the received information from the sensor regarding the feature vector and the retrieved feature vector particle information associated with two or more segments of a route of travel for the vehicle further comprises determining the distance of each particle in the updated set of local particles to the closest segment point using a KD tree.

20. The non-transitory, computer-readable medium of claim **19**, wherein applying particle filtering to the received information from the sensor regarding the feature vector and the retrieved feature vector particle information associated with two or more segments of a route of travel for the vehicle further comprises applying stochastic universal resampling to the updated set of local particles.

* * * * *