Placeholder Sheet for Supplemental Content

Application Number: 18928135 Document Date: 10/27/2024

The presence of this form indicates that the following document type was received in electronic format on the date identified above. This document is stored separately from the typical case contents which are stored in image format.

Since this was an electronic submission, there is no physical artifact folder, no artifact folder is recorded and no paper documents or physical media exist.

- Drawing

At the time of document entry (noted above):

- USPTO employees may access this supplemental content via Docket Application Viewer (DAV) or Supplemental Content Viewer (SCV).
- External customers may access this supplemental content via Patent Center.

Form Revision Date: March 1, 2024

Doc Code: ECOMM.AUTH/ECOMM.WTDW
Doc Description: Internet Communications Authorized/Internet Communications Authorization Withdrawn

PTO/SB/439 (11-15)

AUTHORIZATION FOR INTERNET COMMUNICATIONS IN A PATENT APPLICATION OR REQUEST TO WITHDRAW AUTHORIZATION FOR INTERNET COMMUNICATIONS		
	Application No.	
	Filing Date	
	First Named Inventor	Bennet Langlotz
	Art Unit	
	Examiner Name	
	Practitioner Docket No.	BKL-11C5

To: Commissioner for Patents
P.O. Box 1450
Alexandria, VA 22313-1450

I. To authorize permission for Internet Communications.

☑ Recognizing that Internet communications are not secure, I hereby authorize the USPTO to communicate with the undersigned and practitioners in accordance with 37 CFR 1.33 and 37 CFR 1.34 concerning any subject matter of this application via video conferencing, instant messaging, or electronic mail. I understand that a copy of these communications will be made of record in the application file. (MPEP 502.03)

II. To withdraw authorization for Internet Communications.

☐ The authorization given on _____, to the USPTO to communicate with the undersigned and any practitioner in accordance with 37 CFR 1.33 and 37 CFR 1.34 concerning any subject matter of this application via Internet communications such as video conferencing, instant messaging, or electronic mail is hereby withdrawn. I understand that the withdrawal is effective when approved rather than when received.

I am the

☐ applicant.

☑ attorney or agent of record. Registration number 35,928.

☐ attorney or agent acting under 37 CFR 1.34. Registration number _____.

/bennet langlotz/ — Signature

10-27-2024 — Date

Bennet Langlotz — Typed or printed name

888-852-4246 — Telephone Number

NOTE: This form must be signed in accordance with 37 CFR 1.33. See 37 CFR 1.4 for signature requirements and certifications. Juristic entities must be represented by a patent practitioner (see 37 CFR 1.31, which is applicable to any paper filed on or after September 16, 2012, that is presented on behalf of a juristic entity, regardless of application filing date). Submit multiple forms if more than one signature is required, see below*.

☐ * Total of _____ forms are submitted.

Privacy Act Statement

The **Privacy Act of 1974 (P.L. 93-579)** requires that you be given certain information in connection with your submission of the attached form related to a patent application or patent. Accordingly, pursuant to the requirements of the Act, please be advised that: (1) the general authority for the collection of this information is 35 U.S.C. 2(b)(2); (2) furnishing of the information solicited is voluntary; and (3) the principal purpose for which the information is used by the U.S. Patent and Trademark Office is to process and/or examine your submission related to a patent application or patent. If you do not furnish the requested information, the U.S. Patent and Trademark Office may not be able to process and/or examine your submission, which may result in termination of proceedings or abandonment of the application or expiration of the patent.

The information provided by you in this form will be subject to the following routine uses:

1. The information on this form will be treated confidentially to the extent allowed under the Freedom of Information Act (5 U.S.C. 552) and the Privacy Act (5 U.S.C 552a). Records from this system of records may be disclosed to the Department of Justice to determine whether disclosure of these records is required by the Freedom of Information Act.
2. A record from this system of records may be disclosed, as a routine use, in the course of presenting evidence to a court, magistrate, or administrative tribunal, including disclosures to opposing counsel in the course of settlement negotiations.
3. A record in this system of records may be disclosed, as a routine use, to a Member of Congress submitting a request involving an individual, to whom the record pertains, when the individual has requested assistance from the Member with respect to the subject matter of the record.
4. A record in this system of records may be disclosed, as a routine use, to a contractor of the Agency having need for the information in order to perform a contract. Recipients of information shall be required to comply with the requirements of the Privacy Act of 1974, as amended, pursuant to 5 U.S.C. 552a(m).
5. A record related to an International Application filed under the Patent Cooperation Treaty in this system of records may be disclosed, as a routine use, to the International Bureau of the World Intellectual Property Organization, pursuant to the Patent Cooperation Treaty.
6. A record in this system of records may be disclosed, as a routine use, to another federal agency for purposes of National Security review (35 U.S.C. 181) and for review pursuant to the Atomic Energy Act (42 U.S.C. 218(c)).
7. A record from this system of records may be disclosed, as a routine use, to the Administrator, General Services, or his/her designee, during an inspection of records conducted by GSA as part of that agency's responsibility to recommend improvements in records management practices and programs, under authority of 44 U.S.C. 2904 and 2906. Such disclosure shall be made in accordance with the GSA regulations governing inspection of records for this purpose, and any other relevant (*i.e.*, GSA or Commerce) directive. Such disclosure shall not be used to make determinations about individuals.
8. A record from this system of records may be disclosed, as a routine use, to the public after either publication of the application pursuant to 35 U.S.C. 122(b) or issuance of a patent pursuant to 35 U.S.C. 151. Further, a record may be disclosed, subject to the limitations of 37 CFR 1.14, as a routine use, to the public if the record was filed in an application which became abandoned or in which the proceedings were terminated and which application is referenced by either a published application, an application open to public inspection or an issued patent.
9. A record from this system of records may be disclosed, as a routine use, to a Federal, State, or local law enforcement agency, if the USPTO becomes aware of a violation or potential violation of law or regulation.

PTO/AIA/01 (06-12)
Approved for use through 01/31/2014. OMB 0651-0032
U.S. Patent and Trademark Office; U.S. DEPARTMENT OF COMMERCE
Under the Paperwork Reduction Act of 1995, no persons are required to respond to a collection of information unless it displays a valid OMB control number.

DECLARATION (37 CFR 1.63) FOR UTILITY OR DESIGN APPLICATION USING AN APPLICATION DATA SHEET (37 CFR 1.76)

Title of Invention	VEHICLE GEAR SELECTION CONTROL

As the below named inventor, I hereby declare that:

This declaration is directed to:

- [x] The attached application, or
- [ ] United States application or PCT international application number _____

filed on _____.

The above-identified application was made or authorized to be made by me.

I believe that I am the original inventor or an original joint inventor of a claimed invention in the application.

I hereby acknowledge that any willful false statement made in this declaration is punishable under 18 U.S.C. 1001 by fine or imprisonment of not more than five (5) years, or both.

WARNING:

Petitioner/applicant is cautioned to avoid submitting personal information in documents filed in a patent application that may contribute to identity theft. Personal information such as social security numbers, bank account numbers, or credit card numbers (other than a check or credit card authorization form PTO-2038 submitted for payment purposes) is never required by the USPTO to support a petition or an application. If this type of personal information is included in documents submitted to the USPTO, petitioners/applicants should consider redacting such personal information from the documents before submitting them to the USPTO. Petitioner/applicant is advised that the record of a patent application is available to the public after publication of the application (unless a non-publication request in compliance with 37 CFR 1.213(a) is made in the application) or issuance of a patent. Furthermore, the record from an abandoned application may also be available to the public if the application is referenced in a published application or an issued patent (see 37 CFR 1.14). Checks and credit card authorization forms PTO-2038 submitted for payment purposes are not retained in the application file and therefore are not publicly available.

LEGAL NAME OF INVENTOR

Inventor: Bennet Langlotz Date (Optional) : 01/03/2024

Signature: /bennet langlotz/

Note: An application data sheet (PTO/SB/14 or equivalent), including naming the entire inventive entity, must accompany this form or must have been previously filed. Use an additional PTO/AIA/01 form for each additional inventor.

This collection of information is required by 35 U.S.C. 115 and 37 CFR 1.63. The information is required to obtain or retain a benefit by the public which is to file (and by the USPTO to process) an application. Confidentiality is governed by 35 U.S.C. 122 and 37 CFR 1.11 and 1.14. This collection is estimated to take 1 minute to complete, including gathering, preparing, and submitting the completed application form to the USPTO. Time will vary depending upon the individual case. Any comments on the amount of time you require to complete this form and/or suggestions for reducing this burden, should be sent to the Chief Information Officer, U.S. Patent and Trademark Office, U.S. Department of Commerce, P.O. Box 1450, Alexandria, VA 22313-1450. DO NOT SEND FEES OR COMPLETED FORMS TO THIS ADDRESS. **SEND TO: Commissioner for Patents, P.O. Box 1450, Alexandria, VA 22313-1450.**

If you need assistance in completing the form, call 1-800-PTO-9199 and select option 2.

Privacy Act Statement

The **Privacy Act of 1974 (P.L. 93-579)** requires that you be given certain information in connection with your submission of the attached form related to a patent application or patent. Accordingly, pursuant to the requirements of the Act, please be advised that: (1) the general authority for the collection of this information is 35 U.S.C. 2(b)(2); (2) furnishing of the information solicited is voluntary; and (3) the principal purpose for which the information is used by the U.S. Patent and Trademark Office is to process and/or examine your submission related to a patent application or patent. If you do not furnish the requested information, the U.S. Patent and Trademark Office may not be able to process and/or examine your submission, which may result in termination of proceedings or abandonment of the application or expiration of the patent.

The information provided by you in this form will be subject to the following routine uses:

1. The information on this form will be treated confidentially to the extent allowed under the Freedom of Information Act (5 U.S.C. 552) and the Privacy Act (5 U.S.C 552a). Records from this system of records may be disclosed to the Department of Justice to determine whether disclosure of these records is required by the Freedom of Information Act.
2. A record from this system of records may be disclosed, as a routine use, in the course of presenting evidence to a court, magistrate, or administrative tribunal, including disclosures to opposing counsel in the course of settlement negotiations.
3. A record in this system of records may be disclosed, as a routine use, to a Member of Congress submitting a request involving an individual, to whom the record pertains, when the individual has requested assistance from the Member with respect to the subject matter of the record.
4. A record in this system of records may be disclosed, as a routine use, to a contractor of the Agency having need for the information in order to perform a contract. Recipients of information shall be required to comply with the requirements of the Privacy Act of 1974, as amended, pursuant to 5 U.S.C. 552a(m).
5. A record related to an International Application filed under the Patent Cooperation Treaty in this system of records may be disclosed, as a routine use, to the International Bureau of the World Intellectual Property Organization, pursuant to the Patent Cooperation Treaty.
6. A record in this system of records may be disclosed, as a routine use, to another federal agency for purposes of National Security review (35 U.S.C. 181) and for review pursuant to the Atomic Energy Act (42 U.S.C. 218(c)).
7. A record from this system of records may be disclosed, as a routine use, to the Administrator, General Services, or his/her designee, during an inspection of records conducted by GSA as part of that agency's responsibility to recommend improvements in records management practices and programs, under authority of 44 U.S.C. 2904 and 2906. Such disclosure shall be made in accordance with the GSA regulations governing inspection of records for this purpose, and any other relevant (*i.e.*, GSA or Commerce) directive. Such disclosure shall not be used to make determinations about individuals.
8. A record from this system of records may be disclosed, as a routine use, to the public after either publication of the application pursuant to 35 U.S.C. 122(b) or issuance of a patent pursuant to 35 U.S.C. 151. Further, a record may be disclosed, subject to the limitations of 37 CFR 1.14, as a routine use, to the public if the record was filed in an application which became abandoned or in which the proceedings were terminated and which application is referenced by either a published application, an application open to public inspection or an issued patent.
9. A record from this system of records may be disclosed, as a routine use, to a Federal, State, or local law enforcement agency, if the USPTO becomes aware of a violation or potential violation of law or regulation.

PATENT COOPERATION TREATY

From the INTERNATIONAL SEARCHING AUTHORITY

To:
BRAXTON PERRONE, PLLC
5 COWBOYS WAY, SUITE 300, UNIT 32
FRISCO, TX 75034
UNITED STATES OF AMERICA

PCT

NOTIFICATION OF TRANSMITTAL OF THE INTERNATIONAL SEARCH REPORT AND THE WRITTEN OPINION OF THE INTERNATIONAL SEARCHING AUTHORITY, OR THE DECLARATION

(PCT Rule 44.1)

Date of mailing *(day/month/year)*	**08 May 2024 (08.05.2024)**
Applicant's or agent's file reference **BLANG00005PCT**	**FOR FURTHER ACTION** See paragraphs 1 and 4 below
International application No. **PCT/US2024/015118**	International filing date *(day/month/year)* **09 February 2024 (09.02.2024)**
Applicant **BULLETPROOF PROPERTY MANAGEMENT, LLC**	

1. ☑ The applicant is hereby notified that the international search report and the written opinion of the International Searching Authority have been established and are transmitted herewith.

   Filing of amendments and statement under Article 19:
   The applicant is entitled, if he so wishes, to amend the claims of the international application (see Rule 46):

   When? The time limit for filing such amendments is normally two months from the date of transmittal of the international search report.

   How? Directly to the International Bureau preferably through ePCT, or on paper to:
   The International Bureau of WIPO, 34, chemin des Colombettes, 1211 Geneva 20, Switzerland

   For more detailed instructions, see *PCT Applicant's Guide*, International Phase, paragraphs 9.004 – 9.011.

2. ☐ The applicant is hereby notified that no international search report will be established and that the declaration under Article 17(2)(a) to that effect and the written opinion of the International Searching Authority are transmitted herewith.

3. ☐ **With regard to any protest** against payment of (an) additional fee(s) under Rule 40.2, the applicant is notified that:
   - ☐ the protest together with the decision thereon has been transmitted to the International Bureau together with any request to forward the texts of both the protest and the decision thereon to the designated Offices.
   - ☐ no decision has been made yet on the protest; the applicant will be notified as soon as a decision is made.

4. Reminders

   The applicant may **submit comments on an informal basis on the written opinion of the International Searching Authority** to the International Bureau. These comments will be made available to the public after international publication. The International Bureau will send a copy of such comments to all designated Offices unless an international preliminary examination report has been or is to be established.

   Shortly after the expiration of **18 months from the priority date, the international application will be published** by the International Bureau. If the applicant wishes to avoid or postpone publication, a notice of withdrawal of the international application, or of the priority claim, must reach the International Bureau before the completion of the technical preparations for international publication (Rules 90bis.1 and 90bis.3).

   Within **19 months** from the priority date, but only in respect of some designated Offices, a demand for international preliminary examination must be filed if the applicant wishes to postpone the entry into the national phase **until 30 months** from the priority date (in some Offices even later); otherwise, the applicant must, **within 20 months** from the priority date, perform the prescribed acts for **entry into the national phase** before those designated Offices. In respect of other designated Offices, the time limit of **30 months** (or later) will apply even if no demand is filed within 19 months. For details about the applicable time limits, Office by Office, see www.wipo.int/pct/en/texts/time_limits.html and the PCT Applicant's Guide, National Chapters.

   Within **22 months from the priority date, the applicant may request that a supplementary international search be carried out** by a different International Searching Authority that offers this service (Rule 45bis.1). The procedure for requesting supplementary international search is described in the PCT Applicant's Guide, International Phase, paragraphs 8.006-8.032.

Name and mailing address of the ISA/US	Authorized officer
Mail Stop PCT, Attn: ISA/US **Commissioner for Patents** **P.O. Box 1450, Alexandria, VA 22313-1450**	**MATOS** **TAINA**
Facsimile No. **571-273-8300**	Telephone No. **571-272-4300**

Form PCT/ISA/220 (revised January 2020)

PATENT COOPERATION TREATY

PCT

INTERNATIONAL SEARCH REPORT

(PCT Article 18 and Rules 43 and 44)

Applicant's or agent's file reference **BLANG00005PCT**		**FOR FURTHER ACTION** see Form PCT/ISA/220 as well as, where applicable, item 5 below.
International application No. **PCT/US2024/015118**	International filing date *(day/month/year)* **09 February 2024 (09.02.2024)**	(Earliest) Priority Date *(day/month/year)* **05 June 2023 (05.06.2023)**
Applicant **BULLETPROOF PROPERTY MANAGEMENT, LLC**		

This international search report has been prepared by this International Searching Authority and is transmitted to the applicant according to Article 18. A copy is being transmitted to the International Bureau.

This international search report consists of a total of __2__ sheets.

☐ It is also accompanied by a copy of each prior art document cited in this report.

1. **Basis of the report**
   a. With regard to the **language**, the international search was carried out on the basis of:
      ☑ the international application in the language in which it was filed.
      ☐ a translation of the international application into _____ which is the language of a translation furnished for the purposes of international search (Rules 12.3(a) and 23.1(b)).
   b. ☐ This international search report has been established taking into account the **rectification of an obvious mistake** authorized by or notified to this Authority under Rule 91 (Rule 43.6*bis*(a)).
   c. ☐ With regard to any **nucleotide and/or amino acid sequence** disclosed in the international application, see Box No. I.
2. ☐ **Certain claims were found unsearchable** (see Box No. II).
3. ☐ **Unity of invention is lacking** (see Box No. III).
4. With regard to the **title**,
   ☑ the text is approved as submitted by the applicant.
   ☐ the text has been established by this Authority to read as follows:
5. With regard to the **abstract**,
   ☑ the text is approved as submitted by the applicant.
   ☐ the text has been established, according to Rule 38.2, by this Authority as it appears in Box No. IV. The applicant may, within one month from the date of mailing of this international search report, submit comments to this Authority.
6. With regard to the **drawings**,
   a. the figure of the **drawings** to be published with the abstract is Figure No.
      ☐ as suggested by the applicant.
      ☐ as selected by this Authority, because the applicant failed to suggest a figure.
      ☐ as selected by this Authority, because this figure better characterizes the invention.
   b. ☑ none of the figures is to be published with the abstract.

Form PCT/ISA/210 (first sheet) (July 2022)

INTERNATIONAL SEARCH REPORT

International application No.
PCT/US2024/015118

A. CLASSIFICATION OF SUBJECT MATTER

IPC: ***B60W 10/04*** (2024.01); ***B60W 10/18*** (2024.01); ***B60W 10/20*** (2024.01); ***B60W 30/06*** (2024.01); *B60W 50/10* (2024.01)

CPC: ***B60W 30/06; B60W 10/18; B60W 10/04; B60W 10/20;*** *B60W 50/10*

According to International Patent Classification (IPC) or to both national classification and IPC

B. FIELDS SEARCHED

Minimum documentation searched (classification system followed by classification symbols)

See Search History Document

Documentation searched other than minimum documentation to the extent that such documents are included in the fields searched

See Search History Document

Electronic data base consulted during the international search (name of data base and, where practicable, search terms used)

See Search History Document

C. DOCUMENTS CONSIDERED TO BE RELEVANT

Category*	Citation of document, with indication, where appropriate, of the relevant passages	Relevant to claim No.
	US 2021/0269019 A1 (BAYERISCHE MOTOREN WERKE AKTIENGESELLSCHAFT) 02 September 2021 (02.09.2021)	
X	entire document	1-5, 7-10
Y	entire document	6, 11-20
	US 2013/0144492 A1 (TAKANO et al.) 06 June 2013 (06.06.2013)	
Y	entire document	6, 16
	US 2020/0207334 A1 (HYUNDAI MOTOR COMPANY et al.) 02 July 2020 (02.07.2020)	
Y	entire document	11-20
	US 2011/0080305 A1 (TOLEDO et al.) 07 April 2011 (07.04.2011)	
A	entire document	1-20

☐ Further documents are listed in the continuation of Box C.

☐ See patent family annex.

* Special categories of cited documents:

"A" document defining the general state of the art which is not considered to be of particular relevance

"D" document cited by the applicant in the international application

"E" earlier application or patent but published on or after the international filing date

"L" document which may throw doubts on priority claim(s) or which is cited to establish the publication date of another citation or other special reason (as specified)

"O" document referring to an oral disclosure, use, exhibition or other means

"P" document published prior to the international filing date but later than the priority date claimed

"T" later document published after the international filing date or priority date and not in conflict with the application but cited to understand the principle or theory underlying the invention

"X" document of particular relevance; the claimed invention cannot be considered novel or cannot be considered to involve an inventive step when the document is taken alone

"Y" document of particular relevance; the claimed invention cannot be considered to involve an inventive step when the document is combined with one or more other such documents, such combination being obvious to a person skilled in the art

"&" document member of the same patent family

Date of the actual completion of the international search	Date of mailing of the international search report
26 April 2024 (26.04.2024)	**08 May 2024 (08.05.2024)**
Name and mailing address of the ISA/US **Mail Stop PCT, Attn: ISA/US** **Commissioner for Patents** **P.O. Box 1450, Alexandria, VA 22313-1450** Facsimile No. **571-273-8300**	Authorized officer **MATOS** **TAINA** Telephone No. **571-272-4300**

Form PCT/ISA/210 (second sheet) (July 2022)

PATENT COOPERATION TREATY

From the INTERNATIONAL SEARCHING AUTHORITY

To:
BRAXTON PERRONE, PLLC
5 COWBOYS WAY, SUITE 300, UNIT 32
FRISCO, TX 75034
UNITED STATES OF AMERICA

PCT

WRITTEN OPINION OF THE
INTERNATIONAL SEARCHING AUTHORITY

(PCT Rule 43*bis*.1)

Date of mailing *(day/month/year)*	**08 May 2024 (08.05.2024)**
Applicant's or agent's file reference **BLANG00005PCT**	**FOR FURTHER ACTION** See paragraph 2 below

International application No.	International filing date *(day/month/year)*	Priority date *(day/month/year)*
PCT/US2024/015118	**09 February 2024 (09.02.2024)**	**05 June 2023 (05.06.2023)**

International Patent Classification (IPC) or both national classification and IPC
IPC: See continuation sheet
CPC: ***B60W 30/06; B60W 10/18; B60W 10/04; B60W 10/20;*** *B60W 50/10*

Applicant
BULLETPROOF PROPERTY MANAGEMENT, LLC

1. This opinion contains indications relating to the following items:

- [✓] Box No. I Basis of the opinion
- [ ] Box No. II Priority
- [ ] Box No. III Non-establishment of opinion with regard to novelty, inventive step and industrial applicability
- [ ] Box No. IV Lack of unity of invention
- [✓] Box No. V Reasoned statement under Rule 43*bis*.1(a)(i) with regard to novelty, inventive step and industrial applicability; citations and explanations supporting such statement
- [ ] Box No. VI Certain documents cited
- [ ] Box No. VII Certain defects in the international application
- [ ] Box No. VIII Certain observations on the international application

2. **FURTHER ACTION**

If a demand for international preliminary examination is made, this opinion will be considered to be a written opinion of the International Preliminary Examining Authority ("IPEA") except that this does not apply where the applicant chooses an Authority other than this one to be the IPEA and the chosen IPEA has notified the International Bureau under Rule 66.1*bis*(b) that written opinions of this International Searching Authority will not be so considered.

If this opinion is, as provided above, considered to be a written opinion of the IPEA, the applicant is invited to submit to the IPEA a written reply together, where appropriate, with amendments, before the expiration of 3 months from the date of mailing of Form PCT/ISA/220 or before the expiration of 22 months from the priority date, whichever expires later.

For further options, see Form PCT/ISA/220.

Name and mailing address of the ISA/US	Date of completion of this opinion	Authorized officer
Mail Stop PCT, Attn: ISA/US **Commissioner for Patents** **P.O. Box 1450, Alexandria, VA 22313-1450** Facsimile No. **571-273-8300**	**26 April 2024 (26.04.2024)**	**MATOS, Taina** Telephone No. **571-272-4300**

Form PCT/ISA/237 (cover sheet) (July 2022)

WRITTEN OPINION OF THE INTERNATIONAL SEARCHING AUTHORITY

International application No.
PCT/US2024/015118

Box No. I **Basis of the opinion**

1. With regard to the **language**, this opinion has been established on the basis of:
   - [✓] the international application in the language in which it was filed.
   - [ ] a translation of the international application into _____ which is the language of a translation furnished for the purposes of international search (Rules 12.3(a) and 23.1(b)).

2. [ ] This opinion has been established taking into account the **rectification of an obvious mistake** authorized by or notified to this Authority under Rule 91 (Rule 43*bis*.1(b)).

3. [ ] With regard to any **nucleotide and/or amino acid sequence** disclosed in the international application, this opinion has been established on the basis of a sequence listing:
   - a. [ ] forming part of the international application as filed.
   - b. [ ] furnished subsequent to the international filing date for the purposes of international search (Rule 13*ter*.1(a)),
     - [ ] accompanied by a statement to the effect that the sequence listing does not go beyond the disclosure in the international application as filed.

4. [ ] With regard to any nucleotide and/or amino acid sequence disclosed in the international application, this opinion has been established to the extent that a meaningful opinion could be formed without a WIPO Standard ST.26 compliant sequence listing.

5. Additional comments:

Box No. V **Reasoned statement under Rule 43*bis*.1(a)(i) with regard to novelty, inventive step and industrial applicability; citations and explanations supporting such statement**

1. Statement

Novelty (N)	Claims	6, 11-20	YES
	Claims	1-5, 7-10	NO
Inventive step (IS)	Claims	None	YES
	Claims	1-20	NO
Industrial applicability (IA)	Claims	1-20	YES
	Claims	None	NO

2. Citations and explanations:

---------- EXPLANATION ----------

Claims 1-5 and 7-10 lack novelty under PCT Article 33(2) as being anticipated by US 2021/0269019 to Bayerische Motoren Werke Aktiengesellschaft.

Regarding Claim 1, Bayerische Motoren Werke Aktiengesellschaft discloses a motor vehicle comprising: a frame (a motor vehicle with an automated pulling out system; BMW; Abstract; it is inherent that a motor vehicle will have a frame) having wheels (wheels 5a and 5b; Fig. 2b; [0053]); a motor connected to the frame (it is inherent that a motor vehicle will have a frame and motor); a steering control connected to the wheels to establish a steering angle (steerable wheels 5a and 5b are fully locked in the direction of the pulling-out side, and a forward move 20 can be carried out with full steering lock; Fig. 2b; [0053]); a controller (the processor of a motor vehicle controller which has software for carrying out the method; Para. [0042]) operably connected to the steering control, to the motor, and to the wheels; the controller operable to selectably drive the wheels in a forward direction in a drive mode and in a rearward direction in a reverse mode (in step 100, the driver activates the pulling-out function, and at step 110 a linear reversing move is completed; Fig. 1; [0049]; after carrying out the initial reversing move, the steerable wheels 5a, and 5b are fully locked in the direction of the pulling out side, and an automatic switching of travel direction and forward move 20 is carried out; Fig. 2b; [0053]); and the controller (the processor of a motor vehicle controller which has software for carrying out the method; Para. [0042]) operable to select a direction for driving the wheels in response to a pattern of steering angle movements, without operator indication of a direction (in step 100, the driver activates the pulling-out function, and at step 110 a linear reversing move is completed; Fig. 1; [0049]; after carrying out the initial reversing move, the steerable wheels 5a, and 5b are fully locked in the direction of the pulling out side, and an automatic switching of travel direction and forward move 20 is carried out; Fig. 2b; [0053]).

Regarding Claim 2, Bayerische Motoren Werke Aktiengesellschaft discloses the motor vehicle of claim 1 wherein the controller is operable to change from reverse mode to drive mode without operation of a selector by a driver (after carrying out the initial reversing move, the steerable wheels 5a, and 5b are fully locked in the direction of the pulling out side, and an automatic switching of travel direction and forward move 20 is carried out; Fig. 2b; [0053]).

Regarding Claim 3, Bayerische Motoren Werke Aktiengesellschaft discloses the motor vehicle of claim 1 wherein the controller is operable while the vehicle is underway in one of the forward and reverse directions, and has stopped momentarily, to determine whether to remain in the same direction or to change direction (during the forward move 20 or immediately after the end of the forward move, it is checked in the query 130 whether the vehicle 1 could leave the parking space, if this is the case, after switching the travel direction and straightening the wheels 5a and 5b, the linear reversing move 30 is carried out; Fig. 2c; [0055-0056]).

Regarding Claim 4, Bayerische Motoren Werke Aktiengesellschaft discloses the motor vehicle of claim 1 wherein the pattern of steering angle movements includes steering in a first direction, then steering in the opposite direction (a forward move 20 is carried out with full steering lock; Fig. 2b; [0053]; during

Box No. V **Reasoned statement under Rule 43*bis*.1(a)(i) with regard to novelty, inventive step and industrial applicability; citations and explanations supporting such statement**

the forward move 20 or immediately after the end of the forward move, it is checked in the query 130 whether the vehicle 1 could leave the parking space, if this is the case, after switching the travel direction and straightening the wheels 5a and 5b, the linear reversing move 30 is carried out; Fig. 2c; [0055-0056]).

Regarding Claim 5, Bayerische Motoren Werke Aktiengesellschaft discloses the motor vehicle of claim 1 wherein the controller is operable to offer an auto-shift in response to a prior pattern of vehicle operation based on at least one of distance traveled, velocity profile, and steering angle profile (in step 100, the driver activates the pulling-out function by selecting a parking menu on the display screen; Fig. 1; [0046]; the first move does not necessarily have to be a linear reversing move but rather instead a steered forward move can be selected as the first move; in dependence on the distances to the front boundary vehicle 2 and to the rear boundary vehicle 3; Fig. 1; [0050]).

Regarding Claim 7, Bayerische Motoren Werke Aktiengesellschaft discloses the motor vehicle of claim 1 wherein the controller is operable to offer an auto-shift only if velocities are less than a selected threshold (a forward move 20 is carried out with full steering lock; Fig. 2b; [0053]; during the forward move 20 or immediately after the end of the forward move, it is checked in the query 130 whether the vehicle 1 could leave the parking space, if this is the case, after switching the travel direction and straightening the wheels 5a and 5b, the linear reversing move 30 is carried out; Fig. 2c; [0055-0056]; the vehicle comes to a stop before any change in direction).

Regarding Claim 8, Bayerische Motoren Werke Aktiengesellschaft discloses the motor vehicle of claim 1 wherein the controller is operable to offer an auto-shift only if distance traveled is less than a selected threshold (the first move does not necessarily have to be a linear reversing move but rather instead a steered forward movement; if there is very small distance to the rear vehicle 3 before beginning the parking maneuver and greater distance to the front vehicle 2, a steered forward movement may be selected; Fig. 1; [0050]; a steered forward movement includes fully locked wheels in the direction of a pull-out side and an automatic switching of the travel direction; Fig. 2b; [0053]).

Regarding Claim 9, Bayerische Motoren Werke Aktiengesellschaft discloses the motor vehicle of claim 1 wherein the controller is operable to offer an auto-shift only if a first limited distance associated with vehicle length was covered with a steeling angle less than a first threshold (the automated parking maneuver begins in step 110 with a linear reversing move 10 in parallel to the curbstone 4, wherein the vehicle is moved back until it reaches or falls below a specific threshold value for the distance to the rear vehicle 3; Fig. 1; [0049]), and a second distance was traveled with a steering angle greater than a second selected threshold and in a first direction, and the vehicle subsequently stops, and the steering angle is adjusted to a second direction opposite the first direction (Fig. 2b illustrates the situation after carrying out the initial reversing move; steerable wheels 5a and 5b are now fully locked in the direction of the pulling-out side and after switching the travel direction, a forward move 20 is carried out with full steering lock; Fig. 2b; [0053-0055]).

Regarding Claim 10, Bayerische Motoren Werke Aktiengesellschaft discloses the motor vehicle of claim 1 including a driver input device operably connected to the controller (a parking menu shown on a display screen in the center console; Fig. 1; [0046]), and wherein the controller is operable to offer an auto-shift and enact the auto shift in response to a user acceptance action on the driver input device (in step 100, the driver activates the pulling out function by selecting a parking menu on the display screen in the center console by actuating a parking button, selecting the pulling out-side, and releasing the brake pedal; Fig. 1; [0046]; the automated parking maneuver begins in step 110 with a linear reversing move 10; for this purpose the reverse gear is engaged by the parking assistance system and the vehicle is accelerated and brought to a standstill in front of the rear vehicle; Fig. 1; [0049]).

Claim 6 lacks an inventive step under PCT Article 33(3) as being obvious over US 2021/0269019 to Bayerische Motoren Werke Aktiengesellschaft in view of US 2013/0144492 to Takano et al. (hereinafter, "Takano").

Regarding Claim 6, Bayerische Motoren Werke Aktiengesellschaft discloses the motor vehicle of claim 1.

Box No. V **Reasoned statement under Rule 43*bis*.1(a)(i) with regard to novelty, inventive step and industrial applicability; citations and explanations supporting such statement**

Bayerische Motoren Werke Aktiengesellschaft fails to explicitly disclose wherein the controller is operable to offer an auto-shift only if steering angles in a limited prior period were greater than a selected threshold.

Takano teaches a parking mode selection apparatus for a vehicle (Takano; Abstract) wherein the controller is operable to offer an auto-shift only if steering angles in a limited prior period were greater than a selected threshold (when the steer angle is equal-to or smaller-than -30 degrees, it is judged whether or not the steer angle is equal to smaller than -60 degrees; when the steer angle is larger than -60 degrees it is judged that a left-side perpendicular parking is selected; Fig. 7; [0062-0063]; a left-side perpendicular parking includes a run forward on the right and then run backward to park perpendicularly on the left side; Para. [0003]).

It would have been obvious to one of ordinary skill in the art before the priority date to modify Bayerische Motoren Werke Aktiengesellschaft with the steering angle features of Takano. The motivation for doing so would have been to allow judging of steering angles in order to determine selection of parking modes (Takano; [0065]), thereby improving operability and making parking target position easier to set (Takano; [0006]).

Claims 11-15 and 17-20 lack an inventive step under PCT Article 33(3) as being obvious over US 2021/0269019 to Bayerische Motoren Werke Aktiengesellschaft in view of US 2020/0207334 to Hyundai Motor Company et al. (hereinafter, "Hyundai Motor Company").

Regarding Claim 11, Bayerische Motoren Werke Aktiengesellschaft discloses a motor vehicle control system comprising: a central processor; a vehicle having a frame (a motor vehicle with an automated pulling out system; BMW; Abstract; it is inherent that a motor vehicle will have a frame) having wheels (wheels 5a and 5b; Fig. 2b; [0053]); a motor connected to the frame (it is inherent that a motor vehicle will have a frame and motor); a steering control connected to the wheels to establish a steering angle steerable wheels 5a and 5b are fully locked in the direction of the pulling-out side, and a forward move 20 can be carried out with full steering lock; Fig. 2b; [0053]); a vehicle controller operably connected to central processor, and to the steering control, to the motor, and to the wheels (the processor of a motor vehicle controller which has software for carrying out the method; Para. [0042]); the controller operable to selectably drive the wheels in a forward direction in a drive mode and in a rearward direction in a reverse mode (in step 100, the driver activates the pulling-out function, and at step 110 a linear reversing move is completed; Fig. 1; [0049]; after carrying out the initial reversing move, the steerable wheels 5a, and 5b are fully locked in the direction of the pulling out side, and an automatic switching of travel direction and forward move 20 is carried out; Fig. 2b; [0053]); and the vehicle controller (the processor of a motor vehicle controller which has software for carrying out the method; Para. [0042]) operable in response to gear changing information from the central controller to select a direction for driving the wheels, without operator indication of a direction (in step 100, the driver activates the pulling-out function, and at step 110 a linear reversing move is completed; Fig. 1; [0049]; after carrying out the initial reversing move, the steerable wheels 5a, and 5b are fully locked in the direction of the pulling out side, and an automatic switching of travel direction and forward move 20 is carried out; Fig. 2b; [0053]).

Bayerische Motoren Werke Aktiengesellschaft fails to explicitly disclose a fleet of multitudes of vehicles operably connected to the processor to transmit fleet driving and gear changing data to the processor; and the central processor operable based on the fleet driving and gear changing data to generate gear changing information.

Hyundai Motor Company teaches a system, method, infrastructure and vehicle for supporting automated valet parking (Hyundai Motor Co; Abstract), comprising a fleet of multitudes of vehicles (the infrastructure facility identifies a multitude of drivers and vehicles to determine whether the driver and the vehicle are qualified to park in the parking lot; Fig. 4A; [0055]) operably connected to the processor (the infrastructure facility; Fig. 4A; [0055]) to transmit fleet driving and gear changing data to the processor; and the central processor operable based on the fleet driving and gear changing data to generate gear changing information (when the vehicle proceeds to an autonomous parking step, the driving authority of the vehicle is delegates from the vehicle to the infrastructure facility; the driving authority means an

authority to drive and control vehicle operations such as steering, accelerating, braking, and gear shifting; Fig. 4A; [0055]).

It would have been obvious to one of ordinary skill in the art before the priority date to modify Bayerische Motoren Werke Aktiengesellschaft with the centralized fleet features of Hyundai Motor Company. The motivation for doing so would have been to allow a vehicle to autonomously park using established communications with an infrastructure facility; (Hyundai Motor Company; [0007]), thereby making vehicle parking safer and more convenient; (Hyundai Motor Company; [0004]).

Regarding Claim 12, modified Bayerische Motoren Werke Aktiengesellschaft discloses the motor vehicle control system of claim 11 wherein the vehicle controller is operable to change from reverse mode to drive mode without operation of a selector by a driver (after carrying out the initial reversing move, the steerable wheels 5a, and 5b are fully locked in the direction of the pulling out side, and an automatic switching of travel direction and forward move 20 is carried out; Fig. 2b; [0053]).

Regarding Claim 13, modified Bayerische Motoren Werke Aktiengesellschaft discloses the motor vehicle control system of claim 11 wherein the vehicle controller is operable while the vehicle is underway in one of the forward and reverse directions, and has stopped momentarily, to determine whether to remain in the same direction or to change direction (during the forward move 20 or immediately after the end of the forward move, it is checked in the query 130 whether the vehicle 1 could leave the parking space, if this is the case, after switching the travel direction and straightening the wheels 5a and 5b, the linear reversing move 30 is carried out; Fig. 2c; [0055-0056]).

Regarding Claim 14, modified Bayerische Motoren Werke Aktiengesellschaft discloses the motor vehicle control system of claim 11 wherein the fleet driving and gear changing data includes steering in a first direction, then steering in the opposite direction (a forward move 20 is carried out with full steering lock; Fig. 2b; [0053]; during the forward move 20 or immediately after the end of the forward move, it is checked in the query 130 whether the vehicle 1 could leave the parking space, if this is the case, after switching the travel direction and straightening the wheels 5a and 5b, the linear reversing move 30 is carried out; Fig. 2c; [0055-0056]).

Regarding Claim 15, modified Bayerische Motoren Werke Aktiengesellschaft discloses the motor vehicle control system of claim 11 wherein the vehicle controller is operable to offer an auto-shift in response to a prior pattern of fleet vehicle operation based on at least one of distance traveled, velocity profile, and steering angle profile (in step 100, the driver activates the pulling-out function by selecting a parking menu on the display screen; Fig. 1; [0046]; the first move does not necessarily have to be a linear reversing move but rather instead a steered forward move can be selected as the first move; in dependence on the distances to the front boundary vehicle 2 and to the rear boundary vehicle 3; Fig. 1; [0050]).

Regarding Claim 17, modified Bayerische Motoren Werke Aktiengesellschaft discloses the motor vehicle control system of claim 11 wherein the prior pattern of fleet vehicle operation includes if fleet vehicle velocities were less than a selected threshold (a forward move 20 is carried out with full steering lock; Fig. 2b; [0053]; during the forward move 20 or immediately after the end of the forward move, it is checked in the query 130 whether the vehicle 1 could leave the parking space, if this is the case, after switching the travel direction and straightening the wheels 5a and 5b, the linear reversing move 30 is carried out; Fig. 2c; [0055-0056]; the vehicle comes to a stop before any change in direction).

Regarding Claim 18, modified Bayerische Motoren Werke Aktiengesellschaft discloses the motor vehicle control system of claim 11 wherein the prior pattern of fleet vehicle operation includes if fleet vehicle distance traveled is less than a selected threshold (the first move does not necessarily have to be a linear reversing move but rather instead a steered forward movement; if there is very small distance to the rear vehicle 3 before beginning the parking maneuver and greater distance to the front vehicle 2, a steered forward movement may be selected; Fig. 1; [0050]; a steered forward movement includes fully locked wheels in the direction of a pull-out side and an automatic switching of the travel direction; Fig. 2b; [0053]).

Box No. V **Reasoned statement under Rule 43*bis*.1(a)(i) with regard to novelty, inventive step and industrial applicability; citations and explanations supporting such statement**

Regarding Claim 19, modified Bayerische Motoren Werke Aktiengesellschaft discloses the motor vehicle control system of claim 11 wherein the prior pattern of fleet vehicle operation includes if, for fleet vehicles, a first limited distance associated with vehicle length was covered with a steering angle less than a first threshold (the automated parking maneuver begins in step 110 with a linear reversing move 10 in parallel to the curbstone 4, wherein the vehicle is moved back until it reaches or falls below a specific threshold value for the distance to the rear vehicle 3; Fig. 1; [0049]), and a second distance was traveled with a steering angle greater than a second selected threshold and in a first direction, and the vehicle subsequently stops, and the steering angle is adjusted to a second direction opposite the first direction (Fig. 2b illustrates the situation after carrying out the initial reversing move; steerable wheels 5a and 5b are now fully locked in the direction of the pulling-out side and after switching the travel direction, a forward move 20 is carried out with full steering lock; Fig. 2b; [0053-0055]).

Regarding Claim 20, modified Bayerische Motoren Werke Aktiengesellschaft discloses the motor vehicle control system of claim 11 including a driver input device operably connected to the vehicle controller (a parking menu shown on a display screen in the center console; Fig. 1; [0046]), and wherein the vehicle controller is operable to offer an auto-shift and enact the auto shift in response to a user acceptance action on the driver input device (in step 100, the driver activates the pulling out function by selecting a parking menu on the display screen in the center console by actuating a parking button, selecting the pulling out-side, and releasing the brake pedal; Fig. 1; [0046]; the automated parking maneuver begins in step 110 with a linear reversing move 10; for this purpose the reverse gear is engaged by the parking assistance system and the vehicle is accelerated and brought to a standstill in front of the rear vehicle; Fig. 1; [0049]).

Claim 16 lacks an inventive step under PCT Article 33(3) as being obvious over US 2021/0269019 to Bayerische Motoren Werke Aktiengesellschaft in view of US 2020/0207334 to Hyundai Motor Company et al. (hereinafter, "Hyundai Motor Company") and US 2013/0144492 to Takano et al. (hereinafter, "Takano").

Regarding Claim 16, modified Bayerische Motoren Werke Aktiengesellschaft discloses the motor vehicle control system of claim 11.

Bayerische Motoren Werke Aktiengesellschaft fails to explicitly disclose wherein the prior pattern of fleet vehicle operation includes if fleet vehicle steering angles leading to a shift were greater than a selected threshold.

Takano teaches a parking mode selection apparatus for a vehicle (Takano; Abstract) wherein the prior pattern of fleet vehicle operation includes if fleet vehicle steering angles leading to a shift were greater than a selected threshold (when the steer angle is equal-to or smaller-than -30 degrees, it is judged whether or not the steer angle is equal to smaller than -60 degrees; when the steer angle is larger than -60 degrees it is judged that a left-side perpendicular parking is selected; Fig. 7; [0062-0063]; a left-side perpendicular parking includes a run forward on the right and then run backward to park perpendicularly on the left side; Para. [0003]).

It would have been obvious to one of ordinary skill in the art before the priority date to modify Bayerische Motoren Werke Aktiengesellschaft with the steering angle features of Takano. The motivation for doing so would have been to allow judging of steering angles in order to determine selection of parking modes (Takano; [0065]), thereby improving operability and making parking target position easier to set (Takano; [0006]).

Claims 1-20 meet the criteria set out in PCT Article 33(4), and thus have industrial applicability because the subject matter claimed can be made or used in industry.

Supplemental Box

In case **the space in any of the preceding boxes is not sufficient.**

Continuation of IPC: ***B60W 10/04*** (2024.01); ***B60W 10/18*** (2024.01); ***B60W 10/20*** (2024.01); ***B60W 30/06*** (2024.01); *B60W 50/10* (2024.01)

Search History:

Limited Classification Search

The Patent Analyst performed a limited classification search within the following US, IPC, CPC, ECLA, or F-Term classification areas:

CPC Class/Subclass(es): B60W 10/04; B60W 10/18; B60W 10/20; B60W 30/06; B60W 50/10 (202401)

IPC (8) Class/Subclass(es): B60W 10/04; B60W 10/18; B60W 10/20; B60W 30/06; B60W 50/10 (202401)

U.S. Class/Subclass(es): 74/335; 477/34; 701/51; 701/60

See Global Search Results.

Global Patent Literature Text Search

The Patent Analyst performed the following global text search, which was not limited by classification but may or may not have been limited by other criteria:

Questel Orbit: https://www.orbit.com

#	Search query	Results
1	**((LANGLOTZ 2D BENNET)/IN/OIN/INH/INV)**	**14**
2	((PD < 2023-06-05) OR (PD = 2023-06-05))	81603836
3	**1 AND 2**	**11**
4	**"BULLETPROOF PROPERTY MAN"/FPAN**	**1**
5	**"BULLETPROOF PROPERTY MANAGEMENT"/FPAN**	**7**
6	(((AUTOMAT+)/TI/AB/TX AND (SHIFT)/TI/AB/TX AND (STEERING 1W ANGLE)/TI/AB/TX) AND ((PD < 2023-06-05) OR (PD = 2023-06-05)))	24192
7	(((AUTOMAT+)/TI/AB/TX AND (SHIFT)/TI/AB/TX AND (DISTANCE)/TI/AB/TX AND (HISTORY)/TI/AB/TX AND (PREVIOUS)/TI/AB/TX) AND ((PD < 2023-06-05) OR (PD = 2023-06-05)))	48320
8	(((AUTOMAT+)/TI/AB/TX AND (SHIFT)/TI/AB/TX AND (DISTANCE)/TI/AB/TX AND (HISTORY)/TI/AB/TX AND (PREVIOUS)/TI/AB/TX AND (TRANSMISSION)/TI/AB/TX) AND ((PD < 2023-06-05) OR (PD = 2023-06-05)))	38693
9	(((AUTOMAT+)/TI/AB/TX AND (SHIFT)/TI/AB/TX AND (DISTANCE)/TI/AB/TX AND (HISTORY)/TI/AB/TX AND (PREVIOUS)/TI/AB/TX AND (TRANSMISSION)/TI/AB/TX AND (STEERING 1W ANGLE)/TI/AB/TX) AND ((PD < 2023-06-05) OR (PD = 2023-06-05)))	894
10	((TRANSMISSION)/TI/AB/TX AND (SHIFT)/TI/AB/TX AND (HISTORY)/TI/AB/TX AND (DISTANCE)/TI/AB/TX AND (DRIVE OR FORWARD)/TI/AB/TX AND (REVERSE OR BACKWARD)/TI/AB/TX)	39769
11	((TRANSMISSION)/TI/AB/TX AND (SHIFT)/TI/AB/TX AND (HISTORY)/TI/AB/TX AND (DISTANCE 1W	1445

	TRAVELED)/TI/AB/TX AND (DRIVE OR FORWARD)/TI/AB/TX AND (REVERSE OR BACKWARD)/TI/AB/TX)	
12	((TRANSMISSION)/TI/AB/TX AND (SHIFT)/TI/AB/TX AND (HISTORY)/TI/AB/TX AND (DISTANCE 1W TRAVELED)/TI/AB/TX AND (MEMORY OR REMEMBER)/TI/AB/TX AND (AUTOMATICALLY)/TI/AB/TX)	1771
13	((074335000)/PCL OR (475000000)/PCL OR (477034000)/PCL OR (701051000)/PCL OR (701060000)/PCL)	3606
14	((B60W-030/06)/CPC OR (B60W-010/18)/CPC OR (B60W-010/04)/CPC OR (B60W-010/20)/CPC OR (B60W-050/10)/CPC)	22749
15	((B60W-030/06)/IPC OR (B60W-010/18)/IPC OR (B60W-010/04)/IPC OR (B60W-010/20)/IPC OR (B60W-050/10)/IPC)	44264
16	**(US20210269019)/PN**	**1**
17	..CITBF NOSOURCE SS 16 1 RANKED	22
18	**(US20130144492)/PN**	**1**
19	..CITBF NOSOURCE SS 18 1 RANKED	78
20	**(US20200207334)/PN**	**1**
21	..CITBF NOSOURCE SS 20 1 RANKED	46
22	**(US20110080305)/PN**	**1**
23	..CITBF NOSOURCE SS 22 1 RANKED	55

Google Patents: https://patents.google.com

#	Search query	Results
1	automatic shifting "steering angle" parking	56340
2	"steering angle" "forward" "backward" "threshold"	16990
3	"steering angle" "drive" "reverse" shifter	13203
4	"steering angle" "forward" "backward" "threshold" "fleet"	263

Computer Accessed Text Databases Searched

The Patent Analyst searched the following computer accessed text databases:

Google Scholar: https://scholar.google.com/

#	Search query	Results
1	automatic parking shift transmission	54700
2	automatic parking shift transmission "steering angle"	3700
3	automatic parking shift transmission "steering angle" "threshold"	1740
4	automatic parking shift transmission "steering angle" "threshold" "fleet"	309

Date search was completed: 26 April 2024

DT/AK

VEHICLE GEAR SELECTION CONTROL

Cross-Reference to Related Application

[0001] This application is a Continuation of U.S. Patent Application Number 18/403,221 filed on January 3, 2024, entitled "VEHICLE GEAR SELECTION CONTROL," which is a Continuation-in-Part of U.S. Patent Application Number 18/205,823 filed on June 5, 2023 now issued as U.S. Patent Number 11,932,230, entitled "VEHICLE GEAR SELECTION CONTROL," which are hereby incorporated by reference in its entirety for all that is taught and disclosed therein.

Field of the Invention

[0002] The present invention relates to motor vehicles and operational control systems.

Background and Summary

[0003] Traditional motor vehicles have gear selection controls using a lever or physical buttons. Modern vehicles may employ computer touchscreen control, such as swiping up on the left edge of the screen to go forward and down to go in reverse. All these controls have a direction or element associated with each direction, and the driver indicates by the control operation which direction is desired.

[0004] In contrast, some vehicles have advanced gear or direction selection is special circumstances. Some may select a direction automatically when initially proceeding from a parked condition. Vehicle vision of other sensors may detect a circumstance in which there is an obstacle such as a wall in one direction and only one apparent direction to proceed. The system may then offer the driver that proposed direction, and the driver then for safety reasons indicates (such as by a tap on the brake) that the proposed direction is safe and correct.

[0005] It is notable that the driver confirmation of the direction is provided by a control input that conveys no direction information and is the same input regardless of direction proposed. The switch is a simple binary switch, without multiple positions as in a traditional shift stalk, or different directions to swipe such as on a touch screen interface.

In this version, the only input from the driver is acceptance, unless the driver disagrees and inputs the other direction with the usual input selection interface.

[0006] It is further noted that the automated vehicle-proposed direction system is limited to starting from a stopped condition, when the vehicle initially is not in gear or being operated. Parking spaces normally may have obstacles on one direction opposite the direction of entry. The existing system is unsuitable for gear changes while underway and operating the vehicle, which are rare except when encountering unexpected obstacles and in routine parking and unparking maneuvers, in which case the user selection of direction is always indicated deliberately each time.

[0007] While effective, these gear direction systems may have disadvantages, or have an opportunity for automation to provide convenience. This especially occurs during routine parking when backing out of a parking space, stopping, then selecting the forward drive direction. This may be the only frequent need for a screen swipe to indicate direction in vehicles with sensor initial direction proposals. The screen swipe may be a distraction, require visual observation to reach a small area, and may be a non-intuitive direction for some users. The distractions may arise when in a parking lot context when traffic may come from different direction, when other drivers may have distracted attention, and in which pedestrians and obstacles may be present.

[0008] Accordingly, there is a need for a motor vehicle having a frame with wheels and a motor connected to the frame. A steering control is connected to the wheels to establish a steering angle. A controller is operably connected to the steering control, to the motor, and to the wheels, and is operable to selectably drive the wheels in a forward direction in a drive mode and in a rearward direction in a reverse mode. The controller is operable to select a direction for driving the wheels in response to a pattern of steering angle movements, without operator indication of a direction.

Brief Description of the Drawings

[0009] Figure 1 shows a schematic depiction of a vehicle according to a preferred embodiment of the invention.

[0010] Figure 2 shows a chart depicting vehicle operation in a selected maneuver.

[0011] Figure 3 shows a system including a network of vehicles training a central controller.

Detailed Description of a Preferred Embodiment

[0012] As shown schematically in Figure 1, the system operates in a vehicle 10 having a frame or body 12 having wheels 14 that are driven by a motor 16. Brakes 20 are associated with each wheel and a brake cylinder 22 operates the brakes. A steering system 24 steers the front wheels.

[0013] A computer or controller 30 is connected to each of the above systems, including sensors to monitor operation of each system, and cameras or other sensors (not shown) that gather information about the vehicle's environment to enable autonomous or assisted driving. A passenger compartment includes a touchscreen display 32 connected to the controller and visible to a driver 34 and passenger 36 each occupying seats in the compartment. The display provides data entry capability and the controller also connects to audio speakers and microphones in the compartment for sending and receiving audio information with the occupants.

[0014] At the driver's side of the display near the left edge as shown, a vertical bar 38 may be displayed to provide a gear shift control. An upward swipe indicates a selection of forward travel in "drive" gear, and downward swipe indicates "reverse" for driving rearward for backing up.

[0015] Vehicle controls include a steering wheel or yoke 40 that is connected to the controller and may in some instances be selectably mechanically connected to the steering system 24 to enable direct mechanical control by the driver, electronic control by the driver via the controller, autonomous control by the controller with actuators or the mechanical connection moving the steering wheel in concert with the wheel angle, and combinations of these as selected or indicated by conditions. Similarly, an accelerator pedal 42 and brake pedal 44 are connected respectively to the motor 16, brake system 22, via the controller and optionally with some direct connection for driver and controller control over these functions.

[0016] The typical operation of the system is in the context of "unparking," when a driver backs out of a parking spot in reverse, steers to adjust direction while reversing, then shifts to drive, steers the other direction, then straightens out to proceed. This is most typically illustrated in perpendicular head-in parking lot parking, in which the parking space is

perpendicular to the aisle for the flow of traffic along the parking spots. An angled parking lot with parking spots indicated with a herringbone pattern of stripes has a similar pattern of operation, with gentler steering angles. Parallel parking has its own configuration. Residential garages and driveways are often like perpendicular parking, but there are many variations.

[0017] Each parking context has its own sequence of operations including steering angle and velocity profile. Parking operation normally takes place at slow speeds, so the operation and functions disclosed herein may be limited to circumstances below a selected speed, or within parameters of a function based in part on speed.

[0018] Figure 2 is a chart 100 that illustrates the sequence of unparking. The upper trace 110 indicates steering wheel angle on a time-based horizontal chart. The lower trace 120 indicates velocity. The lower images A-F depict the vehicle 130 in a parking space 132, and are located at their relative positions on the time axis. At position A, the vehicle is parked, with steering wheel straight, front wheels in line with the axis of the vehicle, and zero velocity. The vehicle maintains the steering wheel at zero steering angle as it accelerates to a slow speed to move straight rearward.

[0019] As it moves to the rear, position B indicates when the nose of the vehicle is clear of adjacent parked cars and may now be turned to a significant angle to enable the vehicle to curve with a tight radius due to presumed obstacles on the other side of the parking lot aisle 134 it is backing into.

[0020] The vehicle continues rearward through position C, with wheels turned sharply, then after it passes C and approaches an angle that enables forward departure past the adjacent vehicle that was to its left, the vehicle slows to a stop at D.

[0021] The wheel angle may begin reducing before D, but between D and E, the vehicle is briefly stopped, and the vehicle is manually shifted from reverse to drive as shown in the existing prior art screen swipe 136 or (in the case of the preferred embodiment) may be suggested by the vehicle based on presumptions discussed in detail below, and preferably confirmed by the driver by an approval response such as a brake tap sequence 140 or other non-direction indicating signal such as a button click, voice command, or visually-detected gesture. During the stopped D-E period, the wheel is turned sharply from one direction away from straight, back past straight, and to the opposite direction to clear the

adjacent vehicle as it proceeds forward.

[0022] Beyond E, the vehicle drives forward at increasing speeds that are above a threshold normally reserved for parking operations and higher for parking lot transit, or roadways that may serve as the "aisle."

[0023] An important concern for the preferred embodiment is in which limited circumstances to have the controller enable auto-shifting, and to propose or enact a shift in direction without user indication of the direction, and preferably with only an indication of approval.

[0024] The controller may be programmed with specific functions or algorithms as to when an auto-shift is clearly safe to offer or enact, and when if offered, acceptance by the driver is likely desired and not an unwanted distraction. The controller may be programmed by artificial intelligence data derived from multitudes of parking lot navigations to determine actual patterns when auto-shifting might be safely offered, avoiding simpler criteria and functions as offered below for simplicity. However, if the disclosed functions are based on wheel angle patterns, velocity patterns, with certain thresholds of their various amounts, derivatives, and integrals, it is believed that typical drivers will naturally be following certain functions of the same parameters, and AI systems would simply derive the rules from typical driver behavior. In such embodiments the driver may be offered an auto-shift (or an auto shift implemented without consent) only when the likelihood of it being desired is greater than a preselected threshold, and when other safety criteria are met.

[0025] Figure 3 shows an AI system 200 employing these principles. The system operates with a network or fleet 210 of a multitude of vehicles operating normally by private owners to train a central system 220 with immense processing ability to receive and analyze the video and input data from the fleet. The central system may be otherwise occupied to gather driving data to provide all other aspects of self-driving or autonomous vehicle operation. The fleet vehicles may be selected or curated as superior or model drivers. The fleet vehicle behavior when naturally engaging in gear changing (typically Reverse to Drive) is recorded over multitudes of cases, including edge cases with unusual circumstances. The recorded behavior data may be video streams from vehicle cameras, and vehicle control inputs such as steering angle, accelerator and brake usage, and gear

changing inputs. From these interactions, the central system learns the patterns and combinations of inputs that suggest with a selected degree of confidence that a gear change is desired, and should be enacted or offered for the user driver ratification. The user driver vehicle processor employs the network-learned behavior patterns without necessarily having preprogrammed algorithms or rules for the conditions (ranges of velocities, accelerations, durations, or angles, etc.) suggesting a gear change is desired. The system simply refers to the mass of fleet behavioral data to find confident commonalities of circumstances.

[0026] One criterion is vehicle speed. Obviously, the shifting is offered only for when the vehicle is essentially stationary or at near zero speed. But the speed prior to this, when departing the parking spot between positions B and C, may be pertinent to the question of whether the vehicle is intentionally unparking. The function may be based on maximum speed, or an average speed over a certain distance. Above a certain speed, auto shift would never be offered, and even speeds that might be common but not ideal for unparking might not receive an auto-shift offer. This would serve to train cautious driver behavior, especially if the entity determining the thresholds were associated with vehicle insurance liability.

[0027] Another criterion is steering angle. Large steering angles are associated with slower speeds, and only slight angles are used at high speeds. But beyond speed alone, steering angles are larger for unparking. While a capacious parking lot with wide aisles might not require as sharp steering angles, they may still follow clear patterns to offer auto-shift.

[0028] Position is another element. Velocity and steering angle thresholds may be adequate, but more details patterns will tend to be associated with unparking. As shown, the vehicle proceeds for about one car length from A to B before introducing steering angle. It then proceeds for another limited distance related to conditions and vehicle length with a substantial steering angle.

[0029] Speed, steering angle, and position may be determined by sensors on the vehicle, or may be calculated or inferred by other sources, including vehicle cameras or vision systems that create a model of the environment and the vehicle's relationship to it, and GPS and other sensors.

[0030] Reversing the steering angle when slowing or after stopping is the final signal preferably

to verify the appropriateness of an auto-shift offer.

[0031] Errors of enacted shifts are intolerable as they may cause accidents, so approval preferably needs to be indicated before an offered shift is enacted. Approval may be withheld in cases in which the driver may reverse for a time, give some indications of unparking, then proceed farther to the rear. The system should assess whether the vehicle has backed out enough and to a suitable angle to enable departure without conflict, so that if inadequately backed out, a premature auto-shift offer is not made.

[0032] Approval may be indicated in a wide range of ways. With the driver's foot on the brake for slowing to a stop after reversing, brake operation is one option. After stopping, the driver might release and tap the brake to accept the shift. With many vehicles offering one-pedal driving, and slowing automatically as the accelerator pedal is released, the driver's foot might shift over to tap the brake.

[0033] Acceptance can be indicated by clicking any button, operating any control, tapping the screen (but without needing to indicate a direction as the vehicle has offered the direction and no indication is needed). Voice consent may be provided, and a driver may gesture to accept, such as by a head nod indicating approved forward movement, as recognized by a cabin camera viewing the driver. Vehicles with scroll buttons on opposite sides of the steering wheel accessible to thumbs are well suited to serve as consent input, such as by clicking both wheels simultaneously.

[0034] Unparking from angled spaces on a street curb or a parking lot with aisles will be similar, and have some differences due to different geometries. For instance, steering angles will differ, and velocities may be necessarily brisker when pulling into a roadway to clear traffic. Auto-shifting may reduce exposer to traffic and enable safe unparking with smaller traffic gaps by reducing the D-E time period that would be taken enacting a manual shift, with the attendant distraction.

[0035] Unparking from parallel parking is more complex and has its own patterns, but the system could learn or implement these patterns. Parallel parking is much like backing into a perpendicular parking spot, in that the driver begins by going past an open parking spot, should have signaled, and then backs up into the spot. This is potentially challenging because one normally doesn't shift to reverse upon simply pausing in a parking lot or a city street with parallel spaces beside. But in special detected

circumstances the auto- shift can be proposed by the system. Based on sensing an available spot, preferably in the context of a known arrival at a navigated destination, optionally based on turn signal actuation to indicate a desire to park in a detected available space at the destination. Auto-park offering may be limited only when navigating and having arrived at a programmed destination.

[0036] In some embodiments, the system may be trained based on location, with the vehicle controller having a GPS system that identities the vehicle location. This may be employed to provide confident suggestions of auto shift at a frequent location (such as home and packing out of a garage or driveway before turning and shifting into drive) where the vehicle follows the same pattern essentially every time. "Always shift here" is a useful command to enable to driver to ensure that a shift is suggested. In certain circumstances, the shift may even be optionally made automatically without requiring driver approval. Locations other than home (such as work, or any place frequented) may be used to offer an auto-shift option by the vehicle prompting the user to ask whether they want to always auto shift at that location.

[0037] Some systems may gain enough information about whether to offer auto-shift upon initial arrival at a parking space, based on the images collected by the vehicle vision system as it approaches and enters the parking space. It may be unnecessary to gather more info by the vehicle's operation upon exiting the spot as is proposed above.

[0038] Other systems may simply employ distance traveled information, offering an auto-shift any time a vehicle reverses and stops within a selected distance typical for such parking lots (such as 2-3 car lengths). This would avoid offering an auto shift upon vehicle stoppage such as might occur to yield to cross traffic when having reversed less than a car length, although an offer of auto-shift may be ignored.

[0039] The system may also employ vehicle location data from GPS or geofence and enable or disable the auto-shift based on location. The feature may be limited to a user's home where the driving action is consistent every day, and disabled in public parking lots. It may be enabled at "favorite" locations where there may be consistency or other basis for driver confidence or need for convenience. This may be treated like suspension adjustments that are enabled at certain locations and may be offered as a "do you want to auto-shift at this location in the future?" prompt.

Claims

1. A motor vehicle comprising:
   a frame having wheels;
   a motor connected to the frame;
   a steering control connected to the wheels to establish a steering angle;
   a brake control connected to the wheels;
   a drive system operably connected to the steering control, to the motor, and to the brake control;
   the drive system operable to selectably drive the wheels in a forward direction in a drive mode and in a rearward direction in a reverse mode; and
   the drive system operable in response to a sequence of detected steering and brake inputs when in a first one of the drive mode and reverse mode to change to the other of the drive mode and reverse mode, without operator indication of a direction.

2. The motor vehicle of claim 1 wherein the sequence of detected steering and brake inputs includes detecting a steering angle in one direction while driving the vehicle in the first one of the drive mode and reverse mode, and detecting a steering angle in a second direction opposite the first direction while driving the vehicle in the other of the drive mode and reverse mode.

3. The motor vehicle of claim 2 wherein the sequence of detected steering and brake inputs includes detecting a brake application.

4. The motor vehicle of claim 3 wherein the brake application is a brake tap.

5. The motor vehicle of claim 1 wherein the sequence of detected steering and brake inputs includes:
   detecting driving in a first direction with the steering control turned in a first direction,
   detecting application of the brake control, and
   detecting turning the steering control in a direction opposite the first direction.

6. The motor vehicle of claim 1 wherein the sequence of detected steering and brake inputs includes while the vehicle is in a stopped condition, detecting turning the steering control in a direction opposite the first direction.

7. The motor vehicle of claim 1 wherein the sequence of detected steering and brake inputs includes detecting releasing the accelerator pedal when driving in the first direction to slow the vehicle to a stop without driver application of force to the brake control, and then applying force to the brake control.

8. A motor vehicle comprising:
   a frame having wheels;
   a motor connected to the frame;
   a steering control connected to the wheels to establish a steering angle;
   a brake control connected to the wheels;
   a controller operably connected to the steering control, to the motor, and to the brake control;
   the controller operable to selectably drive the wheels in a forward direction in a drive mode and in a rearward direction in a reverse mode; and
   the controller operable in response to a sequence of detected steering and brake inputs when in a first one of the drive mode and reverse mode to change to the other of the drive mode and reverse mode, without operator indication of a direction.

9. The motor vehicle of claim 8 wherein the sequence of detected steering and brake inputs includes detecting a steering angle in one direction while driving the vehicle in the first one of the drive mode and reverse mode, and detecting a steering angle in a second direction opposite the first direction while driving the vehicle in the other of the drive mode and reverse mode.

10. The motor vehicle of claim 9 wherein the sequence of detected steering and brake inputs includes detecting a brake application.

11. The motor vehicle of claim 10 wherein the brake application is a brake tap.

12. The motor vehicle of claim 8 wherein the sequence of detected steering and brake inputs includes:

detecting driving in a first direction with the steering control turned in a first direction,

detecting application of the brake control, and

detecting turning the steering control in a direction opposite the first direction.

13. The motor vehicle of claim 12 wherein the sequence of detected steering and brake inputs includes while the vehicle is in a stopped condition, detecting turning the steering control in a direction opposite the first direction.

14. The motor vehicle of claim 8 wherein the sequence of detected steering and brake inputs includes detecting releasing the accelerator pedal when driving in the first direction to slow the vehicle to a stop without driver application of force to the brake control, and then applying force to the brake control.

VEHICLE GEAR SELECTION CONTROL

Abstract of the Disclosure

A motor vehicle for operation by a driver has a frame with wheels and a motor connected to the frame. A steering control is connected to the wheels to establish a steering angle.
A controller is operably connected to the steering control, to the motor, and to the wheels, and is operable to selectably drive the wheels in a forward direction in a drive mode and in a rearward direction in a reverse mode. The controller is operable to select a direction for driving the wheels in response to a pattern of steering angle movements, without operator indication of a direction.

CERTIFICATION AND REQUEST FOR PRIORITIZED EXAMINATION UNDER 37 CFR 1.102(e) (Page 1 of 1)

First Named Inventor:	Bennet Langlotz	Nonprovisional Application Number (if known):	
Title of Invention:	VEHICLE GEAR SELECTION CONTROL		

APPLICANT HEREBY CERTIFIES THE FOLLOWING AND REQUESTS PRIORITIZED EXAMINATION FOR THE ABOVE-IDENTIFIED APPLICATION.

1. The processing fee set forth in 37 CFR 1.17(i)(1) and the prioritized examination fee set forth in 37 CFR 1.17(c) have been filed with the request. The publication fee requirement is met because that fee, set forth in 37 CFR 1.18(d), is currently $0. The basic filing fee, search fee, and examination fee are filed with the request or have been already been paid. I understand that any required excess claims fees or application size fee must be paid for the application.

2. I understand that the application may not contain, or be amended to contain, more than four independent claims, more than thirty total claims, or any multiple dependent claims, and that any request for an extension of time will cause an outstanding Track I request to be dismissed.

3. The applicable box is checked below:

I. ☑ Original Application (Track One) - Prioritized Examination under § 1.102(e)(1)

i. (a) The application is an original nonprovisional utility application filed under 35 U.S.C. 111(a). This certification and request is being filed with the utility application via EFS-Web.

---OR---

(b) The application is an original nonprovisional plant application filed under 35 U.S.C. 111(a). This certification and request is being filed with the plant application in paper.

ii. An executed inventor's oath or declaration under 37 CFR 1.63 or 37 CFR 1.64 for each inventor, **or** the application data sheet meeting the conditions specified in 37 CFR 1.53(f)(3)(i) is filed with the application.

II. ☐ Request for Continued Examination - Prioritized Examination under § 1.102(e)(2)

i. A request for continued examination has been filed with, or prior to, this form.
ii. If the application is a utility application, this certification and request is being filed via EFS-Web.
iii. The application is an original nonprovisional utility application filed under 35 U.S.C. 111(a), or is a national stage entry under 35 U.S.C. 371.
iv. This certification and request is being filed prior to the mailing of a first Office action responsive to the request for continued examination.
v. No prior request for continued examination has been granted prioritized examination status under 37 CFR 1.102(e)(2).

Signature /bennet langlotz/	Date 10-27-2024
Name (Print/Typed) Bennet Langlotz	Practitioner Registration Number 35928

Note: *This form must be signed in accordance with 37 CFR 1.33. See 37 CFR 1.4(d) for signature requirements and certifications. Submit multiple forms if more than one signature is required.**

☐ *Total of _____ forms are submitted.

Privacy Act Statement

The **Privacy Act of 1974 (P.L. 93-579)** requires that you be given certain information in connection with your submission of the attached form related to a patent application or patent. Accordingly, pursuant to the requirements of the Act, please be advised that: (1) the general authority for the collection of this information is 35 U.S.C. 2(b)(2); (2) furnishing of the information solicited is voluntary; and (3) the principal purpose for which the information is used by the U.S. Patent and Trademark Office is to process and/or examine your submission related to a patent application or patent. If you do not furnish the requested information, the U.S. Patent and Trademark Office may not be able to process and/or examine your submission, which may result in termination of proceedings or abandonment of the application or expiration of the patent.

The information provided by you in this form will be subject to the following routine uses:

1. The information on this form will be treated confidentially to the extent allowed under the Freedom of Information Act (5 U.S.C. 552) and the Privacy Act (5 U.S.C 552a). Records from this system of records may be disclosed to the Department of Justice to determine whether disclosure of these records is required by the Freedom of Information Act.
2. A record from this system of records may be disclosed, as a routine use, in the course of presenting evidence to a court, magistrate, or administrative tribunal, including disclosures to opposing counsel in the course of settlement negotiations.
3. A record in this system of records may be disclosed, as a routine use, to a Member of Congress submitting a request involving an individual, to whom the record pertains, when the individual has requested assistance from the Member with respect to the subject matter of the record.
4. A record in this system of records may be disclosed, as a routine use, to a contractor of the Agency having need for the information in order to perform a contract. Recipients of information shall be required to comply with the requirements of the Privacy Act of 1974, as amended, pursuant to 5 U.S.C. 552a(m).
5. A record related to an International Application filed under the Patent Cooperation Treaty in this system of records may be disclosed, as a routine use, to the International Bureau of the World Intellectual Property Organization, pursuant to the Patent Cooperation Treaty.
6. A record in this system of records may be disclosed, as a routine use, to another federal agency for purposes of National Security review (35 U.S.C. 181) and for review pursuant to the Atomic Energy Act (42 U.S.C. 218(c)).
7. A record from this system of records may be disclosed, as a routine use, to the Administrator, General Services, or his/her designee, during an inspection of records conducted by GSA as part of that agency's responsibility to recommend improvements in records management practices and programs, under authority of 44 U.S.C. 2904 and 2906. Such disclosure shall be made in accordance with the GSA regulations governing inspection of records for this purpose, and any other relevant (*i.e.*, GSA or Commerce) directive. Such disclosure shall not be used to make determinations about individuals.
8. A record from this system of records may be disclosed, as a routine use, to the public after either publication of the application pursuant to 35 U.S.C. 122(b) or issuance of a patent pursuant to 35 U.S.C. 151. Further, a record may be disclosed, subject to the limitations of 37 CFR 1.14, as a routine use, to the public if the record was filed in an application which became abandoned or in which the proceedings were terminated and which application is referenced by either a published application, an application open to public inspection or an issued patent.
9. A record from this system of records may be disclosed, as a routine use, to a Federal, State, or local law enforcement agency, if the USPTO becomes aware of a violation or potential violation of law or regulation.

Under the Paperwork Reduction Act of 1995, no persons are required to respond to a collection of information unless it contains a valid OMB control number.

Application Data Sheet 37 CFR 1.76	Attorney Docket Number	BKL-11C5
	Application Number	
Title of Invention	VEHICLE GEAR SELECTION CONTROL	

The application data sheet is part of the provisional or nonprovisional application for which it is being submitted. The following form contains the bibliographic data arranged in a format specified by the United States Patent and Trademark Office as outlined in 37 CFR 1.76.
This document may be completed electronically and submitted to the Office in electronic format using the Electronic Filing System (EFS) or the document may be printed and included in a paper filed application.

Secrecy Order 37 CFR 5.2:

☐ Portions or all of the application associated with this Application Data Sheet may fall under a Secrecy Order pursuant to 37 CFR 5.2 (Paper filers only. Applications that fall under Secrecy Order may not be filed electronically.)

Inventor Information:

Inventor 1 Remove

Legal Name

Prefix	Given Name	Middle Name	Family Name	Suffix
	Bennet		Langlotz	

Residence Information (Select One) ◉ US Residency ○ Non US Residency ○ Active US Military Service

City	Dallas	State/Province	TX	Country of Residence	US

Mailing Address of Inventor:

Address 1	PO Box 660675 #37585		
Address 2			
City	Dallas	**State/Province**	TX
Postal Code	75266-0675	**Country**	US

All Inventors Must Be Listed - Additional Inventor Information blocks may be generated within this form by selecting the **Add** button. Add

Correspondence Information:

Enter either Customer Number or complete the Correspondence Information section below.
For further information see 37 CFR 1.33(a).

☐ **An Address is being provided for the correspondence Information of this application.**

Customer Number	25917		
Email Address	patent@langlotz.com	Add Email	Remove Email

Application Information:

Title of the Invention	VEHICLE GEAR SELECTION CONTROL		
Attorney Docket Number	BKL-11C5	**Small Entity Status Claimed**	☒
Application Type	Nonprovisional		
Subject Matter	Utility		
Total Number of Drawing Sheets (if any)	3	**Suggested Figure for Publication (if any)**	

Under the Paperwork Reduction Act of 1995, no persons are required to respond to a collection of information unless it contains a valid OMB control number.

Application Data Sheet 37 CFR 1.76	Attorney Docket Number	BKL-11C5
	Application Number	
Title of Invention	VEHICLE GEAR SELECTION CONTROL	

Filing By Reference:

Only complete this section when filing an application by reference under 35 U.S.C. 111(c) and 37 CFR 1.57(a). Do not complete this section if application papers including a specification and any drawings are being filed. Any domestic benefit or foreign priority information must be provided in the appropriate section(s) below (i.e., "Domestic Benefit/National Stage Information" and "Foreign Priority Information").

For the purposes of a filing date under 37 CFR 1.53(b), the description and any drawings of the present application are replaced by this reference to the previously filed application, subject to conditions and requirements of 37 CFR 1.57(a).

Application number of the previously filed application	Filing date (YYYY-MM-DD)	Intellectual Property Authority or Country

Publication Information:

☐ Request Early Publication (Fee required at time of Request 37 CFR 1.219)

☐ **Request Not to Publish.** I hereby request that the attached application not be published under 35 U.S.C. 122(b) and certify that the invention disclosed in the attached application **has not and will not** be the subject of an application filed in another country, or under a multilateral international agreement, that requires publication at eighteen months after filing.

Representative Information:

Representative information should be provided for all practitioners having a power of attorney in the application. Providing this information in the Application Data Sheet does not constitute a power of attorney in the application (see 37 CFR 1.32).
Either enter Customer Number or complete the Representative Name section below. If both sections are completed the customer Number will be used for the Representative Information during processing.

Please Select One:	◉ Customer Number	○ US Patent Practitioner	○ Limited Recognition (37 CFR 11.9)
Customer Number	25917		

Domestic Benefit/National Stage Information:

This section allows for the applicant to either claim benefit under 35 U.S.C. 119(e), 120, 121, 365(c), or 386(c) or indicate National Stage entry from a PCT application. Providing benefit claim information in the Application Data Sheet constitutes the specific reference required by 35 U.S.C. 119(e) or 120, and 37 CFR 1.78.
When referring to the current application, please leave the "Application Number" field blank.

Prior Application Status	Pending		Remove
Application Number	Continuity Type	Prior Application Number	Filing or 371(c) Date (YYYY-MM-DD)
	Continuation of	18403221	2024-01-03

Under the Paperwork Reduction Act of 1995, no persons are required to respond to a collection of information unless it contains a valid OMB control number.

Application Data Sheet 37 CFR 1.76	Attorney Docket Number	BKL-11C5
	Application Number	
Title of Invention	VEHICLE GEAR SELECTION CONTROL	

Prior Application Status	Patented				Remove
Application Number	Continuity Type	Prior Application Number	Filing Date (YYYY-MM-DD)	Patent Number	Issue Date (YYYY-MM-DD)
18403221	Continuation in part of	18205823	2023-06-05	11932230	2024-03-19
Additional Domestic Benefit/National Stage Data may be generated within this form by selecting the **Add** button.					Add

Foreign Priority Information:

This section allows for the applicant to claim priority to a foreign application. Providing this information in the application data sheet constitutes the claim for priority as required by 35 U.S.C. 119(b) and 37 CFR 1.55. When priority is claimed to a foreign application that is eligible for retrieval under the priority document exchange program (PDX)[i] the information will be used by the Office to automatically attempt retrieval pursuant to 37 CFR 1.55(i)(1) and (2). Under the PDX program, applicant bears the ultimate responsibility for ensuring that a copy of the foreign application is received by the Office from the participating foreign intellectual property office, or a certified copy of the foreign priority application is filed, within the time period specified in 37 CFR 1.55(g)(1).

Remove

Application Number	Country[i]	Filing Date (YYYY-MM-DD)	Access Code[i] (if applicable)

Additional Foreign Priority Data may be generated within this form by selecting the **Add** button. Add

Statement under 37 CFR 1.55 or 1.78 for AIA (First Inventor to File) Transition Applications

☐ This application (1) claims priority to or the benefit of an application filed before March 16, 2013 and (2) also contains, or contained at any time, a claim to a claimed invention that has an effective filing date on or after March 16, 2013.
NOTE: By providing this statement under 37 CFR 1.55 or 1.78, this application, with a filing date on or after March 16, 2013, will be examined under the first inventor to file provisions of the AIA.

Application Data Sheet 37 CFR 1.76	Attorney Docket Number	BKL-11C5
	Application Number	
Title of Invention	VEHICLE GEAR SELECTION CONTROL	

Authorization or Opt-Out of Authorization to Permit Access:

When this Application Data Sheet is properly signed and filed with the application, applicant has provided written authority to permit a participating foreign intellectual property (IP) office access to the instant application-as-filed (see paragraph A in subsection 1 below) and the European Patent Office (EPO) access to any search results from the instant application (see paragraph B in subsection 1 below).

Should applicant choose not to provide an authorization identified in subsection 1 below, applicant **must opt-out** of the authorization by checking the corresponding box A or B or both in subsection 2 below.

NOTE: This section of the Application Data Sheet is **ONLY** reviewed and processed with the **INITIAL** filing of an application. After the initial filing of an application, an Application Data Sheet cannot be used to provide or rescind authorization for access by a foreign IP office(s). Instead, Form PTO/SB/39 or PTO/SB/69 must be used as appropriate.

1. Authorization to Permit Access by a Foreign Intellectual Property Office(s)

A. Priority Document Exchange (PDX) - Unless box A in subsection 2 (opt-out of authorization) is checked, the undersigned hereby **grants the USPTO authority** to provide the European Patent Office (EPO), the Japan Patent Office (JPO), the Korean Intellectual Property Office (KIPO), the State Intellectual Property Office of the People's Republic of China (SIPO), the World Intellectual Property Organization (WIPO), and any other foreign intellectual property office participating with the USPTO in a bilateral or multilateral priority document exchange agreement in which a foreign application claiming priority to the instant patent application is filed, access to: (1) the instant patent application-as-filed and its related bibliographic data, (2) any foreign or domestic application to which priority or benefit is claimed by the instant application and its related bibliographic data, and (3) the date of filing of this Authorization. See 37 CFR 1.14(h)(1).

B. Search Results from U.S. Application to EPO - Unless box B in subsection 2 (opt-out of authorization) is checked, the undersigned hereby **grants the USPTO authority** to provide the EPO access to the bibliographic data and search results from the instant patent application when a European patent application claiming priority to the instant patent application is filed. See 37 CFR 1.14(h)(2).

The applicant is reminded that the EPO's Rule 141(1) EPC (European Patent Convention) requires applicants to submit a copy of search results from the instant application without delay in a European patent application that claims priority to the instant application.

2. Opt-Out of Authorizations to Permit Access by a Foreign Intellectual Property Office(s)

☐ A. Applicant **DOES NOT** authorize the USPTO to permit a participating foreign IP office access to the instant application-as-filed. If this box is checked, the USPTO will not be providing a participating foreign IP office with any documents and information identified in subsection 1A above.

☐ B. Applicant **DOES NOT** authorize the USPTO to transmit to the EPO any search results from the instant patent application. If this box is checked, the USPTO will not be providing the EPO with search results from the instant application.

NOTE: Once the application has published or is otherwise publicly available, the USPTO may provide access to the application in accordance with 37 CFR 1.14.

Application Data Sheet 37 CFR 1.76	Attorney Docket Number	BKL-11C5
	Application Number	
Title of Invention	VEHICLE GEAR SELECTION CONTROL	

Applicant Information:

Providing assignment information in this section does not substitute for compliance with any requirement of part 3 of Title 37 of CFR to have an assignment recorded by the Office.

Applicant 1 Remove

If the applicant is the inventor (or the remaining joint inventor or inventors under 37 CFR 1.45), this section should not be completed. The information to be provided in this section is the name and address of the legal representative who is the applicant under 37 CFR 1.43; or the name and address of the assignee, person to whom the inventor is under an obligation to assign the invention, or person who otherwise shows sufficient proprietary interest in the matter who is the applicant under 37 CFR 1.46. If the applicant is an applicant under 37 CFR 1.46 (assignee, person to whom the inventor is obligated to assign, or person who otherwise shows sufficient proprietary interest) together with one or more joint inventors, then the joint inventor or inventors who are also the applicant should be identified in this section. Clear

○ Assignee	○ Legal Representative under 35 U.S.C. 117	○ Joint Inventor
○ Person to whom the inventor is obligated to assign.	○ Person who shows sufficient proprietary interest	

If applicant is the legal representative, indicate the authority to file the patent application, the inventor is:

Name of the Deceased or Legally Incapacitated Inventor:

If the Applicant is an Organization check here. ☒

Organization Name	Bulletproof Property Management, LLC		
Mailing Address Information For Applicant:			
Address 1	1621 Central Avenue		
Address 2			
City	Cheyenne	**State/Province**	WY
Country	US	Postal Code	82001
Phone Number		Fax Number	
Email Address			

Additional Applicant Data may be generated within this form by selecting the Add button. Add

Assignee Information including Non-Applicant Assignee Information:

Providing assignment information in this section does not substitute for compliance with any requirement of part 3 of Title 37 of CFR to have an assignment recorded by the Office.

Under the Paperwork Reduction Act of 1995, no persons are required to respond to a collection of information unless it contains a valid OMB control number.

Application Data Sheet 37 CFR 1.76	Attorney Docket Number	BKL-11C5
	Application Number	
Title of Invention	VEHICLE GEAR SELECTION CONTROL	

Assignee 1

Complete this section if assignee information, including non-applicant assignee information, is desired to be included on the patent application publication. An assignee-applicant identified in the "Applicant Information" section will appear on the patent application publication as an applicant. For an assignee-applicant, complete this section only if identification as an assignee is also desired on the patent application publication.

Remove

If the Assignee or Non-Applicant Assignee is an Organization check here. ☒

Organization Name	Bulletproof Property Management, LLC

Mailing Address Information For Assignee including Non-Applicant Assignee:

Address 1	1621 Central Avenue		
Address 2			
City	Cheyenne	**State/Province**	WY
Country i	US	Postal Code	82001
Phone Number		Fax Number	
Email Address			

Additional Assignee or Non-Applicant Assignee Data may be generated within this form by selecting the Add button. Add

Signature:

Remove

NOTE: This Application Data Sheet must be signed in accordance with 37 CFR 1.33(b). **However, if this Application Data Sheet is submitted with the INITIAL filing of the application and either box A or B is not checked in subsection 2 of the "Authorization or Opt-Out of Authorization to Permit Access" section, then this form must also be signed in accordance with 37 CFR 1.14(c).**

This Application Data Sheet **must** be signed by a patent practitioner if one or more of the applicants is a **juristic entity** (e.g., corporation or association). If the applicant is two or more joint inventors, this form must be signed by a patent practitioner, **all** joint inventors who are the applicant, or one or more joint inventor-applicants who have been given power of attorney (e.g., see USPTO Form PTO/AIA/81) on behalf of **all** joint inventor-applicants.

See 37 CFR 1.4(d) for the manner of making signatures and certifications.

Signature	/bennet langlotz/			Date (YYYY-MM-DD)	2024-10-27
First Name	Bennet	Last Name	Langlotz	Registration Number	35928

Additional Signature may be generated within this form by selecting the Add button. Add

Application Data Sheet 37 CFR 1.76	Attorney Docket Number	BKL-11C5
	Application Number	
Title of Invention	VEHICLE GEAR SELECTION CONTROL	

This collection of information is required by 37 CFR 1.76. The information is required to obtain or retain a benefit by the public which is to file (and by the USPTO to process) an application. Confidentiality is governed by 35 U.S.C. 122 and 37 CFR 1.14. This collection is estimated to take 23 minutes to complete, including gathering, preparing, and submitting the completed application data sheet form to the USPTO. Time will vary depending upon the individual case. Any comments on the amount of time you require to complete this form and/or suggestions for reducing this burden, should be sent to the Chief Information Officer, U.S. Patent and Trademark Office, U.S. Department of Commerce, P.O. Box 1450, Alexandria, VA 22313-1450. DO NOT SEND FEES OR COMPLETED FORMS TO THIS ADDRESS. **SEND TO: Commissioner for Patents, P.O. Box 1450, Alexandria, VA 22313-1450.**

Privacy Act Statement

The Privacy Act of 1974 (P.L. 93-579) requires that you be given certain information in connection with your submission of the attached form related to a patent application or patent. Accordingly, pursuant to the requirements of the Act, please be advised that: (1) the general authority for the collection of this information is 35 U.S.C. 2(b)(2); (2) furnishing of the information solicited is voluntary; and (3) the principal purpose for which the information is used by the U.S. Patent and Trademark Office is to process and/or examine your submission related to a patent application or patent. If you do not furnish the requested information, the U.S. Patent and Trademark Office may not be able to process and/or examine your submission, which may result in termination of proceedings or abandonment of the application or expiration of the patent.

The information provided by you in this form will be subject to the following routine uses:

1 The information on this form will be treated confidentially to the extent allowed under the Freedom of Information Act (5 U.S.C. 552) and the Privacy Act (5 U.S.C. 552a). Records from this system of records may be disclosed to the Department of Justice to determine whether the Freedom of Information Act requires disclosure of these records.

2. A record from this system of records may be disclosed, as a routine use, in the course of presenting evidence to a court, magistrate, or administrative tribunal, including disclosures to opposing counsel in the course of settlement negotiations.

3 A record in this system of records may be disclosed, as a routine use, to a Member of Congress submitting a request involving an individual, to whom the record pertains, when the individual has requested assistance from the Member with respect to the subject matter of the record.

4. A record in this system of records may be disclosed, as a routine use, to a contractor of the Agency having need for the information in order to perform a contract. Recipients of information shall be required to comply with the requirements of the Privacy Act of 1974, as amended, pursuant to 5 U.S.C. 552a(m).

5. A record related to an International Application filed under the Patent Cooperation Treaty in this system of records may be disclosed, as a routine use, to the International Bureau of the World Intellectual Property Organization, pursuant to the Patent CooperationTreaty.

6. A record in this system of records may be disclosed, as a routine use, to another federal agency for purposes of National Security review (35 U.S.C. 181) and for review pursuant to the Atomic Energy Act (42 U.S.C. 218(c)).

7. A record from this system of records may be disclosed, as a routine use, to the Administrator, General Services, or his/her designee, during an inspection of records conducted by GSA as part of that agency's responsibility to recommend improvements in records management practices and programs, under authority of 44 U.S.C. 2904 and 2906. Such disclosure shall be made in accordance with the GSA regulations governing inspection of records for this purpose, and any other relevant (i.e., GSA or Commerce) directive. Such disclosure shall not be used to make determinations about individuals.

8. A record from this system of records may be disclosed, as a routine use, to the public after either publication of the application pursuant to 35 U.S.C. 122(b) or issuance of a patent pursuant to 35 U.S.C. 151. Further, a record may be disclosed, subject to the limitations of 37 CFR 1.14, as a routine use, to the public if the record was filed in an application which became abandoned or in which the proceedings were terminated and which application is referenced by either a published application, an application open to public inspections or an issued patent.

9. A record from this system of records may be disclosed, as a routine use, to a Federal, State, or local law enforcement agency, if the USPTO becomes aware of a violation or potential violation of law or regulation.

PTO/SB/08a (01-22)
Approved for use through 05/31/2024. OMB 0651-0031
U.S. Patent and Trademark Office; U.S. DEPARTMENT OF COMMERCE
Under the Paperwork Reduction Act of 1995, no persons are required to respond to a collection of information unless it contains a valid OMB control number.

INFORMATION DISCLOSURE STATEMENT BY APPLICANT (**Not for submission under 37 CFR 1.99)**	Application Number	
	Filing Date	
	First Named Inventor	Bennet Langlotz
	Art Unit	
	Examiner Name	
	Attorney Docket Number	BKL-11C5

U.S.PATENTS Remove						
Examiner Initial*	Cite No	Patent Number	Kind Code[1]	Issue Date	Name of Patentee or Applicant of cited Document	Pages,Columns,Lines where Relevant Passages or Relevant Figures Appear
	1					
If you wish to add additional U.S. Patent citation information please click the Add button. Add						

U.S.PATENT APPLICATION PUBLICATIONS Remove						
Examiner Initial*	Cite No	Publication Number	Kind Code[1]	Publication Date	Name of Patentee or Applicant of cited Document	Pages,Columns,Lines where Relevant Passages or Relevant Figures Appear
	1	20110080305		2011-04-07	Toledo et al.	
	2	20130144492		2013-06-06	Takano et al.	
	3	20200207334		2020-07-02	Cho	
	4	20210269019		2021-09-02	Chen et al.	
If you wish to add additional U.S. Published Application citation information please click the Add button. Add						

FOREIGN PATENT DOCUMENTS Remove								
Examiner Initial*	Cite No	Foreign Document Number[3]	Country Code[2] ¡	Kind Code[4]	Publication Date	Name of Patentee or Applicant of cited Document	Pages,Columns,Lines where Relevant Passages or Relevant Figures Appear	T[5]

INFORMATION DISCLOSURE STATEMENT BY APPLICANT (Not for submission under 37 CFR 1.99)	Application Number	
	Filing Date	
	First Named Inventor	Bennet Langlotz
	Art Unit	
	Examiner Name	
	Attorney Docket Number	BKL-11C5

	1							☐

If you wish to add additional Foreign Patent Document citation information please click the Add button Add

NON-PATENT LITERATURE DOCUMENTS Remove

Examiner Initials*	Cite No	Include name of the author (in CAPITAL LETTERS), title of the article (when appropriate), title of the item (book, magazine, journal, serial, symposium, catalog, etc), date, pages(s), volume-issue number(s), publisher, city and/or country where published.	T[5]
	1	CNET CARS, "Elon Musk explains Auto Shift feature in Model S," YouTube, https://www.youtube.com/watch?v=R4bskxzZvEA, June 11, 2021, Accessed March 25, 2024.	☐
	2	INTERNATIONAL SEARCHING AUTHORITY, "NOTIFICATION OF TRANSMITTAL OF THE INTERNATIONAL SEARCH REPORT AND THE WRITTEN OPINION OF THE INTERNATIONAL SEARCHING AUTHORITY, OR THE DECLARATION," Date of mailing: May 8, 2024, Date search was completed: April 26, 2024.	☐

If you wish to add additional non-patent literature document citation information please click the Add button Add

EXAMINER SIGNATURE

Examiner Signature		Date Considered	

*EXAMINER: Initial if reference considered, whether or not citation is in conformance with MPEP 609. Draw line through a citation if not in conformance and not considered. Include copy of this form with next communication to applicant.

[1] See Kind Codes of USPTO Patent Documents at www.USPTO.GOV or MPEP 901.04. [2] Enter office that issued the document, by the two-letter code (WIPO Standard ST.3). [3] For Japanese patent documents, the indication of the year of the reign of the Emperor must precede the serial number of the patent document. [4] Kind of document by the appropriate symbols as indicated on the document under WIPO Standard ST.16 if possible. [5] Applicant is to place a check mark here if English language translation is attached.

PC 6.1.24

INFORMATION DISCLOSURE STATEMENT BY APPLICANT (Not for submission under 37 CFR 1.99)	Application Number	
	Filing Date	
	First Named Inventor	Bennet Langlotz
	Art Unit	
	Examiner Name	
	Attorney Docket Number	BKL-11C5

CERTIFICATION STATEMENT

Please see 37 CFR 1.97(e) to make the appropriate selection(s):

☐ That each item of information contained in the information disclosure statement was first cited in any communication from a foreign patent office in a counterpart foreign application not more than three months prior to the filing of the information disclosure statement. See 37 CFR 1.97(e)(1).

OR

☐ That no item of information contained in the information disclosure statement was cited in a communication from a foreign patent office in a counterpart foreign application, and, to the knowledge of the person signing the certification after making reasonable inquiry, no item of information contained in the information disclosure statement was known to any individual designated in 37 CFR 1.56(c) more than three months prior to the filing of the information disclosure statement. See 37 CFR 1.97(e)(2).

☐ See attached certification statement.

☒ A certification statement is not submitted herewith.

FEE

☐ The fee set forth in 37 CFR 1.17 (p) has been submitted herewith.

COPIES

☐ An identification of an earlier application pursuant to 37 CFR 1.98 (d) (1) is attached.

SIGNATURE

A signature of the applicant or representative is required in accordance with CFR 1.33, 10.18. Please see CFR 1.4(d) for the form of the signature.

Signature	/bennet langlotz/	Date (YYYY-MM-DD)	2024-10-27
Name/Print	Bennet Langlotz	Registration Number	35928

This collection of information is required by 37 CFR 1.97 and 1.98. The information is required to obtain or retain a benefit by the public which is to file (and by the USPTO to process) an application. Confidentiality is governed by 35 U.S.C. 122 and 37 CFR 1.14. This collection is estimated to take 1 hour to complete, including gathering, preparing and submitting the completed application form to the USPTO. Time will vary depending upon the individual case. Any comments on the amount of time you require to complete this form and/or suggestions for reducing this burden, should be sent to the Chief Information Officer, U.S. Patent and Trademark Office, U.S. Department of Commerce, P.O. Box 1450, Alexandria, VA 22313-1450. DO NOT SEND FEES OR COMPLETED FORMS TO THIS ADDRESS. **SEND TO: Commissioner for Patents, P.O. Box 1450, Alexandria, VA 22313-1450.**

PC 6.1.24

Privacy Act Statement

The Privacy Act of 1974 (P.L. 93-579) requires that you be given certain information in connection with your submission of the attached form related to a patent application or patent. Accordingly, pursuant to the requirements of the Act, please be advised that: (1) the general authority for the collection of this information is 35 U.S.C. 2(b)(2); (2) furnishing of the information solicited is voluntary; and (3) the principal purpose for which the information is used by the U.S. Patent and Trademark Office is to process and/or examine your submission related to a patent application or patent. If you do not furnish the requested information, the U.S. Patent and Trademark Office may not be able to process and/or examine your submission, which may result in termination of proceedings or abandonment of the application or expiration of the patent.

The information provided by you in this form will be subject to the following routine uses:

1. The information on this form will be treated confidentially to the extent allowed under the Freedom of Information Act (5 U.S.C. 552) and the Privacy Act (5 U.S.C. 552a). Records from this system of records may be disclosed to the Department of Justice to determine whether the Freedom of Information Act requires disclosure of these record s.

2. A record from this system of records may be disclosed, as a routine use, in the course of presenting evidence to a court, magistrate, or administrative tribunal, including disclosures to opposing counsel in the course of settlement negotiations.

3. A record in this system of records may be disclosed, as a routine use, to a Member of Congress submitting a request involving an individual, to whom the record pertains, when the individual has requested assistance from the Member with respect to the subject matter of the record.

4. A record in this system of records may be disclosed, as a routine use, to a contractor of the Agency having need for the information in order to perform a contract. Recipients of information shall be required to comply with the requirements of the Privacy Act of 1974, as amended, pursuant to 5 U.S.C. 552a(m).

5. A record related to an International Application filed under the Patent Cooperation Treaty in this system of records may be disclosed, as a routine use, to the International Bureau of the World Intellectual Property Organization, pursuant to the Patent Cooperation Treaty.

6. A record in this system of records may be disclosed, as a routine use, to another federal agency for purposes of National Security review (35 U.S.C. 181) and for review pursuant to the Atomic Energy Act (42 U.S.C. 218(c)).

7. A record from this system of records may be disclosed, as a routine use, to the Administrator, General Services, or his/her designee, during an inspection of records conducted by GSA as part of that agency's responsibility to recommend improvements in records management practices and programs, under authority of 44 U.S.C. 2904 and 2906. Such disclosure shall be made in accordance with the GSA regulations governing inspection of records for this purpose, and any other relevant (i.e., GSA or Commerce) directive. Such disclosure shall not be used to make determinations about individuals.

8. A record from this system of records may be disclosed, as a routine use, to the public after either publication of the application pursuant to 35 U.S.C. 122(b) or issuance of a patent pursuant to 35 U.S.C. 151. Further, a record may be disclosed, subject to the limitations of 37 CFR 1.14, as a routine use, to the public if the record was filed in an application which became abandoned or in which the proceedings were terminated and which application is referenced by either a published application, an application open to public inspections or an issued patent.

9. A record from this system of records may be disclosed, as a routine use, to a Federal, State, or local law enforcement agency, if the USPTO becomes aware of a violation or potential violation of law or regulation.

PTO/AIA/80 (07-12)
Approved for use through 11/30/2014. OMB 0651-0035
U.S. Patent and Trademark Office; U.S DEPARTMENT OF COMMERCE
Under the Paperwork Reduction Act of 1995, no persons are required to respond to a collection of information unless it displays a valid OMB control number.

POWER OF ATTORNEY TO PROSECUTE APPLICATIONS BEFORE THE USPTO

I hereby revoke all previous powers of attorney given in the application identified in the attached statement under 37 CFR 3.73(c).

I hereby appoint:

■ Practitioners associated with Customer Number: 25917

OR

☐ Practitioner(s) named below (if more than ten patent practitioners are to be named, then a customer number must be used):

Name	Registration Number	Name	Registration Number

As attorney(s) or agent(s) to represent the undersigned before the United States Patent and Trademark Office (USPTO) in connection with any and all patent applications assigned only to the undersigned according to the USPTO assignment records or assignments documents attached to this form in accordance with 37 CFR 3.73(c).

Please change the correspondence address for the application identified in the attached statement under 37 CFR 3.73(c) to:

■ The address associated with Customer Number: 25917

OR

Firm or Individual Name			
Address			
City		State	Zip
Country			
Telephone		Email	

Assignee Name and Address: Bulletproof Property Management, LLC
1621 Central Avenue
Cheyenne, WY 82001

A copy of this form, together with a statement under 37 CFR 3.73(c) (Form PTO/AIA/96 or equivalent) is required to be Filed in each application in which this form is used. The statement under 37 CFR 3.73(c) may be completed by one of The practitioners appointed in this form, and must identify the application in which this Power of Attorney is to be filed.

SIGNATURE of Assignee of Record

The individual whose signature and title is supplied below is authorized to act on behalf of the assignee

Signature	/bennet langlotz/	Date	01/03/2024
Name	Bennet Langlotz	Telephone	
Title	Owner		

This collection of information is required by 37 CFR 1.31, 1.32 and 1.33. The information is required to obtain or retain a benefit by the public which is to file (and by the USPTO to process) an application. Confidentiality is governed by 35 U.S.C. 122 and 37 CFR 1.11 and 1.14. This collection is estimated to take 3 minutes to complete, including gathering, preparing, and submitting the completed application form to the USPTO. Time will vary depending upon the individual case. Any comments on the amount of time you require to complete this form and/or suggestions for reducing this burden, should be sent to the Chief Information Officer, U.S. Patent and Trademark Office, U.S. Department of Commerce, P.O. Box 1450, Alexandria, VA 22313-1450. DO NOT SEND FEES OR COMPLETED FORMS TO THIS ADDRESS. **SEND TO: Commissioner for Patents, P.O. Box 1450, Alexandria, VA 22313-1450.**

If you need assistance in completing the form, call 1-800-PTO-9199 and select option 2.

Privacy Act Statement

The **Privacy Act of 1974 (P.L. 93-579)** requires that you be given certain information in connection with your submission of the attached form related to a patent application or patent. Accordingly, pursuant to the requirements of the Act, please be advised that: (1) the general authority for the collection of this information is 35 U.S.C. 2(b)(2); (2) furnishing of the information solicited is voluntary; and (3) the principal purpose for which the information is used by the U.S. Patent and Trademark Office is to process and/or examine your submission related to a patent application or patent. If you do not furnish the requested information, the U.S. Patent and Trademark Office may not be able to process and/or examine your submission, which may result in termination of proceedings or abandonment of the application or expiration of the patent.

The information provided by you in this form will be subject to the following routine uses:

1. The information on this form will be treated confidentially to the extent allowed under the Freedom of Information Act (5 U.S.C. 552) and the Privacy Act (5 U.S.C 552a). Records from this system of records may be disclosed to the Department of Justice to determine whether disclosure of these records is required by the Freedom of Information Act.
2. A record from this system of records may be disclosed, as a routine use, in the course of presenting evidence to a court, magistrate, or administrative tribunal, including disclosures to opposing counsel in the course of settlement negotiations.
3. A record in this system of records may be disclosed, as a routine use, to a Member of Congress submitting a request involving an individual, to whom the record pertains, when the individual has requested assistance from the Member with respect to the subject matter of the record.
4. A record in this system of records may be disclosed, as a routine use, to a contractor of the Agency having need for the information in order to perform a contract. Recipients of information shall be required to comply with the requirements of the Privacy Act of 1974, as amended, pursuant to 5 U.S.C. 552a(m).
5. A record related to an International Application filed under the Patent Cooperation Treaty in this system of records may be disclosed, as a routine use, to the International Bureau of the World Intellectual Property Organization, pursuant to the Patent Cooperation Treaty.
6. A record in this system of records may be disclosed, as a routine use, to another federal agency for purposes of National Security review (35 U.S.C. 181) and for review pursuant to the Atomic Energy Act (42 U.S.C. 218(c)).
7. A record from this system of records may be disclosed, as a routine use, to the Administrator, General Services, or his/her designee, during an inspection of records conducted by GSA as part of that agency's responsibility to recommend improvements in records management practices and programs, under authority of 44 U.S.C. 2904 and 2906. Such disclosure shall be made in accordance with the GSA regulations governing inspection of records for this purpose, and any other relevant (*i.e.*, GSA or Commerce) directive. Such disclosure shall not be used to make determinations about individuals.
8. A record from this system of records may be disclosed, as a routine use, to the public after either publication of the application pursuant to 35 U.S.C. 122(b) or issuance of a patent pursuant to 35 U.S.C. 151. Further, a record may be disclosed, subject to the limitations of 37 CFR 1.14, as a routine use, to the public if the record was filed in an application which became abandoned or in which the proceedings were terminated and which application is referenced by either a published application, an application open to public inspection or an issued patent.
9. A record from this system of records may be disclosed, as a routine use, to a Federal, State, or local law enforcement agency, if the USPTO becomes aware of a violation or potential violation of law or regulation.

UNITED STATES
PATENT AND TRADEMARK OFFICE

P.O. Box 1450
Alexandria, VA 22313 - 1450
www.uspto.gov

ELECTRONIC PAYMENT RECEIPT

APPLICATION #	RECEIPT DATE / TIME	ATTORNEY DOCKET #
18/928,135	**10/27/2024 06:40:42 PM Z ET**	**BKL-11C5**

Title of Invention

VEHICLE GEAR SELECTION CONTROL

Application Information

APPLICATION TYPE	Utility - Nonprovisional Application under 35 USC 111(a)	PATENT #	-
CONFIRMATION #	1124	FILED BY	Russell Crawford
PATENT CENTER #	67734937	AUTHORIZED BY	Bennet Langlotz
CUSTOMER #	25917	FILING DATE	-
CORRESPONDENCE ADDRESS	-	FIRST NAMED INVENTOR	Bennet Langlotz

Payment Information

PAYMENT METHOD	PAYMENT TRANSACTION ID	PAYMENT AUTHORIZED BY
CARD / 2251	**E20240QI41347404**	**Russell Crawford**

PRE-AUTHORIZED ACCOUNT	PRE-AUTHORIZED CATEGORY
500493	**37 CFR 1.16 (National application filing, search, and examination fees); 37 CFR 1.17 (Patent application and reexamination processing fees); 37 CFR 1.19 (Document supply fees); 37 CFR 1.20 (Post Issuance fees); 37 CFR 1.21 (Miscellaneous fees and charges)**

FEE CODE	DESCRIPTION	ITEM PRICE($)	QUANTITY	ITEM TOTAL($)
2830	PROCESSING FEE, EXCEPT IN PROVISIONAL APPLICATIONS	56.00	1	56.00
2817	REQUEST FOR PRIORITIZED EXAMINATION	1680.00	1	1680.00
2111	UTILITY PATENT APPL. SEARCH FEE	280.00	1	280.00
4011	BASIC FILING FEE- UTILITY	64.00	1	64.00
2311	EXAMINATION OF ORIGINAL PATENT APPLICATION	320.00	1	320.00

TOTAL AMOUNT:	**$2,400.00**

This Acknowledgement Receipt evidences receipt on the noted date by the USPTO of the indicated documents, characterized by the applicant, and including page counts, where applicable. It serves as evidence of receipt similar to a Post Card, as described in MPEP 503.

New Applications Under 35 U.S.C. 111

If a new application is being filed and the application includes the necessary components for filing date (see 37 CFR 1.53(b)-(d) and MPEP 506), a Filing Receipt (37 CFR 1.54) will be issued in due course and the date shown on this Acknowledgement Receipt will establish the filing date of the application

National Stage of an International Application under 35 U.S.C. 371

If a timely submission to enter the national stage of an international application is compliant with the conditions of 35 U.S.C. 371 and other applicable requirements a Form PCT/DO/EO/903 indicating acceptance of the application as a national stage submission under 35 U.S.C. 371 will be issued in addition to the Filing Receipt, in due course.

New International Application Filed with the USPTO as a Receiving Office

If a new international application is being filed and the international application includes the necessary components for an international filing date (see PCT Article 11 and MPEP 1810), a Notification of the International Application Number and of the International Filing Date (Form PCT/RO/105) will be issued in due course, subject to prescriptions concerning national security, and the date shown on this Acknowledgement Receipt will establish the international filing date of the application.

UNITED STATES
PATENT AND TRADEMARK OFFICE

P.O. Box 1450
Alexandria, VA 22313 - 1450
www.uspto.gov

ELECTRONIC ACKNOWLEDGEMENT RECEIPT

APPLICATION #	RECEIPT DATE / TIME	ATTORNEY DOCKET #
18/928,135	**10/27/2024 06:40:42 PM Z ET**	**BKL-11C5**

Title of Invention

VEHICLE GEAR SELECTION CONTROL

Application Information

APPLICATION TYPE	Utility - Nonprovisional Application under 35 USC 111(a)	PATENT #	-
CONFIRMATION #	1124	FILED BY	Russell Crawford
PATENT CENTER #	67734937	FILING DATE	-
CUSTOMER #	25917	FIRST NAMED INVENTOR	Bennet Langlotz
CORRESPONDENCE ADDRESS	-	AUTHORIZED BY	Bennet Langlotz

Documents

TOTAL DOCUMENTS: 12

DOCUMENT	PAGES	DESCRIPTION	SIZE (KB)
BKL-11C5_Signed_Application_Data_Sheet.pdf	8	Application Data Sheet	2173 KB
BKL-11C5_Signed_Internet_Communications_Authorized.pdf	2	Internet Communications Authorization	72 KB
BKL-11C5_Signed_Track_One_Request.pdf	2	Track One Request	111 KB
BKL-11C5_Power_of_Atty_signed.pdf	2	Power of Attorney	89 KB
BKL-11C5_Statement_signed.pdf	4	Power of Attorney	188 KB

BKL-11C5_OathDec_signed.pdf	2	Oath or Declaration filed	147 KB
BKL-11C5_Drawings_BW.pdf	3	Drawings-only black and white line drawings	56 KB
BKL-11C5_Nonpatent_lit.pdf	2	Non Patent Literature	658 KB
BKL-11C5_Nonpatent_lit-2.pdf	14	Non Patent Literature	1565 KB
BKL-11C5_Signed_IDS_June2024.pdf	4	Information Disclosure Statement (IDS) Form (SB08)	1313 KB
BKL-11C5_SPEC-APP.TEXT.docx	12	Application body structured text document	28 KB

Warning: One or more pages are missing page numbering. Page numbering will be automatically applied after submission.

BKL-11C5_SPEC.pdf	12	Auxiliary PDF of Application	122 KB

Digest

DOCUMENT	MESSAGE DIGEST(SHA-512)
BKL-11C5_Signed_Application_Data_Sheet.pdf	E106C7952A371A787DD7F2173CE20256D469BCD9FA768F6C97F3DBD99E8ED41E190CD27017D3FF76D23C5C98D8CA0611FB7B5CC418D5021C0B87A7092D54F3E2
BKL-11C5_Signed_Internet_Communications_Authorized.pdf	1F7DCDFAA00FAF7A363406DEBA9F2710BE5A5EC8C58D3B60212DC75BBC98A80FF73CA913F8A5061DDF34885DFB262A68340E807F84D538B6A8B6CF434A6FDDAA
BKL-11C5_Signed_Track_One_Request.pdf	71EEFBD14F3D1AE80397B1588B7B410D1433B6A13AE8439B81AE2AA8CB63701CE33AE56ECB48A50ECF90531B8C46348E460627418B134466F722210C64BF6E10
BKL-11C5_Power_of_Atty_signed.pdf	722FFA62C4C366F8BCA9BE1682EF7696D48CD4E6738D9436FD69A86044E9DF321DB9B0A87DF6C84948566E4D7D16D86488D0720613A354A0DCCD3FB7E8E8F473
BKL-11C5_Statement_signed.pdf	8598C232B008BFB7FE4B5AE056BBA833765B4669F52584474B2C933730B620F4F64C9BAF9EC8786465C43BA668A75D216EF7FEB076EBA0A6B15CB864F63075C6
BKL-11C5_OathDec_signed.pdf	7FE4712CA5AC0D4193FEA4F586302C2D1E715A225A84376D342735F057BA1004FF90A0A92C7A801B8AA4E4AC06511E649E13396D30074BFA5EB33239548AB4AC
BKL-11C5_Drawings_BW.pdf	3862E8E883A3EDA1D75CBB3CF90F3D266DD8F506F117A362

	9C304214359EE56C33DEBC861443A57F23C52BFD377AD96D8F57BCA48BBA4F19995262575A916B4B
BKL-11C5_Nonpatent_lit.pdf	AD52DE3115BC76F9091BDB76B7D81E18C12F4D9ACD48BCA9B77778C9FA3528171D7133CB878A1921C2A8F8448B415F29CCBF8AE3C6FCDD410846F63EB3A67AD8
BKL-11C5_Nonpatent_lit-2.pdf	40AB78DECDD5831749F21C3EC03F99B138B65909EADAF61F884229324AC0D56872927701B7C1AE32748AE733E5F2810C42E828643F390D3BC68078A4D4DD5B90
BKL-11C5_Signed_IDS_June2024.pdf	C050347F37769AD2275825FECDEF556615F734A5CED42CE0FA77848AF3ECC1F0B05A385EBD02ACD5F16CB12F26AAF3AF11EC2D1BC1094CED509870C4D16BE50D
BKL-11C5_SPEC-APP.TEXT.docx	EC72CA7C0680C2E117168616DA4ED632361702F8894C793F05FC764F979827D87F4D718984A6D3E929145DB34E7FF6FA1144A4E94543F165F99E46E1C4AE72C6
BKL-11C5_SPEC.pdf	722E456FD1ABCFB7E144623B4AA1C004989DD4DB481101502371E493DDC9ECDE130F94D7C61FC1515288AA3EDC275F2BE2319646FB3A0E23DBC7DDEA7B432F63

This Acknowledgement Receipt evidences receipt on the noted date by the USPTO of the indicated documents, characterized by the applicant, and including page counts, where applicable. It serves as evidence of receipt similar to a Post Card, as described in MPEP 503.

New Applications Under 35 U.S.C. 111

If a new application is being filed and the application includes the necessary components for filing date (see 37 CFR 1.53(b)-(d) and MPEP 506), a Filing Receipt (37 CFR 1.54) will be issued in due course and the date shown on this Acknowledgement Receipt will establish the filing date of the application

National Stage of an International Application under 35 U.S.C. 371

If a timely submission to enter the national stage of an international application is compliant with the conditions of 35 U.S.C. 371 and other applicable requirements a Form PCT/DO/EO/903 indicating acceptance of the application as a national stage submission under 35 U.S.C. 371 will be issued in addition to the Filing Receipt, in due course.

New International Application Filed with the USPTO as a Receiving Office

If a new international application is being filed and the international application includes the necessary components for an international filing date (see PCT Article 11 and MPEP 1810), a Notification of the International Application Number and of the International Filing Date (Form PCT/RO/105) will be issued in due course, subject to prescriptions concerning national security, and the date shown on this Acknowledgement Receipt will establish the international filing date of the application.

PTO/AIA/96 (08-12)
Approved for use through 01/31/2013. OMB 0651-0031
U.S. Patent and Trademark Office, U.S. DEPARTMENT OF COMMERCE
Under the Paperwork Reduction Act of 1995, no persons are required to respond to a collection of information unless it displays a valid OMB control number.

STATEMENT UNDER 37 CFR 3.73(c)

Applicant/Patent Owner: Bulletproof Property Management, LLC

Application No./Patent No.: _____ Filed/Issue Date: _____

Titled: VEHICLE GEAR SELECTION CONTROL

Bulletproof Property Management, LLC, a corporation

(Name of Assignee) (Type of Assignee, e.g., corporation, partnership, university, government agency, etc.)

states that, for the patent application/patent identified above, it is (choose **one** of options 1, 2, 3 or 4 below):

1. ☑ The assignee of the entire right, title, and interest.

2. ☐ An assignee of less than the entire right, title, and interest (check applicable box):

☐ The extent (by percentage) of its ownership interest is _____%. Additional Statement(s) by the owners holding the balance of the interest must be submitted to account for 100% of the ownership interest.

☐ There are unspecified percentages of ownership. The other parties, including inventors, who together own the entire right, title and interest are:

Additional Statement(s) by the owner(s) holding the balance of the interest must be submitted to account for the entire right, title, and interest.

3. ☐ The assignee of an undivided interest in the entirety (a complete assignment from one of the joint inventors was made). The other parties, including inventors, who together own the entire right, title, and interest are:

Additional Statement(s) by the owner(s) holding the balance of the interest must be submitted to account for the entire right, title, and interest.

4. ☐ The recipient, via a court proceeding or the like (*e.g.*, bankruptcy, probate), of an undivided interest in the entirety (a complete transfer of ownership interest was made). The certified document(s) showing the transfer is attached.

The interest identified in option 1, 2 or 3 above (not option 4) is evidenced by either (choose **one** of options A or B below):

A. ☑ An assignment from the inventor(s) of the patent application/patent identified above. The assignment was recorded in the United States Patent and Trademark Office at Reel _____, Frame _____, or for which a copy thereof is attached.

B. ☐ A chain of title from the inventor(s), of the patent application/patent identified above, to the current assignee as follows:

1. From: _____ To: _____

The document was recorded in the United States Patent and Trademark Office at

Reel _____, Frame _____, or for which a copy thereof is attached.

2. From: _____ To: _____

The document was recorded in the United States Patent and Trademark Office at

Reel _____, Frame _____, or for which a copy thereof is attached.

This collection of information is required by 37 CFR 3.73(b). The information is required to obtain or retain a benefit by the public which is to file (and by the USPTO to process) an application. Confidentiality is governed by 35 U.S.C. 122 and 37 CFR 1.11 and 1.14. This collection is estimated to take 12 minutes to complete, including gathering, preparing, and submitting the completed application form to the USPTO. Time will vary depending upon the individual case. Any comments on the amount of time you require to complete this form and/or suggestions for reducing this burden, should be sent to the Chief Information Officer, U.S. Patent and Trademark Office, U.S. Department of Commerce, P.O. Box 1450, Alexandria, VA 22313-1450. DO NOT SEND FEES OR COMPLETED FORMS TO THIS ADDRESS. **SEND TO: Commissioner for Patents, P.O. Box 1450, Alexandria, VA 22313-1450.**

If you need assistance in completing the form, call 1-800-PTO-9199 and select option 2.

Under the Paperwork Reduction Act of 1995, no persons are required to respond to a collection of information unless it displays a valid OMB control number.

STATEMENT UNDER 37 CFR 3.73(c)

3. From: _____ To: _____

The document was recorded in the United States Patent and Trademark Office at

Reel _____, Frame _____, or for which a copy thereof is attached.

4. From: _____ To: _____

The document was recorded in the United States Patent and Trademark Office at

Reel _____, Frame _____, or for which a copy thereof is attached.

5. From: _____ To: _____

The document was recorded in the United States Patent and Trademark Office at

Reel _____, Frame _____, or for which a copy thereof is attached.

6. From: _____ To: _____

The document was recorded in the United States Patent and Trademark Office at

Reel _____, Frame _____, or for which a copy thereof is attached.

☐ Additional documents in the chain of title are listed on a supplemental sheet(s).

☑ As required by 37 CFR 3.73(c)(1)(i), the documentary evidence of the chain of title from the original owner to the assignee was, or concurrently is being, submitted for recordation pursuant to 37 CFR 3.11.

[NOTE: A separate copy (i.e., a true copy of the original assignment document(s)) must be submitted to Assignment Division in accordance with 37 CFR Part 3, to record the assignment in the records of the USPTO. See MPEP 302.08]

The undersigned (whose title is supplied below) is authorized to act on behalf of the assignee.

/bennet langlotz/	01/03/2024
Signature	Date
Bennet Langlotz	Owner
Printed or Typed Name	Title or Registration Number

Privacy Act Statement

The **Privacy Act of 1974 (P.L. 93-579)** requires that you be given certain information in connection with your submission of the attached form related to a patent application or patent. Accordingly, pursuant to the requirements of the Act, please be advised that: (1) the general authority for the collection of this information is 35 U.S.C. 2(b)(2); (2) furnishing of the information solicited is voluntary; and (3) the principal purpose for which the information is used by the U.S. Patent and Trademark Office is to process and/or examine your submission related to a patent application or patent. If you do not furnish the requested information, the U.S. Patent and Trademark Office may not be able to process and/or examine your submission, which may result in termination of proceedings or abandonment of the application or expiration of the patent.

The information provided by you in this form will be subject to the following routine uses:

1. The information on this form will be treated confidentially to the extent allowed under the Freedom of Information Act (5 U.S.C. 552) and the Privacy Act (5 U.S.C 552a). Records from this system of records may be disclosed to the Department of Justice to determine whether disclosure of these records is required by the Freedom of Information Act.
2. A record from this system of records may be disclosed, as a routine use, in the course of presenting evidence to a court, magistrate, or administrative tribunal, including disclosures to opposing counsel in the course of settlement negotiations.
3. A record in this system of records may be disclosed, as a routine use, to a Member of Congress submitting a request involving an individual, to whom the record pertains, when the individual has requested assistance from the Member with respect to the subject matter of the record.
4. A record in this system of records may be disclosed, as a routine use, to a contractor of the Agency having need for the information in order to perform a contract. Recipients of information shall be required to comply with the requirements of the Privacy Act of 1974, as amended, pursuant to 5 U.S.C. 552a(m).
5. A record related to an International Application filed under the Patent Cooperation Treaty in this system of records may be disclosed, as a routine use, to the International Bureau of the World Intellectual Property Organization, pursuant to the Patent Cooperation Treaty.
6. A record in this system of records may be disclosed, as a routine use, to another federal agency for purposes of National Security review (35 U.S.C. 181) and for review pursuant to the Atomic Energy Act (42 U.S.C. 218(c)).
7. A record from this system of records may be disclosed, as a routine use, to the Administrator, General Services, or his/her designee, during an inspection of records conducted by GSA as part of that agency's responsibility to recommend improvements in records management practices and programs, under authority of 44 U.S.C. 2904 and 2906. Such disclosure shall be made in accordance with the GSA regulations governing inspection of records for this purpose, and any other relevant (*i.e.*, GSA or Commerce) directive. Such disclosure shall not be used to make determinations about individuals.
8. A record from this system of records may be disclosed, as a routine use, to the public after either publication of the application pursuant to 35 U.S.C. 122(b) or issuance of a patent pursuant to 35 U.S.C. 151. Further, a record may be disclosed, subject to the limitations of 37 CFR 1.14, as a routine use, to the public if the record was filed in an application which became abandoned or in which the proceedings were terminated and which application is referenced by either a published application, an application open to public inspection or an issued patent.
9. A record from this system of records may be disclosed, as a routine use, to a Federal, State, or local law enforcement agency, if the USPTO becomes aware of a violation or potential violation of law or regulation.

ASSIGNMENT

WHEREAS, I (we), Bennet Langlotz, of PO Box PO Box 660675 #37585, Dallas, Texas 75266-0675 (hereinafter "Inventor(s)") have invented a certain invention entitled "VEHICLE GEAR SELECTION CONTROL" for which I am (we are) making application for Letters Patent of the United States, said application having been executed by me on:

January 3, 2024; and
month application signed and date

WHEREAS, Bulletproof Property Management, LLC., a corporation organized under the laws of the State of Wyoming, having a place of business at 1621 Central Avenue, Cheyenne, Wyoming 82001 (hereinafter "Company"), is desirous of acquiring an interest therein:

NOW, THEREFORE, in consideration of good and valuable consideration, the receipt of which is hereby acknowledged, **I (we)**, **the Inventor(s), hereby sell, assign and transfer to the Company**, the full and exclusive right, title and interest in and to said invention, patent application and patent rights throughout the world, including foreign patent priority rights, the right to file and prosecute International Applications under the Patent Cooperation Treaty, and the right to file and prosecute applications under the European Patent Convention; said invention, application and letters patent in this or any foreign country, and all divisions, continuations, reissues and extensions thereof, to be held and enjoyed by the Company, for its own use and benefit, and for its successors and assigns to the full end of the term for which letters patent may be granted in this or any foreign country, as fully and entirely as the same would have been held by me had this assignment and sale not been made, and covenant that I have full right so to do, and agree that I will communicate to the Company, or its successors and assigns, any facts known to me respecting said invention, and testify in any legal proceeding, sign all lawful papers, execute all divisional, continuing and reissue applications, make all rightful oaths, and **do everything possible to aid the Company, its successors and assigns to obtain and enforce proper patent protection** for said invention in this or any foreign country.

Executed at the place and date opposite my signature below.

Bennet Langlotz

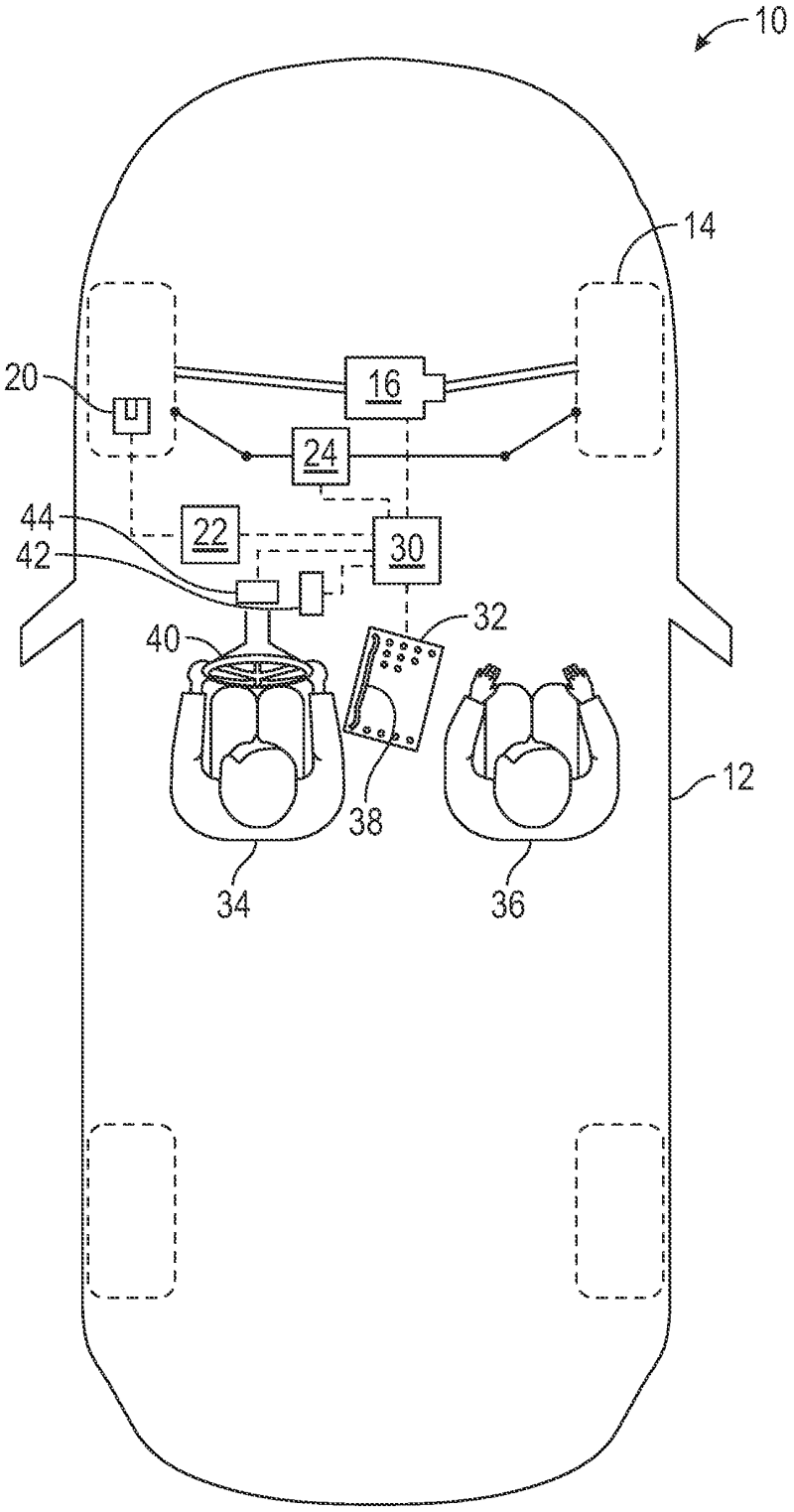

FIG. 1

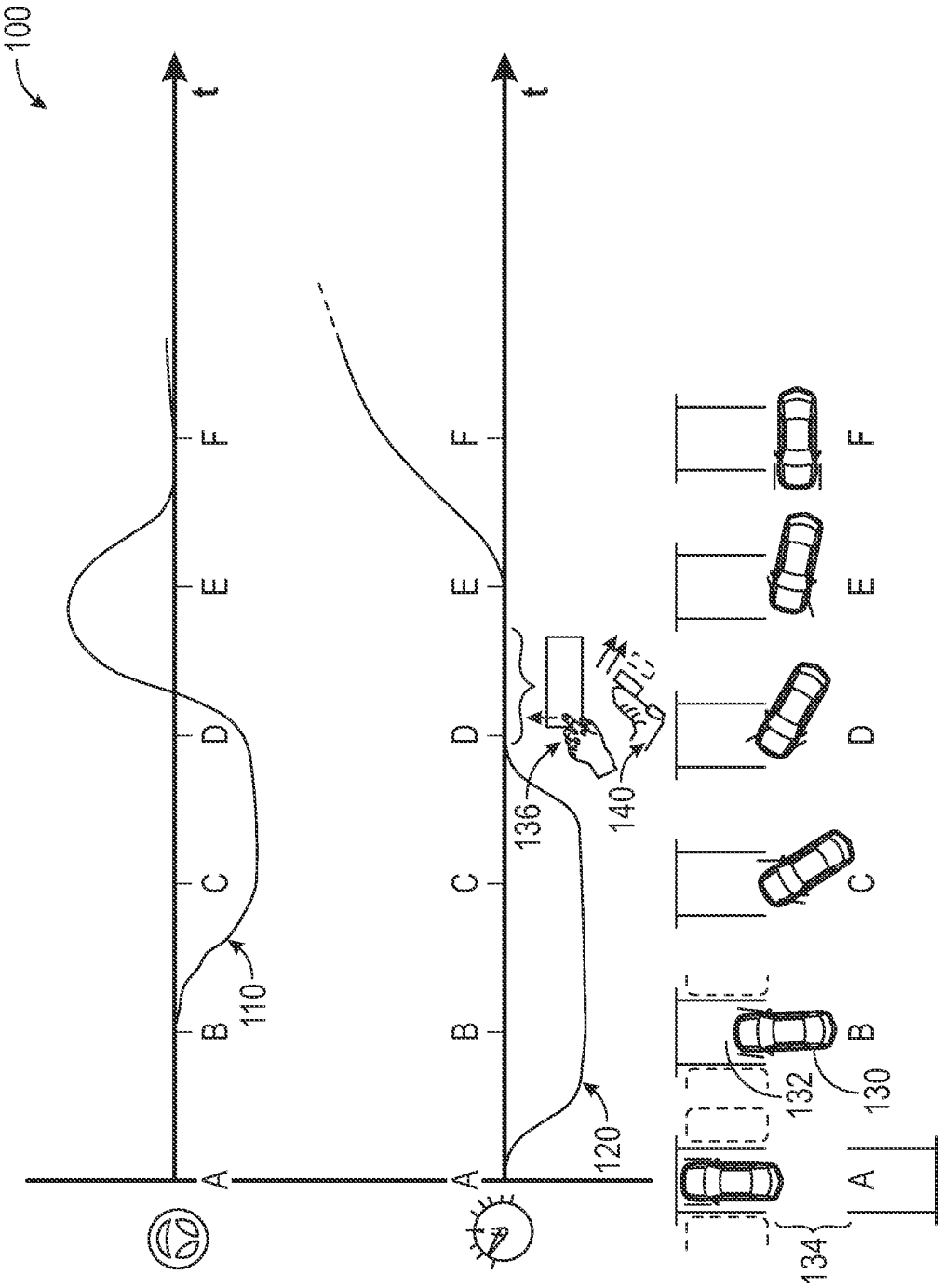

FIG. 2

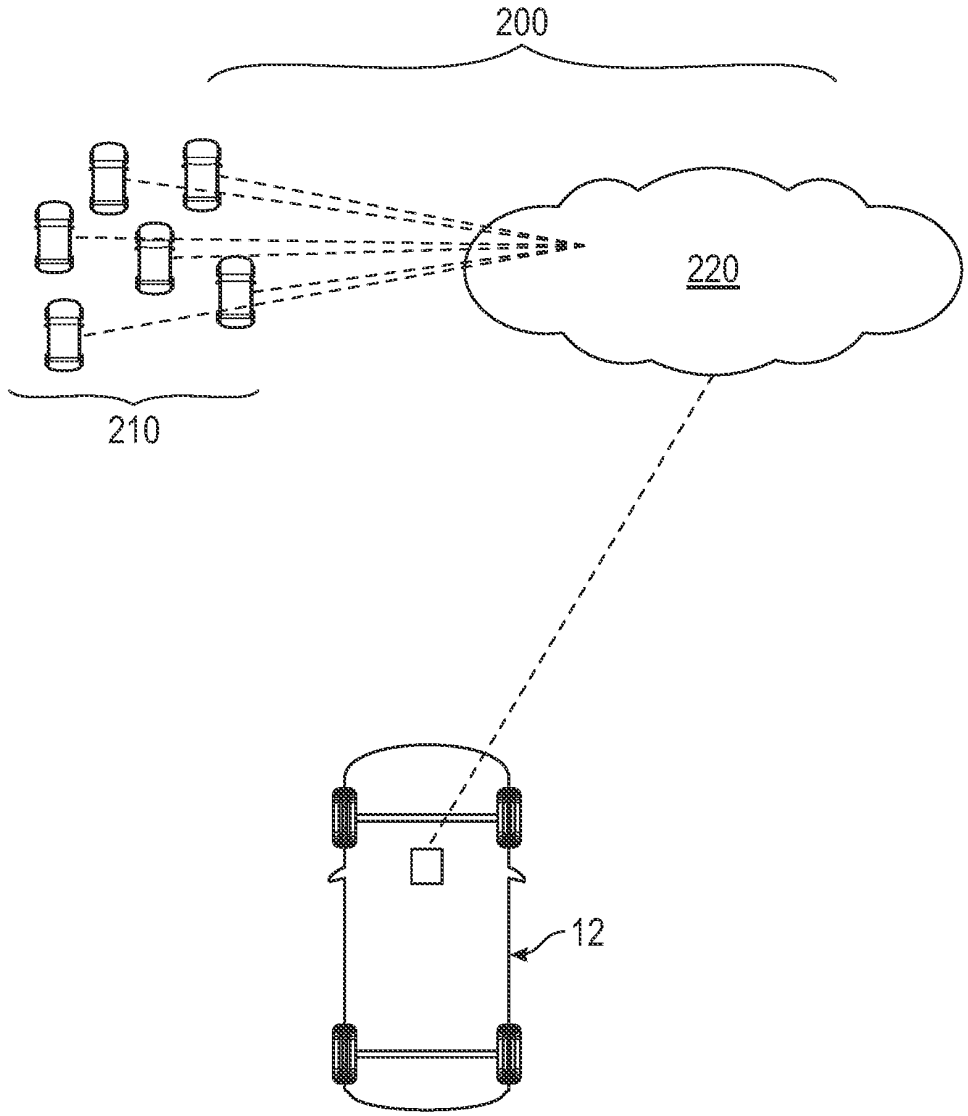

FIG. 3

PATENT APPLICATION FEE DETERMINATION RECORD

Substitute for Form PTO-875

Application or Docket Number
18/928,135

APPLICATION AS FILED - PART I

FOR	(Column 1) NUMBER FILED	(Column 2) NUMBER EXTRA	SMALL ENTITY RATE($)	SMALL ENTITY FEE($)	OR	OTHER THAN SMALL ENTITY RATE($)	OTHER THAN SMALL ENTITY FEE($)
BASIC FEE (37 CFR 1.16(a), (b), or (c))	N/A	N/A	N/A	64		N/A	
SEARCH FEE (37 CFR 1.16(k), (i), or (m))	N/A	N/A	N/A	280		N/A	
EXAMINATION FEE (37 CFR 1.16(o), (p), or (q))	N/A	N/A	N/A	320		N/A	
TOTAL CLAIMS (37 CFR 1.16(i))	14 minus 20 =	* 0	x =	0	OR		
INDEPENDENT CLAIMS (37 CFR 1.16(h))	2 minus 3 =	*	x =	0			
APPLICATION SIZE FEE (37 CFR 1.16(s))	If the specification and drawings exceed 100 sheets of paper, the application size fee due is $310 ($155 for small entity) for each additional 50 sheets or fraction thereof. See 35 U.S.C. 41(a)(1)(G) and 37 CFR 1.16(s).			0			
MULTIPLE DEPENDENT CLAIM PRESENT (37 CFR 1.16(j))				0			
* If the difference in column 1 is less than zero, enter "0" in column 2.			TOTAL	664		TOTAL	

APPLICATION AS AMENDED - PART II

		(Column 1) CLAIMS REMAINING AFTER AMENDMENT		(Column 2) HIGHEST NUMBER PREVIOUSLY PAID FOR	(Column 3) PRESENT EXTRA	SMALL ENTITY RATE($)	SMALL ENTITY ADDITIONAL FEE($)	OR	OTHER THAN SMALL ENTITY RATE($)	OTHER THAN SMALL ENTITY ADDITIONAL FEE($)
AMENDMENT A	Total (37 CFR 1.16(i))	*	Minus	**	=	x =		OR	x =	
AMENDMENT A	Independent (37 CFR 1.16(h))	*	Minus	***	=	x =		OR	x =	
AMENDMENT A	Application Size Fee (37 CFR 1.16(s))									
AMENDMENT A	FIRST PRESENTATION OF MULTIPLE DEPENDENT CLAIM (37 CFR 1.16(j))							OR		
						TOTAL ADD'L FEE		OR	TOTAL ADD'L FEE	

		(Column 1) CLAIMS REMAINING AFTER AMENDMENT		(Column 2) HIGHEST NUMBER PREVIOUSLY PAID FOR	(Column 3) PRESENT EXTRA	RATE($)	ADDITIONAL FEE($)		RATE($)	ADDITIONAL FEE($)
AMENDMENT B	Total (37 CFR 1.16(i))	*	Minus	**	=	x =		OR	x =	
AMENDMENT B	Independent (37 CFR 1.16(h))	*	Minus	***	=	x =		OR	x =	
AMENDMENT B	Application Size Fee (37 CFR 1.16(s))									
AMENDMENT B	FIRST PRESENTATION OF MULTIPLE DEPENDENT CLAIM (37 CFR 1.16(j))							OR		
						TOTAL ADD'L FEE		OR	TOTAL ADD'L FEE	

* If the entry in column 1 is less than the entry in column 2, write "0" in column 3.
** If the "Highest Number Previously Paid For" IN THIS SPACE is less than 20, enter "20".
*** If the "Highest Number Previously Paid For" IN THIS SPACE is less than 3, enter "3".
The "Highest Number Previously Paid For" (Total or Independent) is the highest found in the appropriate box in column 1.

UNITED STATES PATENT AND TRADEMARK OFFICE

UNITED STATES DEPARTMENT OF COMMERCE
United States Patent and Trademark Office
Address: COMMISSIONER FOR PATENTS
P.O. Box 1450
Alexandria, Virginia 22313-1450
www.uspto.gov

APPLICATION NUMBER	FILING or 371(c) DATE	GRP ART UNIT	FIL FEE REC'D	ATTY.DOCKET.NO	TOT CLAIMS	IND CLAIMS
18/928,135	10/27/2024		664	BKL-11C5	14	2

CONFIRMATION NO. 1124

FILING RECEIPT

OC000000079967915

25917
LANGLOTZ PATENT & TRADEMARK WORKS, LLC
PO BOX 660675 #37585
Dallas, TX 75266-0675

Date Mailed: 10/30/2024

Receipt is acknowledged of this non-provisional utility patent application. The application will be taken up for examination in due course. Applicant will be notified as to the results of the examination. Any correspondence concerning the application must include the following identification information: the U.S. APPLICATION NUMBER, FILING DATE, NAME OF FIRST INVENTOR, and TITLE OF INVENTION. Fees transmitted by check or draft are subject to collection.

Please verify the accuracy of the data presented on this receipt. If an error is noted on this Filing Receipt, please submit a written request for a corrected Filing Receipt, including a properly marked-up ADS showing the changes with strike-through for deletions and underlining for additions. If you received a "Notice to File Missing Parts" or other Notice requiring a response for this application, please submit any request for correction to this Filing Receipt with your reply to the Notice. When the USPTO processes the reply to the Notice, the USPTO will generate another Filing Receipt incorporating the requested corrections provided that the request is grantable.

Inventor(s)

Bennet Langlotz, Dallas, TX;

Applicant(s)

Bulletproof Property Management, LLC, Cheyenne, WY;

Assignment For Published Patent Application

Bulletproof Property Management, LLC, Cheyenne, WY

Power of Attorney: The patent practitioners associated with Customer Number 25917

Domestic Priority data as claimed by applicant

This application is a CON of 18/403,221 01/03/2024
which is a CIP of 18/205,823 06/05/2023 PAT 11,932,230

Foreign Applications for which priority is claimed (You may be eligible to benefit from the **Patent Prosecution Highway** program at the USPTO. Please see http://www.uspto.gov for more information.) - None.
Foreign application information must be provided in an Application Data Sheet in order to constitute a claim to foreign priority. See 37 CFR 1.55 and 1.76.

Permission to Access Application via Priority Document Exchange: Yes

Permission to Access Search Results: Yes

Applicant may provide or rescind an authorization for access using Form PTO/SB/39 or Form PTO/SB/69 as appropriate.

If Required, Foreign Filing License Granted: 10/29/2024

The country code and number of your priority application, to be used for filing abroad under the Paris Convention, is **US 18/928,135**

Projected Publication Date: 02/06/2025

Non-Publication Request: No

Early Publication Request: No
**** SMALL ENTITY ****
Title

VEHICLE GEAR SELECTION CONTROL

Preliminary Class

Statement under 37 CFR 1.55 or 1.78 for AIA (First Inventor to File) Transition Applications: No

PROTECTING YOUR INVENTION OUTSIDE THE UNITED STATES

Since the rights granted by a U.S. patent extend only throughout the territory of the United States and have no effect in a foreign country, an inventor who wishes patent protection in another country must apply for a patent in a specific country or in regional patent offices. Applicants may wish to consider the filing of an international application under the Patent Cooperation Treaty (PCT). An international (PCT) application generally has the same effect as a regular national patent application in each PCT-member country. The PCT process **simplifies** the filing of patent applications on the same invention in member countries, but **does not result** in a grant of "an international patent" and does not eliminate the need of applicants to file additional documents and fees in countries where patent protection is desired.

Almost every country has its own patent law, and a person desiring a patent in a particular country must make an application for patent in that country in accordance with its particular laws. Since the laws of many countries differ in various respects from the patent law of the United States, applicants are advised to seek guidance from specific foreign countries to ensure that patent rights are not lost prematurely.

Applicants also are advised that in the case of inventions made in the United States, the Director of the USPTO must issue a license before applicants can apply for a patent in a foreign country. The filing of a U.S. patent application serves as a request for a foreign filing license. The application's filing receipt contains further information and guidance as to the status of applicant's license for foreign filing.

Applicants may wish to consult the USPTO booklet, "General Information Concerning Patents" (specifically, the section entitled "Treaties and Foreign Patents") for more information on timeframes and deadlines for filing foreign patent applications. The guide is available either by contacting the USPTO Contact Center at 800-786-9199, or it can be viewed on the USPTO website at http://www.uspto.gov/web/offices/pac/doc/general/index.html.

For information on preventing theft of your intellectual property (patents, trademarks and copyrights), you may wish to consult the U.S. Government website, http://www.stopfakes.gov. Part of a Department of Commerce initiative, this website includes self-help "toolkits" giving innovators guidance on how to protect intellectual property in specific

countries such as China, Korea and Mexico. For questions regarding patent enforcement issues, applicants may call the U.S. Government hotline at 1-866-999-HALT (1-866-999-4258).

LICENSE FOR FOREIGN FILING UNDER

Title 35, United States Code, Section 184

Title 37, Code of Federal Regulations, 5.11 & 5.15

GRANTED

The applicant has been granted a license under 35 U.S.C. 184, if the phrase "IF REQUIRED, FOREIGN FILING LICENSE GRANTED" followed by a date appears on this form. Such licenses are issued in all applications where the conditions for issuance of a license have been met, regardless of whether or not a license may be required as set forth in 37 CFR 5.15. The scope and limitations of this license are set forth in 37 CFR 5.15(a) unless an earlier license has been issued under 37 CFR 5.15(b). The license is subject to revocation upon written notification. The date indicated is the effective date of the license, unless an earlier license of similar scope has been granted under 37 CFR 5.13 or 5.14.

This license is to be retained by the licensee and may be used at any time on or after the effective date thereof unless it is revoked. This license is automatically transferred to any related applications(s) filed under 37 CFR 1.53(d). This license is not retroactive.

The grant of a license does not in any way lessen the responsibility of a licensee for the security of the subject matter as imposed by any Government contract or the provisions of existing laws relating to espionage and the national security or the export of technical data. Licensees should apprise themselves of current regulations especially with respect to certain countries, of other agencies, particularly the Office of Defense Trade Controls, Department of State (with respect to Arms, Munitions and Implements of War (22 CFR 121-128)); the Bureau of Industry and Security, Department of Commerce (15 CFR parts 730-774); the Office of Foreign AssetsControl, Department of Treasury (31 CFR Parts 500+) and the Department of Energy.

NOT GRANTED

No license under 35 U.S.C. 184 has been granted at this time, if the phrase "IF REQUIRED, FOREIGN FILING LICENSE GRANTED" DOES NOT appear on this form. Applicant may still petition for a license under 37 CFR 5.12, if a license is desired before the expiration of 6 months from the filing date of the application. If 6 months has lapsed from the filing date of this application and the licensee has not received any indication of a secrecy order under 35 U.S.C. 181, the licensee may foreign file the application pursuant to 37 CFR 5.15(b).

SelectUSA

The United States represents the largest, most dynamic marketplace in the world and is an unparalleled location for business investment, innovation, and commercialization of new technologies. The U.S. offers tremendous resources and advantages for those who invest and manufacture goods here. Through SelectUSA, our nation works to promote and facilitate business investment. SelectUSA provides information assistance to the international investor community; serves as an ombudsman for existing and potential investors; advocates on behalf of U.S. cities, states, and regions competing for global investment; and counsels U.S. economic development organizations on investment attraction best practices. To learn more about why the United States is the best country in the world to develop

technology, manufacture products, deliver services, and grow your business, visit http://www.SelectUSA.gov or call +1-202-482-6800.

United States Patent and Trademark Office

Under Secretary of Commerce for Intellectual Property and
Director of the United States Patent and Trademark Office

WELCOME TO THE UNITED STATES PATENT AND TRADEMARK OFFICE (USPTO)

*Congratulations on taking the first step to protect your invention. You can now advertise or mark any products covered by this application for your invention as **"Patent Pending"** for as long as this application is pending!*

We are here to help you on the rest of your journey.

New to the process? The Patent Basics page will take you from "What is a patent?" to assistance with the application process.

- **www.uspto.gov/PatentBasics**

Consider cost savings. You might qualify for small entity or micro entity status, which means a discount on most USPTO patent fees.

- **www.uspto.gov/EntityStatus**

Become a registered electronic filer (eFiler). You'll gain access to the full capabilities of Patent Center. As a registered eFiler, you can electronically view your submission, track the progress of your application, and respond to USPTO correspondence.

- **www.uspto.gov/NewPatentFilers**

Learn how to identify which of your creative ideas might be intellectual property assets and how to protect them by using the USPTO Intellectual Property (IP) Identifier.

- **ipidentifier.uspto.gov**

We also provide Pro Se Assistance, support specifically geared for **independent inventors without an attorney or agent.** Follow the link below, call us at 866-767-3848, or email **proseassistancecenter@uspto.gov**.

- **www.uspto.gov/ProSePatents**

Need help near you? We have regional offices across the country, as well as Patent and Trademark Resource Centers in libraries in nearly every state, with specialists standing by to help you at no cost.

- **www.uspto.gov/locations**
- **www.uspto.gov/ptrc**

Contact us:

- **General information:** USPTO Contact Center
  - **www.uspto.gov/help**
- **Patent Center:**
  Patent Electronic Business Center
  - **www.uspto.gov/EBC**
- **Pre or post-examination:** Application Assistance Unit
  - **www.uspto.gov/PatentAssistance**

Want to learn more?

- **Access our free services** all in one spot. Find all of our contact centers, nationwide services, events, education, and training.
  - **www.uspto.gov/FreeServices**
- **Connect with us** on Instagram, LinkedIn, Twitter, Facebook, and YouTube.
- **Hear about resources for startups, inventors, and entrepreneurs,** as well as our initiatives engaging women, the military community, and others. These programs offer helpful tips and tricks on identifying and managing your IP, finding options for funding, and expanding your network to support your business.
  - **www.uspto.gov/startups**
  - **www.uspto.gov/inventors**
  - **www.uspto.gov/initiatives**
- We hope you connect with us by subscribing to receive important notifications by email.
  - **www.uspto.gov/subscribe**

Kathi Vidal

Kathi Vidal
Under Secretary of Commerce for Intellectual Property and
Director of the United States Patent and Trademark Office

Derrick Brent
Deputy Under Secretary of Commerce for Intellectual Property and
Deputy Director of the United States Patent and Trademark Office

UNITED STATES PATENT AND TRADEMARK OFFICE

UNITED STATES DEPARTMENT OF COMMERCE
United States Patent and Trademark Office
Address: COMMISSIONER FOR PATENTS
P.O. Box 1450
Alexandria, Virginia 22313-1450
www.uspto.gov

APPLICATION NO.	FILING DATE	FIRST NAMED INVENTOR	ATTORNEY DOCKET NO.	CONFIRMATION NO.
18/928,135	10/27/2024	Bennet Langlotz	BKL-11C5	1124

25917 7590 11/22/2024
LANGLOTZ PATENT & TRADEMARK WORKS, LLC
PO BOX 660675 #37585
Dallas, TX 75266-0675

EXAMINER
CENTRAL, DOCKET

ART UNIT	PAPER NUMBER
OPAP	

NOTIFICATION DATE	DELIVERY MODE
11/22/2024	ELECTRONIC

Please find below and/or attached an Office communication concerning this application or proceeding.

The time period for reply, if any, is set in the attached communication.

Notice of the Office communication was sent electronically on above-indicated "Notification Date" to the following e-mail address(es):

pair@langlotz.com

PTOL-90A (Rev. 04/07)

Decision Granting Request for Prioritized Examination (Track I)	**Application No.** 18/928,135	**Applicant(s)** Langlotz, Bennet	
	Examiner FIKIRTE A GEREMEW	**Art Unit** OMBL	**AIA (FITF) Status** Yes

1. THE REQUEST FILED 27 October 2024 IS **GRANTED** .

   The above-identified application has met the requirements for prioritized examination
   A. ☑ for an original nonprovisional application (Track I).
   B. ☐ for an application undergoing continued examination (RCE).

2. **The above-identified application will undergo prioritized examination**. The application will be accorded special status throughout its entire course of prosecution until one of the following occurs:

   A. filing a **petition for extension of time** to extend the time period for filing a reply;

   B. filing an **amendment to amend the application to contain more than four independent claims, more than thirty total claims** , or a multiple dependent claim;

   C. filing a **request for continued examination** ;

   D. filing a notice of appeal;

   E. filing a request for suspension of action;

   F. mailing of a notice of allowance;

   G. mailing of a final Office action;

   H. completion of examination as defined in 37 CFR 41.102; or

   I. abandonment of the application.

Telephone inquiries with regard to this decision should be directed to FIKIRTE GEREMEW at (703) 756-1930. In his/her absence, calls may be directed to Petition Help Desk at (571) 272-3282.

/FIKIRTE A GEREMEW/ PROGRAM SUPPORT SPECIALIST, OMBL	

U.S. Patent and Trademark Office
PTO-2298 (Rev. 02-2012)

PTO/SB/08a (01-22)
Approved for use through 05/31/2024. OMB 0651-0031
U.S. Patent and Trademark Office; U.S. DEPARTMENT OF COMMERCE
Under the Paperwork Reduction Act of 1995, no persons are required to respond to a collection of information unless it contains a valid OMB control number.

INFORMATION DISCLOSURE STATEMENT BY APPLICANT (Not for submission under 37 CFR 1.99)		
	Application Number	18928135
	Filing Date	2024-10-27
	First Named Inventor	Bennet Langlotz
	Art Unit	3655
	Examiner Name	Young, Edwin
	Attorney Docket Number	BKL-11C5

U.S.PATENTS Remove

Examiner Initial*	Cite No	Patent Number	Kind Code[1]	Issue Date	Name of Patentee or Applicant of cited Document	Pages,Columns,Lines where Relevant Passages or Relevant Figures Appear
	1	11001301		2021-05-11	Joos et al.	
	2	12049217		2024-07-30	Hashimoto	
	3	12084047		2024-09-10	Hiei et al.	
	4	9381922		2016-07-05	Wysietzki et al.	
	5	12151677		2024-11-26	Tamori	
	6	12065130		2024-08-20	Chen et al.	
	7	9085321		2015-07-21	Noh	
	8	11623636		2023-04-11	Tsujino et al.	

INFORMATION DISCLOSURE STATEMENT BY APPLICANT (Not for submission under 37 CFR 1.99)		
	Application Number	18928135
	Filing Date	2024-10-27
	First Named Inventor	Bennet Langlotz
	Art Unit	3655
	Examiner Name	Young, Edwin
	Attorney Docket Number	BKL-11C5

	9	9219887		2015-12-22	Iga et al.	

If you wish to add additional U.S. Patent citation information please click the Add button. Add

U.S.PATENT APPLICATION PUBLICATIONS Remove

Examiner Initial*	Cite No	Publication Number	Kind Code[1]	Publication Date	Name of Patentee or Applicant of cited Document	Pages,Columns,Lines where Relevant Passages or Relevant Figures Appear
	1					

If you wish to add additional U.S. Published Application citation information please click the Add button. Add

FOREIGN PATENT DOCUMENTS Remove

Examiner Initial*	Cite No	Foreign Document Number[3]	Country Code[2] ¡	Kind Code[4]	Publication Date	Name of Patentee or Applicant of cited Document	Pages,Columns,Lines where Relevant Passages or Relevant Figures Appear	T[5]
	1							☐

If you wish to add additional Foreign Patent Document citation information please click the Add button Add

NON-PATENT LITERATURE DOCUMENTS Remove

Examiner Initials*	Cite No	Include name of the author (in CAPITAL LETTERS), title of the article (when appropriate), title of the item (book, magazine, journal, serial, symposium, catalog, etc), date, pages(s), volume-issue number(s), publisher, city and/or country where published.	T[5]
	1		☐

If you wish to add additional non-patent literature document citation information please click the Add button Add

EXAMINER SIGNATURE

Examiner Signature		Date Considered	

*EXAMINER: Initial if reference considered, whether or not citation is in conformance with MPEP 609. Draw line through a citation if not in conformance and not considered. Include copy of this form with next communication to applicant.

PC 6.1.24

INFORMATION DISCLOSURE STATEMENT BY APPLICANT (Not for submission under 37 CFR 1.99)	Application Number	18928135
	Filing Date	2024-10-27
	First Named Inventor	Bennet Langlotz
	Art Unit	3655
	Examiner Name	Young, Edwin
	Attorney Docket Number	BKL-11C5

[1] See Kind Codes of USPTO Patent Documents at www.USPTO.GOV or MPEP 901.04. [2] Enter office that issued the document, by the two-letter code (WIPO Standard ST.3). [3] For Japanese patent documents, the indication of the year of the reign of the Emperor must precede the serial number of the patent document. [4] Kind of document by the appropriate symbols as indicated on the document under WIPO Standard ST.16 if possible. [5] Applicant is to place a check mark here if English language translation is attached.

PC 6.1.24

INFORMATION DISCLOSURE STATEMENT BY APPLICANT (Not for submission under 37 CFR 1.99)	Application Number	18928135
	Filing Date	2024-10-27
	First Named Inventor	Bennet Langlotz
	Art Unit	3655
	Examiner Name	Young, Edwin
	Attorney Docket Number	BKL-11C5

CERTIFICATION STATEMENT

Please see 37 CFR 1.97(e) to make the appropriate selection(s):

☐ That each item of information contained in the information disclosure statement was first cited in any communication from a foreign patent office in a counterpart foreign application not more than three months prior to the filing of the information disclosure statement. See 37 CFR 1.97(e)(1).

OR

☒ That no item of information contained in the information disclosure statement was cited in a communication from a foreign patent office in a counterpart foreign application, and, to the knowledge of the person signing the certification after making reasonable inquiry, no item of information contained in the information disclosure statement was known to any individual designated in 37 CFR 1.56(c) more than three months prior to the filing of the information disclosure statement. See 37 CFR 1.97(e)(2).

☐ See attached certification statement.

☐ A certification statement is not submitted herewith.

FEE

☐ The fee set forth in 37 CFR 1.17 (p) has been submitted herewith.

COPIES

☐ An identification of an earlier application pursuant to 37 CFR 1.98 (d) (1) is attached.

SIGNATURE

A signature of the applicant or representative is required in accordance with CFR 1.33, 10.18. Please see CFR 1.4(d) for the form of the signature.

Signature	/bennet langlotz/	Date (YYYY-MM-DD)	2024-12-05
Name/Print	Bennet Langlotz	Registration Number	35928

This collection of information is required by 37 CFR 1.97 and 1.98. The information is required to obtain or retain a benefit by the public which is to file (and by the USPTO to process) an application. Confidentiality is governed by 35 U.S.C. 122 and 37 CFR 1.14. This collection is estimated to take 1 hour to complete, including gathering, preparing and submitting the completed application form to the USPTO. Time will vary depending upon the individual case. Any comments on the amount of time you require to complete this form and/or suggestions for reducing this burden, should be sent to the Chief Information Officer, U.S. Patent and Trademark Office, U.S. Department of Commerce, P.O. Box 1450, Alexandria, VA 22313-1450. DO NOT SEND FEES OR COMPLETED FORMS TO THIS ADDRESS. **SEND TO: Commissioner for Patents, P.O. Box 1450, Alexandria, VA 22313-1450.**

PC 6.1.24

Privacy Act Statement

The Privacy Act of 1974 (P.L. 93-579) requires that you be given certain information in connection with your submission of the attached form related to a patent application or patent. Accordingly, pursuant to the requirements of the Act, please be advised that: (1) the general authority for the collection of this information is 35 U.S.C. 2(b)(2); (2) furnishing of the information solicited is voluntary; and (3) the principal purpose for which the information is used by the U.S. Patent and Trademark Office is to process and/or examine your submission related to a patent application or patent. If you do not furnish the requested information, the U.S. Patent and Trademark Office may not be able to process and/or examine your submission, which may result in termination of proceedings or abandonment of the application or expiration of the patent.

The information provided by you in this form will be subject to the following routine uses:

1. The information on this form will be treated confidentially to the extent allowed under the Freedom of Information Act (5 U.S.C. 552) and the Privacy Act (5 U.S.C. 552a). Records from this system of records may be disclosed to the Department of Justice to determine whether the Freedom of Information Act requires disclosure of these record s.

2. A record from this system of records may be disclosed, as a routine use, in the course of presenting evidence to a court, magistrate, or administrative tribunal, including disclosures to opposing counsel in the course of settlement negotiations.

3. A record in this system of records may be disclosed, as a routine use, to a Member of Congress submitting a request involving an individual, to whom the record pertains, when the individual has requested assistance from the Member with respect to the subject matter of the record.

4. A record in this system of records may be disclosed, as a routine use, to a contractor of the Agency having need for the information in order to perform a contract. Recipients of information shall be required to comply with the requirements of the Privacy Act of 1974, as amended, pursuant to 5 U.S.C. 552a(m).

5. A record related to an International Application filed under the Patent Cooperation Treaty in this system of records may be disclosed, as a routine use, to the International Bureau of the World Intellectual Property Organization, pursuant to the Patent Cooperation Treaty.

6. A record in this system of records may be disclosed, as a routine use, to another federal agency for purposes of National Security review (35 U.S.C. 181) and for review pursuant to the Atomic Energy Act (42 U.S.C. 218(c)).

7. A record from this system of records may be disclosed, as a routine use, to the Administrator, General Services, or his/her designee, during an inspection of records conducted by GSA as part of that agency's responsibility to recommend improvements in records management practices and programs, under authority of 44 U.S.C. 2904 and 2906. Such disclosure shall be made in accordance with the GSA regulations governing inspection of records for this purpose, and any other relevant (i.e., GSA or Commerce) directive. Such disclosure shall not be used to make determinations about individuals.

8. A record from this system of records may be disclosed, as a routine use, to the public after either publication of the application pursuant to 35 U.S.C. 122(b) or issuance of a patent pursuant to 35 U.S.C. 151. Further, a record may be disclosed, subject to the limitations of 37 CFR 1.14, as a routine use, to the public if the record was filed in an application which became abandoned or in which the proceedings were terminated and which application is referenced by either a published application, an application open to public inspections or an issued patent.

9. A record from this system of records may be disclosed, as a routine use, to a Federal, State, or local law enforcement agency, if the USPTO becomes aware of a violation or potential violation of law or regulation.

UNITED STATES
PATENT AND TRADEMARK OFFICE

P.O. Box 1450
Alexandria, VA 22313 - 1450
www.uspto.gov

ELECTRONIC ACKNOWLEDGEMENT RECEIPT

APPLICATION #	RECEIPT DATE / TIME	ATTORNEY DOCKET #
18/928,135	**12/06/2024 08:05:53 PM Z ET**	**BKL-11C5**

Title of Invention

VEHICLE GEAR SELECTION CONTROL

Application Information

APPLICATION TYPE	Utility - Nonprovisional Application under 35 USC 111(a)	PATENT #	-
CONFIRMATION #	1124	FILED BY	Russell Crawford
PATENT CENTER #	68272001	FILING DATE	10/27/2024
CUSTOMER #	25917	FIRST NAMED INVENTOR	Bennet Langlotz
CORRESPONDENCE ADDRESS	-	AUTHORIZED BY	Bennet Langlotz

Documents

TOTAL DOCUMENTS: 1

DOCUMENT	PAGES	DESCRIPTION	SIZE (KB)
BKL-11C5_Signed_Second_IDS_June2024.pdf	5	Information Disclosure Statement (IDS) Form (SB08)	1313 KB

Digest

DOCUMENT	MESSAGE DIGEST(SHA-512)
BKL-11C5_Signed_Second_IDS_June2024.pdf	E1F9C7EFAA5C798D6C2AAC79FDEC3D486FD9E0787AB95E13FFD416DC67BE52839A7E7C97AB8D62600717D49C9C0D69C9D36998CC29709E3B89ED0707A7A15FFB

This Acknowledgement Receipt evidences receipt on the noted date by the USPTO of the indicated documents, characterized by the applicant, and including page counts, where applicable. It serves as evidence of receipt similar to a Post Card, as described in MPEP 503.

New Applications Under 35 U.S.C. 111

If a new application is being filed and the application includes the necessary components for filing date (see 37 CFR 1.53(b)-(d) and MPEP 506), a Filing Receipt (37 CFR 1.54) will be issued in due course and the date shown on this Acknowledgement Receipt will establish the filing date of the application

National Stage of an International Application under 35 U.S.C. 371

If a timely submission to enter the national stage of an international application is compliant with the conditions of 35 U.S.C. 371 and other applicable requirements a Form PCT/DO/EO/903 indicating acceptance of the application as a national stage submission under 35 U.S.C. 371 will be issued in addition to the Filing Receipt, in due course.

New International Application Filed with the USPTO as a Receiving Office

If a new international application is being filed and the international application includes the necessary components for an international filing date (see PCT Article 11 and MPEP 1810), a Notification of the International Application Number and of the International Filing Date (Form PCT/RO/105) will be issued in due course, subject to prescriptions concerning national security, and the date shown on this Acknowledgement Receipt will establish the international filing date of the application.

Notice of References Cited	Application/Control No. 18/928,135	Applicant(s)/Patent Under Reexamination Langlotz, Bennet	
	Examiner EDWIN YOUNG	Art Unit 3655	Page 1 of 1

U.S. PATENT DOCUMENTS

*		Document Number Country Code-Number-Kind Code	Date YYYY-MM-DD	Name	CPC Classification	US Classification
*	A	US-11932230-B1	2024-03-19	Langlotz; Bennet	B60W10/20	1/1
*	B	US-20240051558-A1	2024-02-15	Shivaprasad; Shreyas	B60W50/082	1/1
*	C	US-20210300349-A1	2021-09-30	HARA; Yuki	B60W30/0956	1/1
*	D	US-20200404192-A1	2020-12-24	SAKURAI; Kazuho	B60R1/27	1/1
*	E	US-20160075329-A1	2016-03-17	TOMOZAWA; Motokatsu	B60W10/20	701/41
*	F	US-20130184979-A1	2013-07-18	Karandikar; Praveen	G08G1/168	701/301
*	G	US-20130110342-A1	2013-05-02	Wuttke; Ulrich	B62D15/029	701/23
*	H	US-5436833-A	1995-07-25	Janecke; Daniel P.	F16H61/0248	701/52
	I					
	J					
	K					
	L					
	M					

FOREIGN PATENT DOCUMENTS

*		Document Number Country Code-Number-Kind Code	Date YYYY-MM-DD	Country	Name	CPC Classification
	N					
	O					
	P					
	Q					
	R					
	S					
	T					

NON-PATENT DOCUMENTS

*		Include as applicable: Author, Title Date, Publisher, Edition or Volume, Pertinent Pages)
	U	
	V	
	W	
	X	

*A copy of this reference is not being furnished with this Office action. (See MPEP § 707.05(a).)
Dates in YYYY-MM-DD format are publication dates. Classifications may be US or foreign.

Search Notes	Application/Control No.	Applicant(s)/Patent Under Reexamination
	18/928,135	Langlotz, Bennet
	Examiner	**Art Unit**
	EDWIN YOUNG	3655

CPC - Searched*		
Symbol	**Date**	**Examiner**
B60W 10/10, 10/20, 30/18009, 50/082, 50/10, 2540/12	12/4/2024	/EAY/
G08G1/22	12/4/2024	/EAY/

CPC Combination Sets - Searched*		
Symbol	**Date**	**Examiner**

US Classification - Searched*			
Class	**Subclass**	**Date**	**Examiner**

* See search history printout included with this form or the SEARCH NOTES box below to determine the scope of the search.

Search Notes		
Search Notes	**Date**	**Examiner**
PE2E search (all databases)	12/4/2024	/EAY/
Updated and expanded search in related application 18/403,221	12/4/2024	/EAY/
All CPC symbols above limited through text search	12/4/2024	/EAY/
Inventor, Assignee and forward/backward citation search	12/4/2024	/EAY/
Google Scholar NPL search	12/4/2024	/EAY/

Interference Search			
US Class/CPC Symbol	**US Subclass/CPC Group**	**Date**	**Examiner**
	Claims text search (see search history)	12/4/2024	/EAY/

/Edwin A Young/ Primary Examiner, Art Unit 3655	

Index of Claims	Application/Control No.	Applicant(s)/Patent Under Reexamination
	18/928,135	Langlotz, Bennet
	Examiner	**Art Unit**
	EDWIN YOUNG	3655

✓	Rejected	-	Cancelled	N	Non-Elected	A	Appeal
=	Allowed	÷	Restricted	I	Interference	O	Objected

CLAIMS

☐ Claims renumbered in the same order as presented by applicant ☐ CPA ☐ T.D. ☐ R.1.47

CLAIM		DATE								
Final	Original	12/04/2024								
	1	✓								
	2	✓								
	3	✓								
	4	✓								
	5	✓								
	6	✓								
	7	✓								
	8	✓								
	9	✓								
	10	✓								
	11	✓								
	12	✓								
	13	✓								
	14	✓								

Doc code: IDS
Doc description: Information Disclosure Statement (IDS) Filed

PTO/SB/08a (01-22)
Approved for use through 05/31/2024. OMB 0651-0031
U.S. Patent and Trademark Office; U.S. DEPARTMENT OF COMMERCE
Under the Paperwork Reduction Act of 1995, no persons are required to respond to a collection of information unless it contains a valid OMB control number.

INFORMATION DISCLOSURE STATEMENT BY APPLICANT (Not for submission under 37 CFR 1.99)		
	Application Number	
	Filing Date	
	First Named Inventor	Bennet Langlotz
	Art Unit	
	Examiner Name	
	Attorney Docket Number	BKL-11C5

U.S.PATENTS Remove

Examiner Initial*	Cite No	Patent Number	Kind Code[1]	Issue Date	Name of Patentee or Applicant of cited Document	Pages,Columns,Lines where Relevant Passages or Relevant Figures Appear
	1					

If you wish to add additional U.S. Patent citation information please click the Add button. Add

U.S.PATENT APPLICATION PUBLICATIONS Remove

Examiner Initial*	Cite No	Publication Number	Kind Code[1]	Publication Date	Name of Patentee or Applicant of cited Document	Pages,Columns,Lines where Relevant Passages or Relevant Figures Appear
	1	20110080305		2011-04-07	Toledo et al.	
	2	20130144492		2013-06-06	Takano et al.	
	3	20200207334		2020-07-02	Cho	
	4	20210269019		2021-09-02	Chen et al.	

If you wish to add additional U.S. Published Application citation information please click the Add button. Add

FOREIGN PATENT DOCUMENTS Remove

Examiner Initial*	Cite No	Foreign Document Number[3]	Country Code[2] ¡	Kind Code[4]	Publication Date	Name of Patentee or Applicant of cited Document	Pages,Columns,Lines where Relevant Passages or Relevant Figures Appear	T[5]

PC 6.1.24

ALL REFERENCES CONSIDERED EXCEPT WHERE LINED THROUGH. /EAY/

INFORMATION DISCLOSURE STATEMENT BY APPLICANT (Not for submission under 37 CFR 1.99)	Application Number	
	Filing Date	
	First Named Inventor	Bennet Langlotz
	Art Unit	
	Examiner Name	
	Attorney Docket Number	BKL-11C5

	1							☐

If you wish to add additional Foreign Patent Document citation information please click the Add button Add

NON-PATENT LITERATURE DOCUMENTS Remove

Examiner Initials*	Cite No	Include name of the author (in CAPITAL LETTERS), title of the article (when appropriate), title of the item (book, magazine, journal, serial, symposium, catalog, etc), date, pages(s), volume-issue number(s), publisher, city and/or country where published.	T[5]
	1	CNET CARS, "Elon Musk explains Auto Shift feature in Model S," YouTube, https://www.youtube.com/watch?v=R4bskxzZvEA, June 11, 2021, Accessed March 25, 2024.	☐
	2	INTERNATIONAL SEARCHING AUTHORITY, "NOTIFICATION OF TRANSMITTAL OF THE INTERNATIONAL SEARCH REPORT AND THE WRITTEN OPINION OF THE INTERNATIONAL SEARCHING AUTHORITY, OR THE DECLARATION," Date of mailing: May 8, 2024, Date search was completed: April 26, 2024.	☐

If you wish to add additional non-patent literature document citation information please click the Add button Add

EXAMINER SIGNATURE

Examiner Signature	/Edwin A Young/	Date Considered	12/02/2024

*EXAMINER: Initial if reference considered, whether or not citation is in conformance with MPEP 609. Draw line through a citation if not in conformance and not considered. Include copy of this form with next communication to applicant.

[1] See Kind Codes of USPTO Patent Documents at www.USPTO.GOV or MPEP 901.04. [2] Enter office that issued the document, by the two-letter code (WIPO Standard ST.3). [3] For Japanese patent documents, the indication of the year of the reign of the Emperor must precede the serial number of the patent document. [4] Kind of document by the appropriate symbols as indicated on the document under WIPO Standard ST.16 if possible. [5] Applicant is to place a check mark here if English language translation is attached.

PC 6.1.24

ALL REFERENCES CONSIDERED EXCEPT WHERE LINED THROUGH. /EAY/

INFORMATION DISCLOSURE STATEMENT BY APPLICANT (Not for submission under 37 CFR 1.99)	Application Number	
	Filing Date	
	First Named Inventor	Bennet Langlotz
	Art Unit	
	Examiner Name	
	Attorney Docket Number	BKL-11C5

CERTIFICATION STATEMENT

Please see 37 CFR 1.97(e) to make the appropriate selection(s):

☐ That each item of information contained in the information disclosure statement was first cited in any communication from a foreign patent office in a counterpart foreign application not more than three months prior to the filing of the information disclosure statement. See 37 CFR 1.97(e)(1).

OR

☐ That no item of information contained in the information disclosure statement was cited in a communication from a foreign patent office in a counterpart foreign application, and, to the knowledge of the person signing the certification after making reasonable inquiry, no item of information contained in the information disclosure statement was known to any individual designated in 37 CFR 1.56(c) more than three months prior to the filing of the information disclosure statement. See 37 CFR 1.97(e)(2).

☐ See attached certification statement.

☒ A certification statement is not submitted herewith.

FEE

☐ The fee set forth in 37 CFR 1.17 (p) has been submitted herewith.

COPIES

☐ An identification of an earlier application pursuant to 37 CFR 1.98 (d) (1) is attached.

SIGNATURE

A signature of the applicant or representative is required in accordance with CFR 1.33, 10.18. Please see CFR 1.4(d) for the form of the signature.

Signature	/bennet langlotz/	Date (YYYY-MM-DD)	2024-10-27
Name/Print	Bennet Langlotz	Registration Number	35928

This collection of information is required by 37 CFR 1.97 and 1.98. The information is required to obtain or retain a benefit by the public which is to file (and by the USPTO to process) an application. Confidentiality is governed by 35 U.S.C. 122 and 37 CFR 1.14. This collection is estimated to take 1 hour to complete, including gathering, preparing and submitting the completed application form to the USPTO. Time will vary depending upon the individual case. Any comments on the amount of time you require to complete this form and/or suggestions for reducing this burden, should be sent to the Chief Information Officer, U.S. Patent and Trademark Office, U.S. Department of Commerce, P.O. Box 1450, Alexandria, VA 22313-1450. DO NOT SEND FEES OR COMPLETED FORMS TO THIS ADDRESS. **SEND TO: Commissioner for Patents, P.O. Box 1450, Alexandria, VA 22313-1450.**

PC 6.1.24

ALL REFERENCES CONSIDERED EXCEPT WHERE LINED THROUGH. /EAY/

Privacy Act Statement

The Privacy Act of 1974 (P.L. 93-579) requires that you be given certain information in connection with your submission of the attached form related to a patent application or patent. Accordingly, pursuant to the requirements of the Act, please be advised that: (1) the general authority for the collection of this information is 35 U.S.C. 2(b)(2); (2) furnishing of the information solicited is voluntary; and (3) the principal purpose for which the information is used by the U.S. Patent and Trademark Office is to process and/or examine your submission related to a patent application or patent. If you do not furnish the requested information, the U.S. Patent and Trademark Office may not be able to process and/or examine your submission, which may result in termination of proceedings or abandonment of the application or expiration of the patent.

The information provided by you in this form will be subject to the following routine uses:

1. The information on this form will be treated confidentially to the extent allowed under the Freedom of Information Act (5 U.S.C. 552) and the Privacy Act (5 U.S.C. 552a). Records from this system of records may be disclosed to the Department of Justice to determine whether the Freedom of Information Act requires disclosure of these record s.

2. A record from this system of records may be disclosed, as a routine use, in the course of presenting evidence to a court, magistrate, or administrative tribunal, including disclosures to opposing counsel in the course of settlement negotiations.

3. A record in this system of records may be disclosed, as a routine use, to a Member of Congress submitting a request involving an individual, to whom the record pertains, when the individual has requested assistance from the Member with respect to the subject matter of the record.

4. A record in this system of records may be disclosed, as a routine use, to a contractor of the Agency having need for the information in order to perform a contract. Recipients of information shall be required to comply with the requirements of the Privacy Act of 1974, as amended, pursuant to 5 U.S.C. 552a(m).

5. A record related to an International Application filed under the Patent Cooperation Treaty in this system of records may be disclosed, as a routine use, to the International Bureau of the World Intellectual Property Organization, pursuant to the Patent Cooperation Treaty.

6. A record in this system of records may be disclosed, as a routine use, to another federal agency for purposes of National Security review (35 U.S.C. 181) and for review pursuant to the Atomic Energy Act (42 U.S.C. 218(c)).

7. A record from this system of records may be disclosed, as a routine use, to the Administrator, General Services, or his/her designee, during an inspection of records conducted by GSA as part of that agency's responsibility to recommend improvements in records management practices and programs, under authority of 44 U.S.C. 2904 and 2906. Such disclosure shall be made in accordance with the GSA regulations governing inspection of records for this purpose, and any other relevant (i.e., GSA or Commerce) directive. Such disclosure shall not be used to make determinations about individuals.

8. A record from this system of records may be disclosed, as a routine use, to the public after either publication of the application pursuant to 35 U.S.C. 122(b) or issuance of a patent pursuant to 35 U.S.C. 151. Further, a record may be disclosed, subject to the limitations of 37 CFR 1.14, as a routine use, to the public if the record was filed in an application which became abandoned or in which the proceedings were terminated and which application is referenced by either a published application, an application open to public inspections or an issued patent.

9. A record from this system of records may be disclosed, as a routine use, to a Federal, State, or local law enforcement agency, if the USPTO becomes aware of a violation or potential violation of law or regulation.

PE2E SEARCH - Search History (Prior Art)

Ref #	Hits	Search Query	DBs	Default Operator	Plurals	British Equivalents	Time Stamp
L1	6	"18205823"	(US-PGPUB; USPAT; USOCR; FIT (AU, AP, AT, BE, BG, BR, BY, CA, CH, CN, CS, CU, CZ, DD, DE, DK, EA, EE, EP, ES, FI, FR, GB, HR, HU, ID, IE, IL, IS, IT, JP, KR, LT, LU, LV, MA, OA, RU, SU, WO, MC, MD, MY, NL, NO, NZ, PH, PL, PT, RO, RS, SE, SG, SI, SK, TH, TN, TR, TW, UA, VN); FPRS; EPO; JPO; DERWENT; IBM_TDB)	OR	ON	ON	2023/12/13 05:42 PM
L2	55	bulletproof.asn.	(US-PGPUB; USPAT; USOCR; FIT (AU, AP, AT, BE, BG, BR, BY, CA, CH, CN, CS, CU, CZ, DD, DE, DK, EA, EE, EP, ES, FI, FR, GB, HR, HU, ID, IE, IL, IS, IT, JP, KR, LT, LU, LV, MA, OA, RU, SU, WO, MC, MD, MY, NL, NO, NZ, PH, PL, PT, RO, RS, SE, SG, SI, SK, TH, TN, TR, TW, UA, VN); FPRS; EPO; JPO; DERWENT; IBM_TDB)	OR	ON	ON	2023/12/13 05:43 PM
L3	3	2 AND ((forward front$4 drive) WITH (revers$3 back$4))	(US-PGPUB; USPAT; USOCR; FIT (AU, AP, AT, BE, BG, BR, BY, CA, CH, CN, CS, CU, CZ, DD, DE, DK, EA, EE, EP, ES, FI, FR, GB, HR, HU, ID, IE, IL, IS, IT, JP, KR, LT, LU, LV, MA, OA, RU, SU, WO, MC, MD, MY, NL, NO, NZ, PH, PL, PT, RO, RS, SE, SG, SI, SK, TH, TN, TR, TW, UA, VN); FPRS; EPO; JPO; DERWENT; IBM_TDB)	OR	ON	ON	2023/12/13 05:44 PM
L4	9	1 3	(US-PGPUB; USPAT; USOCR; FIT (AU, AP, AT, BE, BG, BR, BY,	OR	ON	ON	2023/12/13 05:45 PM

			CA, CH, CN, CS, CU, CZ, DD, DE, DK, EA, EE, EP, ES, FI, FR, GB, HR, HU, ID, IE, IL, IS, IT, JP, KR, LT, LU, LV, MA, OA, RU, SU, WO, MC, MD, MY, NL, NO, NZ, PH, PL, PT, RO, RS, SE, SG, SI, SK, TH, TN, TR, TW, UA, VN); FPRS; EPO; JPO; DERWENT; IBM_TDB)				
L5	8	langlotz-bennet.in.	(US-PGPUB; USPAT; USOCR; FIT (AU, AP, AT, BE, BG, BR, BY, CA, CH, CN, CS, CU, CZ, DD, DE, DK, EA, EE, EP, ES, FI, FR, GB, HR, HU, ID, IE, IL, IS, IT, JP, KR, LT, LU, LV, MA, OA, RU, SU, WO, MC, MD, MY, NL, NO, NZ, PH, PL, PT, RO, RS, SE, SG, SI, SK, TH, TN, TR, TW, UA, VN); FPRS; EPO; JPO; DERWENT; IBM_TDB)	OR	ON	ON	2023/12/13 05:45 PM
L6	17	4 5	(US-PGPUB; USPAT; USOCR; FIT (AU, AP, AT, BE, BG, BR, BY, CA, CH, CN, CS, CU, CZ, DD, DE, DK, EA, EE, EP, ES, FI, FR, GB, HR, HU, ID, IE, IL, IS, IT, JP, KR, LT, LU, LV, MA, OA, RU, SU, WO, MC, MD, MY, NL, NO, NZ, PH, PL, PT, RO, RS, SE, SG, SI, SK, TH, TN, TR, TW, UA, VN); FPRS; EPO; JPO; DERWENT; IBM_TDB)	OR	ON	ON	2023/12/13 05:50 PM
L7	67997	b60w10/02.cpc.	(US-PGPUB; USPAT; USOCR; FIT (AU, AP, AT, BE, BG, BR, BY, CA, CH, CN, CS, CU, CZ, DD, DE, DK, EA, EE, EP, ES, FI, FR, GB, HR, HU, ID, IE, IL, IS, IT, JP, KR, LT, LU, LV, MA, OA, RU, SU, WO, MC, MD, MY, NL, NO, NZ, PH, PL, PT, RO, RS, SE, SG, SI, SK,	OR	ON	ON	2023/12/13 05:50 PM

			TH, TN, TR, TW, UA, VN); FPRS; EPO; JPO; DERWENT; IBM_TDB)				
L8	15329	7 AND ((forward front$4 drive) WITH (revers$3 back$4))	(US-PGPUB; USPAT; USOCR; FIT (AP, AT, AU, BE, BG, BR, BY, CA, CH, CN, CS, CU, CZ, DD, DE, DK, EA, EE, EP, ES, FI, FR, GB, HR, HU, ID, IE, IL, IS, IT, JP, KR, LT, LU, LV, MA, MC, MD, MY, NL, NO, NZ, OA, PH, PL, PT, RO, RS, RU, SE, SG, SI, SK, SU, TH, TN, TR, TW, UA, VN, WO); FPRS; EPO; JPO; DERWENT; IBM_TDB)	OR	ON	ON	2023/12/13 05:50 PM
L9	4769	7 AND ((forward front$4 drive) WITH (revers$3 back$4) WITH ((steer$3 near4 angle) OR (park$3 near6 (tim$3 distance velocity speed)) OR (location position$3)))	(US-PGPUB; USPAT; USOCR; FIT (AP, AT, AU, BE, BG, BR, BY, CA, CH, CN, CS, CU, CZ, DD, DE, DK, EA, EE, EP, ES, FI, FR, GB, HR, HU, ID, IE, IL, IS, IT, JP, KR, LT, LU, LV, MA, MC, MD, MY, NL, NO, NZ, OA, PH, PL, PT, RO, RS, RU, SE, SG, SI, SK, SU, TH, TN, TR, TW, UA, VN, WO); FPRS; EPO; JPO; DERWENT; IBM_TDB)	OR	ON	ON	2023/12/13 05:52 PM
L10	3549	7 AND (((forward front$4 drive) near4 (revers$3 back$4)) WITH ((steer$3 near4 angle) OR (park$3 near6 (tim$3 distance velocity speed)) OR (location position$3)))	(US-PGPUB; USPAT; USOCR; FIT (AP, AT, AU, BE, BG, BR, BY, CA, CH, CN, CS, CU, CZ, DD, DE, DK, EA, EE, EP, ES, FI, FR, GB, HR, HU, ID, IE, IL, IS, IT, JP, KR, LT, LU, LV, MA, MC, MD, MY, NL, NO, NZ, OA, PH, PL, PT, RO, RS, RU, SE, SG, SI, SK, SU, TH, TN, TR, TW, UA, VN, WO); FPRS; EPO; JPO; DERWENT; IBM_TDB)	OR	ON	ON	2023/12/13 05:52 PM
L11	1822	7 AND (((forward front$4 drive) near4 (revers$3 back$4)) WITH (shift$3 chang$3)	(US-PGPUB; USPAT; USOCR; FIT (AP, AT, AU, BE, BG, BR, BY, CA, CH, CN, CS, CU,	OR	ON	ON	2023/12/13 05:53 PM

		WITH ((steer$3 near4 angle) OR (park$3 near6 (tim$3 distance velocity speed)) OR (location position$3)))	CZ, DD, DE, DK, EA, EE, EP, ES, FI, FR, GB, HR, HU, ID, IE, IL, IS, IT, JP, KR, LT, LU, LV, MA, MC, MD, MY, NL, NO, NZ, OA, PH, PL, PT, RO, RS, RU, SE, SG, SI, SK, SU, TH, TN, TR, TW, UA, VN, WO); FPRS; EPO; JPO; DERWENT; IBM_TDB)				
L12	1211	7 AND (((forward front$4 drive) near6 (revers$3 back$4) near6 (shift$3 chang$3)) WITH ((steer$3 near4 angle) OR (park$3 near6 (tim$3 distance velocity speed)) OR (location position$3)))	(US-PGPUB; USPAT; USOCR; FIT (AP, AT, AU, BE, BG, BR, BY, CA, CH, CN, CS, CU, CZ, DD, DE, DK, EA, EE, EP, ES, FI, FR, GB, HR, HU, ID, IE, IL, IS, IT, JP, KR, LT, LU, LV, MA, MC, MD, MY, NL, NO, NZ, OA, PH, PL, PT, RO, RS, RU, SE, SG, SI, SK, SU, TH, TN, TR, TW, UA, VN, WO); FPRS; EPO; JPO; DERWENT; IBM_TDB)	OR	ON	ON	2023/12/13 05:54 PM
L13	1211	7 AND (((forward front$4 drive) near6 (revers$3 back$4) near6 (shift$3 chang$3 auto$shift$3)) WITH ((steer$3 near4 angle) OR (park$3 near6 (tim$3 distance velocity speed)) OR (location position$3)))	(US-PGPUB; USPAT; USOCR; FIT (AP, AT, AU, BE, BG, BR, BY, CA, CH, CN, CS, CU, CZ, DD, DE, DK, EA, EE, EP, ES, FI, FR, GB, HR, HU, ID, IE, IL, IS, IT, JP, KR, LT, LU, LV, MA, MC, MD, MY, NL, NO, NZ, OA, PH, PL, PT, RO, RS, RU, SE, SG, SI, SK, SU, TH, TN, TR, TW, UA, VN, WO); FPRS; EPO; JPO; DERWENT; IBM_TDB)	OR	ON	ON	2023/12/13 05:55 PM
L14	1211	7 AND (((forward front$4 drive) near6 (revers$3 back$4) near6 (shift$3 chang$3 auto$shift$3 offer$3 suggest$3)) WITH ((steer$3 near4 angle) OR (park$3 near6 (tim$3 distance velocity speed)) OR (location position$3)))	(US-PGPUB; USPAT; USOCR; FIT (AP, AT, AU, BE, BG, BR, BY, CA, CH, CN, CS, CU, CZ, DD, DE, DK, EA, EE, EP, ES, FI, FR, GB, HR, HU, ID, IE, IL, IS, IT, JP, KR, LT, LU, LV, MA, MC, MD, MY, NL, NO, NZ, OA, PH, PL, PT, RO, RS, RU, SE, SG, SI, SK, SU, TH, TN, TR, TW, UA, VN,	OR	ON	ON	2023/12/13 05:56 PM

			WO); FPRS; EPO; JPO; DERWENT; IBM_TDB)				
L15	1053	7 AND (((forward front$4 drive) near6 (revers$3 back$4) near6 (shift$3 chang$3 auto$shift$3 offer$3 suggest$3)) near6 ((steer$3 near4 angle) OR (park$3 near6 (tim$3 distance velocity speed)) OR (location position$3)))	(US-PGPUB; USPAT; USOCR; FIT (AP, AT, AU, BE, BG, BR, BY, CA, CH, CN, CS, CU, CZ, DD, DE, DK, EA, EE, EP, ES, FI, FR, GB, HR, HU, ID, IE, IL, IS, IT, JP, KR, LT, LU, LV, MA, MC, MD, MY, NL, NO, NZ, OA, PH, PL, PT, RO, RS, RU, SE, SG, SI, SK, SU, TH, TN, TR, TW, UA, VN, WO); FPRS; EPO; JPO; DERWENT; IBM_TDB)	OR	ON	ON	2023/12/13 05:57 PM
L16	636	7 AND (((forward front$4 drive) near4 (revers$3 back$4) near4 (shift$3 chang$3 auto$shift$3 offer$3 suggest$3)) near4 ((steer$3 near2 angle) OR (park$3 near4 (tim$3 distance velocity speed)) OR (location position$3)))	(US-PGPUB; USPAT; USOCR; FIT (AP, AT, AU, BE, BG, BR, BY, CA, CH, CN, CS, CU, CZ, DD, DE, DK, EA, EE, EP, ES, FI, FR, GB, HR, HU, ID, IE, IL, IS, IT, JP, KR, LT, LU, LV, MA, MC, MD, MY, NL, NO, NZ, OA, PH, PL, PT, RO, RS, RU, SE, SG, SI, SK, SU, TH, TN, TR, TW, UA, VN, WO); FPRS; EPO; JPO; DERWENT; IBM_TDB)	OR	ON	ON	2023/12/13 05:57 PM
L17	29	7 AND (((forward front$4 drive) near4 (revers$3 back$4) near4 (shift$3 chang$3 auto$shift$3 offer$3 suggest$3)) near4 ((steer$3 near2 angle) OR (park$3 near4 (tim$3 distance velocity speed)) OR ((location position$3) near2 vehicle)))	(US-PGPUB; USPAT; USOCR; FIT (AP, AT, AU, BE, BG, BR, BY, CA, CH, CN, CS, CU, CZ, DD, DE, DK, EA, EE, EP, ES, FI, FR, GB, HR, HU, ID, IE, IL, IS, IT, JP, KR, LT, LU, LV, MA, MC, MD, MY, NL, NO, NZ, OA, PH, PL, PT, RO, RS, RU, SE, SG, SI, SK, SU, TH, TN, TR, TW, UA, VN, WO); FPRS; EPO; JPO; DERWENT; IBM_TDB)	OR	ON	ON	2023/12/13 05:59 PM
L18	217	7 AND (((forward front$4 drive) WITH (revers$3 back$4) WITH (shift$3 chang$3 auto$shift$3 offer$3	(US-PGPUB; USPAT; USOCR; FIT (AP, AT, AU, BE, BG, BR, BY, CA, CH, CN, CS, CU, CZ, DD, DE, DK, EA,	OR	ON	ON	2023/12/13 06:00 PM

		suggest$3)) WITH ((steer$3 near2 angle) OR (park$3 near4 (tim$3 distance velocity speed)) OR ((location position$3) near2 vehicle)))	EE, EP, ES, FI, FR, GB, HR, HU, ID, IE, IL, IS, IT, JP, KR, LT, LU, LV, MA, MC, MD, MY, NL, NO, NZ, OA, PH, PL, PT, RO, RS, RU, SE, SG, SI, SK, SU, TH, TN, TR, TW, UA, VN, WO); FPRS; EPO; JPO; DERWENT; IBM_TDB)				
L20	234	6 18	(US-PGPUB; USPAT; USOCR; FIT (AU, AP, AT, BE, BG, BR, BY, CA, CH, CN, CS, CU, CZ, DD, DE, DK, EA, EE, EP, ES, FI, FR, GB, HR, HU, ID, IE, IL, IS, IT, JP, KR, LT, LU, LV, MA, OA, RU, SU, WO, MC, MD, MY, NL, NO, NZ, PH, PL, PT, RO, RS, SE, SG, SI, SK, TH, TN, TR, TW, UA, VN); FPRS; EPO; JPO; DERWENT; IBM_TDB)	OR	ON	ON	2023/12/13 06:14 PM
L21	40542	b60w10/20.cpc.	(US-PGPUB; USPAT; USOCR; FIT (AU, AP, AT, BE, BG, BR, BY, CA, CH, CN, CS, CU, CZ, DD, DE, DK, EA, EE, EP, ES, FI, FR, GB, HR, HU, ID, IE, IL, IS, IT, JP, KR, LT, LU, LV, MA, OA, RU, SU, WO, MC, MD, MY, NL, NO, NZ, PH, PL, PT, RO, RS, SE, SG, SI, SK, TH, TN, TR, TW, UA, VN); FPRS; EPO; JPO; DERWENT; IBM_TDB)	OR	ON	ON	2023/12/13 06:14 PM
L22	484	21 AND (((forward front$4 drive) WITH (revers$3 back$4) WITH (shift$3 chang$3 auto$shift$3 offer$3 suggest$3)) WITH ((steer$3 near2 angle) OR (park$3 near4 (tim$3 distance velocity speed)) OR ((location position$3) near2 vehicle)))	(US-PGPUB; USPAT; USOCR; FIT (AP, AT, AU, BE, BG, BR, BY, CA, CH, CN, CS, CU, CZ, DD, DE, DK, EA, EE, EP, ES, FI, FR, GB, HR, HU, ID, IE, IL, IS, IT, JP, KR, LT, LU, LV, MA, MC, MD, MY, NL, NO, NZ, OA, PH, PL, PT, RO, RS, RU, SE, SG, SI, SK, SU, TH, TN, TR, TW, UA, VN, WO); FPRS; EPO;	OR	ON	ON	2023/12/13 06:14 PM

			JPO; DERWENT; IBM_TDB)				
L23	477	22 NOT 20	(US-PGPUB; USPAT; USOCR; FIT (AU, AP, AT, BE, BG, BR, BY, CA, CH, CN, CS, CU, CZ, DD, DE, DK, EA, EE, EP, ES, FI, FR, GB, HR, HU, ID, IE, IL, IS, IT, JP, KR, LT, LU, LV, MA, OA, RU, SU, WO, MC, MD, MY, NL, NO, NZ, PH, PL, PT, RO, RS, SE, SG, SI, SK, TH, TN, TR, TW, UA, VN); FPRS; EPO; JPO; DERWENT; IBM_TDB)	OR	ON	ON	2023/12/13 06:14 PM
L24	711	20 22	(US-PGPUB; USPAT; USOCR; FIT (AU, AP, AT, BE, BG, BR, BY, CA, CH, CN, CS, CU, CZ, DD, DE, DK, EA, EE, EP, ES, FI, FR, GB, HR, HU, ID, IE, IL, IS, IT, JP, KR, LT, LU, LV, MA, OA, RU, SU, WO, MC, MD, MY, NL, NO, NZ, PH, PL, PT, RO, RS, SE, SG, SI, SK, TH, TN, TR, TW, UA, VN); FPRS; EPO; JPO; DERWENT; IBM_TDB)	OR	ON	ON	2023/12/13 06:50 PM
L25	41076	b60w10/10.cpc.	(US-PGPUB; USPAT; USOCR; FIT (AU, AP, AT, BE, BG, BR, BY, CA, CH, CN, CS, CU, CZ, DD, DE, DK, EA, EE, EP, ES, FI, FR, GB, HR, HU, ID, IE, IL, IS, IT, JP, KR, LT, LU, LV, MA, OA, RU, SU, WO, MC, MD, MY, NL, NO, NZ, PH, PL, PT, RO, RS, SE, SG, SI, SK, TH, TN, TR, TW, UA, VN); FPRS; EPO; JPO; DERWENT; IBM_TDB)	OR	ON	ON	2023/12/13 06:50 PM
L26	301	25 AND (((forward front$4 drive) WITH (revers$3 back$4) WITH (shift$3 chang$3 auto$shift$3 offer$3 suggest$3)) WITH	(US-PGPUB; USPAT; USOCR; FIT (AP, AT, AU, BE, BG, BR, BY, CA, CH, CN, CS, CU, CZ, DD, DE, DK, EA, EE, EP, ES, FI, FR, GB,	OR	ON	ON	2023/12/13 06:50 PM

		((steer$3 near2 angle) OR (park$3 near4 (tim$3 distance velocity speed)) OR ((location position$3) near2 vehicle)))	HR, HU, ID, IE, IL, IS, IT, JP, KR, LT, LU, LV, MA, MC, MD, MY, NL, NO, NZ, OA, PH, PL, PT, RO, RS, RU, SE, SG, SI, SK, SU, TH, TN, TR, TW, UA, VN, WO); FPRS; EPO; JPO; DERWENT; IBM_TDB)				
L27	170	26 NOT 24	(US-PGPUB; USPAT; USOCR; FIT (AU, AP, AT, BE, BG, BR, BY, CA, CH, CN, CS, CU, CZ, DD, DE, DK, EA, EE, EP, ES, FI, FR, GB, HR, HU, ID, IE, IL, IS, IT, JP, KR, LT, LU, LV, MA, OA, RU, SU, WO, MC, MD, MY, NL, NO, NZ, PH, PL, PT, RO, RS, SE, SG, SI, SK, TH, TN, TR, TW, UA, VN); FPRS; EPO; JPO; DERWENT; IBM_TDB)	OR	ON	ON	2023/12/13 06:50 PM
L28	881	24 26	(US-PGPUB; USPAT; USOCR; FIT (AU, AP, AT, BE, BG, BR, BY, CA, CH, CN, CS, CU, CZ, DD, DE, DK, EA, EE, EP, ES, FI, FR, GB, HR, HU, ID, IE, IL, IS, IT, JP, KR, LT, LU, LV, MA, OA, RU, SU, WO, MC, MD, MY, NL, NO, NZ, PH, PL, PT, RO, RS, SE, SG, SI, SK, TH, TN, TR, TW, UA, VN); FPRS; EPO; JPO; DERWENT; IBM_TDB)	OR	ON	ON	2023/12/13 06:59 PM
L29	1024	b60w2530/201.cpc.	(US-PGPUB; USPAT; USOCR; FIT (AU, AP, AT, BE, BG, BR, BY, CA, CH, CN, CS, CU, CZ, DD, DE, DK, EA, EE, EP, ES, FI, FR, GB, HR, HU, ID, IE, IL, IS, IT, JP, KR, LT, LU, LV, MA, OA, RU, SU, WO, MC, MD, MY, NL, NO, NZ, PH, PL, PT, RO, RS, SE, SG, SI, SK, TH, TN, TR, TW, UA, VN); FPRS; EPO; JPO; DERWENT;	OR	ON	ON	2023/12/13 07:00 PM

			IBM_TDB)				
L30	11	29 AND (((forward front$4 drive) WITH (revers$3 back$4) WITH (shift$3 chang$3 auto$shift$3 offer$3 suggest$3)) WITH ((steer$3 near2 angle) OR (park$3 near4 (tim$3 distance velocity speed)) OR ((location position$3) near2 vehicle)))	(US-PGPUB; USPAT; USOCR; FIT (AP, AT, AU, BE, BG, BR, BY, CA, CH, CN, CS, CU, CZ, DD, DE, DK, EA, EE, EP, ES, FI, FR, GB, HR, HU, ID, IE, IL, IS, IT, JP, KR, LT, LU, LV, MA, MC, MD, MY, NL, NO, NZ, OA, PH, PL, PT, RO, RS, RU, SE, SG, SI, SK, SU, TH, TN, TR, TW, UA, VN, WO); FPRS; EPO; JPO; DERWENT; IBM_TDB)	OR	ON	ON	2023/12/13 07:00 PM
L31	8	30 NOT 28	(US-PGPUB; USPAT; USOCR; FIT (AU, AP, AT, BE, BG, BR, BY, CA, CH, CN, CS, CU, CZ, DD, DE, DK, EA, EE, EP, ES, FI, FR, GB, HR, HU, ID, IE, IL, IS, IT, JP, KR, LT, LU, LV, MA, OA, RU, SU, WO, MC, MD, MY, NL, NO, NZ, PH, PL, PT, RO, RS, SE, SG, SI, SK, TH, TN, TR, TW, UA, VN); FPRS; EPO; JPO; DERWENT; IBM_TDB)	OR	ON	ON	2023/12/13 07:00 PM
L32	889	28 30	(US-PGPUB; USPAT; USOCR; FIT (AU, AP, AT, BE, BG, BR, BY, CA, CH, CN, CS, CU, CZ, DD, DE, DK, EA, EE, EP, ES, FI, FR, GB, HR, HU, ID, IE, IL, IS, IT, JP, KR, LT, LU, LV, MA, OA, RU, SU, WO, MC, MD, MY, NL, NO, NZ, PH, PL, PT, RO, RS, SE, SG, SI, SK, TH, TN, TR, TW, UA, VN); FPRS; EPO; JPO; DERWENT; IBM_TDB)	OR	ON	ON	2023/12/13 08:40 PM
L33	1798	b60w2530/18.cpc.	(US-PGPUB; USPAT; USOCR; FIT (AU, AP, AT, BE, BG, BR, BY, CA, CH, CN, CS, CU, CZ, DD, DE, DK, EA, EE, EP, ES, FI, FR, GB, HR, HU, ID, IE, IL, IS,	OR	ON	ON	2023/12/13 08:40 PM

			IT, JP, KR, LT, LU, LV, MA, OA, RU, SU, WO, MC, MD, MY, NL, NO, NZ, PH, PL, PT, RO, RS, SE, SG, SI, SK, TH, TN, TR, TW, UA, VN); FPRS; EPO; JPO; DERWENT; IBM_TDB)				
L34	7	33 AND (((forward front$4 drive) WITH (revers$3 back$4) WITH (shift$3 chang$3 auto$shift$3 offer$3 suggest$3)) WITH ((steer$3 near2 angle) OR (park$3 near4 (tim$3 distance velocity speed)) OR ((location position$3) near2 vehicle)))	(US-PGPUB; USPAT; USOCR; FIT (AP, AT, AU, BE, BG, BR, BY, CA, CH, CN, CS, CU, CZ, DD, DE, DK, EA, EE, EP, ES, FI, FR, GB, HR, HU, ID, IE, IL, IS, IT, JP, KR, LT, LU, LV, MA, MC, MD, MY, NL, NO, NZ, OA, PH, PL, PT, RO, RS, RU, SE, SG, SI, SK, SU, TH, TN, TR, TW, UA, VN, WO); FPRS; EPO; JPO; DERWENT; IBM_TDB)	OR	ON	ON	2023/12/13 08:41 PM
L35	3	34 NOT 32	(US-PGPUB; USPAT; USOCR; FIT (AU, AP, AT, BE, BG, BR, BY, CA, CH, CN, CS, CU, CZ, DD, DE, DK, EA, EE, EP, ES, FI, FR, GB, HR, HU, ID, IE, IL, IS, IT, JP, KR, LT, LU, LV, MA, OA, RU, SU, WO, MC, MD, MY, NL, NO, NZ, PH, PL, PT, RO, RS, SE, SG, SI, SK, TH, TN, TR, TW, UA, VN); FPRS; EPO; JPO; DERWENT; IBM_TDB)	OR	ON	ON	2023/12/13 08:42 PM
L36	892	32 34	(US-PGPUB; USPAT; USOCR; FIT (AU, AP, AT, BE, BG, BR, BY, CA, CH, CN, CS, CU, CZ, DD, DE, DK, EA, EE, EP, ES, FI, FR, GB, HR, HU, ID, IE, IL, IS, IT, JP, KR, LT, LU, LV, MA, OA, RU, SU, WO, MC, MD, MY, NL, NO, NZ, PH, PL, PT, RO, RS, SE, SG, SI, SK, TH, TN, TR, TW, UA, VN); FPRS; EPO; JPO; DERWENT; IBM_TDB)	OR	ON	ON	2023/12/13 08:42 PM

L37	909	b60w2540/045.cpc.	(US-PGPUB; USPAT; USOCR; FIT (AU, AP, AT, BE, BG, BR, BY, CA, CH, CN, CS, CU, CZ, DD, DE, DK, EA, EE, EP, ES, FI, FR, GB, HR, HU, ID, IE, IL, IS, IT, JP, KR, LT, LU, LV, MA, OA, RU, SU, WO, MC, MD, MY, NL, NO, NZ, PH, PL, PT, RO, RS, SE, SG, SI, SK, TH, TN, TR, TW, UA, VN); FPRS; EPO; JPO; DERWENT; IBM_TDB)	OR	ON	ON	2023/12/13 08:42 PM
L38	31	37 AND (((forward front$4 drive) WITH (revers$3 back$4) WITH (shift$3 chang$3 auto$shift$3 offer$3 suggest$3)) WITH ((steer$3 near2 angle) OR (park$3 near4 (tim$3 distance velocity speed)) OR ((location position$3) near2 vehicle)))	(US-PGPUB; USPAT; USOCR; FIT (AP, AT, AU, BE, BG, BR, BY, CA, CH, CN, CS, CU, CZ, DD, DE, DK, EA, EE, EP, ES, FI, FR, GB, HR, HU, ID, IE, IL, IS, IT, JP, KR, LT, LU, LV, MA, MC, MD, MY, NL, NO, NZ, OA, PH, PL, PT, RO, RS, RU, SE, SG, SI, SK, SU, TH, TN, TR, TW, UA, VN, WO); FPRS; EPO; JPO; DERWENT; IBM_TDB)	OR	ON	ON	2023/12/13 08:42 PM
L39	31	38 NOT 36	(US-PGPUB; USPAT; USOCR; FIT (AU, AP, AT, BE, BG, BR, BY, CA, CH, CN, CS, CU, CZ, DD, DE, DK, EA, EE, EP, ES, FI, FR, GB, HR, HU, ID, IE, IL, IS, IT, JP, KR, LT, LU, LV, MA, OA, RU, SU, WO, MC, MD, MY, NL, NO, NZ, PH, PL, PT, RO, RS, SE, SG, SI, SK, TH, TN, TR, TW, UA, VN); FPRS; EPO; JPO; DERWENT; IBM_TDB)	OR	ON	ON	2023/12/13 08:43 PM
L40	923	36 38	(US-PGPUB; USPAT; USOCR; FIT (AU, AP, AT, BE, BG, BR, BY, CA, CH, CN, CS, CU, CZ, DD, DE, DK, EA, EE, EP, ES, FI, FR, GB, HR, HU, ID, IE, IL, IS, IT, JP, KR, LT, LU, LV, MA, OA, RU, SU, WO,	OR	ON	ON	2023/12/13 08:46 PM

			MC, MD, MY, NL, NO, NZ, PH, PL, PT, RO, RS, SE, SG, SI, SK, TH, TN, TR, TW, UA, VN); FPRS; EPO; JPO; DERWENT; IBM_TDB)				
L41	35060	b60w2540/12.cpc.	(US-PGPUB; USPAT; USOCR; FIT (AU, AP, AT, BE, BG, BR, BY, CA, CH, CN, CS, CU, CZ, DD, DE, DK, EA, EE, EP, ES, FI, FR, GB, HR, HU, ID, IE, IL, IS, IT, JP, KR, LT, LU, LV, MA, OA, RU, SU, WO, MC, MD, MY, NL, NO, NZ, PH, PL, PT, RO, RS, SE, SG, SI, SK, TH, TN, TR, TW, UA, VN); FPRS; EPO; JPO; DERWENT; IBM_TDB)	OR	ON	ON	2023/12/13 08:46 PM
L42	233	41 AND (((forward front$4 drive) WITH (revers$3 back$4) WITH (shift$3 chang$3 auto$shift$3 offer$3 suggest$3)) WITH ((steer$3 near2 angle) OR (park$3 near4 (tim$3 distance velocity speed)) OR ((location position$3) near2 vehicle)))	(US-PGPUB; USPAT; USOCR; FIT (AP, AT, AU, BE, BG, BR, BY, CA, CH, CN, CS, CU, CZ, DD, DE, DK, EA, EE, EP, ES, FI, FR, GB, HR, HU, ID, IE, IL, IS, IT, JP, KR, LT, LU, LV, MA, MC, MD, MY, NL, NO, NZ, OA, PH, PL, PT, RO, RS, RU, SE, SG, SI, SK, SU, TH, TN, TR, TW, UA, VN, WO); FPRS; EPO; JPO; DERWENT; IBM_TDB)	OR	ON	ON	2023/12/13 08:46 PM
L43	143	42 NOT 40	(US-PGPUB; USPAT; USOCR; FIT (AU, AP, AT, BE, BG, BR, BY, CA, CH, CN, CS, CU, CZ, DD, DE, DK, EA, EE, EP, ES, FI, FR, GB, HR, HU, ID, IE, IL, IS, IT, JP, KR, LT, LU, LV, MA, OA, RU, SU, WO, MC, MD, MY, NL, NO, NZ, PH, PL, PT, RO, RS, SE, SG, SI, SK, TH, TN, TR, TW, UA, VN); FPRS; EPO; JPO; DERWENT; IBM_TDB)	OR	ON	ON	2023/12/13 08:46 PM
L44	1066	40 42	(US-PGPUB; USPAT;	OR	ON	ON	2023/12/13

			USOCR; FIT (AU, AP, AT, BE, BG, BR, BY, CA, CH, CN, CS, CU, CZ, DD, DE, DK, EA, EE, EP, ES, FI, FR, GB, HR, HU, ID, IE, IL, IS, IT, JP, KR, LT, LU, LV, MA, OA, RU, SU, WO, MC, MD, MY, NL, NO, NZ, PH, PL, PT, RO, RS, SE, SG, SI, SK, TH, TN, TR, TW, UA, VN); FPRS; EPO; JPO; DERWENT; IBM_TDB)				09:06 PM
L45	29711	b60w2540/18.cpc.	(US-PGPUB; USPAT; USOCR; FIT (AU, AP, AT, BE, BG, BR, BY, CA, CH, CN, CS, CU, CZ, DD, DE, DK, EA, EE, EP, ES, FI, FR, GB, HR, HU, ID, IE, IL, IS, IT, JP, KR, LT, LU, LV, MA, OA, RU, SU, WO, MC, MD, MY, NL, NO, NZ, PH, PL, PT, RO, RS, SE, SG, SI, SK, TH, TN, TR, TW, UA, VN); FPRS; EPO; JPO; DERWENT; IBM_TDB)	OR	ON	ON	2023/12/13 09:06 PM
L46	298	45 AND (((forward front$4 drive) WITH (revers$3 back$4) WITH (shift$3 chang$3 auto$shift$3 offer$3 suggest$3)) WITH ((steer$3 near2 angle) OR (park$3 near4 (tim$3 distance velocity speed)) OR ((location position$3) near2 vehicle)))	(US-PGPUB; USPAT; USOCR; FIT (AP, AT, AU, BE, BG, BR, BY, CA, CH, CN, CS, CU, CZ, DD, DE, DK, EA, EE, EP, ES, FI, FR, GB, HR, HU, ID, IE, IL, IS, IT, JP, KR, LT, LU, LV, MA, MC, MD, MY, NL, NO, NZ, OA, PH, PL, PT, RO, RS, RU, SE, SG, SI, SK, SU, TH, TN, TR, TW, UA, VN, WO); FPRS; EPO; JPO; DERWENT; IBM_TDB)	OR	ON	ON	2023/12/13 09:07 PM
L47	134	46 NOT 44	(US-PGPUB; USPAT; USOCR; FIT (AU, AP, AT, BE, BG, BR, BY, CA, CH, CN, CS, CU, CZ, DD, DE, DK, EA, EE, EP, ES, FI, FR, GB, HR, HU, ID, IE, IL, IS, IT, JP, KR, LT, LU, LV, MA, OA, RU, SU, WO, MC, MD, MY, NL, NO,	OR	ON	ON	2023/12/13 09:07 PM

			NZ, PH, PL, PT, RO, RS, SE, SG, SI, SK, TH, TN, TR, TW, UA, VN); FPRS; EPO; JPO; DERWENT; IBM_TDB)				
L48	1200	44 46	(US-PGPUB; USPAT; USOCR; FIT (AU, AP, AT, BE, BG, BR, BY, CA, CH, CN, CS, CU, CZ, DD, DE, DK, EA, EE, EP, ES, FI, FR, GB, HR, HU, ID, IE, IL, IS, IT, JP, KR, LT, LU, LV, MA, OA, RU, SU, WO, MC, MD, MY, NL, NO, NZ, PH, PL, PT, RO, RS, SE, SG, SI, SK, TH, TN, TR, TW, UA, VN); FPRS; EPO; JPO; DERWENT; IBM_TDB)	OR	ON	ON	2023/12/13 09:15 PM
L49	4264	b60w2400/00.cpc.	(US-PGPUB; USPAT; USOCR; FIT (AU, AP, AT, BE, BG, BR, BY, CA, CH, CN, CS, CU, CZ, DD, DE, DK, EA, EE, EP, ES, FI, FR, GB, HR, HU, ID, IE, IL, IS, IT, JP, KR, LT, LU, LV, MA, OA, RU, SU, WO, MC, MD, MY, NL, NO, NZ, PH, PL, PT, RO, RS, SE, SG, SI, SK, TH, TN, TR, TW, UA, VN); FPRS; EPO; JPO; DERWENT; IBM_TDB)	OR	ON	ON	2023/12/13 09:16 PM
L50	24	49 AND (((forward front$4 drive) WITH (revers$3 back$4) WITH (shift$3 chang$3 auto$shift$3 offer$3 suggest$3)) WITH ((steer$3 near2 angle) OR (park$3 near4 (tim$3 distance velocity speed)) OR ((location position$3) near2 vehicle)))	(US-PGPUB; USPAT; USOCR; FIT (AP, AT, AU, BE, BG, BR, BY, CA, CH, CN, CS, CU, CZ, DD, DE, DK, EA, EE, EP, ES, FI, FR, GB, HR, HU, ID, IE, IL, IS, IT, JP, KR, LT, LU, LV, MA, MC, MD, MY, NL, NO, NZ, OA, PH, PL, PT, RO, RS, RU, SE, SG, SI, SK, SU, TH, TN, TR, TW, UA, VN, WO); FPRS; EPO; JPO; DERWENT; IBM_TDB)	OR	ON	ON	2023/12/13 09:16 PM
L51	8	50 NOT 48	(US-PGPUB; USPAT; USOCR; FIT (AU, AP,	OR	ON	ON	2023/12/13 09:16 PM

			AT, BE, BG, BR, BY, CA, CH, CN, CS, CU, CZ, DD, DE, DK, EA, EE, EP, ES, FI, FR, GB, HR, HU, ID, IE, IL, IS, IT, JP, KR, LT, LU, LV, MA, OA, RU, SU, WO, MC, MD, MY, NL, NO, NZ, PH, PL, PT, RO, RS, SE, SG, SI, SK, TH, TN, TR, TW, UA, VN); FPRS; EPO; JPO; DERWENT; IBM_TDB)				
L52	1208	48 50	(US-PGPUB; USPAT; USOCR; FIT (AU, AP, AT, BE, BG, BR, BY, CA, CH, CN, CS, CU, CZ, DD, DE, DK, EA, EE, EP, ES, FI, FR, GB, HR, HU, ID, IE, IL, IS, IT, JP, KR, LT, LU, LV, MA, OA, RU, SU, WO, MC, MD, MY, NL, NO, NZ, PH, PL, PT, RO, RS, SE, SG, SI, SK, TH, TN, TR, TW, UA, VN); FPRS; EPO; JPO; DERWENT; IBM_TDB)	OR	ON	ON	2023/12/13 09:16 PM
L53	48267	b60w2420/42.cpc.	(US-PGPUB; USPAT; USOCR; FIT (AU, AP, AT, BE, BG, BR, BY, CA, CH, CN, CS, CU, CZ, DD, DE, DK, EA, EE, EP, ES, FI, FR, GB, HR, HU, ID, IE, IL, IS, IT, JP, KR, LT, LU, LV, MA, OA, RU, SU, WO, MC, MD, MY, NL, NO, NZ, PH, PL, PT, RO, RS, SE, SG, SI, SK, TH, TN, TR, TW, UA, VN); FPRS; EPO; JPO; DERWENT; IBM_TDB)	OR	ON	ON	2023/12/13 09:17 PM
L54	227	53 AND (((forward front$4 drive) WITH (revers$3 back$4) WITH (shift$3 chang$3 auto$shift$3 offer$3 suggest$3)) WITH ((steer$3 near2 angle) OR (park$3 near4 (tim$3 distance velocity speed)) OR ((location position$3) near2	(US-PGPUB; USPAT; USOCR; FIT (AP, AT, AU, BE, BG, BR, BY, CA, CH, CN, CS, CU, CZ, DD, DE, DK, EA, EE, EP, ES, FI, FR, GB, HR, HU, ID, IE, IL, IS, IT, JP, KR, LT, LU, LV, MA, MC, MD, MY, NL, NO, NZ, OA, PH, PL, PT, RO, RS, RU, SE,	OR	ON	ON	2023/12/13 09:17 PM

		vehicle)))	SG, SI, SK, SU, TH, TN, TR, TW, UA, VN, WO); FPRS; EPO; JPO; DERWENT; IBM_TDB)				
L55	125	54 NOT 52	(US-PGPUB; USPAT; USOCR; FIT (AU, AP, AT, BE, BG, BR, BY, CA, CH, CN, CS, CU, CZ, DD, DE, DK, EA, EE, EP, ES, FI, FR, GB, HR, HU, ID, IE, IL, IS, IT, JP, KR, LT, LU, LV, MA, OA, RU, SU, WO, MC, MD, MY, NL, NO, NZ, PH, PL, PT, RO, RS, SE, SG, SI, SK, TH, TN, TR, TW, UA, VN); FPRS; EPO; JPO; DERWENT; IBM_TDB)	OR	ON	ON	2023/12/13 09:17 PM
L56	1333	52 54	(US-PGPUB; USPAT; USOCR; FIT (AU, AP, AT, BE, BG, BR, BY, CA, CH, CN, CS, CU, CZ, DD, DE, DK, EA, EE, EP, ES, FI, FR, GB, HR, HU, ID, IE, IL, IS, IT, JP, KR, LT, LU, LV, MA, OA, RU, SU, WO, MC, MD, MY, NL, NO, NZ, PH, PL, PT, RO, RS, SE, SG, SI, SK, TH, TN, TR, TW, UA, VN); FPRS; EPO; JPO; DERWENT; IBM_TDB)	OR	ON	ON	2023/12/13 09:23 PM
L57	207	b60w2510/109.cpc.	(US-PGPUB; USPAT; USOCR; FIT (AU, AP, AT, BE, BG, BR, BY, CA, CH, CN, CS, CU, CZ, DD, DE, DK, EA, EE, EP, ES, FI, FR, GB, HR, HU, ID, IE, IL, IS, IT, JP, KR, LT, LU, LV, MA, OA, RU, SU, WO, MC, MD, MY, NL, NO, NZ, PH, PL, PT, RO, RS, SE, SG, SI, SK, TH, TN, TR, TW, UA, VN); FPRS; EPO; JPO; DERWENT; IBM_TDB)	OR	ON	ON	2023/12/13 09:23 PM
L58	5	57 AND (((forward front$4 drive) WITH (revers$3 back$4)	(US-PGPUB; USPAT; USOCR; FIT (AP, AT, AU, BE, BG, BR, BY,	OR	ON	ON	2023/12/13 09:23 PM

		WITH (shift$3 chang$3 auto$shift$3 offer$3 suggest$3)) WITH ((steer$3 near2 angle) OR (park$3 near4 (tim$3 distance velocity speed)) OR ((location position$3) near2 vehicle)))	CA, CH, CN, CS, CU, CZ, DD, DE, DK, EA, EE, EP, ES, FI, FR, GB, HR, HU, ID, IE, IL, IS, IT, JP, KR, LT, LU, LV, MA, MC, MD, MY, NL, NO, NZ, OA, PH, PL, PT, RO, RS, RU, SE, SG, SI, SK, SU, TH, TN, TR, TW, UA, VN, WO); FPRS; EPO; JPO; DERWENT; IBM_TDB)				
L59	3	58 NOT 56	(US-PGPUB; USPAT; USOCR; FIT (AU, AP, AT, BE, BG, BR, BY, CA, CH, CN, CS, CU, CZ, DD, DE, DK, EA, EE, EP, ES, FI, FR, GB, HR, HU, ID, IE, IL, IS, IT, JP, KR, LT, LU, LV, MA, OA, RU, SU, WO, MC, MD, MY, NL, NO, NZ, PH, PL, PT, RO, RS, SE, SG, SI, SK, TH, TN, TR, TW, UA, VN); FPRS; EPO; JPO; DERWENT; IBM_TDB)	OR	ON	ON	2023/12/13 09:23 PM
L60	1336	56 58	(US-PGPUB; USPAT; USOCR; FIT (AU, AP, AT, BE, BG, BR, BY, CA, CH, CN, CS, CU, CZ, DD, DE, DK, EA, EE, EP, ES, FI, FR, GB, HR, HU, ID, IE, IL, IS, IT, JP, KR, LT, LU, LV, MA, OA, RU, SU, WO, MC, MD, MY, NL, NO, NZ, PH, PL, PT, RO, RS, SE, SG, SI, SK, TH, TN, TR, TW, UA, VN); FPRS; EPO; JPO; DERWENT; IBM_TDB)	OR	ON	ON	2023/12/13 09:28 PM
L61	6096	b60w2510/20.cpc.	(US-PGPUB; USPAT; USOCR; FIT (AU, AP, AT, BE, BG, BR, BY, CA, CH, CN, CS, CU, CZ, DD, DE, DK, EA, EE, EP, ES, FI, FR, GB, HR, HU, ID, IE, IL, IS, IT, JP, KR, LT, LU, LV, MA, OA, RU, SU, WO, MC, MD, MY, NL, NO, NZ, PH, PL, PT, RO, RS, SE, SG, SI, SK,	OR	ON	ON	2023/12/13 09:28 PM

			TH, TN, TR, TW, UA, VN); FPRS; EPO; JPO; DERWENT; IBM_TDB)				
L62	53	61 AND (((forward front$4 drive) WITH (revers$3 back$4) WITH (shift$3 chang$3 auto$shift$3 offer$3 suggest$3)) WITH ((steer$3 near2 angle) OR (park$3 near4 (tim$3 distance velocity speed)) OR ((location position$3) near2 vehicle)))	(US-PGPUB; USPAT; USOCR; FIT (AP, AT, AU, BE, BG, BR, BY, CA, CH, CN, CS, CU, CZ, DD, DE, DK, EA, EE, EP, ES, FI, FR, GB, HR, HU, ID, IE, IL, IS, IT, JP, KR, LT, LU, LV, MA, MC, MD, MY, NL, NO, NZ, OA, PH, PL, PT, RO, RS, RU, SE, SG, SI, SK, SU, TH, TN, TR, TW, UA, VN, WO); FPRS; EPO; JPO; DERWENT; IBM_TDB)	OR	ON	ON	2023/12/13 09:28 PM
L63	13	62 NOT 60	(US-PGPUB; USPAT; USOCR; FIT (AU, AP, AT, BE, BG, BR, BY, CA, CH, CN, CS, CU, CZ, DD, DE, DK, EA, EE, EP, ES, FI, FR, GB, HR, HU, ID, IE, IL, IS, IT, JP, KR, LT, LU, LV, MA, OA, RU, SU, WO, MC, MD, MY, NL, NO, NZ, PH, PL, PT, RO, RS, SE, SG, SI, SK, TH, TN, TR, TW, UA, VN); FPRS; EPO; JPO; DERWENT; IBM_TDB)	OR	ON	ON	2023/12/13 09:28 PM
L64	1349	60 62	(US-PGPUB; USPAT; USOCR; FIT (AU, AP, AT, BE, BG, BR, BY, CA, CH, CN, CS, CU, CZ, DD, DE, DK, EA, EE, EP, ES, FI, FR, GB, HR, HU, ID, IE, IL, IS, IT, JP, KR, LT, LU, LV, MA, OA, RU, SU, WO, MC, MD, MY, NL, NO, NZ, PH, PL, PT, RO, RS, SE, SG, SI, SK, TH, TN, TR, TW, UA, VN); FPRS; EPO; JPO; DERWENT; IBM_TDB)	OR	ON	ON	2023/12/13 10:35 PM
L65	5255	b60w2520/04.cpc.	(US-PGPUB; USPAT; USOCR; FIT (AU, AP, AT, BE, BG, BR, BY, CA, CH, CN, CS, CU,	OR	ON	ON	2023/12/13 10:36 PM

			CZ, DD, DE, DK, EA, EE, EP, ES, FI, FR, GB, HR, HU, ID, IE, IL, IS, IT, JP, KR, LT, LU, LV, MA, OA, RU, SU, WO, MC, MD, MY, NL, NO, NZ, PH, PL, PT, RO, RS, SE, SG, SI, SK, TH, TN, TR, TW, UA, VN); FPRS; EPO; JPO; DERWENT; IBM_TDB)				
L66	53	65 AND (((forward front$4 drive) WITH (revers$3 back$4) WITH (shift$3 chang$3 auto$shift$3 offer$3 suggest$3)) WITH ((steer$3 near2 angle) OR (park$3 near4 (tim$3 distance velocity speed)) OR ((location position$3) near2 vehicle)))	(US-PGPUB; USPAT; USOCR; FIT (AP, AT, AU, BE, BG, BR, BY, CA, CH, CN, CS, CU, CZ, DD, DE, DK, EA, EE, EP, ES, FI, FR, GB, HR, HU, ID, IE, IL, IS, IT, JP, KR, LT, LU, LV, MA, MC, MD, MY, NL, NO, NZ, OA, PH, PL, PT, RO, RS, RU, SE, SG, SI, SK, SU, TH, TN, TR, TW, UA, VN, WO); FPRS; EPO; JPO; DERWENT; IBM_TDB)	OR	ON	ON	2023/12/13 10:36 PM
L67	11	66 NOT 64	(US-PGPUB; USPAT; USOCR; FIT (AU, AP, AT, BE, BG, BR, BY, CA, CH, CN, CS, CU, CZ, DD, DE, DK, EA, EE, EP, ES, FI, FR, GB, HR, HU, ID, IE, IL, IS, IT, JP, KR, LT, LU, LV, MA, OA, RU, SU, WO, MC, MD, MY, NL, NO, NZ, PH, PL, PT, RO, RS, SE, SG, SI, SK, TH, TN, TR, TW, UA, VN); FPRS; EPO; JPO; DERWENT; IBM_TDB)	OR	ON	ON	2023/12/13 10:36 PM
L68	1360	64 66	(US-PGPUB; USPAT; USOCR; FIT (AU, AP, AT, BE, BG, BR, BY, CA, CH, CN, CS, CU, CZ, DD, DE, DK, EA, EE, EP, ES, FI, FR, GB, HR, HU, ID, IE, IL, IS, IT, JP, KR, LT, LU, LV, MA, OA, RU, SU, WO, MC, MD, MY, NL, NO, NZ, PH, PL, PT, RO, RS, SE, SG, SI, SK, TH, TN, TR, TW, UA,	OR	ON	ON	2023/12/13 10:41 PM

			VN); FPRS; EPO; JPO; DERWENT; IBM_TDB)				
L69	7352	b60w2520/06.cpc.	(US-PGPUB; USPAT; USOCR; FIT (AU, AP, AT, BE, BG, BR, BY, CA, CH, CN, CS, CU, CZ, DD, DE, DK, EA, EE, EP, ES, FI, FR, GB, HR, HU, ID, IE, IL, IS, IT, JP, KR, LT, LU, LV, MA, OA, RU, SU, WO, MC, MD, MY, NL, NO, NZ, PH, PL, PT, RO, RS, SE, SG, SI, SK, TH, TN, TR, TW, UA, VN); FPRS; EPO; JPO; DERWENT; IBM_TDB)	OR	ON	ON	2023/12/13 10:42 PM
L70	146	69 AND (((forward front$4 drive) WITH (revers$3 back$4) WITH (shift$3 chang$3 auto$shift$3 offer$3 suggest$3)) WITH ((steer$3 near2 angle) OR (park$3 near4 (tim$3 distance velocity speed)) OR ((location position$3) near2 vehicle)))	(US-PGPUB; USPAT; USOCR; FIT (AP, AT, AU, BE, BG, BR, BY, CA, CH, CN, CS, CU, CZ, DD, DE, DK, EA, EE, EP, ES, FI, FR, GB, HR, HU, ID, IE, IL, IS, IT, JP, KR, LT, LU, LV, MA, MC, MD, MY, NL, NO, NZ, OA, PH, PL, PT, RO, RS, RU, SE, SG, SI, SK, SU, TH, TN, TR, TW, UA, VN, WO); FPRS; EPO; JPO; DERWENT; IBM_TDB)	OR	ON	ON	2023/12/13 10:42 PM
L71	60	70 NOT 68	(US-PGPUB; USPAT; USOCR; FIT (AU, AP, AT, BE, BG, BR, BY, CA, CH, CN, CS, CU, CZ, DD, DE, DK, EA, EE, EP, ES, FI, FR, GB, HR, HU, ID, IE, IL, IS, IT, JP, KR, LT, LU, LV, MA, OA, RU, SU, WO, MC, MD, MY, NL, NO, NZ, PH, PL, PT, RO, RS, SE, SG, SI, SK, TH, TN, TR, TW, UA, VN); FPRS; EPO; JPO; DERWENT; IBM_TDB)	OR	ON	ON	2023/12/13 10:42 PM
L72	1420	68 70	(US-PGPUB; USPAT; USOCR; FIT (AU, AP, AT, BE, BG, BR, BY, CA, CH, CN, CS, CU, CZ, DD, DE, DK, EA,	OR	ON	ON	2023/12/13 11:06 PM

			EE, EP, ES, FI, FR, GB, HR, HU, ID, IE, IL, IS, IT, JP, KR, LT, LU, LV, MA, OA, RU, SU, WO, MC, MD, MY, NL, NO, NZ, PH, PL, PT, RO, RS, SE, SG, SI, SK, TH, TN, TR, TW, UA, VN); FPRS; EPO; JPO; DERWENT; IBM_TDB)				
L73	82394	b60w2520/10.cpc.	(US-PGPUB; USPAT; USOCR; FIT (AU, AP, AT, BE, BG, BR, BY, CA, CH, CN, CS, CU, CZ, DD, DE, DK, EA, EE, EP, ES, FI, FR, GB, HR, HU, ID, IE, IL, IS, IT, JP, KR, LT, LU, LV, MA, OA, RU, SU, WO, MC, MD, MY, NL, NO, NZ, PH, PL, PT, RO, RS, SE, SG, SI, SK, TH, TN, TR, TW, UA, VN); FPRS; EPO; JPO; DERWENT; IBM_TDB)	OR	ON	ON	2023/12/13 11:07 PM
L74	520	73 AND (((forward front$4 drive) WITH (revers$3 back$4) WITH (shift$3 chang$3 auto$shift$3 offer$3 suggest$3)) WITH ((steer$3 near2 angle) OR (park$3 near4 (tim$3 distance velocity speed)) OR ((location position$3) near2 vehicle)))	(US-PGPUB; USPAT; USOCR; FIT (AP, AT, AU, BE, BG, BR, BY, CA, CH, CN, CS, CU, CZ, DD, DE, DK, EA, EE, EP, ES, FI, FR, GB, HR, HU, ID, IE, IL, IS, IT, JP, KR, LT, LU, LV, MA, MC, MD, MY, NL, NO, NZ, OA, PH, PL, PT, RO, RS, RU, SE, SG, SI, SK, SU, TH, TN, TR, TW, UA, VN, WO); FPRS; EPO; JPO; DERWENT; IBM_TDB)	OR	ON	ON	2023/12/13 11:07 PM
L75	181	74 NOT 72	(US-PGPUB; USPAT; USOCR; FIT (AU, AP, AT, BE, BG, BR, BY, CA, CH, CN, CS, CU, CZ, DD, DE, DK, EA, EE, EP, ES, FI, FR, GB, HR, HU, ID, IE, IL, IS, IT, JP, KR, LT, LU, LV, MA, OA, RU, SU, WO, MC, MD, MY, NL, NO, NZ, PH, PL, PT, RO, RS, SE, SG, SI, SK, TH, TN, TR, TW, UA, VN); FPRS; EPO;	OR	ON	ON	2023/12/13 11:07 PM

			JPO; DERWENT; IBM_TDB)				
L76	1601	72 74	(US-PGPUB; USPAT; USOCR; FIT (AU, AP, AT, BE, BG, BR, BY, CA, CH, CN, CS, CU, CZ, DD, DE, DK, EA, EE, EP, ES, FI, FR, GB, HR, HU, ID, IE, IL, IS, IT, JP, KR, LT, LU, LV, MA, OA, RU, SU, WO, MC, MD, MY, NL, NO, NZ, PH, PL, PT, RO, RS, SE, SG, SI, SK, TH, TN, TR, TW, UA, VN); FPRS; EPO; JPO; DERWENT; IBM_TDB)	OR	ON	ON	2023/12/13 11:20 PM
L77	135	b60w2710/1094.cpc.	(US-PGPUB; USPAT; USOCR; FIT (AU, AP, AT, BE, BG, BR, BY, CA, CH, CN, CS, CU, CZ, DD, DE, DK, EA, EE, EP, ES, FI, FR, GB, HR, HU, ID, IE, IL, IS, IT, JP, KR, LT, LU, LV, MA, OA, RU, SU, WO, MC, MD, MY, NL, NO, NZ, PH, PL, PT, RO, RS, SE, SG, SI, SK, TH, TN, TR, TW, UA, VN); FPRS; EPO; JPO; DERWENT; IBM_TDB)	OR	ON	ON	2023/12/13 11:21 PM
L78	4	77 AND (((forward front$4 drive) WITH (revers$3 back$4) WITH (shift$3 chang$3 auto$shift$3 offer$3 suggest$3)) WITH ((steer$3 near2 angle) OR (park$3 near4 (tim$3 distance velocity speed)) OR ((location position$3) near2 vehicle)))	(US-PGPUB; USPAT; USOCR; FIT (AP, AT, AU, BE, BG, BR, BY, CA, CH, CN, CS, CU, CZ, DD, DE, DK, EA, EE, EP, ES, FI, FR, GB, HR, HU, ID, IE, IL, IS, IT, JP, KR, LT, LU, LV, MA, MC, MD, MY, NL, NO, NZ, OA, PH, PL, PT, RO, RS, RU, SE, SG, SI, SK, SU, TH, TN, TR, TW, UA, VN, WO); FPRS; EPO; JPO; DERWENT; IBM_TDB)	OR	ON	ON	2023/12/13 11:21 PM
L79	1603	76 78	(US-PGPUB; USPAT; USOCR; FIT (AU, AP, AT, BE, BG, BR, BY, CA, CH, CN, CS, CU, CZ, DD, DE, DK, EA, EE, EP, ES, FI, FR, GB,	OR	ON	ON	2023/12/13 11:22 PM

			HR, HU, ID, IE, IL, IS, IT, JP, KR, LT, LU, LV, MA, OA, RU, SU, WO, MC, MD, MY, NL, NO, NZ, PH, PL, PT, RO, RS, SE, SG, SI, SK, TH, TN, TR, TW, UA, VN); FPRS; EPO; JPO; DERWENT; IBM_TDB)				
L80	4446	b60w2710/207.cpc.	(US-PGPUB; USPAT; USOCR; FIT (AU, AP, AT, BE, BG, BR, BY, CA, CH, CN, CS, CU, CZ, DD, DE, DK, EA, EE, EP, ES, FI, FR, GB, HR, HU, ID, IE, IL, IS, IT, JP, KR, LT, LU, LV, MA, OA, RU, SU, WO, MC, MD, MY, NL, NO, NZ, PH, PL, PT, RO, RS, SE, SG, SI, SK, TH, TN, TR, TW, UA, VN); FPRS; EPO; JPO; DERWENT; IBM_TDB)	OR	ON	ON	2023/12/13 11:22 PM
L81	76	80 AND (((forward front$4 drive) WITH (revers$3 back$4) WITH (shift$3 chang$3 auto$shift$3 offer$3 suggest$3)) WITH ((steer$3 near2 angle) OR (park$3 near4 (tim$3 distance velocity speed)) OR ((location position$3) near2 vehicle)))	(US-PGPUB; USPAT; USOCR; FIT (AP, AT, AU, BE, BG, BR, BY, CA, CH, CN, CS, CU, CZ, DD, DE, DK, EA, EE, EP, ES, FI, FR, GB, HR, HU, ID, IE, IL, IS, IT, JP, KR, LT, LU, LV, MA, MC, MD, MY, NL, NO, NZ, OA, PH, PL, PT, RO, RS, RU, SE, SG, SI, SK, SU, TH, TN, TR, TW, UA, VN, WO); FPRS; EPO; JPO; DERWENT; IBM_TDB)	OR	ON	ON	2023/12/13 11:22 PM
L82	5	81 NOT 79	(US-PGPUB; USPAT; USOCR; FIT (AU, AP, AT, BE, BG, BR, BY, CA, CH, CN, CS, CU, CZ, DD, DE, DK, EA, EE, EP, ES, FI, FR, GB, HR, HU, ID, IE, IL, IS, IT, JP, KR, LT, LU, LV, MA, OA, RU, SU, WO, MC, MD, MY, NL, NO, NZ, PH, PL, PT, RO, RS, SE, SG, SI, SK, TH, TN, TR, TW, UA, VN); FPRS; EPO; JPO; DERWENT;	OR	ON	ON	2023/12/13 11:22 PM

			IBM_TDB)				
L83	1608	79 81	(US-PGPUB; USPAT; USOCR; FIT (AU, AP, AT, BE, BG, BR, BY, CA, CH, CN, CS, CU, CZ, DD, DE, DK, EA, EE, EP, ES, FI, FR, GB, HR, HU, ID, IE, IL, IS, IT, JP, KR, LT, LU, LV, MA, OA, RU, SU, WO, MC, MD, MY, NL, NO, NZ, PH, PL, PT, RO, RS, SE, SG, SI, SK, TH, TN, TR, TW, UA, VN); FPRS; EPO; JPO; DERWENT; IBM_TDB)	OR	ON	ON	2023/12/13 11:37 PM
L84	2779	b60w2720/24.cpc.	(US-PGPUB; USPAT; USOCR; FIT (AU, AP, AT, BE, BG, BR, BY, CA, CH, CN, CS, CU, CZ, DD, DE, DK, EA, EE, EP, ES, FI, FR, GB, HR, HU, ID, IE, IL, IS, IT, JP, KR, LT, LU, LV, MA, OA, RU, SU, WO, MC, MD, MY, NL, NO, NZ, PH, PL, PT, RO, RS, SE, SG, SI, SK, TH, TN, TR, TW, UA, VN); FPRS; EPO; JPO; DERWENT; IBM_TDB)	OR	ON	ON	2023/12/13 11:37 PM
L85	17	84 AND (((forward front$4 drive) WITH (revers$3 back$4) WITH (shift$3 chang$3 auto$shift$3 offer$3 suggest$3)) WITH ((steer$3 near2 angle) OR (park$3 near4 (tim$3 distance velocity speed)) OR ((location position$3) near2 vehicle)))	(US-PGPUB; USPAT; USOCR; FIT (AP, AT, AU, BE, BG, BR, BY, CA, CH, CN, CS, CU, CZ, DD, DE, DK, EA, EE, EP, ES, FI, FR, GB, HR, HU, ID, IE, IL, IS, IT, JP, KR, LT, LU, LV, MA, MC, MD, MY, NL, NO, NZ, OA, PH, PL, PT, RO, RS, RU, SE, SG, SI, SK, SU, TH, TN, TR, TW, UA, VN, WO); FPRS; EPO; JPO; DERWENT; IBM_TDB)	OR	ON	ON	2023/12/13 11:37 PM
L86	1	85 NOT 83	(US-PGPUB; USPAT; USOCR; FIT (AU, AP, AT, BE, BG, BR, BY, CA, CH, CN, CS, CU, CZ, DD, DE, DK, EA, EE, EP, ES, FI, FR, GB, HR, HU, ID, IE, IL, IS,	OR	ON	ON	2023/12/13 11:38 PM

			IT, JP, KR, LT, LU, LV, MA, OA, RU, SU, WO, MC, MD, MY, NL, NO, NZ, PH, PL, PT, RO, RS, SE, SG, SI, SK, TH, TN, TR, TW, UA, VN); FPRS; EPO; JPO; DERWENT; IBM_TDB)				
L88	1609	83 85	(US-PGPUB; USPAT; USOCR; FIT (AU, AP, AT, BE, BG, BR, BY, CA, CH, CN, CS, CU, CZ, DD, DE, DK, EA, EE, EP, ES, FI, FR, GB, HR, HU, ID, IE, IL, IS, IT, JP, KR, LT, LU, LV, MA, OA, RU, SU, WO, MC, MD, MY, NL, NO, NZ, PH, PL, PT, RO, RS, SE, SG, SI, SK, TH, TN, TR, TW, UA, VN); FPRS; EPO; JPO; DERWENT; IBM_TDB)	OR	ON	ON	2023/12/13 11:38 PM
L89	20153	(((forward front$4 drive) WITH (revers$3 back$4) WITH (shift$3 chang$3 auto$shift$3 offer$3 suggest$3)) WITH ((steer$3 near2 angle) OR (park$3 near4 (tim$3 distance velocity speed)) OR ((location position$3) near2 vehicle)))	(US-PGPUB; USPAT; USOCR; FIT (AP, AT, AU, BE, BG, BR, BY, CA, CH, CN, CS, CU, CZ, DD, DE, DK, EA, EE, EP, ES, FI, FR, GB, HR, HU, ID, IE, IL, IS, IT, JP, KR, LT, LU, LV, MA, MC, MD, MY, NL, NO, NZ, OA, PH, PL, PT, RO, RS, RU, SE, SG, SI, SK, SU, TH, TN, TR, TW, UA, VN, WO); FPRS; EPO; JPO; DERWENT; IBM_TDB)	OR	ON	ON	2023/12/13 11:38 PM
L90	1634	(((forward front$4 drive) near4 (revers$3 back$4) near4 (shift$3 chang$3 auto$shift$3 offer$3 suggest$3)) near4 ((steer$3 near2 angle) OR (park$3 near4 (tim$3 distance velocity speed)) OR ((location position$3) near2 vehicle)))	(US-PGPUB; USPAT; USOCR; FIT (AP, AT, AU, BE, BG, BR, BY, CA, CH, CN, CS, CU, CZ, DD, DE, DK, EA, EE, EP, ES, FI, FR, GB, HR, HU, ID, IE, IL, IS, IT, JP, KR, LT, LU, LV, MA, MC, MD, MY, NL, NO, NZ, OA, PH, PL, PT, RO, RS, RU, SE, SG, SI, SK, SU, TH, TN, TR, TW, UA, VN, WO); FPRS; EPO; JPO; DERWENT; IBM_TDB)	OR	ON	ON	2023/12/13 11:39 PM

L91	1450	90 NOT 88	(US-PGPUB; USPAT; USOCR; FIT (AU, AP, AT, BE, BG, BR, BY, CA, CH, CN, CS, CU, CZ, DD, DE, DK, EA, EE, EP, ES, FI, FR, GB, HR, HU, ID, IE, IL, IS, IT, JP, KR, LT, LU, LV, MA, OA, RU, SU, WO, MC, MD, MY, NL, NO, NZ, PH, PL, PT, RO, RS, SE, SG, SI, SK, TH, TN, TR, TW, UA, VN); FPRS; EPO; JPO; DERWENT; IBM_TDB)	OR	ON	ON	2023/12/13 11:39 PM
L92	1399	91 AND (vehicle automobile automotive car truck suv)	(US-PGPUB; USPAT; USOCR; FIT (AU, AP, AT, BE, BG, BR, BY, CA, CH, CN, CS, CU, CZ, DD, DE, DK, EA, EE, EP, ES, FI, FR, GB, HR, HU, ID, IE, IL, IS, IT, JP, KR, LT, LU, LV, MA, OA, RU, SU, WO, MC, MD, MY, NL, NO, NZ, PH, PL, PT, RO, RS, SE, SG, SI, SK, TH, TN, TR, TW, UA, VN); FPRS; EPO; JPO; DERWENT; IBM_TDB)	OR	ON	ON	2023/12/13 11:39 PM
L93	3008	88 92	(US-PGPUB; USPAT; USOCR; FIT (AU, AP, AT, BE, BG, BR, BY, CA, CH, CN, CS, CU, CZ, DD, DE, DK, EA, EE, EP, ES, FI, FR, GB, HR, HU, ID, IE, IL, IS, IT, JP, KR, LT, LU, LV, MA, OA, RU, SU, WO, MC, MD, MY, NL, NO, NZ, PH, PL, PT, RO, RS, SE, SG, SI, SK, TH, TN, TR, TW, UA, VN); FPRS; EPO; JPO; DERWENT; IBM_TDB)	OR	ON	ON	2023/12/14 12:53 PM
L94	9	("2021/0300349" | "2020/0404192" | "2016/0075329").urpn. AND (PGPB | USPT | USOC).dbnm.	(US-PGPUB; USPAT; USOCR)	OR	ON	ON	2023/12/14 12:53 PM
L95	0	93 AND @pd>"20231213"	(US-PGPUB; USPAT; USOCR; FIT (AU, AP, AT, BE, BG, BR, BY,	OR	ON	ON	2023/12/20 02:07 PM

			CA, CH, CN, CS, CU, CZ, DD, DE, DK, EA, EE, EP, ES, FI, FR, GB, HR, HU, ID, IE, IL, IS, IT, JP, KR, LT, LU, LV, MA, OA, RU, SU, WO, MC, MD, MY, NL, NO, NZ, PH, PL, PT, RO, RS, SE, SG, SI, SK, TH, TN, TR, TW, UA, VN); FPRS; EPO; JPO; DERWENT; IBM_TDB)				
L96	2	"11932230".pn.	(US-PGPUB; USPAT; USOCR; FIT (AU, AP, AT, BE, BG, BR, BY, CA, CH, CN, CS, CU, CZ, DD, DE, DK, EA, EE, EP, ES, FI, FR, GB, HR, HU, ID, IE, IL, IS, IT, JP, KR, LT, LU, LV, MA, OA, RU, SU, WO, MC, MD, MY, NL, NO, NZ, PH, PL, PT, RO, RS, SE, SG, SI, SK, TH, TN, TR, TW, UA, VN); FPRS; EPO; JPO; DERWENT; IBM_TDB)	OR	ON	ON	2024/11/26 04:15 PM
L97	4	("20110080305" OR "20130144492" OR "20200207334" OR "20210269019").pn.	(US-PGPUB; USPAT)	OR	ON	ON	2024/11/26 04:57 PM
L98	3347	((drive forward) WITH revers$3 WITH shift WITH ((driver user operator) near4 (select$3 choos$3 choice activat$3)))	(US-PGPUB; USPAT; USOCR; FIT (AU, AP, AT, BE, BG, BR, BY, CA, CH, CN, CS, CU, CZ, DD, DE, DK, EA, EE, EP, ES, FI, FR, GB, HR, HU, ID, IE, IL, IS, IT, JP, KR, LT, LU, LV, MA, OA, RU, SU, WO, MC, MD, MY, NL, NO, NZ, PH, PL, PT, RO, RS, SE, SG, SI, SK, TH, TN, TR, TW, UA, VN); FPRS; EPO; JPO; DERWENT; IBM_TDB)	OR	ON	ON	2024/11/26 05:22 PM
L99	3840	((drive forward) WITH revers$3 WITH shift$3 WITH ((driver user operator) near4 (select$3 choos$3 choice activat$3)))	(US-PGPUB; USPAT; USOCR; FIT (AU, AP, AT, BE, BG, BR, BY, CA, CH, CN, CS, CU, CZ, DD, DE, DK, EA, EE, EP, ES, FI, FR, GB, HR, HU, ID, IE, IL, IS,	OR	ON	ON	2024/11/26 05:23 PM

			IT, JP, KR, LT, LU, LV, MA, OA, RU, SU, WO, MC, MD, MY, NL, NO, NZ, PH, PL, PT, RO, RS, SE, SG, SI, SK, TH, TN, TR, TW, UA, VN); FPRS; EPO; JPO; DERWENT; IBM_TDB)				
L100	3911	((drive forward) WITH revers$3 WITH shift$3 WITH ((driver user operator) near4 (select$3 choos$3 choice activat$3 confirm$3)))	(US-PGPUB; USPAT; USOCR; FIT (AU, AP, AT, BE, BG, BR, BY, CA, CH, CN, CS, CU, CZ, DD, DE, DK, EA, EE, EP, ES, FI, FR, GB, HR, HU, ID, IE, IL, IS, IT, JP, KR, LT, LU, LV, MA, OA, RU, SU, WO, MC, MD, MY, NL, NO, NZ, PH, PL, PT, RO, RS, SE, SG, SI, SK, TH, TN, TR, TW, UA, VN); FPRS; EPO; JPO; DERWENT; IBM_TDB)	OR	ON	ON	2024/11/26 05:23 PM
L101	2773	(((drive forward) near4 revers$3) WITH shift$3 WITH ((driver user operator) near4 (select$3 choos$3 choice activat$3 confirm$3)))	(US-PGPUB; USPAT; USOCR; FIT (AU, AP, AT, BE, BG, BR, BY, CA, CH, CN, CS, CU, CZ, DD, DE, DK, EA, EE, EP, ES, FI, FR, GB, HR, HU, ID, IE, IL, IS, IT, JP, KR, LT, LU, LV, MA, OA, RU, SU, WO, MC, MD, MY, NL, NO, NZ, PH, PL, PT, RO, RS, SE, SG, SI, SK, TH, TN, TR, TW, UA, VN); FPRS; EPO; JPO; DERWENT; IBM_TDB)	OR	ON	ON	2024/11/26 05:24 PM
L102	569	(((drive forward) near4 revers$3) WITH (automatic$4 autonomous$2) WITH shift$3 WITH ((driver user operator) near4 (select$3 choos$3 choice activat$3 confirm$3)))	(US-PGPUB; USPAT; USOCR; FIT (AU, AP, AT, BE, BG, BR, BY, CA, CH, CN, CS, CU, CZ, DD, DE, DK, EA, EE, EP, ES, FI, FR, GB, HR, HU, ID, IE, IL, IS, IT, JP, KR, LT, LU, LV, MA, OA, RU, SU, WO, MC, MD, MY, NL, NO, NZ, PH, PL, PT, RO, RS, SE, SG, SI, SK, TH, TN, TR, TW, UA, VN); FPRS; EPO; JPO; DERWENT; IBM_TDB)	OR	ON	ON	2024/11/26 05:27 PM

L103	169	(((drive forward) near4 revers$3) WITH semi$2automatic$4 WITH shift$3 WITH ((driver user operator) near4 (select$3 choos$3 choice activat$3 confirm$3)))	(US-PGPUB; USPAT; USOCR; FIT (AU, AP, AT, BE, BG, BR, BY, CA, CH, CN, CS, CU, CZ, DD, DE, DK, EA, EE, EP, ES, FI, FR, GB, HR, HU, ID, IE, IL, IS, IT, JP, KR, LT, LU, LV, MA, OA, RU, SU, WO, MC, MD, MY, NL, NO, NZ, PH, PL, PT, RO, RS, SE, SG, SI, SK, TH, TN, TR, TW, UA, VN); FPRS; EPO; JPO; DERWENT; IBM_TDB)	OR	ON	ON	2024/11/26 08:19 PM
L104	0	103 NOT 102	(US-PGPUB; USPAT; USOCR; FIT (AU, AP, AT, BE, BG, BR, BY, CA, CH, CN, CS, CU, CZ, DD, DE, DK, EA, EE, EP, ES, FI, FR, GB, HR, HU, ID, IE, IL, IS, IT, JP, KR, LT, LU, LV, MA, OA, RU, SU, WO, MC, MD, MY, NL, NO, NZ, PH, PL, PT, RO, RS, SE, SG, SI, SK, TH, TN, TR, TW, UA, VN); FPRS; EPO; JPO; DERWENT; IBM_TDB)	OR	ON	ON	2024/11/26 08:19 PM
L105	183	(((drive forward) near4 revers$3) WITH semi$2automatic$4 WITH ((driver user operator) near4 (select$3 choos$3 choice activat$3 confirm$3)))	(US-PGPUB; USPAT; USOCR; FIT (AP, AT, AU, BE, BG, BR, BY, CA, CH, CN, CS, CU, CZ, DD, DE, DK, EA, EE, EP, ES, FI, FR, GB, HR, HU, ID, IE, IL, IS, IT, JP, KR, LT, LU, LV, MA, MC, MD, MY, NL, NO, NZ, OA, PH, PL, PT, RO, RS, RU, SE, SG, SI, SK, SU, TH, TN, TR, TW, UA, VN, WO); FPRS; EPO; JPO; DERWENT; IBM_TDB)	OR	ON	ON	2024/11/26 08:19 PM
L106	14	105 NOT 102	(US-PGPUB; USPAT; USOCR; FIT (AU, AP, AT, BE, BG, BR, BY, CA, CH, CN, CS, CU, CZ, DD, DE, DK, EA, EE, EP, ES, FI, FR, GB, HR, HU, ID, IE, IL, IS, IT, JP, KR, LT, LU, LV, MA, OA, RU, SU, WO,	OR	ON	ON	2024/11/26 08:19 PM

			MC, MD, MY, NL, NO, NZ, PH, PL, PT, RO, RS, SE, SG, SI, SK, TH, TN, TR, TW, UA, VN); FPRS; EPO; JPO; DERWENT; IBM_TDB)				
L107	583	102 105	(US-PGPUB; USPAT; USOCR; FIT (AU, AP, AT, BE, BG, BR, BY, CA, CH, CN, CS, CU, CZ, DD, DE, DK, EA, EE, EP, ES, FI, FR, GB, HR, HU, ID, IE, IL, IS, IT, JP, KR, LT, LU, LV, MA, OA, RU, SU, WO, MC, MD, MY, NL, NO, NZ, PH, PL, PT, RO, RS, SE, SG, SI, SK, TH, TN, TR, TW, UA, VN); FPRS; EPO; JPO; DERWENT; IBM_TDB)	OR	ON	ON	2024/11/26 08:35 PM
L108	2	(((drive forward) near4 revers$3) WITH auto$park$3 WITH ((driver user operator) near4 (select$3 choos$3 choice activat$3 confirm$3)))	(US-PGPUB; USPAT; USOCR; FIT (AP, AT, AU, BE, BG, BR, BY, CA, CH, CN, CS, CU, CZ, DD, DE, DK, EA, EE, EP, ES, FI, FR, GB, HR, HU, ID, IE, IL, IS, IT, JP, KR, LT, LU, LV, MA, MC, MD, MY, NL, NO, NZ, OA, PH, PL, PT, RO, RS, RU, SE, SG, SI, SK, SU, TH, TN, TR, TW, UA, VN, WO); FPRS; EPO; JPO; DERWENT; IBM_TDB)	OR	ON	ON	2024/11/26 08:41 PM
L109	585	107 108	(US-PGPUB; USPAT; USOCR; FIT (AU, AP, AT, BE, BG, BR, BY, CA, CH, CN, CS, CU, CZ, DD, DE, DK, EA, EE, EP, ES, FI, FR, GB, HR, HU, ID, IE, IL, IS, IT, JP, KR, LT, LU, LV, MA, OA, RU, SU, WO, MC, MD, MY, NL, NO, NZ, PH, PL, PT, RO, RS, SE, SG, SI, SK, TH, TN, TR, TW, UA, VN); FPRS; EPO; JPO; DERWENT; IBM_TDB)	OR	ON	ON	2024/11/26 08:41 PM
L110	2	(((drive forward) WITH	(US-PGPUB; USPAT;	OR	ON	ON	2024/11/26

		revers$3) WITH auto$park$3 WITH ((driver user operator) near4 (select$3 choos$3 choice activat$3 confirm$3)))	USOCR; FIT (AP, AT, AU, BE, BG, BR, BY, CA, CH, CN, CS, CU, CZ, DD, DE, DK, EA, EE, EP, ES, FI, FR, GB, HR, HU, ID, IE, IL, IS, IT, JP, KR, LT, LU, LV, MA, MC, MD, MY, NL, NO, NZ, OA, PH, PL, PT, RO, RS, RU, SE, SG, SI, SK, SU, TH, TN, TR, TW, UA, VN, WO); FPRS; EPO; JPO; DERWENT; IBM_TDB)				08:41 PM
L111	4	(((drive forward) WITH revers$3) WITH auto$park$3 WITH (select$3 choos$3 choice activat$3 confirm$3 prompt$3))	(US-PGPUB; USPAT; USOCR; FIT (AP, AT, AU, BE, BG, BR, BY, CA, CH, CN, CS, CU, CZ, DD, DE, DK, EA, EE, EP, ES, FI, FR, GB, HR, HU, ID, IE, IL, IS, IT, JP, KR, LT, LU, LV, MA, MC, MD, MY, NL, NO, NZ, OA, PH, PL, PT, RO, RS, RU, SE, SG, SI, SK, SU, TH, TN, TR, TW, UA, VN, WO); FPRS; EPO; JPO; DERWENT; IBM_TDB)	OR	ON	ON	2024/11/26 08:43 PM
L112	587	109 110 111	(US-PGPUB; USPAT; USOCR; FIT (AU, AP, AT, BE, BG, BR, BY, CA, CH, CN, CS, CU, CZ, DD, DE, DK, EA, EE, EP, ES, FI, FR, GB, HR, HU, ID, IE, IL, IS, IT, JP, KR, LT, LU, LV, MA, OA, RU, SU, WO, MC, MD, MY, NL, NO, NZ, PH, PL, PT, RO, RS, SE, SG, SI, SK, TH, TN, TR, TW, UA, VN); FPRS; EPO; JPO; DERWENT; IBM_TDB)	OR	ON	ON	2024/11/26 08:50 PM
L113	3450	tesla.asn.	(US-PGPUB; USPAT; USOCR; FIT (AU, AP, AT, BE, BG, BR, BY, CA, CH, CN, CS, CU, CZ, DD, DE, DK, EA, EE, EP, ES, FI, FR, GB, HR, HU, ID, IE, IL, IS, IT, JP, KR, LT, LU, LV, MA, OA, RU, SU, WO, MC, MD, MY, NL, NO,	OR	ON	ON	2024/11/26 08:55 PM

			NZ, PH, PL, PT, RO, RS, SE, SG, SI, SK, TH, TN, TR, TW, UA, VN); FPRS; EPO; JPO; DERWENT; IBM_TDB)				
L114	0	113 AND (auto$2shift$3)	(US-PGPUB; USPAT; USOCR; FIT (AU, AP, AT, BE, BG, BR, BY, CA, CH, CN, CS, CU, CZ, DD, DE, DK, EA, EE, EP, ES, FI, FR, GB, HR, HU, ID, IE, IL, IS, IT, JP, KR, LT, LU, LV, MA, OA, RU, SU, WO, MC, MD, MY, NL, NO, NZ, PH, PL, PT, RO, RS, SE, SG, SI, SK, TH, TN, TR, TW, UA, VN); FPRS; EPO; JPO; DERWENT; IBM_TDB)	OR	ON	ON	2024/11/26 08:56 PM
L115	276	113 AND (shift$3)	(US-PGPUB; USPAT; USOCR; FIT (AU, AP, AT, BE, BG, BR, BY, CA, CH, CN, CS, CU, CZ, DD, DE, DK, EA, EE, EP, ES, FI, FR, GB, HR, HU, ID, IE, IL, IS, IT, JP, KR, LT, LU, LV, MA, OA, RU, SU, WO, MC, MD, MY, NL, NO, NZ, PH, PL, PT, RO, RS, SE, SG, SI, SK, TH, TN, TR, TW, UA, VN); FPRS; EPO; JPO; DERWENT; IBM_TDB)	OR	ON	ON	2024/11/26 09:15 PM
L116	1	113 AND (shift$3 WITH forward WITH revers$3)	(US-PGPUB; USPAT; USOCR; FIT (AU, AP, AT, BE, BG, BR, BY, CA, CH, CN, CS, CU, CZ, DD, DE, DK, EA, EE, EP, ES, FI, FR, GB, HR, HU, ID, IE, IL, IS, IT, JP, KR, LT, LU, LV, MA, OA, RU, SU, WO, MC, MD, MY, NL, NO, NZ, PH, PL, PT, RO, RS, SE, SG, SI, SK, TH, TN, TR, TW, UA, VN); FPRS; EPO; JPO; DERWENT; IBM_TDB)	OR	ON	ON	2024/11/26 09:15 PM
L117	14	113 AND (forward WITH revers$3)	(US-PGPUB; USPAT; USOCR; FIT (AU, AP,	OR	ON	ON	2024/11/26 09:37 PM

			AT, BE, BG, BR, BY, CA, CH, CN, CS, CU, CZ, DD, DE, DK, EA, EE, EP, ES, FI, FR, GB, HR, HU, ID, IE, IL, IS, IT, JP, KR, LT, LU, LV, MA, OA, RU, SU, WO, MC, MD, MY, NL, NO, NZ, PH, PL, PT, RO, RS, SE, SG, SI, SK, TH, TN, TR, TW, UA, VN); FPRS; EPO; JPO; DERWENT; IBM_TDB)				
L118	871	112 115 116 117	(US-PGPUB; USPAT; USOCR; FIT (AU, AP, AT, BE, BG, BR, BY, CA, CH, CN, CS, CU, CZ, DD, DE, DK, EA, EE, EP, ES, FI, FR, GB, HR, HU, ID, IE, IL, IS, IT, JP, KR, LT, LU, LV, MA, OA, RU, SU, WO, MC, MD, MY, NL, NO, NZ, PH, PL, PT, RO, RS, SE, SG, SI, SK, TH, TN, TR, TW, UA, VN); FPRS; EPO; JPO; DERWENT; IBM_TDB)	OR	ON	ON	2024/11/27 10:16 PM
L119	601	112 116 117	(US-PGPUB; USPAT; USOCR; FIT (AU, AP, AT, BE, BG, BR, BY, CA, CH, CN, CS, CU, CZ, DD, DE, DK, EA, EE, EP, ES, FI, FR, GB, HR, HU, ID, IE, IL, IS, IT, JP, KR, LT, LU, LV, MA, OA, RU, SU, WO, MC, MD, MY, NL, NO, NZ, PH, PL, PT, RO, RS, SE, SG, SI, SK, TH, TN, TR, TW, UA, VN); FPRS; EPO; JPO; DERWENT; IBM_TDB)	OR	ON	ON	2024/11/27 10:18 PM
L120	5	119 AND @pd>"20231213"	(US-PGPUB; USPAT; USOCR; FIT (AU, AP, AT, BE, BG, BR, BY, CA, CH, CN, CS, CU, CZ, DD, DE, DK, EA, EE, EP, ES, FI, FR, GB, HR, HU, ID, IE, IL, IS, IT, JP, KR, LT, LU, LV, MA, OA, RU, SU, WO, MC, MD, MY, NL, NO, NZ, PH, PL, PT, RO,	OR	ON	ON	2024/11/27 10:18 PM

			RS, SE, SG, SI, SK, TH, TN, TR, TW, UA, VN); FPRS; EPO; JPO; DERWENT; IBM_TDB)				
L121	43601	b60w10/10.cpc.	(US-PGPUB; USPAT; USOCR; FIT (AU, AP, AT, BE, BG, BR, BY, CA, CH, CN, CS, CU, CZ, DD, DE, DK, EA, EE, EP, ES, FI, FR, GB, HR, HU, ID, IE, IL, IS, IT, JP, KR, LT, LU, LV, MA, OA, RU, SU, WO, MC, MD, MY, NL, NO, NZ, PH, PL, PT, RO, RS, SE, SG, SI, SK, TH, TN, TR, TW, UA, VN); FPRS; EPO; JPO; DERWENT; IBM_TDB)	OR	ON	ON	2024/11/27 10:18 PM
L122	10	121 AND (((drive forward) near4 revers$3) WITH semi$2automatic$4 WITH ((driver user operator) near4 (select$3 choos$3 choice activat$3 confirm$3)))	(US-PGPUB; USPAT; USOCR; FIT (AP, AT, AU, BE, BG, BR, BY, CA, CH, CN, CS, CU, CZ, DD, DE, DK, EA, EE, EP, ES, FI, FR, GB, HR, HU, ID, IE, IL, IS, IT, JP, KR, LT, LU, LV, MA, MC, MD, MY, NL, NO, NZ, OA, PH, PL, PT, RO, RS, RU, SE, SG, SI, SK, SU, TH, TN, TR, TW, UA, VN, WO); FPRS; EPO; JPO; DERWENT; IBM_TDB)	OR	ON	ON	2024/11/27 10:22 PM
L123	601	119 122	(US-PGPUB; USPAT; USOCR; FIT (AU, AP, AT, BE, BG, BR, BY, CA, CH, CN, CS, CU, CZ, DD, DE, DK, EA, EE, EP, ES, FI, FR, GB, HR, HU, ID, IE, IL, IS, IT, JP, KR, LT, LU, LV, MA, OA, RU, SU, WO, MC, MD, MY, NL, NO, NZ, PH, PL, PT, RO, RS, SE, SG, SI, SK, TH, TN, TR, TW, UA, VN); FPRS; EPO; JPO; DERWENT; IBM_TDB)	OR	ON	ON	2024/11/27 10:22 PM
L124	44907	b60w10/20.cpc.	(US-PGPUB; USPAT; USOCR; FIT (AU, AP, AT, BE, BG, BR, BY,	OR	ON	ON	2024/11/27 10:22 PM

			CA, CH, CN, CS, CU, CZ, DD, DE, DK, EA, EE, EP, ES, FI, FR, GB, HR, HU, ID, IE, IL, IS, IT, JP, KR, LT, LU, LV, MA, OA, RU, SU, WO, MC, MD, MY, NL, NO, NZ, PH, PL, PT, RO, RS, SE, SG, SI, SK, TH, TN, TR, TW, UA, VN); FPRS; EPO; JPO; DERWENT; IBM_TDB)				
L125	1	124 AND (((drive forward) near4 revers$3) WITH semi$2automatic$4 WITH ((driver user operator) near4 (select$3 choos$3 choice activat$3 confirm$3)))	(US-PGPUB; USPAT; USOCR; FIT (AP, AT, AU, BE, BG, BR, BY, CA, CH, CN, CS, CU, CZ, DD, DE, DK, EA, EE, EP, ES, FI, FR, GB, HR, HU, ID, IE, IL, IS, IT, JP, KR, LT, LU, LV, MA, MC, MD, MY, NL, NO, NZ, OA, PH, PL, PT, RO, RS, RU, SE, SG, SI, SK, SU, TH, TN, TR, TW, UA, VN, WO); FPRS; EPO; JPO; DERWENT; IBM_TDB)	OR	ON	ON	2024/11/27 10:22 PM
L126	601	123 125	(US-PGPUB; USPAT; USOCR; FIT (AU, AP, AT, BE, BG, BR, BY, CA, CH, CN, CS, CU, CZ, DD, DE, DK, EA, EE, EP, ES, FI, FR, GB, HR, HU, ID, IE, IL, IS, IT, JP, KR, LT, LU, LV, MA, OA, RU, SU, WO, MC, MD, MY, NL, NO, NZ, PH, PL, PT, RO, RS, SE, SG, SI, SK, TH, TN, TR, TW, UA, VN); FPRS; EPO; JPO; DERWENT; IBM_TDB)	OR	ON	ON	2024/11/27 10:22 PM
L127	6146	b60w30/18009.cpc.	(US-PGPUB; USPAT; USOCR; FIT (AU, AP, AT, BE, BG, BR, BY, CA, CH, CN, CS, CU, CZ, DD, DE, DK, EA, EE, EP, ES, FI, FR, GB, HR, HU, ID, IE, IL, IS, IT, JP, KR, LT, LU, LV, MA, OA, RU, SU, WO, MC, MD, MY, NL, NO, NZ, PH, PL, PT, RO, RS, SE, SG, SI, SK,	OR	ON	ON	2024/11/27 10:22 PM

			TH, TN, TR, TW, UA, VN); FPRS; EPO; JPO; DERWENT; IBM_TDB)				
L128	0	127 AND (((drive forward) near4 revers$3) WITH semi$2automatic$4 WITH ((driver user operator) near4 (select$3 choos$3 choice activat$3 confirm$3)))	(US-PGPUB; USPAT; USOCR; FIT (AP, AT, AU, BE, BG, BR, BY, CA, CH, CN, CS, CU, CZ, DD, DE, DK, EA, EE, EP, ES, FI, FR, GB, HR, HU, ID, IE, IL, IS, IT, JP, KR, LT, LU, LV, MA, MC, MD, MY, NL, NO, NZ, OA, PH, PL, PT, RO, RS, RU, SE, SG, SI, SK, SU, TH, TN, TR, TW, UA, VN, WO); FPRS; EPO; JPO; DERWENT; IBM_TDB)	OR	ON	ON	2024/11/27 10:22 PM
L129	601	126 128	(US-PGPUB; USPAT; USOCR; FIT (AU, AP, AT, BE, BG, BR, BY, CA, CH, CN, CS, CU, CZ, DD, DE, DK, EA, EE, EP, ES, FI, FR, GB, HR, HU, ID, IE, IL, IS, IT, JP, KR, LT, LU, LV, MA, OA, RU, SU, WO, MC, MD, MY, NL, NO, NZ, PH, PL, PT, RO, RS, SE, SG, SI, SK, TH, TN, TR, TW, UA, VN); FPRS; EPO; JPO; DERWENT; IBM_TDB)	OR	ON	ON	2024/11/27 10:23 PM
L130	20050	b60w50/082.cpc.	(US-PGPUB; USPAT; USOCR; FIT (AU, AP, AT, BE, BG, BR, BY, CA, CH, CN, CS, CU, CZ, DD, DE, DK, EA, EE, EP, ES, FI, FR, GB, HR, HU, ID, IE, IL, IS, IT, JP, KR, LT, LU, LV, MA, OA, RU, SU, WO, MC, MD, MY, NL, NO, NZ, PH, PL, PT, RO, RS, SE, SG, SI, SK, TH, TN, TR, TW, UA, VN); FPRS; EPO; JPO; DERWENT; IBM_TDB)	OR	ON	ON	2024/11/27 10:23 PM
L131	0	130 AND (((drive forward) near4 revers$3) WITH semi$2automatic$4	(US-PGPUB; USPAT; USOCR; FIT (AP, AT, AU, BE, BG, BR, BY, CA, CH, CN, CS, CU,	OR	ON	ON	2024/11/27 10:23 PM

		WITH ((driver user operator) near4 (select$3 choos$3 choice activat$3 confirm$3)))	CZ, DD, DE, DK, EA, EE, EP, ES, FI, FR, GB, HR, HU, ID, IE, IL, IS, IT, JP, KR, LT, LU, LV, MA, MC, MD, MY, NL, NO, NZ, OA, PH, PL, PT, RO, RS, RU, SE, SG, SI, SK, SU, TH, TN, TR, TW, UA, VN, WO); FPRS; EPO; JPO; DERWENT; IBM_TDB)				
L132	601	129 131	(US-PGPUB; USPAT; USOCR; FIT (AU, AP, AT, BE, BG, BR, BY, CA, CH, CN, CS, CU, CZ, DD, DE, DK, EA, EE, EP, ES, FI, FR, GB, HR, HU, ID, IE, IL, IS, IT, JP, KR, LT, LU, LV, MA, OA, RU, SU, WO, MC, MD, MY, NL, NO, NZ, PH, PL, PT, RO, RS, SE, SG, SI, SK, TH, TN, TR, TW, UA, VN); FPRS; EPO; JPO; DERWENT; IBM_TDB)	OR	ON	ON	2024/11/27 10:23 PM
L133	16455	b60w50/10.cpc.	(US-PGPUB; USPAT; USOCR; FIT (AU, AP, AT, BE, BG, BR, BY, CA, CH, CN, CS, CU, CZ, DD, DE, DK, EA, EE, EP, ES, FI, FR, GB, HR, HU, ID, IE, IL, IS, IT, JP, KR, LT, LU, LV, MA, OA, RU, SU, WO, MC, MD, MY, NL, NO, NZ, PH, PL, PT, RO, RS, SE, SG, SI, SK, TH, TN, TR, TW, UA, VN); FPRS; EPO; JPO; DERWENT; IBM_TDB)	OR	ON	ON	2024/11/27 10:23 PM
L134	1	133 AND (((drive forward) near4 revers$3) WITH semi$2automatic$4 WITH ((driver user operator) near4 (select$3 choos$3 choice activat$3 confirm$3)))	(US-PGPUB; USPAT; USOCR; FIT (AP, AT, AU, BE, BG, BR, BY, CA, CH, CN, CS, CU, CZ, DD, DE, DK, EA, EE, EP, ES, FI, FR, GB, HR, HU, ID, IE, IL, IS, IT, JP, KR, LT, LU, LV, MA, MC, MD, MY, NL, NO, NZ, OA, PH, PL, PT, RO, RS, RU, SE, SG, SI, SK, SU, TH, TN, TR, TW, UA, VN,	OR	ON	ON	2024/11/27 10:23 PM

			WO); FPRS; EPO; JPO; DERWENT; IBM_TDB)				
L135	601	132 134	(US-PGPUB; USPAT; USOCR; FIT (AU, AP, AT, BE, BG, BR, BY, CA, CH, CN, CS, CU, CZ, DD, DE, DK, EA, EE, EP, ES, FI, FR, GB, HR, HU, ID, IE, IL, IS, IT, JP, KR, LT, LU, LV, MA, OA, RU, SU, WO, MC, MD, MY, NL, NO, NZ, PH, PL, PT, RO, RS, SE, SG, SI, SK, TH, TN, TR, TW, UA, VN); FPRS; EPO; JPO; DERWENT; IBM_TDB)	OR	ON	ON	2024/11/27 10:23 PM
L136	37774	b60w2540/12.cpc.	(US-PGPUB; USPAT; USOCR; FIT (AU, AP, AT, BE, BG, BR, BY, CA, CH, CN, CS, CU, CZ, DD, DE, DK, EA, EE, EP, ES, FI, FR, GB, HR, HU, ID, IE, IL, IS, IT, JP, KR, LT, LU, LV, MA, OA, RU, SU, WO, MC, MD, MY, NL, NO, NZ, PH, PL, PT, RO, RS, SE, SG, SI, SK, TH, TN, TR, TW, UA, VN); FPRS; EPO; JPO; DERWENT; IBM_TDB)	OR	ON	ON	2024/11/27 10:24 PM
L137	7	136 AND (((drive forward) near4 revers$3) WITH semi$2automatic$4 WITH ((driver user operator) near4 (select$3 choos$3 choice activat$3 confirm$3)))	(US-PGPUB; USPAT; USOCR; FIT (AP, AT, AU, BE, BG, BR, BY, CA, CH, CN, CS, CU, CZ, DD, DE, DK, EA, EE, EP, ES, FI, FR, GB, HR, HU, ID, IE, IL, IS, IT, JP, KR, LT, LU, LV, MA, MC, MD, MY, NL, NO, NZ, OA, PH, PL, PT, RO, RS, RU, SE, SG, SI, SK, SU, TH, TN, TR, TW, UA, VN, WO); FPRS; EPO; JPO; DERWENT; IBM_TDB)	OR	ON	ON	2024/11/27 10:24 PM
L138	601	135 137	(US-PGPUB; USPAT; USOCR; FIT (AU, AP, AT, BE, BG, BR, BY, CA, CH, CN, CS, CU, CZ, DD, DE, DK, EA,	OR	ON	ON	2024/11/27 10:24 PM

			EE, EP, ES, FI, FR, GB, HR, HU, ID, IE, IL, IS, IT, JP, KR, LT, LU, LV, MA, OA, RU, SU, WO, MC, MD, MY, NL, NO, NZ, PH, PL, PT, RO, RS, SE, SG, SI, SK, TH, TN, TR, TW, UA, VN); FPRS; EPO; JPO; DERWENT; IBM_TDB)				
L139	12339	g08g1/22.cpc.	(US-PGPUB; USPAT; USOCR; FIT (AU, AP, AT, BE, BG, BR, BY, CA, CH, CN, CS, CU, CZ, DD, DE, DK, EA, EE, EP, ES, FI, FR, GB, HR, HU, ID, IE, IL, IS, IT, JP, KR, LT, LU, LV, MA, OA, RU, SU, WO, MC, MD, MY, NL, NO, NZ, PH, PL, PT, RO, RS, SE, SG, SI, SK, TH, TN, TR, TW, UA, VN); FPRS; EPO; JPO; DERWENT; IBM_TDB)	OR	ON	ON	2024/11/27 10:24 PM
L140	0	139 AND (((drive forward) near4 revers$3) WITH semi$2automatic$4 WITH ((driver user operator) near4 (select$3 choos$3 choice activat$3 confirm$3)))	(US-PGPUB; USPAT; USOCR; FIT (AP, AT, AU, BE, BG, BR, BY, CA, CH, CN, CS, CU, CZ, DD, DE, DK, EA, EE, EP, ES, FI, FR, GB, HR, HU, ID, IE, IL, IS, IT, JP, KR, LT, LU, LV, MA, MC, MD, MY, NL, NO, NZ, OA, PH, PL, PT, RO, RS, RU, SE, SG, SI, SK, SU, TH, TN, TR, TW, UA, VN, WO); FPRS; EPO; JPO; DERWENT; IBM_TDB)	OR	ON	ON	2024/11/27 10:24 PM
L141	601	138 140	(US-PGPUB; USPAT; USOCR; FIT (AU, AP, AT, BE, BG, BR, BY, CA, CH, CN, CS, CU, CZ, DD, DE, DK, EA, EE, EP, ES, FI, FR, GB, HR, HU, ID, IE, IL, IS, IT, JP, KR, LT, LU, LV, MA, OA, RU, SU, WO, MC, MD, MY, NL, NO, NZ, PH, PL, PT, RO, RS, SE, SG, SI, SK, TH, TN, TR, TW, UA, VN); FPRS; EPO;	OR	ON	ON	2024/11/27 10:24 PM

			JPO; DERWENT; IBM_TDB)				
L142	10	langlotz-bennet.in.	(US-PGPUB; USPAT; USOCR; FIT (AU, AP, AT, BE, BG, BR, BY, CA, CH, CN, CS, CU, CZ, DD, DE, DK, EA, EE, EP, ES, FI, FR, GB, HR, HU, ID, IE, IL, IS, IT, JP, KR, LT, LU, LV, MA, OA, RU, SU, WO, MC, MD, MY, NL, NO, NZ, PH, PL, PT, RO, RS, SE, SG, SI, SK, TH, TN, TR, TW, UA, VN); FPRS; EPO; JPO; DERWENT; IBM_TDB)	OR	ON	ON	2024/11/27 10:27 PM
L143	611	141 142	(US-PGPUB; USPAT; USOCR; FIT (AU, AP, AT, BE, BG, BR, BY, CA, CH, CN, CS, CU, CZ, DD, DE, DK, EA, EE, EP, ES, FI, FR, GB, HR, HU, ID, IE, IL, IS, IT, JP, KR, LT, LU, LV, MA, OA, RU, SU, WO, MC, MD, MY, NL, NO, NZ, PH, PL, PT, RO, RS, SE, SG, SI, SK, TH, TN, TR, TW, UA, VN); FPRS; EPO; JPO; DERWENT; IBM_TDB)	OR	ON	ON	2024/11/27 10:30 PM
L144	3	"18928131"	(US-PGPUB; USPAT; USOCR; FIT (AU, AP, AT, BE, BG, BR, BY, CA, CH, CN, CS, CU, CZ, DD, DE, DK, EA, EE, EP, ES, FI, FR, GB, HR, HU, ID, IE, IL, IS, IT, JP, KR, LT, LU, LV, MA, OA, RU, SU, WO, MC, MD, MY, NL, NO, NZ, PH, PL, PT, RO, RS, SE, SG, SI, SK, TH, TN, TR, TW, UA, VN); FPRS; EPO; JPO; DERWENT; IBM_TDB)	OR	ON	ON	2024/11/30 01:15 PM
L145	614	143 144	(US-PGPUB; USPAT; USOCR; FIT (AU, AP, AT, BE, BG, BR, BY, CA, CH, CN, CS, CU, CZ, DD, DE, DK, EA, EE, EP, ES, FI, FR, GB,	OR	ON	ON	2024/11/30 01:15 PM

			HR, HU, ID, IE, IL, IS, IT, JP, KR, LT, LU, LV, MA, OA, RU, SU, WO, MC, MD, MY, NL, NO, NZ, PH, PL, PT, RO, RS, SE, SG, SI, SK, TH, TN, TR, TW, UA, VN); FPRS; EPO; JPO; DERWENT; IBM_TDB)				
L146	4811	(shift$3 WITH ((drive forward) near4 reverse) WITH steer$3)	(US-PGPUB; USPAT; USOCR; FIT (AU, AP, AT, BE, BG, BR, BY, CA, CH, CN, CS, CU, CZ, DD, DE, DK, EA, EE, EP, ES, FI, FR, GB, HR, HU, ID, IE, IL, IS, IT, JP, KR, LT, LU, LV, MA, OA, RU, SU, WO, MC, MD, MY, NL, NO, NZ, PH, PL, PT, RO, RS, SE, SG, SI, SK, TH, TN, TR, TW, UA, VN); FPRS; EPO; JPO; DERWENT; IBM_TDB)	OR	ON	ON	2024/11/30 01:17 PM
L147	269	(shift$3 WITH ((drive forward) near4 reverse) WITH steer$3) AND autonomous$2	(US-PGPUB; USPAT; USOCR; FIT (AU, AP, AT, BE, BG, BR, BY, CA, CH, CN, CS, CU, CZ, DD, DE, DK, EA, EE, EP, ES, FI, FR, GB, HR, HU, ID, IE, IL, IS, IT, JP, KR, LT, LU, LV, MA, OA, RU, SU, WO, MC, MD, MY, NL, NO, NZ, PH, PL, PT, RO, RS, SE, SG, SI, SK, TH, TN, TR, TW, UA, VN); FPRS; EPO; JPO; DERWENT; IBM_TDB)	OR	ON	ON	2024/11/30 01:18 PM
L148	267	147 NOT 145	(US-PGPUB; USPAT; USOCR; FIT (AU, AP, AT, BE, BG, BR, BY, CA, CH, CN, CS, CU, CZ, DD, DE, DK, EA, EE, EP, ES, FI, FR, GB, HR, HU, ID, IE, IL, IS, IT, JP, KR, LT, LU, LV, MA, OA, RU, SU, WO, MC, MD, MY, NL, NO, NZ, PH, PL, PT, RO, RS, SE, SG, SI, SK, TH, TN, TR, TW, UA, VN); FPRS; EPO; JPO; DERWENT;	OR	ON	ON	2024/11/30 01:18 PM

			IBM_TDB)				
L149	881	145 147	(US-PGPUB; USPAT; USOCR; FIT (AU, AP, AT, BE, BG, BR, BY, CA, CH, CN, CS, CU, CZ, DD, DE, DK, EA, EE, EP, ES, FI, FR, GB, HR, HU, ID, IE, IL, IS, IT, JP, KR, LT, LU, LV, MA, OA, RU, SU, WO, MC, MD, MY, NL, NO, NZ, PH, PL, PT, RO, RS, SE, SG, SI, SK, TH, TN, TR, TW, UA, VN); FPRS; EPO; JPO; DERWENT; IBM_TDB)	OR	ON	ON	2024/11/30 02:10 PM
L150	1	"18403221"	(US-PGPUB; USPAT; USOCR; FIT (AU, AP, AT, BE, BG, BR, BY, CA, CH, CN, CS, CU, CZ, DD, DE, DK, EA, EE, EP, ES, FI, FR, GB, HR, HU, ID, IE, IL, IS, IT, JP, KR, LT, LU, LV, MA, OA, RU, SU, WO, MC, MD, MY, NL, NO, NZ, PH, PL, PT, RO, RS, SE, SG, SI, SK, TH, TN, TR, TW, UA, VN); FPRS; EPO; JPO; DERWENT; IBM_TDB)	OR	ON	ON	2024/11/30 02:11 PM
L151	13	(shift$3 WITH ((drive forward) near4 reverse) WITH steer$3 WITH brak$3 WITH (sequence pattern))	(US-PGPUB; USPAT; USOCR; FIT (AP, AT, AU, BE, BG, BR, BY, CA, CH, CN, CS, CU, CZ, DD, DE, DK, EA, EE, EP, ES, FI, FR, GB, HR, HU, ID, IE, IL, IS, IT, JP, KR, LT, LU, LV, MA, MC, MD, MY, NL, NO, NZ, OA, PH, PL, PT, RO, RS, RU, SE, SG, SI, SK, SU, TH, TN, TR, TW, UA, VN, WO); FPRS; EPO; JPO; DERWENT; IBM_TDB)	OR	ON	ON	2024/12/02 04:30 PM

PE2E SEARCH - Search History (Interference)

Ref #	Hits	Search Query	DBs	Default Operator	Plurals	British Equivalents	Time Stamp
N1	29	(((forward front$4 drive) near4 (revers$3	(US-PGPUB; USPAT)	OR	ON	ON	2023/12/14 01:10 PM

		back$4) near4 (shift$3 chang$3 auto$shift$3 offer$3 suggest$3)) near4 ((steer$3 near2 angle) OR (park$3 near4 (tim$3 distance velocity speed)) OR ((location position$3) near2 vehicle))).clm.					
N2	0	N1 AND @pd>"20231213"	(US-PGPUB; USPAT)	OR	ON	ON	2023/12/20 02:09 PM
N3	2	N1 AND @pd>"20231212"	(US-PGPUB; USPAT)	OR	ON	ON	2024/11/27 10:31 PM
N4	0	(shift$3 WITH ((drive forward) near4 reverse) WITH steer$3 WITH brak$3 WITH (sequence pattern)).clm.	(US-PGPUB; USPAT)	OR	ON	ON	2024/12/02 04:31 PM

Bibliographic Data

Application No: 18/928,135

Foreign Priority claimed: ○ Yes ◉ No

35 USC 119 (a-d) conditions met: ☐ Yes ☑ No | ☐ Met After Allowance

Verified and Acknowledged: /Edwin A Young/ (Examiner's Signature) | (Initials)

Title: VEHICLE GEAR SELECTION CONTROL

FILING or 371(c) DATE	CLASS	GROUP ART UNIT	ATTORNEY DOCKET NO.
10/27/2024 **RULE**	701	3655	BKL-11C5

APPLICANTS

Bulletproof Property Management, LLC, Cheyenne, WY, UNITED STATES

INVENTORS

Bennet Langlotz, Dallas, TX, UNITED STATES

CONTINUING DATA

This application is a CON of 18403221 01/03/2024

18403221 is a CIP of 18205823 06/05/2023 PAT 11932230

FOREIGN APPLICATIONS

IF REQUIRED, FOREIGN LICENSE GRANTED**

10/29/2024

** **SMALL ENTITY** **

STATE OR COUNTRY

UNITED STATES

ADDRESS

LANGLOTZ PATENT & TRADEMARK WORKS, LLC
PO BOX 660675 #37585
Dallas, TX 75266-0675
UNITED STATES

FILING FEE RECEIVED

$2,400

UNITED STATES PATENT AND TRADEMARK OFFICE

UNITED STATES DEPARTMENT OF COMMERCE
United States Patent and Trademark Office
Address: COMMISSIONER FOR PATENTS
P.O. Box 1450
Alexandria, Virginia 22313-1450
www.uspto.gov

APPLICATION NO.	FILING DATE	FIRST NAMED INVENTOR	ATTORNEY DOCKET NO.	CONFIRMATION NO.
18/928,135	10/27/2024	Bennet Langlotz	BKL-11C5	1124

25917 7590 12/09/2024
LANGLOTZ PATENT & TRADEMARK WORKS, LLC
PO BOX 660675 #37585
Dallas, TX 75266-0675

EXAMINER
YOUNG, EDWIN

ART UNIT	PAPER NUMBER
3655	

NOTIFICATION DATE	DELIVERY MODE
12/09/2024	ELECTRONIC

Please find below and/or attached an Office communication concerning this application or proceeding.

The time period for reply, if any, is set in the attached communication.

Notice of the Office communication was sent electronically on above-indicated "Notification Date" to the following e-mail address(es):

pair@langlotz.com

PTOL-90A (Rev. 04/07)

Office Action Summary	Application No. 18/928,135	Applicant(s) Langlotz, Bennet	
	Examiner EDWIN YOUNG	Art Unit 3655	AIA (FITF) Status Yes

-- The MAILING DATE of this communication appears on the cover sheet with the correspondence address --

Period for Reply

A SHORTENED STATUTORY PERIOD FOR REPLY IS SET TO EXPIRE 3 MONTHS FROM THE MAILING DATE OF THIS COMMUNICATION.

- Extensions of time may be available under the provisions of 37 CFR 1.136(a). In no event, however, may a reply be timely filed after SIX (6) MONTHS from the mailing date of this communication.
- If NO period for reply is specified above, the maximum statutory period will apply and will expire SIX (6) MONTHS from the mailing date of this communication.
- Failure to reply within the set or extended period for reply will, by statute, cause the application to become ABANDONED (35 U.S.C. § 133). Any reply received by the Office later than three months after the mailing date of this communication, even if timely filed, may reduce any earned patent term adjustment. See 37 CFR 1.704(b).

Status

1)☑ Responsive to communication(s) filed on 10/27/2024.

☐ A declaration(s)/affidavit(s) under **37 CFR 1.130(b)** was/were filed on _____.

2a)☐ This action is **FINAL.** 2b) ☑ This action is non-final.

3)☐ An election was made by the applicant in response to a restriction requirement set forth during the interview on _____; the restriction requirement and election have been incorporated into this action.

4)☐ Since this application is in condition for allowance except for formal matters, prosecution as to the merits is closed in accordance with the practice under *Ex parte Quayle*, 1935 C.D. 11, 453 O.G. 213.

Disposition of Claims*

5) ☑ Claim(s) 1-14 is/are pending in the application.

5a) Of the above claim(s) _____ is/are withdrawn from consideration.

6) ☐ Claim(s) _____ is/are allowed.

7) ☑ Claim(s) 1-14 is/are rejected.

8) ☐ Claim(s) _____ is/are objected to.

9) ☐ Claim(s) _____ are subject to restriction and/or election requirement

* If any claims have been determined allowable, you may be eligible to benefit from the **Patent Prosecution Highway** program at a participating intellectual property office for the corresponding application. For more information, please see http://www.uspto.gov/patents/init_events/pph/index.jsp or send an inquiry to **PPHfeedback@uspto.gov.**

Application Papers

10)☐ The specification is objected to by the Examiner.

11)☑ The drawing(s) filed on 10/27/2024 is/are: a)☑ accepted or b)☐ objected to by the Examiner.

Applicant may not request that any objection to the drawing(s) be held in abeyance. See 37 CFR 1.85(a).

Replacement drawing sheet(s) including the correction is required if the drawing(s) is objected to. See 37 CFR 1.121(d).

Priority under 35 U.S.C. § 119

12)☐ Acknowledgment is made of a claim for foreign priority under 35 U.S.C. § 119(a)-(d) or (f).

Certified copies:

a)☐ All b)☐ Some** c)☐ None of the:

1.☐ Certified copies of the priority documents have been received.

2.☐ Certified copies of the priority documents have been received in Application No. _____.

3.☐ Copies of the certified copies of the priority documents have been received in this National Stage application from the International Bureau (PCT Rule 17.2(a)).

** See the attached detailed Office action for a list of the certified copies not received.

Attachment(s)

1) ☑ Notice of References Cited (PTO-892)

2) ☑ Information Disclosure Statement(s) (PTO/SB/08a and/or PTO/SB/08b) Paper No(s)/Mail Date 10/27/2024.

3) ☐ Interview Summary (PTO-413) Paper No(s)/Mail Date _____.

4) ☐ Other: _____.

DETAILED ACTION

Notice of Pre-AIA or AIA Status

The present application, filed on or after March 16, 2013, is being examined under the first inventor to file provisions of the AIA.

This is the first action on the merits for application 18/928,135. Claims 1-14 are currently pending in this application.

Information Disclosure Statement

The information disclosure statement (IDS) submitted on 10/27/2024 has been considered by the examiner.

Claim Rejections - 35 USC § 112

The following is a quotation of 35 U.S.C. 112(b):

> (b) CONCLUSION.—The specification shall conclude with one or more claims particularly pointing out and distinctly claiming the subject matter which the inventor or a joint inventor regards as the invention.

The following is a quotation of 35 U.S.C. 112 (pre-AIA), second paragraph:

> The specification shall conclude with one or more claims particularly pointing out and distinctly claiming the subject matter which the applicant regards as his invention.

Claims 6, 7 and 14 are rejected under 35 U.S.C. 112(b) or 35 U.S.C. 112 (pre-AIA), second paragraph, as being indefinite for failing to particularly point out and distinctly claim the subject matter which the inventor or a joint inventor (or for applications subject to pre-AIA 35 U.S.C. 112, the applicant), regards as the invention.

Claim 6 recites the limitation "the first direction" in line 3. There is insufficient antecedent basis for this limitation in the claim. It is unclear whether Claim 6 should be amended to depend from Claim 5, which provides support for “a first direction” in Claim 5, lines 3-4.

Claim 7 recites the limitation "the accelerator pedal" in line 2. There is insufficient antecedent basis for this limitation in the claim. It is unclear whether this limitation should be changed to - -an accelerator pedal- -.

Claim 7 recites the limitation "the first direction" in lines 2-3. There is insufficient antecedent basis for this limitation in the claim. It is unclear whether Claim 7 should be amended to depend from Claim 5, which provides support for “a first direction” in Claim 5, line 3.

Claim 14 recites the limitation "the accelerator pedal" in line 2. There is insufficient antecedent basis for this limitation in the claim. It is unclear whether this limitation should be changed to - -an accelerator pedal- -.

Claim 14 recites the limitation "the first direction" in lines 2-3. There is insufficient antecedent basis for this limitation in the claim. It is unclear whether Claim 14 should be amended to depend from Claim 12, which provides support for “a first direction” in Claim 12, line 3.

Double Patenting

The nonstatutory double patenting rejection is based on a judicially created doctrine grounded in public policy (a policy reflected in the statute) so as to prevent the unjustified or improper timewise extension of the “right to exclude” granted by a patent and to prevent possible harassment by multiple

assignees. A nonstatutory double patenting rejection is appropriate where the conflicting claims are not identical, but at least one examined application claim is not patentably distinct from the reference claim(s) because the examined application claim is either anticipated by, or would have been obvious over, the reference claim(s). See, e.g., *In re Berg*, 140 F.3d 1428, 46 USPQ2d 1226 (Fed. Cir. 1998); *In re Goodman*, 11 F.3d 1046, 29 USPQ2d 2010 (Fed. Cir. 1993); *In re Longi*, 759 F.2d 887, 225 USPQ 645 (Fed. Cir. 1985); *In re Van Ornum*, 686 F.2d 937, 214 USPQ 761 (CCPA 1982); *In re Vogel*, 422 F.2d 438, 164 USPQ 619 (CCPA 1970); *In re Thorington*, 418 F.2d 528, 163 USPQ 644 (CCPA 1969).

A timely filed terminal disclaimer in compliance with 37 CFR 1.321(c) or 1.321(d) may be used to overcome an actual or provisional rejection based on nonstatutory double patenting provided the reference application or patent either is shown to be commonly owned with the examined application, or claims an invention made as a result of activities undertaken within the scope of a joint research agreement. See MPEP § 717.02 for applications subject to examination under the first inventor to file provisions of the AIA as explained in MPEP § 2159. See MPEP § 2146 *et seq.* for applications not subject to examination under the first inventor to file provisions of the AIA. A terminal disclaimer must be signed in compliance with 37 CFR 1.321(b).

The filing of a terminal disclaimer by itself is not a complete reply to a nonstatutory double patenting (NSDP) rejection. A complete reply requires that the terminal disclaimer be accompanied by a reply requesting reconsideration of the prior Office action. Even where the NSDP rejection is provisional the reply must be complete. See MPEP § 804, subsection I.B.1. For a reply to a non-final Office action, see 37 CFR 1.111(a). For a reply to final Office action, see 37 CFR 1.113(c). A request for reconsideration while not provided for in 37 CFR 1.113(c) may be filed after final for consideration. See MPEP §§ 706.07(e) and 714.13.

The USPTO Internet website contains terminal disclaimer forms which may be used. Please visit www.uspto.gov/patent/patents-forms. The actual filing date of the application in which the form is filed

determines what form (e.g., PTO/SB/25, PTO/SB/26, PTO/AIA/25, or PTO/AIA/26) should be used. A web-based eTerminal Disclaimer may be filled out completely online using web-screens. An eTerminal Disclaimer that meets all requirements is auto-processed and approved immediately upon submission. For more information about eTerminal Disclaimers, refer to www.uspto.gov/patents/apply/applying-online/eterminal-disclaimer.

Claim 1 and 8 are rejected on the ground of nonstatutory double patenting as being unpatentable over Claim 11 of U.S. Patent No. 11,932,230. Although the claims at issue are not identical, they are not patentably distinct from each other because each of the limitations of Claims 1 and 8 of the instant application are fully contained by Claim 11 of US 11,932,230.

Claims 1-4 and 8-11 are provisionally rejected on the ground of nonstatutory double patenting as being unpatentable over Claim 10 of copending Application No. 18/928,128 (reference application). Although the claims at issue are not identical, they are not patentably distinct from each other because each of the limitations of Claims 1-4 and 8-11 of the instant application are fully contained by Claim 10 of Application No. 18/928,128.

This is a provisional nonstatutory double patenting rejection because the patentably indistinct claims have not in fact been patented.

Claims 1-4 and 8-11 are provisionally rejected on the ground of nonstatutory double patenting as being unpatentable over Claim 10 of copending Application No. 18/928,130 (reference application). Although the claims at issue are not identical, they are not patentably distinct from each other because each of the limitations of Claims 1-4 and 8-11 of the instant application are fully contained by Claim 10 of Application No. 18/928,130.

This is a provisional nonstatutory double patenting rejection because the patentably indistinct claims have not in fact been patented.

Claims 1-4 and 8-11 are provisionally rejected on the ground of nonstatutory double patenting as being unpatentable over Claim 12 of copending Application No. 18/928,131 (reference application). Although the claims at issue are not identical, they are not patentably distinct from each other because each of the limitations of Claims 1-4 and 8-11 of the instant application are fully contained by Claim 12 of Application No. 18/928,131.

This is a provisional nonstatutory double patenting rejection because the patentably indistinct claims have not in fact been patented.

Claims 1-4 and 8-11 are provisionally rejected on the ground of nonstatutory double patenting as being unpatentable over Claim 11 of copending Application No. 18/928,134 (reference application). Although the claims at issue are not identical, they are not patentably distinct from each other because each of the limitations of Claims 1-4 and 8-11 of the instant application are fully contained by Claim 11 of Application No. 18/928,134.

This is a provisional nonstatutory double patenting rejection because the patentably indistinct claims have not in fact been patented.

Claims 1-4 and 8-11 are provisionally rejected on the ground of nonstatutory double patenting as being unpatentable over Claim 10 of copending Application No. 18/928,137 (reference application). Although the claims at issue are not identical, they are not patentably distinct from each other because each of the limitations of Claims 1-4 and 8-11 of the instant application are fully contained by Claim 10 of Application No. 18/928,137.

This is a provisional nonstatutory double patenting rejection because the patentably indistinct claims have not in fact been patented.

Claim Rejections - 35 USC § 102

In the event the determination of the status of the application as subject to AIA 35 U.S.C. 102 and 103 (or as subject to pre-AIA 35 U.S.C. 102 and 103) is incorrect, any correction of the statutory basis (i.e., changing from AIA to pre-AIA) for the rejection will not be considered a new ground of rejection if the prior art relied upon, and the rationale supporting the rejection, would be the same under either status.

The following is a quotation of the appropriate paragraphs of 35 U.S.C. 102 that form the basis for the rejections under this section made in this Office action:

> A person shall be entitled to a patent unless –
>
> (a)(2) the claimed invention was described in a patent issued under section 151, or in an application for patent published or deemed published under section 122(b), in which the patent or application, as the case may be, names another inventor and was effectively filed before the effective filing date of the claimed invention.

Claim(s) 1-14 is/are rejected under 35 U.S.C. 102(a)(2) as being anticipated by SHIVAPRASAD et al. (US 2024/0051558 A1).

Regarding Claim 1, SHIVAPRASAD et al. discloses a motor vehicle (see Figs. 1B and 3) comprising: a frame (Fig. 1B) having wheels (paragraph [0069], “parameters such as wheel spin”); a motor connected to the frame (paragraph [0016], “the motor”); a steering control connected to the wheels to establish a steering angle (paragraph [0099], “steering angle”); a brake control connected to the wheels (paragraphs [0094], “occupant can transition into this vehicle operating mode by selecting brake”; [0112]-[0113], “driver may determine when to press brake, to then cause the vehicle to select a subsequent vehicle operating mode”); a drive system operably connected to the steering control, to the

motor, and to the brake control (paragraph [0122], “user’s computer”); the drive system operable to selectably drive the wheels in a forward direction in a drive mode and in a rearward direction in a reverse mode (paragraphs [0015], “automatically selecting a vehicle driving direction such as forward or reverse”); and the drive system operable in response to a sequence of detected steering and brake inputs when in a first one of the drive mode and reverse mode to change to the other of the drive mode and reverse mode, without operator indication of a direction (paragraphs [0099], “in reverse…checks…high steering angle recently”, “automatically select a new vehicle operating mode”; [0112]-[0113], “presses brake”, “navigate in a direction corresponding to the first arrow and then in an opposite direction thereafter”, “certain turn angles”, “driver may determine when to press brake, to then cause the vehicle to select a subsequent vehicle operating mode”).

Regarding Claim 2, SHIVAPRASAD et al. discloses the sequence of detected steering and brake inputs includes detecting a steering angle in one direction while driving the vehicle in the first one of the drive mode and reverse mode, and detecting a steering angle in a second direction opposite the first direction while driving the vehicle in the other of the drive mode and reverse mode (paragraphs [0093], “execute a multi-point turn”; [0099], “had a high steering angle recently”; [0109], “multi-point turn”).

Regarding Claim 3, SHIVAPRASAD et al. discloses the sequence of detected steering and brake inputs includes detecting a brake application (paragraphs [0094], “occupant can transition into this vehicle operating mode by selecting brake”; [0112]-[0113], “driver may determine when to press brake, to then cause the vehicle to select a subsequent vehicle operating mode”).

Regarding Claim 4, SHIVAPRASAD et al. discloses the brake application is a brake tap (paragraphs [0094], “occupant can transition into this vehicle operating mode by selecting brake”; [0112]-[0113],

"driver may determine when to press brake, to then cause the vehicle to select a subsequent vehicle operating mode").

Regarding Claim 5, SHIVAPRASAD et al. discloses the sequence of detected steering and brake inputs includes: detecting driving in a first direction with the steering control turned in a first direction, detecting application of the brake control, and detecting turning the steering control in a direction opposite the first direction (paragraphs [0093], "execute a multi-point turn"; [0099], "had a high steering angle recently"; [0109], "multi-point turn"; [0113], "certain turn angles and driving directions", "determine when to press brake").

Regarding Claim 6 as best understood, SHIVAPRASAD et al. discloses the sequence of detected steering and brake inputs includes while the vehicle is in a stopped condition, detecting turning the steering control in a direction opposite the first direction (paragraph [0025], "vehicle is stopped"; paragraphs [0093], "execute a multi-point turn"; [0099], "previously parked", "had a high steering angle recently"; [0109], "multi-point turn"; [0113], "certain turn angles and driving directions", "determine when to press brake").

Regarding Claim 7 as best understood, SHIVAPRASAD et al. discloses the sequence of detected steering and brake inputs includes detecting releasing the accelerator pedal when driving in the first direction to slow the vehicle to a stop without driver application of force to the brake control, and then applying force to the brake control (paragraphs [0094], "occupant can transition into this vehicle operating mode by selecting brake and then pushing on the accelerator"; [0112]-[0113], "driver may determine when to press brake, to then cause the vehicle to select a subsequent vehicle operating mode").

Regarding Claim 8, SHIVAPRASAD et al. discloses a motor vehicle (see Figs. 1B and 3) comprising: a frame (Fig. 1B) having wheels (paragraph [0069], “parameters such as wheel spin”); a motor connected to the frame (paragraph [0016], “the motor”); a steering control connected to the wheels to establish a steering angle (paragraph [0099], “steering angle”); a brake control connected to the wheels (paragraphs [0094], “occupant can transition into this vehicle operating mode by selecting brake”; [0112]-[0113], “driver may determine when to press brake, to then cause the vehicle to select a subsequent vehicle operating mode”); a controller operably connected to the steering control, to the motor, and to the brake control (paragraph [0122], “user’s computer”); the controller operable to selectably drive the wheels in a forward direction in a drive mode and in a rearward direction in a reverse mode (paragraphs [0015], “automatically selecting a vehicle driving direction such as forward or reverse”); and the controller operable in response to a sequence of detected steering and brake inputs when in a first one of the drive mode and reverse mode to change to the other of the drive mode and reverse mode, without operator indication of a direction (paragraphs [0099], “in reverse…checks…high steering angle recently”, “automatically select a new vehicle operating mode”; [0112]-[0113], “presses brake”, “navigate in a direction corresponding to the first arrow and then in an opposite direction thereafter”, “certain turn angles”, “driver may determine when to press brake, to then cause the vehicle to select a subsequent vehicle operating mode”).

Regarding Claim 9, SHIVAPRASAD et al. discloses the sequence of detected steering and brake inputs includes detecting a steering angle in one direction while driving the vehicle in the first one of the drive mode and reverse mode, and detecting a steering angle in a second direction opposite the first direction while driving the vehicle in the other of the drive mode and reverse mode (paragraphs [0093], “execute a multi-point turn”; [0099], “had a high steering angle recently”; [0109], “multi-point turn”).

Regarding Claim 10, SHIVAPRASAD et al. discloses the sequence of detected steering and brake inputs includes detecting a brake application (paragraphs [0094], “occupant can transition into this vehicle operating mode by selecting brake”; [0112]-[0113], “driver may determine when to press brake, to then cause the vehicle to select a subsequent vehicle operating mode”).

Regarding Claim 11, SHIVAPRASAD et al. discloses the brake application is a brake tap (paragraphs [0094], “occupant can transition into this vehicle operating mode by selecting brake”; [0112]-[0113], “driver may determine when to press brake, to then cause the vehicle to select a subsequent vehicle operating mode”).

Regarding Claim 12, SHIVAPRASAD et al. discloses the sequence of detected steering and brake inputs includes: detecting driving in a first direction with the steering control turned in a first direction, detecting application of the brake control, and detecting turning the steering control in a direction opposite the first direction (paragraphs [0093], “execute a multi-point turn”; [0099], “had a high steering angle recently”; [0109], “multi-point turn”; [0113], “certain turn angles and driving directions”, “determine when to press brake”).

Regarding Claim 13, SHIVAPRASAD et al. discloses the sequence of detected steering and brake inputs includes while the vehicle is in a stopped condition, detecting turning the steering control in a direction opposite the first direction (paragraph [0025], “vehicle is stopped”; paragraphs [0093], “execute a multi-point turn”; [0099], “previously parked”, “had a high steering angle recently”; [0109], “multi-point turn”; [0113], “certain turn angles and driving directions”, “determine when to press brake”).

Regarding Claim 14 as best understood, SHIVAPRASAD et al. discloses the sequence of detected steering and brake inputs includes detecting releasing the accelerator pedal when driving in the first direction to slow the vehicle to a stop without driver application of force to the brake control, and then applying force to the brake control (paragraphs [0094], “occupant can transition into this vehicle operating mode by selecting brake and then pushing on the accelerator”; [0112]-[0113], “driver may determine when to press brake, to then cause the vehicle to select a subsequent vehicle operating mode”).

Conclusion

The prior art made of record and not relied upon is considered pertinent to applicant's disclosure.

HARA et al. (US 2021/0300349 A1) discloses a vehicle movement assist system (see ABSTRACT).

SAKURAI (US 2020/0404192 A1) discloses a vehicle imaging control system (see ABSTRACT).

TOMOZAWA et al. (US 2016/0075329 A1) discloses a parking assist system (see ABSTRACT).

KARANDIKAR (US 2013/0184979 A1) discloses a motor vehicle movement control system (see ABSTRACT).

WUTTKE et al. (US 2013/0110342 A1) discloses a vehicle parking control system (see ABSTRACT).

JANECKE (US 5,436,833) disclose a transmission control system (see ABSTRACT).

Any inquiry concerning this communication or earlier communications from the examiner should be directed to EDWIN YOUNG whose telephone number is (571)272-4781. The examiner can normally be reached Monday - Friday 10:00 am - 6:00 pm (CST).

Examiner interviews are available via telephone, in-person, and video conferencing using a USPTO supplied web-based collaboration tool. To schedule an interview, applicant is encouraged to use the USPTO Automated Interview Request (AIR) at http://www.uspto.gov/interviewpractice.

If attempts to reach the examiner by telephone are unsuccessful, the examiner's supervisor, Jacob S Scott can be reached on (571)270-3415. The fax phone number for the organization where this application or proceeding is assigned is 571-273-8300.

Information regarding the status of published or unpublished applications may be obtained from Patent Center. Unpublished application information in Patent Center is available to registered users. To file and manage patent submissions in Patent Center, visit: https://patentcenter.uspto.gov. Visit https://www.uspto.gov/patents/apply/patent-center for more information about Patent Center and https://www.uspto.gov/patents/docx for information about filing in DOCX format. For additional questions, contact the Electronic Business Center (EBC) at 866-217-9197 (toll-free). If you would like assistance from a USPTO Customer Service Representative, call 800-786-9199 (IN USA OR CANADA) or 571-272-1000.

EDWIN YOUNG
Primary Examiner
Art Unit 3659

/Edwin A Young/
Primary Examiner, Art Unit 3655

UNITED STATES
PATENT AND TRADEMARK OFFICE

P.O. Box 1450
Alexandria, VA 22313 - 1450
www.uspto.gov

ELECTRONIC PAYMENT RECEIPT

APPLICATION #	RECEIPT DATE / TIME	ATTORNEY DOCKET #
18/928,135	**12/13/2024 09:36:11 AM Z ET**	**BKL-11C5**

Title of Invention

VEHICLE GEAR SELECTION CONTROL

Application Information

APPLICATION TYPE	Utility - Nonprovisional Application under 35 USC 111(a)	PATENT #	-
CONFIRMATION #	1124	FILED BY	ILYA CHERNYAVSKIY
PATENT CENTER #	68357383	AUTHORIZED BY	-
CUSTOMER #	25917	FILING DATE	10/27/2024
CORRESPONDENCE ADDRESS	-	FIRST NAMED INVENTOR	Bennet Langlotz

Payment Information

PAYMENT METHOD	PAYMENT TRANSACTION ID	PAYMENT AUTHORIZED BY
CARD / 9002	**E2024BC036236402**	**ILYA CHERNYAVSKIY**

FEE CODE	DESCRIPTION	ITEM PRICE($)	QUANTITY	ITEM TOTAL($)
2814	STATUTORY DISCLAIMER, INCLUDING TERMINAL DISCLAIMER	170.00	1	170.00
			TOTAL AMOUNT:	**$170.00**

This Acknowledgement Receipt evidences receipt on the noted date by the USPTO of the indicated documents, characterized by the applicant, and including page counts, where applicable. It serves as evidence of receipt similar to a Post Card, as described in MPEP 503.

New Applications Under 35 U.S.C. 111

If a new application is being filed and the application includes the necessary components for filing date (see 37 CFR 1.53(b)-(d) and MPEP 506), a Filing Receipt (37 CFR 1.54) will be issued in due course and the date shown on this Acknowledgement Receipt will establish the filing date of the application

National Stage of an International Application under 35 U.S.C. 371

If a timely submission to enter the national stage of an international application is compliant with the conditions of 35 U.S.C.

371 and other applicable requirements a Form PCT/DO/EO/903 indicating acceptance of the application as a national stage submission under 35 U.S.C. 371 will be issued in addition to the Filing Receipt, in due course.

New International Application Filed with the USPTO as a Receiving Office

If a new international application is being filed and the international application includes the necessary components for an international filing date (see PCT Article 11 and MPEP 1810), a Notification of the International Application Number and of the International Filing Date (Form PCT/RO/105) will be issued in due course, subject to prescriptions concerning national security, and the date shown on this Acknowledgement Receipt will establish the international filing date of the application.

UNITED STATES
PATENT AND TRADEMARK OFFICE

Commissioner for Patents
United States Patent and Trademark Office
P.O. Box 1450
Alexandria, VA 22313 - 1450
www.uspto.gov

APPROVAL LETTER

APPLICATION #	FILING DATE	APPLICANT/PATENT UNDER REEXAMINATION
18/928,135	**10/27/2024**	**Bennet Langlotz**

Title of Invention

VEHICLE GEAR SELECTION CONTROL

Electronic terminal disclaimer filed on 12/13/2024

Approved

This patent is subject to a Terminal Disclaimer

Approved / Disapproved by: Electronic Terminal Disclaimer automatically approved

UNITED STATES
PATENT AND TRADEMARK OFFICE

P.O. Box 1450
Alexandria, VA 22313 - 1450
www.uspto.gov

TERMINAL DISCLAIMER TO OBVIATE A DOUBLE PATENTING REJECTION OVER A PRIOR PATENT

APPLICATION #	FILING DATE	FIRST NAMED INVENTOR	ATTORNEY DOCKET #
18928135	**10/27/2024**	**Bennet Langlotz**	**BKL-11C5**

Title of Invention

VEHICLE GEAR SELECTION CONTROL

- ✔ Filing of terminal disclaimer does not obviate requirement for response under 37 CFR 1.111 to outstanding Office Action
- ✔ This electronic Terminal Disclaimer is not being used for a Joint Research Agreement.

Owner	Percent interest
Bulletproof Property Management, LLC	100%
Total	**100%**

The owner(s) of percent interest listed above in the instant application hereby disclaims, except as provided below, the terminal part of the statutory term of any patent granted on the instant application which would extend beyond the expiration date of the full statutory term of any patent granted on pending reference Application Number(s)

Application #	Filing Date
18928128	10/27/2024

18928130	10/27/2024
18928131	10/27/2024
18928134	10/27/2024
18928137	10/27/2024

as the term of any patent granted on said reference application may be shortened by any terminal disclaimer filed prior to the grant of any patent on the pending reference application. The owner hereby agrees that any patent so granted on the instant application shall be enforceable only for and during such period that it and any patent granted on the reference application are commonly owned. This agreement runs with any patent granted on the instant application and is binding upon the grantee, its successors or assigns.
In making the above disclaimer, the owner does not disclaim the terminal part of any patent granted on the instant application that would extend to the expiration date of the full statutory term of any patent granted on said reference application, "as the term of any patent granted on said reference application may be shortened by any terminal disclaimer filed prior to the grant of any patent on the pending reference application," in the event that any such patent granted on the pending reference application: expires for failure to pay a maintenance fee, is held unenforceable, is found invalid by a court of competent jurisdiction, is statutorily disclaimed in whole or terminally disclaimed under 37 CFR 1.321, has all claims canceled by a reexamination certificate, is reissued, or is in any manner terminated prior to the expiration of its full statutory term as shortened by any terminal disclaimer filed prior to its grant.

The owner(s) of percent interest listed above in the instant application hereby disclaims, except as provided below, the terminal part of the statutory term of any patent granted on the instant application which would extend beyond the expiration date of the full statutory term of prior patent number(s)

Patent #
11932230

as the term of said prior patent is presently shortened by any terminal disclaimer. The owner hereby agrees that any patent so granted on the instant application shall be enforceable only for and during such period that it and the prior patent are commonly owned. This agreement runs with any patent granted on the instant application and is binding upon the grantee, its successors or assigns.
In making the above disclaimer, the owner does not disclaim the terminal part of the term of any patent granted on the instant application that would extend to the expiration date of the full statutory term of the prior patent, "as the term of said prior patent is presently shortened by any terminal disclaimer," in the event that said prior patent later:
• expires for failure to pay a maintenance fee;
• is held unenforceable;
• is found invalid by a court of competent jurisdiction;

- is statutorily disclaimed in whole or terminally disclaimed under 37 CFR 1.321;
- has all claims canceled by a reexamination certificate;
- is reissued; or
- is in any manner terminated prior to the expiration of its full statutory term as presently shortened by any terminal disclaimer.

Terminal disclaimer fee under 37 CFR 1.20(d) included with Electronic Terminal Disclaimer request.

Applicant claims the following entity status:
Small

I hereby declare that all statements made herein of my own knowledge are true and that all statemnts made on information and belief are believed to be true; and further that these statements were made with the knowledge that willful false statements and the like so made are punishable by fine or imprisonment, or both, under Section 1001 of Title 18 of the United States Code and that such willful false statements may jeopardize the validity of the application or any patent issued thereon.

I certify, in accordance with 37 CFR 1.4(d)(4) that I am: An attorney or agent registered to practice before the Patent and Trademark Office who is of record in this application

Signature	Name	Registration #
/Ilya Chernyavskiy/	ILYA CHERNYAVSKIY	80785

---

* Statement under 37 CFR 3.73(b) is required if terminal disclaimer is signed by the assignee (owner). Form PTO/SB/96 may be used for making this certification. See MPEP 324.

UNITED STATES
PATENT AND TRADEMARK OFFICE

P.O. Box 1450
Alexandria, VA 22313 - 1450
www.uspto.gov

ELECTRONIC ACKNOWLEDGEMENT RECEIPT

APPLICATION #	RECEIPT DATE / TIME	ATTORNEY DOCKET #
18/928,135	**12/13/2024 09:36:11 AM Z ET**	**BKL-11C5**

Title of Invention

VEHICLE GEAR SELECTION CONTROL

Application Information

APPLICATION TYPE	Utility - Nonprovisional Application under 35 USC 111(a)	PATENT #	-
CONFIRMATION #	1124	FILED BY	ILYA CHERNYAVSKIY
PATENT CENTER #	68357383	FILING DATE	10/27/2024
CUSTOMER #	25917	FIRST NAMED INVENTOR	Bennet Langlotz
CORRESPONDENCE ADDRESS	-	AUTHORIZED BY	-

Documents

TOTAL DOCUMENTS: 2

DOCUMENT	PAGES	DESCRIPTION	SIZE (KB)
petition-request.pdf	3	Terminal Disclaimer-Filed (Electronic)	48 KB
grantLetter.pdf	1	Terminal Disclaimer-Electronic-Approved	18 KB

Digest

DOCUMENT	MESSAGE DIGEST(SHA-512)
petition-request.pdf	DAC0A7E93A5A27FC4C22CE225C0B52DAA60C1D5EEACBD231C9905716166F2C1D9133143CB908591F6DAA2AE5E0939B12517473709675657C40B08F357C4C8D0B
grantLetter.pdf	F86A3671F892818BE9E8C5EC56CAF3FBB3CFA579C1ABB972

4D47C4184427D1EE5E456FB280C283BD92631165A7480E2B5
9BBEBA62D6F912D325D00F135839AFD

This Acknowledgement Receipt evidences receipt on the noted date by the USPTO of the indicated documents, characterized by the applicant, and including page counts, where applicable. It serves as evidence of receipt similar to a Post Card, as described in MPEP 503.

New Applications Under 35 U.S.C. 111

If a new application is being filed and the application includes the necessary components for filing date (see 37 CFR 1.53(b)-(d) and MPEP 506), a Filing Receipt (37 CFR 1.54) will be issued in due course and the date shown on this Acknowledgement Receipt will establish the filing date of the application

National Stage of an International Application under 35 U.S.C. 371

If a timely submission to enter the national stage of an international application is compliant with the conditions of 35 U.S.C. 371 and other applicable requirements a Form PCT/DO/EO/903 indicating acceptance of the application as a national stage submission under 35 U.S.C. 371 will be issued in addition to the Filing Receipt, in due course.

New International Application Filed with the USPTO as a Receiving Office

If a new international application is being filed and the international application includes the necessary components for an international filing date (see PCT Article 11 and MPEP 1810), a Notification of the International Application Number and of the International Filing Date (Form PCT/RO/105) will be issued in due course, subject to prescriptions concerning national security, and the date shown on this Acknowledgement Receipt will establish the international filing date of the application.

PTO/SB/06 (09-11)
Approved for use through 1/31/2014. OMB 0651-0032
U.S. Patent and Trademark Office; U.S. DEPARTMENT OF COMMERCE
Under the Paperwork Reduction Act of 1995, no persons are required to respond to a collection of information unless it displays a valid OMB control number.

PATENT APPLICATION FEE DETERMINATION RECORD Substitute for Form PTO-875	Application or Docket Number 18/928,135	Filing Date 10/27/2024	☐ To be Mailed

ENTITY: ☐ LARGE ☑ SMALL ☐ MICRO

APPLICATION AS FILED - PART I

FOR	(Column 1) NUMBER FILED	(Column 2) NUMBER EXTRA		RATE ($)	FEE ($)
☐ BASIC FEE (37 CFR 1.16(a), (b), or (c))	N/A	N/A		N/A	
☐ SEARCH FEE (37 CFR 1.16(k), (i), or (m))	N/A	N/A		N/A	
☐ EXAMINATION FEE (37 CFR 1.16(o), (p), or (q))	N/A	N/A		N/A	
TOTAL CLAIMS (37 CFR 1.16(i))	minus 20 =	*		x $40 =	
INDEPENDENT CLAIMS (37 CFR 1.16(h))	minus 3 =	*		x $192 =	
☐ APPLICATION SIZE FEE (37 CFR 1.16(s))	If the specification and drawings exceed 100 sheets of paper, the application size fee due is $310 ($155 for small entity) for each additional 50 sheets or fraction thereof. See 35 U.S.C. 41(a)(1)(G) and 37 CFR 1.16(s).				
☐ MULTIPLE DEPENDENT CLAIM PRESENT (37 CFR 1.16(j))					
* If the difference in column 1 is less than zero, enter "0" in column 2.				TOTAL	

APPLICATION AS AMENDED - PART II

AMENDMENT		(Column 1)		(Column 2)	(Column 3)			
	12/15/2024	CLAIMS REMAINING AFTER AMENDMENT		HIGHEST NUMBER PREVIOUSLY PAID FOR	PRESENT EXTRA		RATE ($)	ADDITIONAL FEE ($)
	Total (37 CFR 1.16(i))	* 14	Minus	** 20	= 0		x $40 =	0
	Independent (37 CFR 1.16(h))	* 2	Minus	*** 3	= 0		x $192 =	0
	☐ Application Size Fee (37 CFR 1.16(s))							
	☐ FIRST PRESENTATION OF MULTIPLE DEPENDENT CLAIM (37 CFR 1.16(j))							
							TOTAL ADD'L FEE	0

AMENDMENT		(Column 1)		(Column 2)	(Column 3)			
		CLAIMS REMAINING AFTER AMENDMENT		HIGHEST NUMBER PREVIOUSLY PAID FOR	PRESENT EXTRA		RATE ($)	ADDITIONAL FEE ($)
	Total (37 CFR 1.16(i))	*	Minus	**	=		x $0 =	
	Independent (37 CFR 1.16(h))	*	Minus	***	=		x $0 =	
	☐ Application Size Fee (37 CFR 1.16(s))							
	☐ FIRST PRESENTATION OF MULTIPLE DEPENDENT CLAIM (37 CFR 1.16(j))							
							TOTAL ADD'L FEE	

* If the entry in column 1 is less than the entry in column 2, write "0" in column 3.	LIE
** If the "Highest Number Previously Paid For" IN THIS SPACE is less than 20, enter "20".	/TRACEY M YOUNG/
*** If the "Highest Number Previously Paid For" IN THIS SPACE is less than 3, enter "3".	
The "Highest Number Previously Paid For" (Total or Independent) is the highest number found in the appropriate box in column 1.	

This collection of information is required by 37 CFR 1.16. The information is required to obtain or retain a benefit by the public which is to file (and by the USPTO to process) an application. Confidentiality is governed by 35 U.S.C. 122 and 37 CFR 1.14. This collection is estimated to take 12 minutes to complete, including gathering, preparing, and submitting the completed application form to the USPTO. Time will vary depending upon the individual case. Any comments on the amount of time you require to complete this form and/or suggestions for reducing this burden, should be sent to the Chief Information Officer, U.S. Patent and Trademark Office, U.S. Department of Commerce, P.O. Box 1450, Alexandria, VA 22313-1450. DO NOT SEND FEES OR COMPLETED FORMS TO THIS ADDRESS. **SEND TO: Commissioner for Patents, P.O. Box 1450, Alexandria, VA 22313-1450.**

If you need assistance in completing the form, call 1-800-PTO-9199 and select option 2.

IN THE UNITED STATES PATENT AND TRADEMARK OFFICE

In re application of
Inventor(s): Bennet Langlotz
Serial No. 18/928,135
Filed: October 27, 2024
For: VEHICLE GEAR SELECTION CONTROL
Examiner: Young, Edwin
Date: December 15, 2024
Art Unit: 3655

Response to Office Action

Commissioner for Patents
PO Box 1450
Alexandria, VA 22313-1450

Sir:

In response to the Office Action of December 9, 2024, please consider the following. At any time during the pendency of this application, please charge fee deficiencies and credit overpayments to Deposit Account 500493.

In the Claims:

1. (original) A motor vehicle comprising:
   a frame having wheels;
   a motor connected to the frame;
   a steering control connected to the wheels to establish a steering angle;
   a brake control connected to the wheels;
   a drive system operably connected to the steering control, to the motor, and to the brake control;
   the drive system operable to selectably drive the wheels in a forward direction in a drive mode and in a rearward direction in a reverse mode; and
   the drive system operable in response to a sequence of detected steering and brake inputs when in a first one of the drive mode and reverse mode to change to the other of the drive mode and reverse mode, without operator indication of a direction.

2. (original) The motor vehicle of claim 1 wherein the sequence of detected steering and brake inputs includes detecting a steering angle in one direction while driving the vehicle in the first one of the drive mode and reverse mode, and detecting a steering angle in a second direction opposite the first direction while driving the vehicle in the other of the drive mode and reverse mode.

3. (original) The motor vehicle of claim 2 wherein the sequence of detected steering and brake inputs includes detecting a brake application.

4. (original) The motor vehicle of claim 3 wherein the brake application is a brake tap.

5. (original) The motor vehicle of claim 1 wherein the sequence of detected steering and brake inputs includes:
   detecting driving in a first direction with the steering control turned in a first direction,
   detecting application of the brake control, and
   detecting turning the steering control in a direction opposite the first direction.

6. (currently amended) The motor vehicle of claim ~~4~~ 5 wherein the sequence of detected steering and brake inputs includes while the vehicle is in a stopped condition, detecting turning the steering control in a direction opposite the first direction.

7. (currently amended) The motor vehicle of claim ~~4~~ 5 wherein the sequence of detected steering and brake inputs includes detecting releasing ~~the~~ an accelerator pedal when driving in the first direction to slow the vehicle to a stop without driver application of force to the brake control, and then applying force to the brake control.

8. (original) A motor vehicle comprising:
a frame having wheels;
a motor connected to the frame;
a steering control connected to the wheels to establish a steering angle;
a brake control connected to the wheels;
a controller operably connected to the steering control, to the motor, and to the brake control;
the controller operable to selectably drive the wheels in a forward direction in a drive mode and in a rearward direction in a reverse mode; and
the controller operable in response to a sequence of detected steering and brake inputs when in a first one of the drive mode and reverse mode to change to the other of the drive mode and reverse mode, without operator indication of a direction.

9. (original) The motor vehicle of claim 8 wherein the sequence of detected steering and brake inputs includes detecting a steering angle in one direction while driving the vehicle in the first one of the drive mode and reverse mode, and detecting a steering angle in a second direction opposite the first direction while driving the vehicle in the other of the drive mode and reverse mode.

10. (original) The motor vehicle of claim 9 wherein the sequence of detected steering and brake inputs includes detecting a brake application.

11. (original) The motor vehicle of claim 10 wherein the brake application is a brake tap.

12. (original) The motor vehicle of claim 8 wherein the sequence of detected steering and brake inputs includes:
detecting driving in a first direction with the steering control turned in a first direction,
detecting application of the brake control, and
detecting turning the steering control in a direction opposite the first direction.

13. (original) The motor vehicle of claim 12 wherein the sequence of detected steering and brake inputs includes while the vehicle is in a stopped condition, detecting turning the steering control in a direction opposite the first direction.

14. (currently amended) The motor vehicle of claim ~~8~~ 12 wherein the sequence of detected steering and brake inputs includes detecting releasing ~~the~~ an accelerator pedal when driving in the first direction to slow the vehicle to a stop without driver application of force to the brake control, and then applying force to the brake control.

REMARKS

Claims 1-14 remain in the application.

Claims 1-14 were rejected under 35 U.S.C. 102(a)(2) as being anticipated by US Patent Publication No. 2024/0051558 to Shivaprasad.

Applicant notes with appreciation a December 5, 2024 telephone conversation with the examiner in which the priority dates and content of the cited publication 20240051558 to Shivaprasad et al. were discussed. It was agreed that the filing date of the publication was subsequent to applicant's filing date, and that only the subject matter of the U.S. Provisional Patent Application (No. 63/371,370 titled "DYNAMICALLY DETERMINING VEHICLE MOTION" and filed on Aug. 12, 2022) is pertinent to patentability.

Applicant submits that the provisional application does not support the section 102 rejections because it lacks substantial content that was only added in the filing of the non-provisional application that is the cited publication. The provisional contains about 5304 words, and the publication contains about 16297 words. Most of the cited publication is therefore not prior art subject matter pertinent to patentability of applicant's application. More importantly, the key passages cited to support the section 102 rejection are absent in the provisional application.

A computerized document comparison of the two documents reveals the many of the paragraphs of the publication that are absent in the provisional. These are believed to include the following paragraphs of the specification that are entirely or substantially new, disclosed for the first time in the non-provisional: 15-16, 18-26, 29, 36-55, 60-70, 72, 77-80, 84, 94, 96-99, and 108-135. Applicant notes that there are other changes, and several of these substantially new paragraphs include original provisional content, so that a direct reading of the provisional is needed to assess its pertinence to patentability and suitability for citation in support of a rejection.

Applicant notes that published non-provisional application has the following figures that were not in the provisional application: 1B, 1C, 1D, 5A and 5B, and other of the figures lack certain content.

Applicant notes that the section 102 rejection of claim 1 relies on the publication's figure 1B and figure 3, and paragraphs 15, 16, 69, 94, 99, 112-113, and 122. None of these relied-upon paragraphs are present in the provisional, and only cited Figure 3 is in the provisional, and with some differences. Accordingly, the rejection of claim 1 is without support because effectively all the cited subject matter was filed subsequent to applicant's filing.

The rejections of almost all the dependent claims similarly cites only paragraphs that were entirely absent in the provisional application (adding 25, 94, 109). The only apparent exceptions are that the rejection of claim 6 cited four paragraphs (25, 93, 99, 109 and 113) that were not in the provisional, and one (93) that was, the rejection of claim 9 cited two paragraphs (99, 109) that were not in the provisional, and one (93) that was, the rejection of claim 12 cited three paragraphs (99, 109, 113) that were not in the provisional, and one (93) that was, and the rejection of claim 13 cited three paragraphs (99, 109, 113) that were not in the provisional, and one (93) that was.

In the telephone conference, the examiner noted the following third paragraph of page 11 of the provisional: "*Illustratively, multiple iterations of the decision-making logic can result in various operational parameters. Still further, in some embodiments, the processing result of the decision-making logic can be embodied as a set or series of operational parameters that cause the vehicle to implement an ordered set of actions, an ordered set of parameters, or combinations therefore. For example, the processing result can include a combination of operational parameters that may cause the vehicle to execute a multi-point turn, an ordered acceleration pattern, and the like.*"

Applicant points out that this does not disclose or enable the claimed concept, as three point turns presumably may be automated, enabled by, or based on many different alternative controlling or influencing factors or systems other than that claimed by applicant.

An Electronic Terminal Disclaimer was filed and approved on December 13, 2024.

The application is now believed to be in condition for allowance. Reconsideration of the application is respectfully requested.

The undersigned invites a telephonic interview at the initiation of the examiner at any time to facilitate prosecution of the case.

Respectfully submitted,
LANGLOTZ PATENT & TRADEMARK WORKS, LLC
/bennet langlotz/
Bennet K. Langlotz
Attorney for Applicant
Registration No. 35,928

Langlotz Patent & Trademark Works, LLC
PO Box 660675 #37585
Dallas, TX 75266-0675
Telephone 888 852 4246
Facsimile 888 852 4246
Email: patent@langlotz.com

UNITED STATES
PATENT AND TRADEMARK OFFICE

P.O. Box 1450
Alexandria, VA 22313 - 1450
www.uspto.gov

ELECTRONIC ACKNOWLEDGEMENT RECEIPT

APPLICATION #	RECEIPT DATE / TIME	ATTORNEY DOCKET #
18/928,135	**12/15/2024 10:18:34 AM Z ET**	**BKL-11C5**

Title of Invention

VEHICLE GEAR SELECTION CONTROL

Application Information

APPLICATION TYPE	Utility - Nonprovisional Application under 35 USC 111(a)	PATENT #	-
CONFIRMATION #	1124	FILED BY	Russell Crawford
PATENT CENTER #	68374848	FILING DATE	10/27/2024
CUSTOMER #	25917	FIRST NAMED INVENTOR	Bennet Langlotz
CORRESPONDENCE ADDRESS	-	AUTHORIZED BY	Bennet Langlotz

Documents

TOTAL DOCUMENTS: 3

DOCUMENT		PAGES	DESCRIPTION	SIZE (KB)
BKL-11C5_Signed_Office_Action_Response_amd1.pdf		7	-	147 KB
BKL-11C5_Signed_Office_Action_Response_amd1-A....pdf	(1-1)	1	Amendment/Request for Reconsideration-After Non-Final Rejection	58 KB
BKL-11C5_Signed_Office_Action_Response_amd1-CLM.pdf	(2-4)	3	Claims	98 KB
BKL-11C5_Signed_Office_Action_Response_amd1-REM.pdf	(5-7)	3	Applicant Arguments/Remarks Made in an Amendment	105 KB

Digest

DOCUMENT	MESSAGE DIGEST(SHA-512)
BKL-11C5_Signed_Office_Action_Response_amd1.pdf	66BE0D27E944FBCB64FD526C6FF18B6BAE9932712FA6BC019CCC56A70C6FD49F2C63A86C774A1244BEFC615649D882850FF4E9468EC77E2F5B5F4DD18802F203
BKL-11C5_Signed_Office_Action_Response_amd1-A....pdf	1155E47BFC729DE5246A826397B4CB347FF4F38E1F813CE515E4618D1D196E93A0217D7344276FCFC020FCA0C0293C5120A347ED24D10A3BB1E0DF963EBE3345
BKL-11C5_Signed_Office_Action_Response_amd1-CLM.pdf	09182ADD1C9CAB3AAC937B3B69CEA31B2556F045661902D6C62DC88EDD6585226430543DA43CDA61AC7176B9BCC7D3416D0AD68469502F8ED80A6CEA5DA7489F
BKL-11C5_Signed_Office_Action_Response_amd1-REM.pdf	A1312E5BF75DD00DB983C52843B1136A3D2DFDF26010701D0B46C2A9F86C80C14DF573B9A0ACD4FB20E6EA140932962E37FBD97A2F7911C5E17C5168C965AA7E

This Acknowledgement Receipt evidences receipt on the noted date by the USPTO of the indicated documents, characterized by the applicant, and including page counts, where applicable. It serves as evidence of receipt similar to a Post Card, as described in MPEP 503.

New Applications Under 35 U.S.C. 111

If a new application is being filed and the application includes the necessary components for filing date (see 37 CFR 1.53(b)-(d) and MPEP 506), a Filing Receipt (37 CFR 1.54) will be issued in due course and the date shown on this Acknowledgement Receipt will establish the filing date of the application

National Stage of an International Application under 35 U.S.C. 371

If a timely submission to enter the national stage of an international application is compliant with the conditions of 35 U.S.C. 371 and other applicable requirements a Form PCT/DO/EO/903 indicating acceptance of the application as a national stage submission under 35 U.S.C. 371 will be issued in addition to the Filing Receipt, in due course.

New International Application Filed with the USPTO as a Receiving Office

If a new international application is being filed and the international application includes the necessary components for an international filing date (see PCT Article 11 and MPEP 1810), a Notification of the International Application Number and of the International Filing Date (Form PCT/RO/105) will be issued in due course, subject to prescriptions concerning national security, and the date shown on this Acknowledgement Receipt will establish the international filing date of the application.

Search Notes	Application/Control No.	Applicant(s)/Patent Under Reexamination
	18/928,135	Langlotz, Bennet
	Examiner	**Art Unit**
	EDWIN YOUNG	3655

CPC - Searched*		
Symbol	**Date**	**Examiner**
B60W 10/10, 10/20, 30/18009, 50/082, 50/10, 2540/12	12/4/2024	/EAY/
G08G1/22	12/4/2024	/EAY/
updated above	12/21/2024	/EAY/

CPC Combination Sets - Searched*		
Symbol	**Date**	**Examiner**

US Classification - Searched*			
Class	**Subclass**	**Date**	**Examiner**

* See search history printout included with this form or the SEARCH NOTES box below to determine the scope of the search.

Search Notes		
Search Notes	**Date**	**Examiner**
PE2E search (all databases)	12/4/2024	/EAY/
Updated and expanded search in related application 18/403,221	12/4/2024	/EAY/
All CPC symbols above limited through text search	12/4/2024	/EAY/
Inventor, Assignee and forward/backward citation search	12/4/2024	/EAY/
Google Scholar NPL search	12/4/2024	/EAY/
updated above	12/21/2024	/EAY/
Consulted with SPE Jacob Scott and TQAS Claude Brown on 102(a)(2) priority date determination	12/21/2024	/EAY/

/Edwin A Young/ Primary Examiner, Art Unit 3655	

Search Notes	Application/Control No.	Applicant(s)/Patent Under Reexamination
	18/928,135	Langlotz, Bennet
	Examiner	**Art Unit**
	EDWIN YOUNG	3655

Interference Search			
US Class/CPC Symbol	**US Subclass/CPC Group**	**Date**	**Examiner**
	Claims text search (see search history)	12/4/2024	/EAY/
	updated above	12/21/2024	/EAY/

/Edwin A Young/ Primary Examiner, Art Unit 3655	

Index of Claims	Application/Control No.	Applicant(s)/Patent Under Reexamination
	18/928,135	Langlotz, Bennet
	Examiner	**Art Unit**
	EDWIN YOUNG	3655

✓	Rejected	-	Cancelled	N	Non-Elected	A	Appeal
=	Allowed	÷	Restricted	I	Interference	O	Objected

CLAIMS

☑ Claims renumbered in the same order as presented by applicant ☐ CPA ☑ T.D. ☐ R.1.47

CLAIM		DATE								
Final	Original	12/04/2024	12/21/2024							
	1	✓	=							
	2	✓	=							
	3	✓	=							
	4	✓	=							
	5	✓	=							
	6	✓	=							
	7	✓	=							
	8	✓	=							
	9	✓	=							
	10	✓	=							
	11	✓	=							
	12	✓	=							
	13	✓	=							
	14	✓	=							

Issue Classification	Application/Control No.	Applicant(s)/Patent Under Reexamination
	18/928,135	Langlotz, Bennet
	Examiner	**Art Unit**
	EDWIN YOUNG	3655

CPC						
Symbol					**Type**	**Version**
B60W	/	30	/	18009	F	2013-01-01
G08G	/	1	/	22	I	2013-01-01
B60W	/	10	/	20	I	2013-01-01
B60W	/	10	/	10	I	2013-01-01
B60W	/	50	/	082	I	2013-01-01
B60W	/	50	/	10	I	2013-01-01
B60W	/	2540	/	12	A	2013-01-01

CPC Combination Sets								
Symbol					**Type**	**Set**	**Ranking**	**Version**
	/		/					

NONE (Assistant Examiner) (Date)		**Total Claims Allowed:** 14	
/Edwin A Young/ Primary Examiner, Art Unit 3655 (Primary Examiner) (Date)	21 December 2024	O.G. Print Claim(s) 1	O.G. Print Figure 2

U.S. Patent and Trademark Office Part of Paper No.: 20241221A

Issue Classification	Application/Control No.	Applicant(s)/Patent Under Reexamination
	18/928,135	Langlotz, Bennet
	Examiner	**Art Unit**
	EDWIN YOUNG	3655

INTERNATIONAL CLASSIFICATION				
CLAIMED				
B60W	/	30	/	18

NON-CLAIMED				
	/		/	

US ORIGINAL CLASSIFICATION	
CLASS	SUBCLASS

CROSS REFERENCES(S)						
CLASS	SUBCLASS (ONE SUBCLASS PER BLOCK)					

NONE (Assistant Examiner)	(Date)	Total Claims Allowed: 14	
/Edwin A Young/ Primary Examiner, Art Unit 3655 (Primary Examiner)	21 December 2024 (Date)	O.G. Print Claim(s) 1	O.G. Print Figure 2

U.S. Patent and Trademark Office

Part of Paper No.: 20241221A

Issue Classification	Application/Control No.	Applicant(s)/Patent Under Reexamination
	18/928,135	Langlotz, Bennet
	Examiner	**Art Unit**
	EDWIN YOUNG	3655

☑ Claims renumbered in the same order as presented by applicant ☐ CPA ☑ T.D. ☐ R.1.47

CLAIMS

Final	Original	Final	Original	Final	Original	Final	Original	Final	Original	Final	Original	Final	Original	Final	Original

NONE (Assistant Examiner) (Date)	**Total Claims Allowed:** 14	
/Edwin A Young/ Primary Examiner, Art Unit 3655 (Primary Examiner) (Date) 21 December 2024	O.G. Print Claim(s) 1	O.G. Print Figure 2

U.S. Patent and Trademark Office Part of Paper No.: 20241221A

Doc code: IDS
Doc description: Information Disclosure Statement (IDS) Filed

PTO/SB/08a (01-22)
Approved for use through 05/31/2024. OMB 0651-0031
U.S. Patent and Trademark Office; U.S. DEPARTMENT OF COMMERCE
Under the Paperwork Reduction Act of 1995, no persons are required to respond to a collection of information unless it contains a valid OMB control number.

INFORMATION DISCLOSURE STATEMENT BY APPLICANT

(Not for submission under 37 CFR 1.99)

Application Number	18928135
Filing Date	2024-10-27
First Named Inventor	Bennet Langlotz
Art Unit	3655
Examiner Name	Young, Edwin
Attorney Docket Number	BKL-11C5

U.S.PATENTS Remove

Examiner Initial*	Cite No	Patent Number	Kind Code[1]	Issue Date	Name of Patentee or Applicant of cited Document	Pages,Columns,Lines where Relevant Passages or Relevant Figures Appear
	1	11001301		2021-05-11	Joos et al.	
	2	12049217		2024-07-30	Hashimoto	
	3	12084047		2024-09-10	Hiei et al.	
	4	9381922		2016-07-05	Wysietzki et al.	
	5	12151677		2024-11-26	Tamori	
	6	12065130		2024-08-20	Chen et al.	
	7	9085321		2015-07-21	Noh	
	8	11623636		2023-04-11	Tsujino et al.	

PC 6.1.24

ALL REFERENCES CONSIDERED EXCEPT WHERE LINED THROUGH. /EAY/

INFORMATION DISCLOSURE STATEMENT BY APPLICANT (Not for submission under 37 CFR 1.99)		
	Application Number	18928135
	Filing Date	2024-10-27
	First Named Inventor	Bennet Langlotz
	Art Unit	3655
	Examiner Name	Young, Edwin
	Attorney Docket Number	BKL-11C5

	9	9219887		2015-12-22	Iga et al.	

If you wish to add additional U.S. Patent citation information please click the Add button. Add

U.S.PATENT APPLICATION PUBLICATIONS Remove

Examiner Initial*	Cite No	Publication Number	Kind Code[1]	Publication Date	Name of Patentee or Applicant of cited Document	Pages,Columns,Lines where Relevant Passages or Relevant Figures Appear
	1					

If you wish to add additional U.S. Published Application citation information please click the Add button. Add

FOREIGN PATENT DOCUMENTS Remove

Examiner Initial*	Cite No	Foreign Document Number[3]	Country Code[2] ¡	Kind Code[4]	Publication Date	Name of Patentee or Applicant of cited Document	Pages,Columns,Lines where Relevant Passages or Relevant Figures Appear	T[5]
	1							☐

If you wish to add additional Foreign Patent Document citation information please click the Add button Add

NON-PATENT LITERATURE DOCUMENTS Remove

Examiner Initials*	Cite No	Include name of the author (in CAPITAL LETTERS), title of the article (when appropriate), title of the item (book, magazine, journal, serial, symposium, catalog, etc), date, pages(s), volume-issue number(s), publisher, city and/or country where published.	T[5]
	1		☐

If you wish to add additional non-patent literature document citation information please click the Add button Add

EXAMINER SIGNATURE

Examiner Signature	/Edwin A Young/	Date Considered	12/21/2024

*EXAMINER: Initial if reference considered, whether or not citation is in conformance with MPEP 609. Draw line through a citation if not in conformance and not considered. Include copy of this form with next communication to applicant.

PC 6.1.24

ALL REFERENCES CONSIDERED EXCEPT WHERE LINED THROUGH. /EAY/

INFORMATION DISCLOSURE STATEMENT BY APPLICANT (Not for submission under 37 CFR 1.99)		
	Application Number	18928135
	Filing Date	2024-10-27
	First Named Inventor	Bennet Langlotz
	Art Unit	3655
	Examiner Name	Young, Edwin
	Attorney Docket Number	BKL-11C5

[1] See Kind Codes of USPTO Patent Documents at www.USPTO.GOV or MPEP 901.04. [2] Enter office that issued the document, by the two-letter code (WIPO Standard ST.3). [3] For Japanese patent documents, the indication of the year of the reign of the Emperor must precede the serial number of the patent document. [4] Kind of document by the appropriate symbols as indicated on the document under WIPO Standard ST.16 if possible. [5] Applicant is to place a check mark here if English language translation is attached.

PC 6.1.24

ALL REFERENCES CONSIDERED EXCEPT WHERE LINED THROUGH. /EAY/

INFORMATION DISCLOSURE STATEMENT BY APPLICANT (Not for submission under 37 CFR 1.99)		
	Application Number	18928135
	Filing Date	2024-10-27
	First Named Inventor	Bennet Langlotz
	Art Unit	3655
	Examiner Name	Young, Edwin
	Attorney Docket Number	BKL-11C5

CERTIFICATION STATEMENT

Please see 37 CFR 1.97(e) to make the appropriate selection(s):

☐ That each item of information contained in the information disclosure statement was first cited in any communication from a foreign patent office in a counterpart foreign application not more than three months prior to the filing of the information disclosure statement. See 37 CFR 1.97(e)(1).

OR

☒ That no item of information contained in the information disclosure statement was cited in a communication from a foreign patent office in a counterpart foreign application, and, to the knowledge of the person signing the certification after making reasonable inquiry, no item of information contained in the information disclosure statement was known to any individual designated in 37 CFR 1.56(c) more than three months prior to the filing of the information disclosure statement. See 37 CFR 1.97(e)(2).

☐ See attached certification statement.

☐ A certification statement is not submitted herewith.

FEE

☐ The fee set forth in 37 CFR 1.17 (p) has been submitted herewith.

COPIES

☐ An identification of an earlier application pursuant to 37 CFR 1.98 (d) (1) is attached.

SIGNATURE

A signature of the applicant or representative is required in accordance with CFR 1.33, 10.18. Please see CFR 1.4(d) for the form of the signature.

Signature	/bennet langlotz/	Date (YYYY-MM-DD)	2024-12-05
Name/Print	Bennet Langlotz	Registration Number	35928

This collection of information is required by 37 CFR 1.97 and 1.98. The information is required to obtain or retain a benefit by the public which is to file (and by the USPTO to process) an application. Confidentiality is governed by 35 U.S.C. 122 and 37 CFR 1.14. This collection is estimated to take 1 hour to complete, including gathering, preparing and submitting the completed application form to the USPTO. Time will vary depending upon the individual case. Any comments on the amount of time you require to complete this form and/or suggestions for reducing this burden, should be sent to the Chief Information Officer, U.S. Patent and Trademark Office, U.S. Department of Commerce, P.O. Box 1450, Alexandria, VA 22313-1450. DO NOT SEND FEES OR COMPLETED FORMS TO THIS ADDRESS. **SEND TO: Commissioner for Patents, P.O. Box 1450, Alexandria, VA 22313-1450.**

PC 6.1.24

ALL REFERENCES CONSIDERED EXCEPT WHERE LINED THROUGH. /EAY/

Privacy Act Statement

The Privacy Act of 1974 (P.L. 93-579) requires that you be given certain information in connection with your submission of the attached form related to a patent application or patent. Accordingly, pursuant to the requirements of the Act, please be advised that: (1) the general authority for the collection of this information is 35 U.S.C. 2(b)(2); (2) furnishing of the information solicited is voluntary; and (3) the principal purpose for which the information is used by the U.S. Patent and Trademark Office is to process and/or examine your submission related to a patent application or patent. If you do not furnish the requested information, the U.S. Patent and Trademark Office may not be able to process and/or examine your submission, which may result in termination of proceedings or abandonment of the application or expiration of the patent.

The information provided by you in this form will be subject to the following routine uses:

1. The information on this form will be treated confidentially to the extent allowed under the Freedom of Information Act (5 U.S.C. 552) and the Privacy Act (5 U.S.C. 552a). Records from this system of records may be disclosed to the Department of Justice to determine whether the Freedom of Information Act requires disclosure of these record s.

2. A record from this system of records may be disclosed, as a routine use, in the course of presenting evidence to a court, magistrate, or administrative tribunal, including disclosures to opposing counsel in the course of settlement negotiations.

3. A record in this system of records may be disclosed, as a routine use, to a Member of Congress submitting a request involving an individual, to whom the record pertains, when the individual has requested assistance from the Member with respect to the subject matter of the record.

4. A record in this system of records may be disclosed, as a routine use, to a contractor of the Agency having need for the information in order to perform a contract. Recipients of information shall be required to comply with the requirements of the Privacy Act of 1974, as amended, pursuant to 5 U.S.C. 552a(m).

5. A record related to an International Application filed under the Patent Cooperation Treaty in this system of records may be disclosed, as a routine use, to the International Bureau of the World Intellectual Property Organization, pursuant to the Patent Cooperation Treaty.

6. A record in this system of records may be disclosed, as a routine use, to another federal agency for purposes of National Security review (35 U.S.C. 181) and for review pursuant to the Atomic Energy Act (42 U.S.C. 218(c)).

7. A record from this system of records may be disclosed, as a routine use, to the Administrator, General Services, or his/her designee, during an inspection of records conducted by GSA as part of that agency's responsibility to recommend improvements in records management practices and programs, under authority of 44 U.S.C. 2904 and 2906. Such disclosure shall be made in accordance with the GSA regulations governing inspection of records for this purpose, and any other relevant (i.e., GSA or Commerce) directive. Such disclosure shall not be used to make determinations about individuals.

8. A record from this system of records may be disclosed, as a routine use, to the public after either publication of the application pursuant to 35 U.S.C. 122(b) or issuance of a patent pursuant to 35 U.S.C. 151. Further, a record may be disclosed, subject to the limitations of 37 CFR 1.14, as a routine use, to the public if the record was filed in an application which became abandoned or in which the proceedings were terminated and which application is referenced by either a published application, an application open to public inspections or an issued patent.

9. A record from this system of records may be disclosed, as a routine use, to a Federal, State, or local law enforcement agency, if the USPTO becomes aware of a violation or potential violation of law or regulation.

Bibliographic Data

Application No: 18/928,135

Foreign Priority claimed: ○ Yes ◉ No

35 USC 119 (a-d) conditions met: ☐ Yes ☑ No | ☐ Met After Allowance

Verified and Acknowledged: /Edwin A Young/ (Examiner's Signature) | (Initials)

Title: VEHICLE GEAR SELECTION CONTROL

FILING or 371(c) DATE	CLASS	GROUP ART UNIT	ATTORNEY DOCKET NO.
10/27/2024 **RULE**	701	3655	BKL-11C5

APPLICANTS

Bulletproof Property Management, LLC, Cheyenne, WY, UNITED STATES

INVENTORS

Bennet Langlotz, Dallas, TX, UNITED STATES

CONTINUING DATA

This application is a CON of 18403221 01/03/2024

18403221 is a CIP of 18205823 06/05/2023 PAT 11932230

FOREIGN APPLICATIONS

IF REQUIRED, FOREIGN LICENSE GRANTED**

10/29/2024

** **SMALL ENTITY** **

STATE OR COUNTRY

UNITED STATES

ADDRESS

LANGLOTZ PATENT & TRADEMARK WORKS, LLC
PO BOX 660675 #37585
Dallas, TX 75266-0675
UNITED STATES

FILING FEE RECEIVED

$2,400

PE2E SEARCH - Search History (Prior Art)

Ref #	Hits	Search Query	DBs	Default Operator	Plurals	British Equivalents	Time Stamp
L1	6	"18205823"	(US-PGPUB; USPAT; USOCR; FIT (AU, AP, AT, BE, BG, BR, BY, CA, CH, CN, CS, CU, CZ, DD, DE, DK, EA, EE, EP, ES, FI, FR, GB, HR, HU, ID, IE, IL, IS, IT, JP, KR, LT, LU, LV, MA, OA, RU, SU, WO, MC, MD, MY, NL, NO, NZ, PH, PL, PT, RO, RS, SE, SG, SI, SK, TH, TN, TR, TW, UA, VN); FPRS; EPO; JPO; DERWENT; IBM_TDB)	OR	ON	ON	2023/12/13 05:42 PM
L2	55	bulletproof.asn.	(US-PGPUB; USPAT; USOCR; FIT (AU, AP, AT, BE, BG, BR, BY, CA, CH, CN, CS, CU, CZ, DD, DE, DK, EA, EE, EP, ES, FI, FR, GB, HR, HU, ID, IE, IL, IS, IT, JP, KR, LT, LU, LV, MA, OA, RU, SU, WO, MC, MD, MY, NL, NO, NZ, PH, PL, PT, RO, RS, SE, SG, SI, SK, TH, TN, TR, TW, UA, VN); FPRS; EPO; JPO; DERWENT; IBM_TDB)	OR	ON	ON	2023/12/13 05:43 PM
L3	3	2 AND ((forward front$4 drive) WITH (revers$3 back$4))	(US-PGPUB; USPAT; USOCR; FIT (AU, AP, AT, BE, BG, BR, BY, CA, CH, CN, CS, CU, CZ, DD, DE, DK, EA, EE, EP, ES, FI, FR, GB, HR, HU, ID, IE, IL, IS, IT, JP, KR, LT, LU, LV, MA, OA, RU, SU, WO, MC, MD, MY, NL, NO, NZ, PH, PL, PT, RO, RS, SE, SG, SI, SK, TH, TN, TR, TW, UA, VN); FPRS; EPO; JPO; DERWENT; IBM_TDB)	OR	ON	ON	2023/12/13 05:44 PM
L4	9	1 3	(US-PGPUB; USPAT; USOCR; FIT (AU, AP, AT, BE, BG, BR, BY,	OR	ON	ON	2023/12/13 05:45 PM

			CA, CH, CN, CS, CU, CZ, DD, DE, DK, EA, EE, EP, ES, FI, FR, GB, HR, HU, ID, IE, IL, IS, IT, JP, KR, LT, LU, LV, MA, OA, RU, SU, WO, MC, MD, MY, NL, NO, NZ, PH, PL, PT, RO, RS, SE, SG, SI, SK, TH, TN, TR, TW, UA, VN); FPRS; EPO; JPO; DERWENT; IBM_TDB)				
L5	8	langlotz-bennet.in.	(US-PGPUB; USPAT; USOCR; FIT (AU, AP, AT, BE, BG, BR, BY, CA, CH, CN, CS, CU, CZ, DD, DE, DK, EA, EE, EP, ES, FI, FR, GB, HR, HU, ID, IE, IL, IS, IT, JP, KR, LT, LU, LV, MA, OA, RU, SU, WO, MC, MD, MY, NL, NO, NZ, PH, PL, PT, RO, RS, SE, SG, SI, SK, TH, TN, TR, TW, UA, VN); FPRS; EPO; JPO; DERWENT; IBM_TDB)	OR	ON	ON	2023/12/13 05:45 PM
L6	17	4 5	(US-PGPUB; USPAT; USOCR; FIT (AU, AP, AT, BE, BG, BR, BY, CA, CH, CN, CS, CU, CZ, DD, DE, DK, EA, EE, EP, ES, FI, FR, GB, HR, HU, ID, IE, IL, IS, IT, JP, KR, LT, LU, LV, MA, OA, RU, SU, WO, MC, MD, MY, NL, NO, NZ, PH, PL, PT, RO, RS, SE, SG, SI, SK, TH, TN, TR, TW, UA, VN); FPRS; EPO; JPO; DERWENT; IBM_TDB)	OR	ON	ON	2023/12/13 05:50 PM
L7	67997	b60w10/02.cpc.	(US-PGPUB; USPAT; USOCR; FIT (AU, AP, AT, BE, BG, BR, BY, CA, CH, CN, CS, CU, CZ, DD, DE, DK, EA, EE, EP, ES, FI, FR, GB, HR, HU, ID, IE, IL, IS, IT, JP, KR, LT, LU, LV, MA, OA, RU, SU, WO, MC, MD, MY, NL, NO, NZ, PH, PL, PT, RO, RS, SE, SG, SI, SK,	OR	ON	ON	2023/12/13 05:50 PM

			TH, TN, TR, TW, UA, VN); FPRS; EPO; JPO; DERWENT; IBM_TDB)				
L8	15329	7 AND ((forward front$4 drive) WITH (revers$3 back$4))	(US-PGPUB; USPAT; USOCR; FIT (AP, AT, AU, BE, BG, BR, BY, CA, CH, CN, CS, CU, CZ, DD, DE, DK, EA, EE, EP, ES, FI, FR, GB, HR, HU, ID, IE, IL, IS, IT, JP, KR, LT, LU, LV, MA, MC, MD, MY, NL, NO, NZ, OA, PH, PL, PT, RO, RS, RU, SE, SG, SI, SK, SU, TH, TN, TR, TW, UA, VN, WO); FPRS; EPO; JPO; DERWENT; IBM_TDB)	OR	ON	ON	2023/12/13 05:50 PM
L9	4769	7 AND ((forward front$4 drive) WITH (revers$3 back$4) WITH ((steer$3 near4 angle) OR (park$3 near6 (tim$3 distance velocity speed)) OR (location position$3)))	(US-PGPUB; USPAT; USOCR; FIT (AP, AT, AU, BE, BG, BR, BY, CA, CH, CN, CS, CU, CZ, DD, DE, DK, EA, EE, EP, ES, FI, FR, GB, HR, HU, ID, IE, IL, IS, IT, JP, KR, LT, LU, LV, MA, MC, MD, MY, NL, NO, NZ, OA, PH, PL, PT, RO, RS, RU, SE, SG, SI, SK, SU, TH, TN, TR, TW, UA, VN, WO); FPRS; EPO; JPO; DERWENT; IBM_TDB)	OR	ON	ON	2023/12/13 05:52 PM
L10	3549	7 AND (((forward front$4 drive) near4 (revers$3 back$4)) WITH ((steer$3 near4 angle) OR (park$3 near6 (tim$3 distance velocity speed)) OR (location position$3)))	(US-PGPUB; USPAT; USOCR; FIT (AP, AT, AU, BE, BG, BR, BY, CA, CH, CN, CS, CU, CZ, DD, DE, DK, EA, EE, EP, ES, FI, FR, GB, HR, HU, ID, IE, IL, IS, IT, JP, KR, LT, LU, LV, MA, MC, MD, MY, NL, NO, NZ, OA, PH, PL, PT, RO, RS, RU, SE, SG, SI, SK, SU, TH, TN, TR, TW, UA, VN, WO); FPRS; EPO; JPO; DERWENT; IBM_TDB)	OR	ON	ON	2023/12/13 05:52 PM
L11	1822	7 AND (((forward front$4 drive) near4 (revers$3 back$4)) WITH (shift$3 chang$3)	(US-PGPUB; USPAT; USOCR; FIT (AP, AT, AU, BE, BG, BR, BY, CA, CH, CN, CS, CU,	OR	ON	ON	2023/12/13 05:53 PM

		WITH ((steer$3 near4 angle) OR (park$3 near6 (tim$3 distance velocity speed)) OR (location position$3)))	CZ, DD, DE, DK, EA, EE, EP, ES, FI, FR, GB, HR, HU, ID, IE, IL, IS, IT, JP, KR, LT, LU, LV, MA, MC, MD, MY, NL, NO, NZ, OA, PH, PL, PT, RO, RS, RU, SE, SG, SI, SK, SU, TH, TN, TR, TW, UA, VN, WO); FPRS; EPO; JPO; DERWENT; IBM_TDB)				
L12	1211	7 AND (((forward front$4 drive) near6 (revers$3 back$4) near6 (shift$3 chang$3)) WITH ((steer$3 near4 angle) OR (park$3 near6 (tim$3 distance velocity speed)) OR (location position$3)))	(US-PGPUB; USPAT; USOCR; FIT (AP, AT, AU, BE, BG, BR, BY, CA, CH, CN, CS, CU, CZ, DD, DE, DK, EA, EE, EP, ES, FI, FR, GB, HR, HU, ID, IE, IL, IS, IT, JP, KR, LT, LU, LV, MA, MC, MD, MY, NL, NO, NZ, OA, PH, PL, PT, RO, RS, RU, SE, SG, SI, SK, SU, TH, TN, TR, TW, UA, VN, WO); FPRS; EPO; JPO; DERWENT; IBM_TDB)	OR	ON	ON	2023/12/13 05:54 PM
L13	1211	7 AND (((forward front$4 drive) near6 (revers$3 back$4) near6 (shift$3 chang$3 auto$shift$3)) WITH ((steer$3 near4 angle) OR (park$3 near6 (tim$3 distance velocity speed)) OR (location position$3)))	(US-PGPUB; USPAT; USOCR; FIT (AP, AT, AU, BE, BG, BR, BY, CA, CH, CN, CS, CU, CZ, DD, DE, DK, EA, EE, EP, ES, FI, FR, GB, HR, HU, ID, IE, IL, IS, IT, JP, KR, LT, LU, LV, MA, MC, MD, MY, NL, NO, NZ, OA, PH, PL, PT, RO, RS, RU, SE, SG, SI, SK, SU, TH, TN, TR, TW, UA, VN, WO); FPRS; EPO; JPO; DERWENT; IBM_TDB)	OR	ON	ON	2023/12/13 05:55 PM
L14	1211	7 AND (((forward front$4 drive) near6 (revers$3 back$4) near6 (shift$3 chang$3 auto$shift$3 offer$3 suggest$3)) WITH ((steer$3 near4 angle) OR (park$3 near6 (tim$3 distance velocity speed)) OR (location position$3)))	(US-PGPUB; USPAT; USOCR; FIT (AP, AT, AU, BE, BG, BR, BY, CA, CH, CN, CS, CU, CZ, DD, DE, DK, EA, EE, EP, ES, FI, FR, GB, HR, HU, ID, IE, IL, IS, IT, JP, KR, LT, LU, LV, MA, MC, MD, MY, NL, NO, NZ, OA, PH, PL, PT, RO, RS, RU, SE, SG, SI, SK, SU, TH, TN, TR, TW, UA, VN,	OR	ON	ON	2023/12/13 05:56 PM

			WO); FPRS; EPO; JPO; DERWENT; IBM_TDB)				
L15	1053	7 AND (((forward front$4 drive) near6 (revers$3 back$4) near6 (shift$3 chang$3 auto$shift$3 offer$3 suggest$3)) near6 ((steer$3 near4 angle) OR (park$3 near6 (tim$3 distance velocity speed)) OR (location position$3)))	(US-PGPUB; USPAT; USOCR; FIT (AP, AT, AU, BE, BG, BR, BY, CA, CH, CN, CS, CU, CZ, DD, DE, DK, EA, EE, EP, ES, FI, FR, GB, HR, HU, ID, IE, IL, IS, IT, JP, KR, LT, LU, LV, MA, MC, MD, MY, NL, NO, NZ, OA, PH, PL, PT, RO, RS, RU, SE, SG, SI, SK, SU, TH, TN, TR, TW, UA, VN, WO); FPRS; EPO; JPO; DERWENT; IBM_TDB)	OR	ON	ON	2023/12/13 05:57 PM
L16	636	7 AND (((forward front$4 drive) near4 (revers$3 back$4) near4 (shift$3 chang$3 auto$shift$3 offer$3 suggest$3)) near4 ((steer$3 near2 angle) OR (park$3 near4 (tim$3 distance velocity speed)) OR (location position$3)))	(US-PGPUB; USPAT; USOCR; FIT (AP, AT, AU, BE, BG, BR, BY, CA, CH, CN, CS, CU, CZ, DD, DE, DK, EA, EE, EP, ES, FI, FR, GB, HR, HU, ID, IE, IL, IS, IT, JP, KR, LT, LU, LV, MA, MC, MD, MY, NL, NO, NZ, OA, PH, PL, PT, RO, RS, RU, SE, SG, SI, SK, SU, TH, TN, TR, TW, UA, VN, WO); FPRS; EPO; JPO; DERWENT; IBM_TDB)	OR	ON	ON	2023/12/13 05:57 PM
L17	29	7 AND (((forward front$4 drive) near4 (revers$3 back$4) near4 (shift$3 chang$3 auto$shift$3 offer$3 suggest$3)) near4 ((steer$3 near2 angle) OR (park$3 near4 (tim$3 distance velocity speed)) OR ((location position$3) near2 vehicle)))	(US-PGPUB; USPAT; USOCR; FIT (AP, AT, AU, BE, BG, BR, BY, CA, CH, CN, CS, CU, CZ, DD, DE, DK, EA, EE, EP, ES, FI, FR, GB, HR, HU, ID, IE, IL, IS, IT, JP, KR, LT, LU, LV, MA, MC, MD, MY, NL, NO, NZ, OA, PH, PL, PT, RO, RS, RU, SE, SG, SI, SK, SU, TH, TN, TR, TW, UA, VN, WO); FPRS; EPO; JPO; DERWENT; IBM_TDB)	OR	ON	ON	2023/12/13 05:59 PM
L18	217	7 AND (((forward front$4 drive) WITH (revers$3 back$4) WITH (shift$3 chang$3 auto$shift$3 offer$3	(US-PGPUB; USPAT; USOCR; FIT (AP, AT, AU, BE, BG, BR, BY, CA, CH, CN, CS, CU, CZ, DD, DE, DK, EA,	OR	ON	ON	2023/12/13 06:00 PM

		suggest$3)) WITH ((steer$3 near2 angle) OR (park$3 near4 (tim$3 distance velocity speed)) OR ((location position$3) near2 vehicle)))	EE, EP, ES, FI, FR, GB, HR, HU, ID, IE, IL, IS, IT, JP, KR, LT, LU, LV, MA, MC, MD, MY, NL, NO, NZ, OA, PH, PL, PT, RO, RS, RU, SE, SG, SI, SK, SU, TH, TN, TR, TW, UA, VN, WO); FPRS; EPO; JPO; DERWENT; IBM_TDB)				
L20	234	6 18	(US-PGPUB; USPAT; USOCR; FIT (AU, AP, AT, BE, BG, BR, BY, CA, CH, CN, CS, CU, CZ, DD, DE, DK, EA, EE, EP, ES, FI, FR, GB, HR, HU, ID, IE, IL, IS, IT, JP, KR, LT, LU, LV, MA, OA, RU, SU, WO, MC, MD, MY, NL, NO, NZ, PH, PL, PT, RO, RS, SE, SG, SI, SK, TH, TN, TR, TW, UA, VN); FPRS; EPO; JPO; DERWENT; IBM_TDB)	OR	ON	ON	2023/12/13 06:14 PM
L21	40542	b60w10/20.cpc.	(US-PGPUB; USPAT; USOCR; FIT (AU, AP, AT, BE, BG, BR, BY, CA, CH, CN, CS, CU, CZ, DD, DE, DK, EA, EE, EP, ES, FI, FR, GB, HR, HU, ID, IE, IL, IS, IT, JP, KR, LT, LU, LV, MA, OA, RU, SU, WO, MC, MD, MY, NL, NO, NZ, PH, PL, PT, RO, RS, SE, SG, SI, SK, TH, TN, TR, TW, UA, VN); FPRS; EPO; JPO; DERWENT; IBM_TDB)	OR	ON	ON	2023/12/13 06:14 PM
L22	484	21 AND (((forward front$4 drive) WITH (revers$3 back$4) WITH (shift$3 chang$3 auto$shift$3 offer$3 suggest$3)) WITH ((steer$3 near2 angle) OR (park$3 near4 (tim$3 distance velocity speed)) OR ((location position$3) near2 vehicle)))	(US-PGPUB; USPAT; USOCR; FIT (AP, AT, AU, BE, BG, BR, BY, CA, CH, CN, CS, CU, CZ, DD, DE, DK, EA, EE, EP, ES, FI, FR, GB, HR, HU, ID, IE, IL, IS, IT, JP, KR, LT, LU, LV, MA, MC, MD, MY, NL, NO, NZ, OA, PH, PL, PT, RO, RS, RU, SE, SG, SI, SK, SU, TH, TN, TR, TW, UA, VN, WO); FPRS; EPO;	OR	ON	ON	2023/12/13 06:14 PM

			JPO; DERWENT; IBM_TDB)				
L23	477	22 NOT 20	(US-PGPUB; USPAT; USOCR; FIT (AU, AP, AT, BE, BG, BR, BY, CA, CH, CN, CS, CU, CZ, DD, DE, DK, EA, EE, EP, ES, FI, FR, GB, HR, HU, ID, IE, IL, IS, IT, JP, KR, LT, LU, LV, MA, OA, RU, SU, WO, MC, MD, MY, NL, NO, NZ, PH, PL, PT, RO, RS, SE, SG, SI, SK, TH, TN, TR, TW, UA, VN); FPRS; EPO; JPO; DERWENT; IBM_TDB)	OR	ON	ON	2023/12/13 06:14 PM
L24	711	20 22	(US-PGPUB; USPAT; USOCR; FIT (AU, AP, AT, BE, BG, BR, BY, CA, CH, CN, CS, CU, CZ, DD, DE, DK, EA, EE, EP, ES, FI, FR, GB, HR, HU, ID, IE, IL, IS, IT, JP, KR, LT, LU, LV, MA, OA, RU, SU, WO, MC, MD, MY, NL, NO, NZ, PH, PL, PT, RO, RS, SE, SG, SI, SK, TH, TN, TR, TW, UA, VN); FPRS; EPO; JPO; DERWENT; IBM_TDB)	OR	ON	ON	2023/12/13 06:50 PM
L25	41076	b60w10/10.cpc.	(US-PGPUB; USPAT; USOCR; FIT (AU, AP, AT, BE, BG, BR, BY, CA, CH, CN, CS, CU, CZ, DD, DE, DK, EA, EE, EP, ES, FI, FR, GB, HR, HU, ID, IE, IL, IS, IT, JP, KR, LT, LU, LV, MA, OA, RU, SU, WO, MC, MD, MY, NL, NO, NZ, PH, PL, PT, RO, RS, SE, SG, SI, SK, TH, TN, TR, TW, UA, VN); FPRS; EPO; JPO; DERWENT; IBM_TDB)	OR	ON	ON	2023/12/13 06:50 PM
L26	301	25 AND (((forward front$4 drive) WITH (revers$3 back$4) WITH (shift$3 chang$3 auto$shift$3 offer$3 suggest$3)) WITH	(US-PGPUB; USPAT; USOCR; FIT (AP, AT, AU, BE, BG, BR, BY, CA, CH, CN, CS, CU, CZ, DD, DE, DK, EA, EE, EP, ES, FI, FR, GB,	OR	ON	ON	2023/12/13 06:50 PM

		((steer$3 near2 angle) OR (park$3 near4 (tim$3 distance velocity speed)) OR ((location position$3) near2 vehicle)))	HR, HU, ID, IE, IL, IS, IT, JP, KR, LT, LU, LV, MA, MC, MD, MY, NL, NO, NZ, OA, PH, PL, PT, RO, RS, RU, SE, SG, SI, SK, SU, TH, TN, TR, TW, UA, VN, WO); FPRS; EPO; JPO; DERWENT; IBM_TDB)				
L27	170	26 NOT 24	(US-PGPUB; USPAT; USOCR; FIT (AU, AP, AT, BE, BG, BR, BY, CA, CH, CN, CS, CU, CZ, DD, DE, DK, EA, EE, EP, ES, FI, FR, GB, HR, HU, ID, IE, IL, IS, IT, JP, KR, LT, LU, LV, MA, OA, RU, SU, WO, MC, MD, MY, NL, NO, NZ, PH, PL, PT, RO, RS, SE, SG, SI, SK, TH, TN, TR, TW, UA, VN); FPRS; EPO; JPO; DERWENT; IBM_TDB)	OR	ON	ON	2023/12/13 06:50 PM
L28	881	24 26	(US-PGPUB; USPAT; USOCR; FIT (AU, AP, AT, BE, BG, BR, BY, CA, CH, CN, CS, CU, CZ, DD, DE, DK, EA, EE, EP, ES, FI, FR, GB, HR, HU, ID, IE, IL, IS, IT, JP, KR, LT, LU, LV, MA, OA, RU, SU, WO, MC, MD, MY, NL, NO, NZ, PH, PL, PT, RO, RS, SE, SG, SI, SK, TH, TN, TR, TW, UA, VN); FPRS; EPO; JPO; DERWENT; IBM_TDB)	OR	ON	ON	2023/12/13 06:59 PM
L29	1024	b60w2530/201.cpc.	(US-PGPUB; USPAT; USOCR; FIT (AU, AP, AT, BE, BG, BR, BY, CA, CH, CN, CS, CU, CZ, DD, DE, DK, EA, EE, EP, ES, FI, FR, GB, HR, HU, ID, IE, IL, IS, IT, JP, KR, LT, LU, LV, MA, OA, RU, SU, WO, MC, MD, MY, NL, NO, NZ, PH, PL, PT, RO, RS, SE, SG, SI, SK, TH, TN, TR, TW, UA, VN); FPRS; EPO; JPO; DERWENT;	OR	ON	ON	2023/12/13 07:00 PM

			IBM_TDB)				
L30	11	29 AND (((forward front$4 drive) WITH (revers$3 back$4) WITH (shift$3 chang$3 auto$shift$3 offer$3 suggest$3)) WITH ((steer$3 near2 angle) OR (park$3 near4 (tim$3 distance velocity speed)) OR ((location position$3) near2 vehicle)))	(US-PGPUB; USPAT; USOCR; FIT (AP, AT, AU, BE, BG, BR, BY, CA, CH, CN, CS, CU, CZ, DD, DE, DK, EA, EE, EP, ES, FI, FR, GB, HR, HU, ID, IE, IL, IS, IT, JP, KR, LT, LU, LV, MA, MC, MD, MY, NL, NO, NZ, OA, PH, PL, PT, RO, RS, RU, SE, SG, SI, SK, SU, TH, TN, TR, TW, UA, VN, WO); FPRS; EPO; JPO; DERWENT; IBM_TDB)	OR	ON	ON	2023/12/13 07:00 PM
L31	8	30 NOT 28	(US-PGPUB; USPAT; USOCR; FIT (AU, AP, AT, BE, BG, BR, BY, CA, CH, CN, CS, CU, CZ, DD, DE, DK, EA, EE, EP, ES, FI, FR, GB, HR, HU, ID, IE, IL, IS, IT, JP, KR, LT, LU, LV, MA, OA, RU, SU, WO, MC, MD, MY, NL, NO, NZ, PH, PL, PT, RO, RS, SE, SG, SI, SK, TH, TN, TR, TW, UA, VN); FPRS; EPO; JPO; DERWENT; IBM_TDB)	OR	ON	ON	2023/12/13 07:00 PM
L32	889	28 30	(US-PGPUB; USPAT; USOCR; FIT (AU, AP, AT, BE, BG, BR, BY, CA, CH, CN, CS, CU, CZ, DD, DE, DK, EA, EE, EP, ES, FI, FR, GB, HR, HU, ID, IE, IL, IS, IT, JP, KR, LT, LU, LV, MA, OA, RU, SU, WO, MC, MD, MY, NL, NO, NZ, PH, PL, PT, RO, RS, SE, SG, SI, SK, TH, TN, TR, TW, UA, VN); FPRS; EPO; JPO; DERWENT; IBM_TDB)	OR	ON	ON	2023/12/13 08:40 PM
L33	1798	b60w2530/18.cpc.	(US-PGPUB; USPAT; USOCR; FIT (AU, AP, AT, BE, BG, BR, BY, CA, CH, CN, CS, CU, CZ, DD, DE, DK, EA, EE, EP, ES, FI, FR, GB, HR, HU, ID, IE, IL, IS,	OR	ON	ON	2023/12/13 08:40 PM

			IT, JP, KR, LT, LU, LV, MA, OA, RU, SU, WO, MC, MD, MY, NL, NO, NZ, PH, PL, PT, RO, RS, SE, SG, SI, SK, TH, TN, TR, TW, UA, VN); FPRS; EPO; JPO; DERWENT; IBM_TDB)				
L34	7	33 AND (((forward front$4 drive) WITH (revers$3 back$4) WITH (shift$3 chang$3 auto$shift$3 offer$3 suggest$3)) WITH ((steer$3 near2 angle) OR (park$3 near4 (tim$3 distance velocity speed)) OR ((location position$3) near2 vehicle)))	(US-PGPUB; USPAT; USOCR; FIT (AP, AT, AU, BE, BG, BR, BY, CA, CH, CN, CS, CU, CZ, DD, DE, DK, EA, EE, EP, ES, FI, FR, GB, HR, HU, ID, IE, IL, IS, IT, JP, KR, LT, LU, LV, MA, MC, MD, MY, NL, NO, NZ, OA, PH, PL, PT, RO, RS, RU, SE, SG, SI, SK, SU, TH, TN, TR, TW, UA, VN, WO); FPRS; EPO; JPO; DERWENT; IBM_TDB)	OR	ON	ON	2023/12/13 08:41 PM
L35	3	34 NOT 32	(US-PGPUB; USPAT; USOCR; FIT (AU, AP, AT, BE, BG, BR, BY, CA, CH, CN, CS, CU, CZ, DD, DE, DK, EA, EE, EP, ES, FI, FR, GB, HR, HU, ID, IE, IL, IS, IT, JP, KR, LT, LU, LV, MA, OA, RU, SU, WO, MC, MD, MY, NL, NO, NZ, PH, PL, PT, RO, RS, SE, SG, SI, SK, TH, TN, TR, TW, UA, VN); FPRS; EPO; JPO; DERWENT; IBM_TDB)	OR	ON	ON	2023/12/13 08:42 PM
L36	892	32 34	(US-PGPUB; USPAT; USOCR; FIT (AU, AP, AT, BE, BG, BR, BY, CA, CH, CN, CS, CU, CZ, DD, DE, DK, EA, EE, EP, ES, FI, FR, GB, HR, HU, ID, IE, IL, IS, IT, JP, KR, LT, LU, LV, MA, OA, RU, SU, WO, MC, MD, MY, NL, NO, NZ, PH, PL, PT, RO, RS, SE, SG, SI, SK, TH, TN, TR, TW, UA, VN); FPRS; EPO; JPO; DERWENT; IBM_TDB)	OR	ON	ON	2023/12/13 08:42 PM

L37	909	b60w2540/045.cpc.	(US-PGPUB; USPAT; USOCR; FIT (AU, AP, AT, BE, BG, BR, BY, CA, CH, CN, CS, CU, CZ, DD, DE, DK, EA, EE, EP, ES, FI, FR, GB, HR, HU, ID, IE, IL, IS, IT, JP, KR, LT, LU, LV, MA, OA, RU, SU, WO, MC, MD, MY, NL, NO, NZ, PH, PL, PT, RO, RS, SE, SG, SI, SK, TH, TN, TR, TW, UA, VN); FPRS; EPO; JPO; DERWENT; IBM_TDB)	OR	ON	ON	2023/12/13 08:42 PM
L38	31	37 AND (((forward front$4 drive) WITH (revers$3 back$4) WITH (shift$3 chang$3 auto$shift$3 offer$3 suggest$3)) WITH ((steer$3 near2 angle) OR (park$3 near4 (tim$3 distance velocity speed)) OR ((location position$3) near2 vehicle)))	(US-PGPUB; USPAT; USOCR; FIT (AP, AT, AU, BE, BG, BR, BY, CA, CH, CN, CS, CU, CZ, DD, DE, DK, EA, EE, EP, ES, FI, FR, GB, HR, HU, ID, IE, IL, IS, IT, JP, KR, LT, LU, LV, MA, MC, MD, MY, NL, NO, NZ, OA, PH, PL, PT, RO, RS, RU, SE, SG, SI, SK, SU, TH, TN, TR, TW, UA, VN, WO); FPRS; EPO; JPO; DERWENT; IBM_TDB)	OR	ON	ON	2023/12/13 08:42 PM
L39	31	38 NOT 36	(US-PGPUB; USPAT; USOCR; FIT (AU, AP, AT, BE, BG, BR, BY, CA, CH, CN, CS, CU, CZ, DD, DE, DK, EA, EE, EP, ES, FI, FR, GB, HR, HU, ID, IE, IL, IS, IT, JP, KR, LT, LU, LV, MA, OA, RU, SU, WO, MC, MD, MY, NL, NO, NZ, PH, PL, PT, RO, RS, SE, SG, SI, SK, TH, TN, TR, TW, UA, VN); FPRS; EPO; JPO; DERWENT; IBM_TDB)	OR	ON	ON	2023/12/13 08:43 PM
L40	923	36 38	(US-PGPUB; USPAT; USOCR; FIT (AU, AP, AT, BE, BG, BR, BY, CA, CH, CN, CS, CU, CZ, DD, DE, DK, EA, EE, EP, ES, FI, FR, GB, HR, HU, ID, IE, IL, IS, IT, JP, KR, LT, LU, LV, MA, OA, RU, SU, WO,	OR	ON	ON	2023/12/13 08:46 PM

			MC, MD, MY, NL, NO, NZ, PH, PL, PT, RO, RS, SE, SG, SI, SK, TH, TN, TR, TW, UA, VN); FPRS; EPO; JPO; DERWENT; IBM_TDB)				
L41	35060	b60w2540/12.cpc.	(US-PGPUB; USPAT; USOCR; FIT (AU, AP, AT, BE, BG, BR, BY, CA, CH, CN, CS, CU, CZ, DD, DE, DK, EA, EE, EP, ES, FI, FR, GB, HR, HU, ID, IE, IL, IS, IT, JP, KR, LT, LU, LV, MA, OA, RU, SU, WO, MC, MD, MY, NL, NO, NZ, PH, PL, PT, RO, RS, SE, SG, SI, SK, TH, TN, TR, TW, UA, VN); FPRS; EPO; JPO; DERWENT; IBM_TDB)	OR	ON	ON	2023/12/13 08:46 PM
L42	233	41 AND (((forward front$4 drive) WITH (revers$3 back$4) WITH (shift$3 chang$3 auto$shift$3 offer$3 suggest$3)) WITH ((steer$3 near2 angle) OR (park$3 near4 (tim$3 distance velocity speed)) OR ((location position$3) near2 vehicle)))	(US-PGPUB; USPAT; USOCR; FIT (AP, AT, AU, BE, BG, BR, BY, CA, CH, CN, CS, CU, CZ, DD, DE, DK, EA, EE, EP, ES, FI, FR, GB, HR, HU, ID, IE, IL, IS, IT, JP, KR, LT, LU, LV, MA, MC, MD, MY, NL, NO, NZ, OA, PH, PL, PT, RO, RS, RU, SE, SG, SI, SK, SU, TH, TN, TR, TW, UA, VN, WO); FPRS; EPO; JPO; DERWENT; IBM_TDB)	OR	ON	ON	2023/12/13 08:46 PM
L43	143	42 NOT 40	(US-PGPUB; USPAT; USOCR; FIT (AU, AP, AT, BE, BG, BR, BY, CA, CH, CN, CS, CU, CZ, DD, DE, DK, EA, EE, EP, ES, FI, FR, GB, HR, HU, ID, IE, IL, IS, IT, JP, KR, LT, LU, LV, MA, OA, RU, SU, WO, MC, MD, MY, NL, NO, NZ, PH, PL, PT, RO, RS, SE, SG, SI, SK, TH, TN, TR, TW, UA, VN); FPRS; EPO; JPO; DERWENT; IBM_TDB)	OR	ON	ON	2023/12/13 08:46 PM
L44	1066	40 42	(US-PGPUB; USPAT;	OR	ON	ON	2023/12/13

			USOCR; FIT (AU, AP, AT, BE, BG, BR, BY, CA, CH, CN, CS, CU, CZ, DD, DE, DK, EA, EE, EP, ES, FI, FR, GB, HR, HU, ID, IE, IL, IS, IT, JP, KR, LT, LU, LV, MA, OA, RU, SU, WO, MC, MD, MY, NL, NO, NZ, PH, PL, PT, RO, RS, SE, SG, SI, SK, TH, TN, TR, TW, UA, VN); FPRS; EPO; JPO; DERWENT; IBM_TDB)				09:06 PM
L45	29711	b60w2540/18.cpc.	(US-PGPUB; USPAT; USOCR; FIT (AU, AP, AT, BE, BG, BR, BY, CA, CH, CN, CS, CU, CZ, DD, DE, DK, EA, EE, EP, ES, FI, FR, GB, HR, HU, ID, IE, IL, IS, IT, JP, KR, LT, LU, LV, MA, OA, RU, SU, WO, MC, MD, MY, NL, NO, NZ, PH, PL, PT, RO, RS, SE, SG, SI, SK, TH, TN, TR, TW, UA, VN); FPRS; EPO; JPO; DERWENT; IBM_TDB)	OR	ON	ON	2023/12/13 09:06 PM
L46	298	45 AND (((forward front$4 drive) WITH (revers$3 back$4) WITH (shift$3 chang$3 auto$shift$3 offer$3 suggest$3)) WITH ((steer$3 near2 angle) OR (park$3 near4 (tim$3 distance velocity speed)) OR ((location position$3) near2 vehicle)))	(US-PGPUB; USPAT; USOCR; FIT (AP, AT, AU, BE, BG, BR, BY, CA, CH, CN, CS, CU, CZ, DD, DE, DK, EA, EE, EP, ES, FI, FR, GB, HR, HU, ID, IE, IL, IS, IT, JP, KR, LT, LU, LV, MA, MC, MD, MY, NL, NO, NZ, OA, PH, PL, PT, RO, RS, RU, SE, SG, SI, SK, SU, TH, TN, TR, TW, UA, VN, WO); FPRS; EPO; JPO; DERWENT; IBM_TDB)	OR	ON	ON	2023/12/13 09:07 PM
L47	134	46 NOT 44	(US-PGPUB; USPAT; USOCR; FIT (AU, AP, AT, BE, BG, BR, BY, CA, CH, CN, CS, CU, CZ, DD, DE, DK, EA, EE, EP, ES, FI, FR, GB, HR, HU, ID, IE, IL, IS, IT, JP, KR, LT, LU, LV, MA, OA, RU, SU, WO, MC, MD, MY, NL, NO,	OR	ON	ON	2023/12/13 09:07 PM

			NZ, PH, PL, PT, RO, RS, SE, SG, SI, SK, TH, TN, TR, TW, UA, VN); FPRS; EPO; JPO; DERWENT; IBM_TDB)				
L48	1200	44 46	(US-PGPUB; USPAT; USOCR; FIT (AU, AP, AT, BE, BG, BR, BY, CA, CH, CN, CS, CU, CZ, DD, DE, DK, EA, EE, EP, ES, FI, FR, GB, HR, HU, ID, IE, IL, IS, IT, JP, KR, LT, LU, LV, MA, OA, RU, SU, WO, MC, MD, MY, NL, NO, NZ, PH, PL, PT, RO, RS, SE, SG, SI, SK, TH, TN, TR, TW, UA, VN); FPRS; EPO; JPO; DERWENT; IBM_TDB)	OR	ON	ON	2023/12/13 09:15 PM
L49	4264	b60w2400/00.cpc.	(US-PGPUB; USPAT; USOCR; FIT (AU, AP, AT, BE, BG, BR, BY, CA, CH, CN, CS, CU, CZ, DD, DE, DK, EA, EE, EP, ES, FI, FR, GB, HR, HU, ID, IE, IL, IS, IT, JP, KR, LT, LU, LV, MA, OA, RU, SU, WO, MC, MD, MY, NL, NO, NZ, PH, PL, PT, RO, RS, SE, SG, SI, SK, TH, TN, TR, TW, UA, VN); FPRS; EPO; JPO; DERWENT; IBM_TDB)	OR	ON	ON	2023/12/13 09:16 PM
L50	24	49 AND (((forward front$4 drive) WITH (revers$3 back$4) WITH (shift$3 chang$3 auto$shift$3 offer$3 suggest$3)) WITH ((steer$3 near2 angle) OR (park$3 near4 (tim$3 distance velocity speed)) OR ((location position$3) near2 vehicle)))	(US-PGPUB; USPAT; USOCR; FIT (AP, AT, AU, BE, BG, BR, BY, CA, CH, CN, CS, CU, CZ, DD, DE, DK, EA, EE, EP, ES, FI, FR, GB, HR, HU, ID, IE, IL, IS, IT, JP, KR, LT, LU, LV, MA, MC, MD, MY, NL, NO, NZ, OA, PH, PL, PT, RO, RS, RU, SE, SG, SI, SK, SU, TH, TN, TR, TW, UA, VN, WO); FPRS; EPO; JPO; DERWENT; IBM_TDB)	OR	ON	ON	2023/12/13 09:16 PM
L51	8	50 NOT 48	(US-PGPUB; USPAT; USOCR; FIT (AU, AP,	OR	ON	ON	2023/12/13 09:16 PM

			AT, BE, BG, BR, BY, CA, CH, CN, CS, CU, CZ, DD, DE, DK, EA, EE, EP, ES, FI, FR, GB, HR, HU, ID, IE, IL, IS, IT, JP, KR, LT, LU, LV, MA, OA, RU, SU, WO, MC, MD, MY, NL, NO, NZ, PH, PL, PT, RO, RS, SE, SG, SI, SK, TH, TN, TR, TW, UA, VN); FPRS; EPO; JPO; DERWENT; IBM_TDB)				
L52	1208	48 50	(US-PGPUB; USPAT; USOCR; FIT (AU, AP, AT, BE, BG, BR, BY, CA, CH, CN, CS, CU, CZ, DD, DE, DK, EA, EE, EP, ES, FI, FR, GB, HR, HU, ID, IE, IL, IS, IT, JP, KR, LT, LU, LV, MA, OA, RU, SU, WO, MC, MD, MY, NL, NO, NZ, PH, PL, PT, RO, RS, SE, SG, SI, SK, TH, TN, TR, TW, UA, VN); FPRS; EPO; JPO; DERWENT; IBM_TDB)	OR	ON	ON	2023/12/13 09:16 PM
L53	48267	b60w2420/42.cpc.	(US-PGPUB; USPAT; USOCR; FIT (AU, AP, AT, BE, BG, BR, BY, CA, CH, CN, CS, CU, CZ, DD, DE, DK, EA, EE, EP, ES, FI, FR, GB, HR, HU, ID, IE, IL, IS, IT, JP, KR, LT, LU, LV, MA, OA, RU, SU, WO, MC, MD, MY, NL, NO, NZ, PH, PL, PT, RO, RS, SE, SG, SI, SK, TH, TN, TR, TW, UA, VN); FPRS; EPO; JPO; DERWENT; IBM_TDB)	OR	ON	ON	2023/12/13 09:17 PM
L54	227	53 AND (((forward front$4 drive) WITH (revers$3 back$4) WITH (shift$3 chang$3 auto$shift$3 offer$3 suggest$3)) WITH ((steer$3 near2 angle) OR (park$3 near4 (tim$3 distance velocity speed)) OR ((location position$3) near2	(US-PGPUB; USPAT; USOCR; FIT (AP, AT, AU, BE, BG, BR, BY, CA, CH, CN, CS, CU, CZ, DD, DE, DK, EA, EE, EP, ES, FI, FR, GB, HR, HU, ID, IE, IL, IS, IT, JP, KR, LT, LU, LV, MA, MC, MD, MY, NL, NO, NZ, OA, PH, PL, PT, RO, RS, RU, SE,	OR	ON	ON	2023/12/13 09:17 PM

		vehicle)))	SG, SI, SK, SU, TH, TN, TR, TW, UA, VN, WO); FPRS; EPO; JPO; DERWENT; IBM_TDB)				
L55	125	54 NOT 52	(US-PGPUB; USPAT; USOCR; FIT (AU, AP, AT, BE, BG, BR, BY, CA, CH, CN, CS, CU, CZ, DD, DE, DK, EA, EE, EP, ES, FI, FR, GB, HR, HU, ID, IE, IL, IS, IT, JP, KR, LT, LU, LV, MA, OA, RU, SU, WO, MC, MD, MY, NL, NO, NZ, PH, PL, PT, RO, RS, SE, SG, SI, SK, TH, TN, TR, TW, UA, VN); FPRS; EPO; JPO; DERWENT; IBM_TDB)	OR	ON	ON	2023/12/13 09:17 PM
L56	1333	52 54	(US-PGPUB; USPAT; USOCR; FIT (AU, AP, AT, BE, BG, BR, BY, CA, CH, CN, CS, CU, CZ, DD, DE, DK, EA, EE, EP, ES, FI, FR, GB, HR, HU, ID, IE, IL, IS, IT, JP, KR, LT, LU, LV, MA, OA, RU, SU, WO, MC, MD, MY, NL, NO, NZ, PH, PL, PT, RO, RS, SE, SG, SI, SK, TH, TN, TR, TW, UA, VN); FPRS; EPO; JPO; DERWENT; IBM_TDB)	OR	ON	ON	2023/12/13 09:23 PM
L57	207	b60w2510/109.cpc.	(US-PGPUB; USPAT; USOCR; FIT (AU, AP, AT, BE, BG, BR, BY, CA, CH, CN, CS, CU, CZ, DD, DE, DK, EA, EE, EP, ES, FI, FR, GB, HR, HU, ID, IE, IL, IS, IT, JP, KR, LT, LU, LV, MA, OA, RU, SU, WO, MC, MD, MY, NL, NO, NZ, PH, PL, PT, RO, RS, SE, SG, SI, SK, TH, TN, TR, TW, UA, VN); FPRS; EPO; JPO; DERWENT; IBM_TDB)	OR	ON	ON	2023/12/13 09:23 PM
L58	5	57 AND (((forward front$4 drive) WITH (revers$3 back$4)	(US-PGPUB; USPAT; USOCR; FIT (AP, AT, AU, BE, BG, BR, BY,	OR	ON	ON	2023/12/13 09:23 PM

		WITH (shift$3 chang$3 auto$shift$3 offer$3 suggest$3)) WITH ((steer$3 near2 angle) OR (park$3 near4 (tim$3 distance velocity speed)) OR ((location position$3) near2 vehicle)))	CA, CH, CN, CS, CU, CZ, DD, DE, DK, EA, EE, EP, ES, FI, FR, GB, HR, HU, ID, IE, IL, IS, IT, JP, KR, LT, LU, LV, MA, MC, MD, MY, NL, NO, NZ, OA, PH, PL, PT, RO, RS, RU, SE, SG, SI, SK, SU, TH, TN, TR, TW, UA, VN, WO); FPRS; EPO; JPO; DERWENT; IBM_TDB)				
L59	3	58 NOT 56	(US-PGPUB; USPAT; USOCR; FIT (AU, AP, AT, BE, BG, BR, BY, CA, CH, CN, CS, CU, CZ, DD, DE, DK, EA, EE, EP, ES, FI, FR, GB, HR, HU, ID, IE, IL, IS, IT, JP, KR, LT, LU, LV, MA, OA, RU, SU, WO, MC, MD, MY, NL, NO, NZ, PH, PL, PT, RO, RS, SE, SG, SI, SK, TH, TN, TR, TW, UA, VN); FPRS; EPO; JPO; DERWENT; IBM_TDB)	OR	ON	ON	2023/12/13 09:23 PM
L60	1336	56 58	(US-PGPUB; USPAT; USOCR; FIT (AU, AP, AT, BE, BG, BR, BY, CA, CH, CN, CS, CU, CZ, DD, DE, DK, EA, EE, EP, ES, FI, FR, GB, HR, HU, ID, IE, IL, IS, IT, JP, KR, LT, LU, LV, MA, OA, RU, SU, WO, MC, MD, MY, NL, NO, NZ, PH, PL, PT, RO, RS, SE, SG, SI, SK, TH, TN, TR, TW, UA, VN); FPRS; EPO; JPO; DERWENT; IBM_TDB)	OR	ON	ON	2023/12/13 09:28 PM
L61	6096	b60w2510/20.cpc.	(US-PGPUB; USPAT; USOCR; FIT (AU, AP, AT, BE, BG, BR, BY, CA, CH, CN, CS, CU, CZ, DD, DE, DK, EA, EE, EP, ES, FI, FR, GB, HR, HU, ID, IE, IL, IS, IT, JP, KR, LT, LU, LV, MA, OA, RU, SU, WO, MC, MD, MY, NL, NO, NZ, PH, PL, PT, RO, RS, SE, SG, SI, SK,	OR	ON	ON	2023/12/13 09:28 PM

			TH, TN, TR, TW, UA, VN); FPRS; EPO; JPO; DERWENT; IBM_TDB)				
L62	53	61 AND (((forward front$4 drive) WITH (revers$3 back$4) WITH (shift$3 chang$3 auto$shift$3 offer$3 suggest$3)) WITH ((steer$3 near2 angle) OR (park$3 near4 (tim$3 distance velocity speed)) OR ((location position$3) near2 vehicle)))	(US-PGPUB; USPAT; USOCR; FIT (AP, AT, AU, BE, BG, BR, BY, CA, CH, CN, CS, CU, CZ, DD, DE, DK, EA, EE, EP, ES, FI, FR, GB, HR, HU, ID, IE, IL, IS, IT, JP, KR, LT, LU, LV, MA, MC, MD, MY, NL, NO, NZ, OA, PH, PL, PT, RO, RS, RU, SE, SG, SI, SK, SU, TH, TN, TR, TW, UA, VN, WO); FPRS; EPO; JPO; DERWENT; IBM_TDB)	OR	ON	ON	2023/12/13 09:28 PM
L63	13	62 NOT 60	(US-PGPUB; USPAT; USOCR; FIT (AU, AP, AT, BE, BG, BR, BY, CA, CH, CN, CS, CU, CZ, DD, DE, DK, EA, EE, EP, ES, FI, FR, GB, HR, HU, ID, IE, IL, IS, IT, JP, KR, LT, LU, LV, MA, OA, RU, SU, WO, MC, MD, MY, NL, NO, NZ, PH, PL, PT, RO, RS, SE, SG, SI, SK, TH, TN, TR, TW, UA, VN); FPRS; EPO; JPO; DERWENT; IBM_TDB)	OR	ON	ON	2023/12/13 09:28 PM
L64	1349	60 62	(US-PGPUB; USPAT; USOCR; FIT (AU, AP, AT, BE, BG, BR, BY, CA, CH, CN, CS, CU, CZ, DD, DE, DK, EA, EE, EP, ES, FI, FR, GB, HR, HU, ID, IE, IL, IS, IT, JP, KR, LT, LU, LV, MA, OA, RU, SU, WO, MC, MD, MY, NL, NO, NZ, PH, PL, PT, RO, RS, SE, SG, SI, SK, TH, TN, TR, TW, UA, VN); FPRS; EPO; JPO; DERWENT; IBM_TDB)	OR	ON	ON	2023/12/13 10:35 PM
L65	5255	b60w2520/04.cpc.	(US-PGPUB; USPAT; USOCR; FIT (AU, AP, AT, BE, BG, BR, BY, CA, CH, CN, CS, CU,	OR	ON	ON	2023/12/13 10:36 PM

			CZ, DD, DE, DK, EA, EE, EP, ES, FI, FR, GB, HR, HU, ID, IE, IL, IS, IT, JP, KR, LT, LU, LV, MA, OA, RU, SU, WO, MC, MD, MY, NL, NO, NZ, PH, PL, PT, RO, RS, SE, SG, SI, SK, TH, TN, TR, TW, UA, VN); FPRS; EPO; JPO; DERWENT; IBM_TDB)				
L66	53	65 AND (((forward front$4 drive) WITH (revers$3 back$4) WITH (shift$3 chang$3 auto$shift$3 offer$3 suggest$3)) WITH ((steer$3 near2 angle) OR (park$3 near4 (tim$3 distance velocity speed)) OR ((location position$3) near2 vehicle)))	(US-PGPUB; USPAT; USOCR; FIT (AP, AT, AU, BE, BG, BR, BY, CA, CH, CN, CS, CU, CZ, DD, DE, DK, EA, EE, EP, ES, FI, FR, GB, HR, HU, ID, IE, IL, IS, IT, JP, KR, LT, LU, LV, MA, MC, MD, MY, NL, NO, NZ, OA, PH, PL, PT, RO, RS, RU, SE, SG, SI, SK, SU, TH, TN, TR, TW, UA, VN, WO); FPRS; EPO; JPO; DERWENT; IBM_TDB)	OR	ON	ON	2023/12/13 10:36 PM
L67	11	66 NOT 64	(US-PGPUB; USPAT; USOCR; FIT (AU, AP, AT, BE, BG, BR, BY, CA, CH, CN, CS, CU, CZ, DD, DE, DK, EA, EE, EP, ES, FI, FR, GB, HR, HU, ID, IE, IL, IS, IT, JP, KR, LT, LU, LV, MA, OA, RU, SU, WO, MC, MD, MY, NL, NO, NZ, PH, PL, PT, RO, RS, SE, SG, SI, SK, TH, TN, TR, TW, UA, VN); FPRS; EPO; JPO; DERWENT; IBM_TDB)	OR	ON	ON	2023/12/13 10:36 PM
L68	1360	64 66	(US-PGPUB; USPAT; USOCR; FIT (AU, AP, AT, BE, BG, BR, BY, CA, CH, CN, CS, CU, CZ, DD, DE, DK, EA, EE, EP, ES, FI, FR, GB, HR, HU, ID, IE, IL, IS, IT, JP, KR, LT, LU, LV, MA, OA, RU, SU, WO, MC, MD, MY, NL, NO, NZ, PH, PL, PT, RO, RS, SE, SG, SI, SK, TH, TN, TR, TW, UA,	OR	ON	ON	2023/12/13 10:41 PM

			VN); FPRS; EPO; JPO; DERWENT; IBM_TDB)				
L69	7352	b60w2520/06.cpc.	(US-PGPUB; USPAT; USOCR; FIT (AU, AP, AT, BE, BG, BR, BY, CA, CH, CN, CS, CU, CZ, DD, DE, DK, EA, EE, EP, ES, FI, FR, GB, HR, HU, ID, IE, IL, IS, IT, JP, KR, LT, LU, LV, MA, OA, RU, SU, WO, MC, MD, MY, NL, NO, NZ, PH, PL, PT, RO, RS, SE, SG, SI, SK, TH, TN, TR, TW, UA, VN); FPRS; EPO; JPO; DERWENT; IBM_TDB)	OR	ON	ON	2023/12/13 10:42 PM
L70	146	69 AND (((forward front$4 drive) WITH (revers$3 back$4) WITH (shift$3 chang$3 auto$shift$3 offer$3 suggest$3)) WITH ((steer$3 near2 angle) OR (park$3 near4 (tim$3 distance velocity speed)) OR ((location position$3) near2 vehicle)))	(US-PGPUB; USPAT; USOCR; FIT (AP, AT, AU, BE, BG, BR, BY, CA, CH, CN, CS, CU, CZ, DD, DE, DK, EA, EE, EP, ES, FI, FR, GB, HR, HU, ID, IE, IL, IS, IT, JP, KR, LT, LU, LV, MA, MC, MD, MY, NL, NO, NZ, OA, PH, PL, PT, RO, RS, RU, SE, SG, SI, SK, SU, TH, TN, TR, TW, UA, VN, WO); FPRS; EPO; JPO; DERWENT; IBM_TDB)	OR	ON	ON	2023/12/13 10:42 PM
L71	60	70 NOT 68	(US-PGPUB; USPAT; USOCR; FIT (AU, AP, AT, BE, BG, BR, BY, CA, CH, CN, CS, CU, CZ, DD, DE, DK, EA, EE, EP, ES, FI, FR, GB, HR, HU, ID, IE, IL, IS, IT, JP, KR, LT, LU, LV, MA, OA, RU, SU, WO, MC, MD, MY, NL, NO, NZ, PH, PL, PT, RO, RS, SE, SG, SI, SK, TH, TN, TR, TW, UA, VN); FPRS; EPO; JPO; DERWENT; IBM_TDB)	OR	ON	ON	2023/12/13 10:42 PM
L72	1420	68 70	(US-PGPUB; USPAT; USOCR; FIT (AU, AP, AT, BE, BG, BR, BY, CA, CH, CN, CS, CU, CZ, DD, DE, DK, EA,	OR	ON	ON	2023/12/13 11:06 PM

			EE, EP, ES, FI, FR, GB, HR, HU, ID, IE, IL, IS, IT, JP, KR, LT, LU, LV, MA, OA, RU, SU, WO, MC, MD, MY, NL, NO, NZ, PH, PL, PT, RO, RS, SE, SG, SI, SK, TH, TN, TR, TW, UA, VN); FPRS; EPO; JPO; DERWENT; IBM_TDB)				
L73	82394	b60w2520/10.cpc.	(US-PGPUB; USPAT; USOCR; FIT (AU, AP, AT, BE, BG, BR, BY, CA, CH, CN, CS, CU, CZ, DD, DE, DK, EA, EE, EP, ES, FI, FR, GB, HR, HU, ID, IE, IL, IS, IT, JP, KR, LT, LU, LV, MA, OA, RU, SU, WO, MC, MD, MY, NL, NO, NZ, PH, PL, PT, RO, RS, SE, SG, SI, SK, TH, TN, TR, TW, UA, VN); FPRS; EPO; JPO; DERWENT; IBM_TDB)	OR	ON	ON	2023/12/13 11:07 PM
L74	520	73 AND (((forward front$4 drive) WITH (revers$3 back$4) WITH (shift$3 chang$3 auto$shift$3 offer$3 suggest$3)) WITH ((steer$3 near2 angle) OR (park$3 near4 (tim$3 distance velocity speed)) OR ((location position$3) near2 vehicle)))	(US-PGPUB; USPAT; USOCR; FIT (AP, AT, AU, BE, BG, BR, BY, CA, CH, CN, CS, CU, CZ, DD, DE, DK, EA, EE, EP, ES, FI, FR, GB, HR, HU, ID, IE, IL, IS, IT, JP, KR, LT, LU, LV, MA, MC, MD, MY, NL, NO, NZ, OA, PH, PL, PT, RO, RS, RU, SE, SG, SI, SK, SU, TH, TN, TR, TW, UA, VN, WO); FPRS; EPO; JPO; DERWENT; IBM_TDB)	OR	ON	ON	2023/12/13 11:07 PM
L75	181	74 NOT 72	(US-PGPUB; USPAT; USOCR; FIT (AU, AP, AT, BE, BG, BR, BY, CA, CH, CN, CS, CU, CZ, DD, DE, DK, EA, EE, EP, ES, FI, FR, GB, HR, HU, ID, IE, IL, IS, IT, JP, KR, LT, LU, LV, MA, OA, RU, SU, WO, MC, MD, MY, NL, NO, NZ, PH, PL, PT, RO, RS, SE, SG, SI, SK, TH, TN, TR, TW, UA, VN); FPRS; EPO;	OR	ON	ON	2023/12/13 11:07 PM

			JPO; DERWENT; IBM_TDB)				
L76	1601	72 74	(US-PGPUB; USPAT; USOCR; FIT (AU, AP, AT, BE, BG, BR, BY, CA, CH, CN, CS, CU, CZ, DD, DE, DK, EA, EE, EP, ES, FI, FR, GB, HR, HU, ID, IE, IL, IS, IT, JP, KR, LT, LU, LV, MA, OA, RU, SU, WO, MC, MD, MY, NL, NO, NZ, PH, PL, PT, RO, RS, SE, SG, SI, SK, TH, TN, TR, TW, UA, VN); FPRS; EPO; JPO; DERWENT; IBM_TDB)	OR	ON	ON	2023/12/13 11:20 PM
L77	135	b60w2710/1094.cpc.	(US-PGPUB; USPAT; USOCR; FIT (AU, AP, AT, BE, BG, BR, BY, CA, CH, CN, CS, CU, CZ, DD, DE, DK, EA, EE, EP, ES, FI, FR, GB, HR, HU, ID, IE, IL, IS, IT, JP, KR, LT, LU, LV, MA, OA, RU, SU, WO, MC, MD, MY, NL, NO, NZ, PH, PL, PT, RO, RS, SE, SG, SI, SK, TH, TN, TR, TW, UA, VN); FPRS; EPO; JPO; DERWENT; IBM_TDB)	OR	ON	ON	2023/12/13 11:21 PM
L78	4	77 AND (((forward front$4 drive) WITH (revers$3 back$4) WITH (shift$3 chang$3 auto$shift$3 offer$3 suggest$3)) WITH ((steer$3 near2 angle) OR (park$3 near4 (tim$3 distance velocity speed)) OR ((location position$3) near2 vehicle)))	(US-PGPUB; USPAT; USOCR; FIT (AP, AT, AU, BE, BG, BR, BY, CA, CH, CN, CS, CU, CZ, DD, DE, DK, EA, EE, EP, ES, FI, FR, GB, HR, HU, ID, IE, IL, IS, IT, JP, KR, LT, LU, LV, MA, MC, MD, MY, NL, NO, NZ, OA, PH, PL, PT, RO, RS, RU, SE, SG, SI, SK, SU, TH, TN, TR, TW, UA, VN, WO); FPRS; EPO; JPO; DERWENT; IBM_TDB)	OR	ON	ON	2023/12/13 11:21 PM
L79	1603	76 78	(US-PGPUB; USPAT; USOCR; FIT (AU, AP, AT, BE, BG, BR, BY, CA, CH, CN, CS, CU, CZ, DD, DE, DK, EA, EE, EP, ES, FI, FR, GB,	OR	ON	ON	2023/12/13 11:22 PM

			HR, HU, ID, IE, IL, IS, IT, JP, KR, LT, LU, LV, MA, OA, RU, SU, WO, MC, MD, MY, NL, NO, NZ, PH, PL, PT, RO, RS, SE, SG, SI, SK, TH, TN, TR, TW, UA, VN); FPRS; EPO; JPO; DERWENT; IBM_TDB)				
L80	4446	b60w2710/207.cpc.	(US-PGPUB; USPAT; USOCR; FIT (AU, AP, AT, BE, BG, BR, BY, CA, CH, CN, CS, CU, CZ, DD, DE, DK, EA, EE, EP, ES, FI, FR, GB, HR, HU, ID, IE, IL, IS, IT, JP, KR, LT, LU, LV, MA, OA, RU, SU, WO, MC, MD, MY, NL, NO, NZ, PH, PL, PT, RO, RS, SE, SG, SI, SK, TH, TN, TR, TW, UA, VN); FPRS; EPO; JPO; DERWENT; IBM_TDB)	OR	ON	ON	2023/12/13 11:22 PM
L81	76	80 AND (((forward front$4 drive) WITH (revers$3 back$4) WITH (shift$3 chang$3 auto$shift$3 offer$3 suggest$3)) WITH ((steer$3 near2 angle) OR (park$3 near4 (tim$3 distance velocity speed)) OR ((location position$3) near2 vehicle)))	(US-PGPUB; USPAT; USOCR; FIT (AP, AT, AU, BE, BG, BR, BY, CA, CH, CN, CS, CU, CZ, DD, DE, DK, EA, EE, EP, ES, FI, FR, GB, HR, HU, ID, IE, IL, IS, IT, JP, KR, LT, LU, LV, MA, MC, MD, MY, NL, NO, NZ, OA, PH, PL, PT, RO, RS, RU, SE, SG, SI, SK, SU, TH, TN, TR, TW, UA, VN, WO); FPRS; EPO; JPO; DERWENT; IBM_TDB)	OR	ON	ON	2023/12/13 11:22 PM
L82	5	81 NOT 79	(US-PGPUB; USPAT; USOCR; FIT (AU, AP, AT, BE, BG, BR, BY, CA, CH, CN, CS, CU, CZ, DD, DE, DK, EA, EE, EP, ES, FI, FR, GB, HR, HU, ID, IE, IL, IS, IT, JP, KR, LT, LU, LV, MA, OA, RU, SU, WO, MC, MD, MY, NL, NO, NZ, PH, PL, PT, RO, RS, SE, SG, SI, SK, TH, TN, TR, TW, UA, VN); FPRS; EPO; JPO; DERWENT;	OR	ON	ON	2023/12/13 11:22 PM

			IBM_TDB)				
L83	1608	79 81	(US-PGPUB; USPAT; USOCR; FIT (AU, AP, AT, BE, BG, BR, BY, CA, CH, CN, CS, CU, CZ, DD, DE, DK, EA, EE, EP, ES, FI, FR, GB, HR, HU, ID, IE, IL, IS, IT, JP, KR, LT, LU, LV, MA, OA, RU, SU, WO, MC, MD, MY, NL, NO, NZ, PH, PL, PT, RO, RS, SE, SG, SI, SK, TH, TN, TR, TW, UA, VN); FPRS; EPO; JPO; DERWENT; IBM_TDB)	OR	ON	ON	2023/12/13 11:37 PM
L84	2779	b60w2720/24.cpc.	(US-PGPUB; USPAT; USOCR; FIT (AU, AP, AT, BE, BG, BR, BY, CA, CH, CN, CS, CU, CZ, DD, DE, DK, EA, EE, EP, ES, FI, FR, GB, HR, HU, ID, IE, IL, IS, IT, JP, KR, LT, LU, LV, MA, OA, RU, SU, WO, MC, MD, MY, NL, NO, NZ, PH, PL, PT, RO, RS, SE, SG, SI, SK, TH, TN, TR, TW, UA, VN); FPRS; EPO; JPO; DERWENT; IBM_TDB)	OR	ON	ON	2023/12/13 11:37 PM
L85	17	84 AND (((forward front$4 drive) WITH (revers$3 back$4) WITH (shift$3 chang$3 auto$shift$3 offer$3 suggest$3)) WITH ((steer$3 near2 angle) OR (park$3 near4 (tim$3 distance velocity speed)) OR ((location position$3) near2 vehicle)))	(US-PGPUB; USPAT; USOCR; FIT (AP, AT, AU, BE, BG, BR, BY, CA, CH, CN, CS, CU, CZ, DD, DE, DK, EA, EE, EP, ES, FI, FR, GB, HR, HU, ID, IE, IL, IS, IT, JP, KR, LT, LU, LV, MA, MC, MD, MY, NL, NO, NZ, OA, PH, PL, PT, RO, RS, RU, SE, SG, SI, SK, SU, TH, TN, TR, TW, UA, VN, WO); FPRS; EPO; JPO; DERWENT; IBM_TDB)	OR	ON	ON	2023/12/13 11:37 PM
L86	1	85 NOT 83	(US-PGPUB; USPAT; USOCR; FIT (AU, AP, AT, BE, BG, BR, BY, CA, CH, CN, CS, CU, CZ, DD, DE, DK, EA, EE, EP, ES, FI, FR, GB, HR, HU, ID, IE, IL, IS,	OR	ON	ON	2023/12/13 11:38 PM

			IT, JP, KR, LT, LU, LV, MA, OA, RU, SU, WO, MC, MD, MY, NL, NO, NZ, PH, PL, PT, RO, RS, SE, SG, SI, SK, TH, TN, TR, TW, UA, VN); FPRS; EPO; JPO; DERWENT; IBM_TDB)				
L88	1609	83 85	(US-PGPUB; USPAT; USOCR; FIT (AU, AP, AT, BE, BG, BR, BY, CA, CH, CN, CS, CU, CZ, DD, DE, DK, EA, EE, EP, ES, FI, FR, GB, HR, HU, ID, IE, IL, IS, IT, JP, KR, LT, LU, LV, MA, OA, RU, SU, WO, MC, MD, MY, NL, NO, NZ, PH, PL, PT, RO, RS, SE, SG, SI, SK, TH, TN, TR, TW, UA, VN); FPRS; EPO; JPO; DERWENT; IBM_TDB)	OR	ON	ON	2023/12/13 11:38 PM
L89	20153	(((forward front$4 drive) WITH (revers$3 back$4) WITH (shift$3 chang$3 auto$shift$3 offer$3 suggest$3)) WITH ((steer$3 near2 angle) OR (park$3 near4 (tim$3 distance velocity speed)) OR ((location position$3) near2 vehicle)))	(US-PGPUB; USPAT; USOCR; FIT (AP, AT, AU, BE, BG, BR, BY, CA, CH, CN, CS, CU, CZ, DD, DE, DK, EA, EE, EP, ES, FI, FR, GB, HR, HU, ID, IE, IL, IS, IT, JP, KR, LT, LU, LV, MA, MC, MD, MY, NL, NO, NZ, OA, PH, PL, PT, RO, RS, RU, SE, SG, SI, SK, SU, TH, TN, TR, TW, UA, VN, WO); FPRS; EPO; JPO; DERWENT; IBM_TDB)	OR	ON	ON	2023/12/13 11:38 PM
L90	1634	(((forward front$4 drive) near4 (revers$3 back$4) near4 (shift$3 chang$3 auto$shift$3 offer$3 suggest$3)) near4 ((steer$3 near2 angle) OR (park$3 near4 (tim$3 distance velocity speed)) OR ((location position$3) near2 vehicle)))	(US-PGPUB; USPAT; USOCR; FIT (AP, AT, AU, BE, BG, BR, BY, CA, CH, CN, CS, CU, CZ, DD, DE, DK, EA, EE, EP, ES, FI, FR, GB, HR, HU, ID, IE, IL, IS, IT, JP, KR, LT, LU, LV, MA, MC, MD, MY, NL, NO, NZ, OA, PH, PL, PT, RO, RS, RU, SE, SG, SI, SK, SU, TH, TN, TR, TW, UA, VN, WO); FPRS; EPO; JPO; DERWENT; IBM_TDB)	OR	ON	ON	2023/12/13 11:39 PM

L91	1450	90 NOT 88	(US-PGPUB; USPAT; USOCR; FIT (AU, AP, AT, BE, BG, BR, BY, CA, CH, CN, CS, CU, CZ, DD, DE, DK, EA, EE, EP, ES, FI, FR, GB, HR, HU, ID, IE, IL, IS, IT, JP, KR, LT, LU, LV, MA, OA, RU, SU, WO, MC, MD, MY, NL, NO, NZ, PH, PL, PT, RO, RS, SE, SG, SI, SK, TH, TN, TR, TW, UA, VN); FPRS; EPO; JPO; DERWENT; IBM_TDB)	OR	ON	ON	2023/12/13 11:39 PM
L92	1399	91 AND (vehicle automobile automotive car truck suv)	(US-PGPUB; USPAT; USOCR; FIT (AU, AP, AT, BE, BG, BR, BY, CA, CH, CN, CS, CU, CZ, DD, DE, DK, EA, EE, EP, ES, FI, FR, GB, HR, HU, ID, IE, IL, IS, IT, JP, KR, LT, LU, LV, MA, OA, RU, SU, WO, MC, MD, MY, NL, NO, NZ, PH, PL, PT, RO, RS, SE, SG, SI, SK, TH, TN, TR, TW, UA, VN); FPRS; EPO; JPO; DERWENT; IBM_TDB)	OR	ON	ON	2023/12/13 11:39 PM
L93	3008	88 92	(US-PGPUB; USPAT; USOCR; FIT (AU, AP, AT, BE, BG, BR, BY, CA, CH, CN, CS, CU, CZ, DD, DE, DK, EA, EE, EP, ES, FI, FR, GB, HR, HU, ID, IE, IL, IS, IT, JP, KR, LT, LU, LV, MA, OA, RU, SU, WO, MC, MD, MY, NL, NO, NZ, PH, PL, PT, RO, RS, SE, SG, SI, SK, TH, TN, TR, TW, UA, VN); FPRS; EPO; JPO; DERWENT; IBM_TDB)	OR	ON	ON	2023/12/14 12:53 PM
L94	9	("2021/0300349" | "2020/0404192" | "2016/0075329").urpn. AND (PGPB | USPT | USOC).dbnm.	(US-PGPUB; USPAT; USOCR)	OR	ON	ON	2023/12/14 12:53 PM
L95	0	93 AND @pd>"20231213"	(US-PGPUB; USPAT; USOCR; FIT (AU, AP, AT, BE, BG, BR, BY,	OR	ON	ON	2023/12/20 02:07 PM

			CA, CH, CN, CS, CU, CZ, DD, DE, DK, EA, EE, EP, ES, FI, FR, GB, HR, HU, ID, IE, IL, IS, IT, JP, KR, LT, LU, LV, MA, OA, RU, SU, WO, MC, MD, MY, NL, NO, NZ, PH, PL, PT, RO, RS, SE, SG, SI, SK, TH, TN, TR, TW, UA, VN); FPRS; EPO; JPO; DERWENT; IBM_TDB)				
L96	2	"11932230".pn.	(US-PGPUB; USPAT; USOCR; FIT (AU, AP, AT, BE, BG, BR, BY, CA, CH, CN, CS, CU, CZ, DD, DE, DK, EA, EE, EP, ES, FI, FR, GB, HR, HU, ID, IE, IL, IS, IT, JP, KR, LT, LU, LV, MA, OA, RU, SU, WO, MC, MD, MY, NL, NO, NZ, PH, PL, PT, RO, RS, SE, SG, SI, SK, TH, TN, TR, TW, UA, VN); FPRS; EPO; JPO; DERWENT; IBM_TDB)	OR	ON	ON	2024/11/26 04:15 PM
L97	4	("20110080305" OR "20130144492" OR "20200207334" OR "20210269019").pn.	(US-PGPUB; USPAT)	OR	ON	ON	2024/11/26 04:57 PM
L98	3347	((drive forward) WITH revers$3 WITH shift WITH ((driver user operator) near4 (select$3 choos$3 choice activat$3)))	(US-PGPUB; USPAT; USOCR; FIT (AU, AP, AT, BE, BG, BR, BY, CA, CH, CN, CS, CU, CZ, DD, DE, DK, EA, EE, EP, ES, FI, FR, GB, HR, HU, ID, IE, IL, IS, IT, JP, KR, LT, LU, LV, MA, OA, RU, SU, WO, MC, MD, MY, NL, NO, NZ, PH, PL, PT, RO, RS, SE, SG, SI, SK, TH, TN, TR, TW, UA, VN); FPRS; EPO; JPO; DERWENT; IBM_TDB)	OR	ON	ON	2024/11/26 05:22 PM
L99	3840	((drive forward) WITH revers$3 WITH shift$3 WITH ((driver user operator) near4 (select$3 choos$3 choice activat$3)))	(US-PGPUB; USPAT; USOCR; FIT (AU, AP, AT, BE, BG, BR, BY, CA, CH, CN, CS, CU, CZ, DD, DE, DK, EA, EE, EP, ES, FI, FR, GB, HR, HU, ID, IE, IL, IS,	OR	ON	ON	2024/11/26 05:23 PM

			IT, JP, KR, LT, LU, LV, MA, OA, RU, SU, WO, MC, MD, MY, NL, NO, NZ, PH, PL, PT, RO, RS, SE, SG, SI, SK, TH, TN, TR, TW, UA, VN); FPRS; EPO; JPO; DERWENT; IBM_TDB)				
L100	3911	((drive forward) WITH revers$3 WITH shift$3 WITH ((driver user operator) near4 (select$3 choos$3 choice activat$3 confirm$3)))	(US-PGPUB; USPAT; USOCR; FIT (AU, AP, AT, BE, BG, BR, BY, CA, CH, CN, CS, CU, CZ, DD, DE, DK, EA, EE, EP, ES, FI, FR, GB, HR, HU, ID, IE, IL, IS, IT, JP, KR, LT, LU, LV, MA, OA, RU, SU, WO, MC, MD, MY, NL, NO, NZ, PH, PL, PT, RO, RS, SE, SG, SI, SK, TH, TN, TR, TW, UA, VN); FPRS; EPO; JPO; DERWENT; IBM_TDB)	OR	ON	ON	2024/11/26 05:23 PM
L101	2773	(((drive forward) near4 revers$3) WITH shift$3 WITH ((driver user operator) near4 (select$3 choos$3 choice activat$3 confirm$3)))	(US-PGPUB; USPAT; USOCR; FIT (AU, AP, AT, BE, BG, BR, BY, CA, CH, CN, CS, CU, CZ, DD, DE, DK, EA, EE, EP, ES, FI, FR, GB, HR, HU, ID, IE, IL, IS, IT, JP, KR, LT, LU, LV, MA, OA, RU, SU, WO, MC, MD, MY, NL, NO, NZ, PH, PL, PT, RO, RS, SE, SG, SI, SK, TH, TN, TR, TW, UA, VN); FPRS; EPO; JPO; DERWENT; IBM_TDB)	OR	ON	ON	2024/11/26 05:24 PM
L102	569	(((drive forward) near4 revers$3) WITH (automatic$4 autonomous$2) WITH shift$3 WITH ((driver user operator) near4 (select$3 choos$3 choice activat$3 confirm$3)))	(US-PGPUB; USPAT; USOCR; FIT (AU, AP, AT, BE, BG, BR, BY, CA, CH, CN, CS, CU, CZ, DD, DE, DK, EA, EE, EP, ES, FI, FR, GB, HR, HU, ID, IE, IL, IS, IT, JP, KR, LT, LU, LV, MA, OA, RU, SU, WO, MC, MD, MY, NL, NO, NZ, PH, PL, PT, RO, RS, SE, SG, SI, SK, TH, TN, TR, TW, UA, VN); FPRS; EPO; JPO; DERWENT; IBM_TDB)	OR	ON	ON	2024/11/26 05:27 PM

L103	169	(((drive forward) near4 revers$3) WITH semi$2automatic$4 WITH shift$3 WITH ((driver user operator) near4 (select$3 choos$3 choice activat$3 confirm$3)))	(US-PGPUB; USPAT; USOCR; FIT (AU, AP, AT, BE, BG, BR, BY, CA, CH, CN, CS, CU, CZ, DD, DE, DK, EA, EE, EP, ES, FI, FR, GB, HR, HU, ID, IE, IL, IS, IT, JP, KR, LT, LU, LV, MA, OA, RU, SU, WO, MC, MD, MY, NL, NO, NZ, PH, PL, PT, RO, RS, SE, SG, SI, SK, TH, TN, TR, TW, UA, VN); FPRS; EPO; JPO; DERWENT; IBM_TDB)	OR	ON	ON	2024/11/26 08:19 PM
L104	0	103 NOT 102	(US-PGPUB; USPAT; USOCR; FIT (AU, AP, AT, BE, BG, BR, BY, CA, CH, CN, CS, CU, CZ, DD, DE, DK, EA, EE, EP, ES, FI, FR, GB, HR, HU, ID, IE, IL, IS, IT, JP, KR, LT, LU, LV, MA, OA, RU, SU, WO, MC, MD, MY, NL, NO, NZ, PH, PL, PT, RO, RS, SE, SG, SI, SK, TH, TN, TR, TW, UA, VN); FPRS; EPO; JPO; DERWENT; IBM_TDB)	OR	ON	ON	2024/11/26 08:19 PM
L105	183	(((drive forward) near4 revers$3) WITH semi$2automatic$4 WITH ((driver user operator) near4 (select$3 choos$3 choice activat$3 confirm$3)))	(US-PGPUB; USPAT; USOCR; FIT (AP, AT, AU, BE, BG, BR, BY, CA, CH, CN, CS, CU, CZ, DD, DE, DK, EA, EE, EP, ES, FI, FR, GB, HR, HU, ID, IE, IL, IS, IT, JP, KR, LT, LU, LV, MA, MC, MD, MY, NL, NO, NZ, OA, PH, PL, PT, RO, RS, RU, SE, SG, SI, SK, SU, TH, TN, TR, TW, UA, VN, WO); FPRS; EPO; JPO; DERWENT; IBM_TDB)	OR	ON	ON	2024/11/26 08:19 PM
L106	14	105 NOT 102	(US-PGPUB; USPAT; USOCR; FIT (AU, AP, AT, BE, BG, BR, BY, CA, CH, CN, CS, CU, CZ, DD, DE, DK, EA, EE, EP, ES, FI, FR, GB, HR, HU, ID, IE, IL, IS, IT, JP, KR, LT, LU, LV, MA, OA, RU, SU, WO,	OR	ON	ON	2024/11/26 08:19 PM

			MC, MD, MY, NL, NO, NZ, PH, PL, PT, RO, RS, SE, SG, SI, SK, TH, TN, TR, TW, UA, VN); FPRS; EPO; JPO; DERWENT; IBM_TDB)				
L107	583	102 105	(US-PGPUB; USPAT; USOCR; FIT (AU, AP, AT, BE, BG, BR, BY, CA, CH, CN, CS, CU, CZ, DD, DE, DK, EA, EE, EP, ES, FI, FR, GB, HR, HU, ID, IE, IL, IS, IT, JP, KR, LT, LU, LV, MA, OA, RU, SU, WO, MC, MD, MY, NL, NO, NZ, PH, PL, PT, RO, RS, SE, SG, SI, SK, TH, TN, TR, TW, UA, VN); FPRS; EPO; JPO; DERWENT; IBM_TDB)	OR	ON	ON	2024/11/26 08:35 PM
L108	2	(((drive forward) near4 revers$3) WITH auto$park$3 WITH ((driver user operator) near4 (select$3 choos$3 choice activat$3 confirm$3)))	(US-PGPUB; USPAT; USOCR; FIT (AP, AT, AU, BE, BG, BR, BY, CA, CH, CN, CS, CU, CZ, DD, DE, DK, EA, EE, EP, ES, FI, FR, GB, HR, HU, ID, IE, IL, IS, IT, JP, KR, LT, LU, LV, MA, MC, MD, MY, NL, NO, NZ, OA, PH, PL, PT, RO, RS, RU, SE, SG, SI, SK, SU, TH, TN, TR, TW, UA, VN, WO); FPRS; EPO; JPO; DERWENT; IBM_TDB)	OR	ON	ON	2024/11/26 08:41 PM
L109	585	107 108	(US-PGPUB; USPAT; USOCR; FIT (AU, AP, AT, BE, BG, BR, BY, CA, CH, CN, CS, CU, CZ, DD, DE, DK, EA, EE, EP, ES, FI, FR, GB, HR, HU, ID, IE, IL, IS, IT, JP, KR, LT, LU, LV, MA, OA, RU, SU, WO, MC, MD, MY, NL, NO, NZ, PH, PL, PT, RO, RS, SE, SG, SI, SK, TH, TN, TR, TW, UA, VN); FPRS; EPO; JPO; DERWENT; IBM_TDB)	OR	ON	ON	2024/11/26 08:41 PM
L110	2	(((drive forward) WITH	(US-PGPUB; USPAT;	OR	ON	ON	2024/11/26

		revers$3) WITH auto$park$3 WITH ((driver user operator) near4 (select$3 choos$3 choice activat$3 confirm$3)))	USOCR; FIT (AP, AT, AU, BE, BG, BR, BY, CA, CH, CN, CS, CU, CZ, DD, DE, DK, EA, EE, EP, ES, FI, FR, GB, HR, HU, ID, IE, IL, IS, IT, JP, KR, LT, LU, LV, MA, MC, MD, MY, NL, NO, NZ, OA, PH, PL, PT, RO, RS, RU, SE, SG, SI, SK, SU, TH, TN, TR, TW, UA, VN, WO); FPRS; EPO; JPO; DERWENT; IBM_TDB)				08:41 PM
L111	4	(((drive forward) WITH revers$3) WITH auto$park$3 WITH (select$3 choos$3 choice activat$3 confirm$3 prompt$3))	(US-PGPUB; USPAT; USOCR; FIT (AP, AT, AU, BE, BG, BR, BY, CA, CH, CN, CS, CU, CZ, DD, DE, DK, EA, EE, EP, ES, FI, FR, GB, HR, HU, ID, IE, IL, IS, IT, JP, KR, LT, LU, LV, MA, MC, MD, MY, NL, NO, NZ, OA, PH, PL, PT, RO, RS, RU, SE, SG, SI, SK, SU, TH, TN, TR, TW, UA, VN, WO); FPRS; EPO; JPO; DERWENT; IBM_TDB)	OR	ON	ON	2024/11/26 08:43 PM
L112	587	109 110 111	(US-PGPUB; USPAT; USOCR; FIT (AU, AP, AT, BE, BG, BR, BY, CA, CH, CN, CS, CU, CZ, DD, DE, DK, EA, EE, EP, ES, FI, FR, GB, HR, HU, ID, IE, IL, IS, IT, JP, KR, LT, LU, LV, MA, OA, RU, SU, WO, MC, MD, MY, NL, NO, NZ, PH, PL, PT, RO, RS, SE, SG, SI, SK, TH, TN, TR, TW, UA, VN); FPRS; EPO; JPO; DERWENT; IBM_TDB)	OR	ON	ON	2024/11/26 08:50 PM
L113	3450	tesla.asn.	(US-PGPUB; USPAT; USOCR; FIT (AU, AP, AT, BE, BG, BR, BY, CA, CH, CN, CS, CU, CZ, DD, DE, DK, EA, EE, EP, ES, FI, FR, GB, HR, HU, ID, IE, IL, IS, IT, JP, KR, LT, LU, LV, MA, OA, RU, SU, WO, MC, MD, MY, NL, NO,	OR	ON	ON	2024/11/26 08:55 PM

			NZ, PH, PL, PT, RO, RS, SE, SG, SI, SK, TH, TN, TR, TW, UA, VN); FPRS; EPO; JPO; DERWENT; IBM_TDB)				
L114	0	113 AND (auto$2shift$3)	(US-PGPUB; USPAT; USOCR; FIT (AU, AP, AT, BE, BG, BR, BY, CA, CH, CN, CS, CU, CZ, DD, DE, DK, EA, EE, EP, ES, FI, FR, GB, HR, HU, ID, IE, IL, IS, IT, JP, KR, LT, LU, LV, MA, OA, RU, SU, WO, MC, MD, MY, NL, NO, NZ, PH, PL, PT, RO, RS, SE, SG, SI, SK, TH, TN, TR, TW, UA, VN); FPRS; EPO; JPO; DERWENT; IBM_TDB)	OR	ON	ON	2024/11/26 08:56 PM
L115	276	113 AND (shift$3)	(US-PGPUB; USPAT; USOCR; FIT (AU, AP, AT, BE, BG, BR, BY, CA, CH, CN, CS, CU, CZ, DD, DE, DK, EA, EE, EP, ES, FI, FR, GB, HR, HU, ID, IE, IL, IS, IT, JP, KR, LT, LU, LV, MA, OA, RU, SU, WO, MC, MD, MY, NL, NO, NZ, PH, PL, PT, RO, RS, SE, SG, SI, SK, TH, TN, TR, TW, UA, VN); FPRS; EPO; JPO; DERWENT; IBM_TDB)	OR	ON	ON	2024/11/26 09:15 PM
L116	1	113 AND (shift$3 WITH forward WITH revers$3)	(US-PGPUB; USPAT; USOCR; FIT (AU, AP, AT, BE, BG, BR, BY, CA, CH, CN, CS, CU, CZ, DD, DE, DK, EA, EE, EP, ES, FI, FR, GB, HR, HU, ID, IE, IL, IS, IT, JP, KR, LT, LU, LV, MA, OA, RU, SU, WO, MC, MD, MY, NL, NO, NZ, PH, PL, PT, RO, RS, SE, SG, SI, SK, TH, TN, TR, TW, UA, VN); FPRS; EPO; JPO; DERWENT; IBM_TDB)	OR	ON	ON	2024/11/26 09:15 PM
L117	14	113 AND (forward WITH revers$3)	(US-PGPUB; USPAT; USOCR; FIT (AU, AP,	OR	ON	ON	2024/11/26 09:37 PM

			AT, BE, BG, BR, BY, CA, CH, CN, CS, CU, CZ, DD, DE, DK, EA, EE, EP, ES, FI, FR, GB, HR, HU, ID, IE, IL, IS, IT, JP, KR, LT, LU, LV, MA, OA, RU, SU, WO, MC, MD, MY, NL, NO, NZ, PH, PL, PT, RO, RS, SE, SG, SI, SK, TH, TN, TR, TW, UA, VN); FPRS; EPO; JPO; DERWENT; IBM_TDB)				
L118	871	112 115 116 117	(US-PGPUB; USPAT; USOCR; FIT (AU, AP, AT, BE, BG, BR, BY, CA, CH, CN, CS, CU, CZ, DD, DE, DK, EA, EE, EP, ES, FI, FR, GB, HR, HU, ID, IE, IL, IS, IT, JP, KR, LT, LU, LV, MA, OA, RU, SU, WO, MC, MD, MY, NL, NO, NZ, PH, PL, PT, RO, RS, SE, SG, SI, SK, TH, TN, TR, TW, UA, VN); FPRS; EPO; JPO; DERWENT; IBM_TDB)	OR	ON	ON	2024/11/27 10:16 PM
L119	601	112 116 117	(US-PGPUB; USPAT; USOCR; FIT (AU, AP, AT, BE, BG, BR, BY, CA, CH, CN, CS, CU, CZ, DD, DE, DK, EA, EE, EP, ES, FI, FR, GB, HR, HU, ID, IE, IL, IS, IT, JP, KR, LT, LU, LV, MA, OA, RU, SU, WO, MC, MD, MY, NL, NO, NZ, PH, PL, PT, RO, RS, SE, SG, SI, SK, TH, TN, TR, TW, UA, VN); FPRS; EPO; JPO; DERWENT; IBM_TDB)	OR	ON	ON	2024/11/27 10:18 PM
L120	5	119 AND @pd>"20231213"	(US-PGPUB; USPAT; USOCR; FIT (AU, AP, AT, BE, BG, BR, BY, CA, CH, CN, CS, CU, CZ, DD, DE, DK, EA, EE, EP, ES, FI, FR, GB, HR, HU, ID, IE, IL, IS, IT, JP, KR, LT, LU, LV, MA, OA, RU, SU, WO, MC, MD, MY, NL, NO, NZ, PH, PL, PT, RO,	OR	ON	ON	2024/11/27 10:18 PM

			RS, SE, SG, SI, SK, TH, TN, TR, TW, UA, VN); FPRS; EPO; JPO; DERWENT; IBM_TDB)				
L121	43601	b60w10/10.cpc.	(US-PGPUB; USPAT; USOCR; FIT (AU, AP, AT, BE, BG, BR, BY, CA, CH, CN, CS, CU, CZ, DD, DE, DK, EA, EE, EP, ES, FI, FR, GB, HR, HU, ID, IE, IL, IS, IT, JP, KR, LT, LU, LV, MA, OA, RU, SU, WO, MC, MD, MY, NL, NO, NZ, PH, PL, PT, RO, RS, SE, SG, SI, SK, TH, TN, TR, TW, UA, VN); FPRS; EPO; JPO; DERWENT; IBM_TDB)	OR	ON	ON	2024/11/27 10:18 PM
L122	10	121 AND (((drive forward) near4 revers$3) WITH semi$2automatic$4 WITH ((driver user operator) near4 (select$3 choos$3 choice activat$3 confirm$3)))	(US-PGPUB; USPAT; USOCR; FIT (AP, AT, AU, BE, BG, BR, BY, CA, CH, CN, CS, CU, CZ, DD, DE, DK, EA, EE, EP, ES, FI, FR, GB, HR, HU, ID, IE, IL, IS, IT, JP, KR, LT, LU, LV, MA, MC, MD, MY, NL, NO, NZ, OA, PH, PL, PT, RO, RS, RU, SE, SG, SI, SK, SU, TH, TN, TR, TW, UA, VN, WO); FPRS; EPO; JPO; DERWENT; IBM_TDB)	OR	ON	ON	2024/11/27 10:22 PM
L123	601	119 122	(US-PGPUB; USPAT; USOCR; FIT (AU, AP, AT, BE, BG, BR, BY, CA, CH, CN, CS, CU, CZ, DD, DE, DK, EA, EE, EP, ES, FI, FR, GB, HR, HU, ID, IE, IL, IS, IT, JP, KR, LT, LU, LV, MA, OA, RU, SU, WO, MC, MD, MY, NL, NO, NZ, PH, PL, PT, RO, RS, SE, SG, SI, SK, TH, TN, TR, TW, UA, VN); FPRS; EPO; JPO; DERWENT; IBM_TDB)	OR	ON	ON	2024/11/27 10:22 PM
L124	44907	b60w10/20.cpc.	(US-PGPUB; USPAT; USOCR; FIT (AU, AP, AT, BE, BG, BR, BY,	OR	ON	ON	2024/11/27 10:22 PM

			CA, CH, CN, CS, CU, CZ, DD, DE, DK, EA, EE, EP, ES, FI, FR, GB, HR, HU, ID, IE, IL, IS, IT, JP, KR, LT, LU, LV, MA, OA, RU, SU, WO, MC, MD, MY, NL, NO, NZ, PH, PL, PT, RO, RS, SE, SG, SI, SK, TH, TN, TR, TW, UA, VN); FPRS; EPO; JPO; DERWENT; IBM_TDB)				
L125	1	124 AND (((drive forward) near4 revers$3) WITH semi$2automatic$4 WITH ((driver user operator) near4 (select$3 choos$3 choice activat$3 confirm$3)))	(US-PGPUB; USPAT; USOCR; FIT (AP, AT, AU, BE, BG, BR, BY, CA, CH, CN, CS, CU, CZ, DD, DE, DK, EA, EE, EP, ES, FI, FR, GB, HR, HU, ID, IE, IL, IS, IT, JP, KR, LT, LU, LV, MA, MC, MD, MY, NL, NO, NZ, OA, PH, PL, PT, RO, RS, RU, SE, SG, SI, SK, SU, TH, TN, TR, TW, UA, VN, WO); FPRS; EPO; JPO; DERWENT; IBM_TDB)	OR	ON	ON	2024/11/27 10:22 PM
L126	601	123 125	(US-PGPUB; USPAT; USOCR; FIT (AU, AP, AT, BE, BG, BR, BY, CA, CH, CN, CS, CU, CZ, DD, DE, DK, EA, EE, EP, ES, FI, FR, GB, HR, HU, ID, IE, IL, IS, IT, JP, KR, LT, LU, LV, MA, OA, RU, SU, WO, MC, MD, MY, NL, NO, NZ, PH, PL, PT, RO, RS, SE, SG, SI, SK, TH, TN, TR, TW, UA, VN); FPRS; EPO; JPO; DERWENT; IBM_TDB)	OR	ON	ON	2024/11/27 10:22 PM
L127	6146	b60w30/18009.cpc.	(US-PGPUB; USPAT; USOCR; FIT (AU, AP, AT, BE, BG, BR, BY, CA, CH, CN, CS, CU, CZ, DD, DE, DK, EA, EE, EP, ES, FI, FR, GB, HR, HU, ID, IE, IL, IS, IT, JP, KR, LT, LU, LV, MA, OA, RU, SU, WO, MC, MD, MY, NL, NO, NZ, PH, PL, PT, RO, RS, SE, SG, SI, SK,	OR	ON	ON	2024/11/27 10:22 PM

			TH, TN, TR, TW, UA, VN); FPRS; EPO; JPO; DERWENT; IBM_TDB)				
L128	0	127 AND (((drive forward) near4 revers$3) WITH semi$2automatic$4 WITH ((driver user operator) near4 (select$3 choos$3 choice activat$3 confirm$3)))	(US-PGPUB; USPAT; USOCR; FIT (AP, AT, AU, BE, BG, BR, BY, CA, CH, CN, CS, CU, CZ, DD, DE, DK, EA, EE, EP, ES, FI, FR, GB, HR, HU, ID, IE, IL, IS, IT, JP, KR, LT, LU, LV, MA, MC, MD, MY, NL, NO, NZ, OA, PH, PL, PT, RO, RS, RU, SE, SG, SI, SK, SU, TH, TN, TR, TW, UA, VN, WO); FPRS; EPO; JPO; DERWENT; IBM_TDB)	OR	ON	ON	2024/11/27 10:22 PM
L129	601	126 128	(US-PGPUB; USPAT; USOCR; FIT (AU, AP, AT, BE, BG, BR, BY, CA, CH, CN, CS, CU, CZ, DD, DE, DK, EA, EE, EP, ES, FI, FR, GB, HR, HU, ID, IE, IL, IS, IT, JP, KR, LT, LU, LV, MA, OA, RU, SU, WO, MC, MD, MY, NL, NO, NZ, PH, PL, PT, RO, RS, SE, SG, SI, SK, TH, TN, TR, TW, UA, VN); FPRS; EPO; JPO; DERWENT; IBM_TDB)	OR	ON	ON	2024/11/27 10:23 PM
L130	20050	b60w50/082.cpc.	(US-PGPUB; USPAT; USOCR; FIT (AU, AP, AT, BE, BG, BR, BY, CA, CH, CN, CS, CU, CZ, DD, DE, DK, EA, EE, EP, ES, FI, FR, GB, HR, HU, ID, IE, IL, IS, IT, JP, KR, LT, LU, LV, MA, OA, RU, SU, WO, MC, MD, MY, NL, NO, NZ, PH, PL, PT, RO, RS, SE, SG, SI, SK, TH, TN, TR, TW, UA, VN); FPRS; EPO; JPO; DERWENT; IBM_TDB)	OR	ON	ON	2024/11/27 10:23 PM
L131	0	130 AND (((drive forward) near4 revers$3) WITH semi$2automatic$4	(US-PGPUB; USPAT; USOCR; FIT (AP, AT, AU, BE, BG, BR, BY, CA, CH, CN, CS, CU,	OR	ON	ON	2024/11/27 10:23 PM

		WITH ((driver user operator) near4 (select$3 choos$3 choice activat$3 confirm$3)))	CZ, DD, DE, DK, EA, EE, EP, ES, FI, FR, GB, HR, HU, ID, IE, IL, IS, IT, JP, KR, LT, LU, LV, MA, MC, MD, MY, NL, NO, NZ, OA, PH, PL, PT, RO, RS, RU, SE, SG, SI, SK, SU, TH, TN, TR, TW, UA, VN, WO); FPRS; EPO; JPO; DERWENT; IBM_TDB)				
L132	601	129 131	(US-PGPUB; USPAT; USOCR; FIT (AU, AP, AT, BE, BG, BR, BY, CA, CH, CN, CS, CU, CZ, DD, DE, DK, EA, EE, EP, ES, FI, FR, GB, HR, HU, ID, IE, IL, IS, IT, JP, KR, LT, LU, LV, MA, OA, RU, SU, WO, MC, MD, MY, NL, NO, NZ, PH, PL, PT, RO, RS, SE, SG, SI, SK, TH, TN, TR, TW, UA, VN); FPRS; EPO; JPO; DERWENT; IBM_TDB)	OR	ON	ON	2024/11/27 10:23 PM
L133	16455	b60w50/10.cpc.	(US-PGPUB; USPAT; USOCR; FIT (AU, AP, AT, BE, BG, BR, BY, CA, CH, CN, CS, CU, CZ, DD, DE, DK, EA, EE, EP, ES, FI, FR, GB, HR, HU, ID, IE, IL, IS, IT, JP, KR, LT, LU, LV, MA, OA, RU, SU, WO, MC, MD, MY, NL, NO, NZ, PH, PL, PT, RO, RS, SE, SG, SI, SK, TH, TN, TR, TW, UA, VN); FPRS; EPO; JPO; DERWENT; IBM_TDB)	OR	ON	ON	2024/11/27 10:23 PM
L134	1	133 AND (((drive forward) near4 revers$3) WITH semi$2automatic$4 WITH ((driver user operator) near4 (select$3 choos$3 choice activat$3 confirm$3)))	(US-PGPUB; USPAT; USOCR; FIT (AP, AT, AU, BE, BG, BR, BY, CA, CH, CN, CS, CU, CZ, DD, DE, DK, EA, EE, EP, ES, FI, FR, GB, HR, HU, ID, IE, IL, IS, IT, JP, KR, LT, LU, LV, MA, MC, MD, MY, NL, NO, NZ, OA, PH, PL, PT, RO, RS, RU, SE, SG, SI, SK, SU, TH, TN, TR, TW, UA, VN,	OR	ON	ON	2024/11/27 10:23 PM

			WO); FPRS; EPO; JPO; DERWENT; IBM_TDB)				
L135	601	132 134	(US-PGPUB; USPAT; USOCR; FIT (AU, AP, AT, BE, BG, BR, BY, CA, CH, CN, CS, CU, CZ, DD, DE, DK, EA, EE, EP, ES, FI, FR, GB, HR, HU, ID, IE, IL, IS, IT, JP, KR, LT, LU, LV, MA, OA, RU, SU, WO, MC, MD, MY, NL, NO, NZ, PH, PL, PT, RO, RS, SE, SG, SI, SK, TH, TN, TR, TW, UA, VN); FPRS; EPO; JPO; DERWENT; IBM_TDB)	OR	ON	ON	2024/11/27 10:23 PM
L136	37774	b60w2540/12.cpc.	(US-PGPUB; USPAT; USOCR; FIT (AU, AP, AT, BE, BG, BR, BY, CA, CH, CN, CS, CU, CZ, DD, DE, DK, EA, EE, EP, ES, FI, FR, GB, HR, HU, ID, IE, IL, IS, IT, JP, KR, LT, LU, LV, MA, OA, RU, SU, WO, MC, MD, MY, NL, NO, NZ, PH, PL, PT, RO, RS, SE, SG, SI, SK, TH, TN, TR, TW, UA, VN); FPRS; EPO; JPO; DERWENT; IBM_TDB)	OR	ON	ON	2024/11/27 10:24 PM
L137	7	136 AND (((drive forward) near4 revers$3) WITH semi$2automatic$4 WITH ((driver user operator) near4 (select$3 choos$3 choice activat$3 confirm$3)))	(US-PGPUB; USPAT; USOCR; FIT (AP, AT, AU, BE, BG, BR, BY, CA, CH, CN, CS, CU, CZ, DD, DE, DK, EA, EE, EP, ES, FI, FR, GB, HR, HU, ID, IE, IL, IS, IT, JP, KR, LT, LU, LV, MA, MC, MD, MY, NL, NO, NZ, OA, PH, PL, PT, RO, RS, RU, SE, SG, SI, SK, SU, TH, TN, TR, TW, UA, VN, WO); FPRS; EPO; JPO; DERWENT; IBM_TDB)	OR	ON	ON	2024/11/27 10:24 PM
L138	601	135 137	(US-PGPUB; USPAT; USOCR; FIT (AU, AP, AT, BE, BG, BR, BY, CA, CH, CN, CS, CU, CZ, DD, DE, DK, EA,	OR	ON	ON	2024/11/27 10:24 PM

			EE, EP, ES, FI, FR, GB, HR, HU, ID, IE, IL, IS, IT, JP, KR, LT, LU, LV, MA, OA, RU, SU, WO, MC, MD, MY, NL, NO, NZ, PH, PL, PT, RO, RS, SE, SG, SI, SK, TH, TN, TR, TW, UA, VN); FPRS; EPO; JPO; DERWENT; IBM_TDB)				
L139	12339	g08g1/22.cpc.	(US-PGPUB; USPAT; USOCR; FIT (AU, AP, AT, BE, BG, BR, BY, CA, CH, CN, CS, CU, CZ, DD, DE, DK, EA, EE, EP, ES, FI, FR, GB, HR, HU, ID, IE, IL, IS, IT, JP, KR, LT, LU, LV, MA, OA, RU, SU, WO, MC, MD, MY, NL, NO, NZ, PH, PL, PT, RO, RS, SE, SG, SI, SK, TH, TN, TR, TW, UA, VN); FPRS; EPO; JPO; DERWENT; IBM_TDB)	OR	ON	ON	2024/11/27 10:24 PM
L140	0	139 AND (((drive forward) near4 revers$3) WITH semi$2automatic$4 WITH ((driver user operator) near4 (select$3 choos$3 choice activat$3 confirm$3)))	(US-PGPUB; USPAT; USOCR; FIT (AP, AT, AU, BE, BG, BR, BY, CA, CH, CN, CS, CU, CZ, DD, DE, DK, EA, EE, EP, ES, FI, FR, GB, HR, HU, ID, IE, IL, IS, IT, JP, KR, LT, LU, LV, MA, MC, MD, MY, NL, NO, NZ, OA, PH, PL, PT, RO, RS, RU, SE, SG, SI, SK, SU, TH, TN, TR, TW, UA, VN, WO); FPRS; EPO; JPO; DERWENT; IBM_TDB)	OR	ON	ON	2024/11/27 10:24 PM
L141	601	138 140	(US-PGPUB; USPAT; USOCR; FIT (AU, AP, AT, BE, BG, BR, BY, CA, CH, CN, CS, CU, CZ, DD, DE, DK, EA, EE, EP, ES, FI, FR, GB, HR, HU, ID, IE, IL, IS, IT, JP, KR, LT, LU, LV, MA, OA, RU, SU, WO, MC, MD, MY, NL, NO, NZ, PH, PL, PT, RO, RS, SE, SG, SI, SK, TH, TN, TR, TW, UA, VN); FPRS; EPO;	OR	ON	ON	2024/11/27 10:24 PM

			JPO; DERWENT; IBM_TDB)				
L142	10	langlotz-bennet.in.	(US-PGPUB; USPAT; USOCR; FIT (AU, AP, AT, BE, BG, BR, BY, CA, CH, CN, CS, CU, CZ, DD, DE, DK, EA, EE, EP, ES, FI, FR, GB, HR, HU, ID, IE, IL, IS, IT, JP, KR, LT, LU, LV, MA, OA, RU, SU, WO, MC, MD, MY, NL, NO, NZ, PH, PL, PT, RO, RS, SE, SG, SI, SK, TH, TN, TR, TW, UA, VN); FPRS; EPO; JPO; DERWENT; IBM_TDB)	OR	ON	ON	2024/11/27 10:27 PM
L143	611	141 142	(US-PGPUB; USPAT; USOCR; FIT (AU, AP, AT, BE, BG, BR, BY, CA, CH, CN, CS, CU, CZ, DD, DE, DK, EA, EE, EP, ES, FI, FR, GB, HR, HU, ID, IE, IL, IS, IT, JP, KR, LT, LU, LV, MA, OA, RU, SU, WO, MC, MD, MY, NL, NO, NZ, PH, PL, PT, RO, RS, SE, SG, SI, SK, TH, TN, TR, TW, UA, VN); FPRS; EPO; JPO; DERWENT; IBM_TDB)	OR	ON	ON	2024/11/27 10:30 PM
L144	3	"18928131"	(US-PGPUB; USPAT; USOCR; FIT (AU, AP, AT, BE, BG, BR, BY, CA, CH, CN, CS, CU, CZ, DD, DE, DK, EA, EE, EP, ES, FI, FR, GB, HR, HU, ID, IE, IL, IS, IT, JP, KR, LT, LU, LV, MA, OA, RU, SU, WO, MC, MD, MY, NL, NO, NZ, PH, PL, PT, RO, RS, SE, SG, SI, SK, TH, TN, TR, TW, UA, VN); FPRS; EPO; JPO; DERWENT; IBM_TDB)	OR	ON	ON	2024/11/30 01:15 PM
L145	614	143 144	(US-PGPUB; USPAT; USOCR; FIT (AU, AP, AT, BE, BG, BR, BY, CA, CH, CN, CS, CU, CZ, DD, DE, DK, EA, EE, EP, ES, FI, FR, GB,	OR	ON	ON	2024/11/30 01:15 PM

			HR, HU, ID, IE, IL, IS, IT, JP, KR, LT, LU, LV, MA, OA, RU, SU, WO, MC, MD, MY, NL, NO, NZ, PH, PL, PT, RO, RS, SE, SG, SI, SK, TH, TN, TR, TW, UA, VN); FPRS; EPO; JPO; DERWENT; IBM_TDB)				
L146	4811	(shift$3 WITH ((drive forward) near4 reverse) WITH steer$3)	(US-PGPUB; USPAT; USOCR; FIT (AU, AP, AT, BE, BG, BR, BY, CA, CH, CN, CS, CU, CZ, DD, DE, DK, EA, EE, EP, ES, FI, FR, GB, HR, HU, ID, IE, IL, IS, IT, JP, KR, LT, LU, LV, MA, OA, RU, SU, WO, MC, MD, MY, NL, NO, NZ, PH, PL, PT, RO, RS, SE, SG, SI, SK, TH, TN, TR, TW, UA, VN); FPRS; EPO; JPO; DERWENT; IBM_TDB)	OR	ON	ON	2024/11/30 01:17 PM
L147	269	(shift$3 WITH ((drive forward) near4 reverse) WITH steer$3) AND autonomous$2	(US-PGPUB; USPAT; USOCR; FIT (AU, AP, AT, BE, BG, BR, BY, CA, CH, CN, CS, CU, CZ, DD, DE, DK, EA, EE, EP, ES, FI, FR, GB, HR, HU, ID, IE, IL, IS, IT, JP, KR, LT, LU, LV, MA, OA, RU, SU, WO, MC, MD, MY, NL, NO, NZ, PH, PL, PT, RO, RS, SE, SG, SI, SK, TH, TN, TR, TW, UA, VN); FPRS; EPO; JPO; DERWENT; IBM_TDB)	OR	ON	ON	2024/11/30 01:18 PM
L148	267	147 NOT 145	(US-PGPUB; USPAT; USOCR; FIT (AU, AP, AT, BE, BG, BR, BY, CA, CH, CN, CS, CU, CZ, DD, DE, DK, EA, EE, EP, ES, FI, FR, GB, HR, HU, ID, IE, IL, IS, IT, JP, KR, LT, LU, LV, MA, OA, RU, SU, WO, MC, MD, MY, NL, NO, NZ, PH, PL, PT, RO, RS, SE, SG, SI, SK, TH, TN, TR, TW, UA, VN); FPRS; EPO; JPO; DERWENT;	OR	ON	ON	2024/11/30 01:18 PM

			IBM_TDB)				
L149	881	145 147	(US-PGPUB; USPAT; USOCR; FIT (AU, AP, AT, BE, BG, BR, BY, CA, CH, CN, CS, CU, CZ, DD, DE, DK, EA, EE, EP, ES, FI, FR, GB, HR, HU, ID, IE, IL, IS, IT, JP, KR, LT, LU, LV, MA, OA, RU, SU, WO, MC, MD, MY, NL, NO, NZ, PH, PL, PT, RO, RS, SE, SG, SI, SK, TH, TN, TR, TW, UA, VN); FPRS; EPO; JPO; DERWENT; IBM_TDB)	OR	ON	ON	2024/11/30 02:10 PM
L150	1	"18403221"	(US-PGPUB; USPAT; USOCR; FIT (AU, AP, AT, BE, BG, BR, BY, CA, CH, CN, CS, CU, CZ, DD, DE, DK, EA, EE, EP, ES, FI, FR, GB, HR, HU, ID, IE, IL, IS, IT, JP, KR, LT, LU, LV, MA, OA, RU, SU, WO, MC, MD, MY, NL, NO, NZ, PH, PL, PT, RO, RS, SE, SG, SI, SK, TH, TN, TR, TW, UA, VN); FPRS; EPO; JPO; DERWENT; IBM_TDB)	OR	ON	ON	2024/11/30 02:11 PM
L151	13	(shift$3 WITH ((drive forward) near4 reverse) WITH steer$3 WITH brak$3 WITH (sequence pattern))	(US-PGPUB; USPAT; USOCR; FIT (AP, AT, AU, BE, BG, BR, BY, CA, CH, CN, CS, CU, CZ, DD, DE, DK, EA, EE, EP, ES, FI, FR, GB, HR, HU, ID, IE, IL, IS, IT, JP, KR, LT, LU, LV, MA, MC, MD, MY, NL, NO, NZ, OA, PH, PL, PT, RO, RS, RU, SE, SG, SI, SK, SU, TH, TN, TR, TW, UA, VN, WO); FPRS; EPO; JPO; DERWENT; IBM_TDB)	OR	ON	ON	2024/12/02 04:30 PM
L154	20	"63371370"	(US-PGPUB; USPAT; USOCR; FIT (AU, AP, AT, BE, BG, BR, BY, CA, CH, CN, CS, CU, CZ, DD, DE, DK, EA, EE, EP, ES, FI, FR, GB, HR, HU, ID, IE, IL, IS,	OR	ON	ON	2024/12/05 12:37 PM

			IT, JP, KR, LT, LU, LV, MA, OA, RU, SU, WO, MC, MD, MY, NL, NO, NZ, PH, PL, PT, RO, RS, SE, SG, SI, SK, TH, TN, TR, TW, UA, VN); FPRS; EPO; JPO; DERWENT; IBM_TDB)				
L155	13	(149 151) AND @pd>"20241126"	(US-PGPUB; USPAT; USOCR; FIT (AU, AP, AT, BE, BG, BR, BY, CA, CH, CN, CS, CU, CZ, DD, DE, DK, EA, EE, EP, ES, FI, FR, GB, HR, HU, ID, IE, IL, IS, IT, JP, KR, LT, LU, LV, MA, OA, RU, SU, WO, MC, MD, MY, NL, NO, NZ, PH, PL, PT, RO, RS, SE, SG, SI, SK, TH, TN, TR, TW, UA, VN); FPRS; EPO; JPO; DERWENT; IBM_TDB)	OR	ON	ON	2024/12/21 03:47 PM
L156	9	("11001301" OR "11623636" OR "12049217" OR "12065130" OR "12084047" OR "12151677" OR "9085321" OR "9219887" OR "9381922").pn.	(US-PGPUB; USPAT)	OR	ON	ON	2024/12/21 03:49 PM
L157	0	N4 AND @pd>"20241126"	(US-PGPUB; USPAT; USOCR; FIT (AU, AP, AT, BE, BG, BR, BY, CA, CH, CN, CS, CU, CZ, DD, DE, DK, EA, EE, EP, ES, FI, FR, GB, HR, HU, ID, IE, IL, IS, IT, JP, KR, LT, LU, LV, MA, OA, RU, SU, WO, MC, MD, MY, NL, NO, NZ, PH, PL, PT, RO, RS, SE, SG, SI, SK, TH, TN, TR, TW, UA, VN); FPRS; EPO; JPO; DERWENT; IBM_TDB)	OR	ON	ON	2024/12/21 04:44 PM

PE2E SEARCH - Search History (Interference)

Ref #	Hits	Search Query	DBs	Default Operator	Plurals	British Equivalents	Time Stamp
N1	29	(((forward front$4 drive)	(US-PGPUB; USPAT)	OR	ON	ON	2023/12/14

		near4 (revers$3 back$4) near4 (shift$3 chang$3 auto$shift$3 offer$3 suggest$3)) near4 ((steer$3 near2 angle) OR (park$3 near4 (tim$3 distance velocity speed)) OR ((location position$3) near2 vehicle))).clm.					01:10 PM
N2	0	N1 AND @pd>"20231213"	(US-PGPUB; USPAT)	OR	ON	ON	2023/12/20 02:09 PM
N3	2	N1 AND @pd>"20231212"	(US-PGPUB; USPAT)	OR	ON	ON	2024/11/27 10:31 PM
N4	0	(shift$3 WITH ((drive forward) near4 reverse) WITH steer$3 WITH brak$3 WITH (sequence pattern)).clm.	(US-PGPUB; USPAT)	OR	ON	ON	2024/12/02 04:31 PM

United States Patent and Trademark Office

Office of the Commissioner for Patents

Dear Applicant,

You recently received an Office action from your examiner. Review of your patent application is under way! You can continue to advertise or mark any products covered by your application for your invention as "Patent Pending" for as long as this application is pending. This letter provides information about how to continue through the patent application process and the help available to you on your journey.

Where are you in the patent application process? Your patent application is now in step 3, Application Prosecution (www.uspto.gov/UtilityPatentGuide.) Though the Office action includes a "rejection," that does not mean that you don't have a good idea you can patent. It means your examiner believes your application is not yet ready for allowance.

Ready to respond? Responding to the Office action is your opportunity to address the issues raised by your examiner. Responses must be timely, complete, and in writing. In your response, you may want to consider amending your application (www.uspto.gov/patents/maintain/responding-office-actions).

We provide Pro Se Assistance, support specifically geared for independent inventors without an agent or attorney. Visit www.uspto.gov/ProSePatents for a consolidated list of resources, including a sample amendment format. Full description of amendment formatting can be found at www.uspto.gov/web/offices/pac/mpep/s714.html. Call us at 866-767-3848, or email proseassistancecenter@uspto.gov.

Have questions about the Office action? Contact your examiner! A conversation with your examiner (called an "interview") may help clarify and resolve any issues and possibly identify what you can patent. While an interview does not stop the clock for your official response or substitute for a response, there is no fee for an interview. To schedule a call or video, you can:

1. use the USPTO's Automated Interview Request (AIR) form (www.uspto.gov/patents/uspto-automated-interview-request-air-form);
2. file the Applicant Initiated Interview Request form (PTOL-413A) (www.uspto.gov/sites/default/files/documents/PTOL413A.pdf); or
3. contact your examiner directly via telephone (contact information is provided at the end of your Office action).

Need help near you? We have regional offices across the country (www.uspto.gov/locations), as well as Patent and Trademark Resource Centers in libraries in nearly every state (www.uspto.gov/ptrc), with specialists standing by to help you at no cost.

Become a *registered* electronic filer (registered eFiler). As a registered eFiler, you can electronically view your submission, track progress of your application, and respond to USPTO correspondence. (www.uspto.gov/NewPatentFilers)

Contact us

- General information: USPTO Contact Center — 800-786-9199 • TTY/TDD 800-877-8339 • www.uspto.gov/help
- Patent Center: Patent Electronic Business Center www.uspto.gov/EBC
- Inventors Assistance Center www.uspto.gov/inventorassistance

Want to learn more?

- Hear about resources for startups, inventors, and entrepreneurs, as well as our initiatives engaging women, the military community, and others. These programs offer helpful tips and tricks on identifying and managing your IP, finding options for funding, and expanding your network to support your business.
  - www.uspto.gov/startups
  - www.uspto.gov/inventors
  - www.uspto.gov/initiatives
- Access our free services all in one spot. Find all of our contact centers, nationwide services, events, education and training. (www.uspto.gov/FreeServices)
- Connect with us on Instagram, LinkedIn, Twitter, Facebook, and YouTube.
- Hear about the great things we are doing by subscribing at www.uspto.gov/subscribe.

Best,

Vaishali Udupa
Commissioner for Patents
United States Patent and Trademark Office

UNITED STATES PATENT AND TRADEMARK OFFICE

UNITED STATES DEPARTMENT OF COMMERCE
United States Patent and Trademark Office
Address: COMMISSIONER FOR PATENTS
P.O. Box 1450
Alexandria, Virginia 22313-1450
www.uspto.gov

NOTICE OF ALLOWANCE AND FEE(S) DUE

25917 7590 01/15/2025
LANGLOTZ PATENT & TRADEMARK WORKS, LLC
PO BOX 660675 #37585
Dallas, TX 75266-0675

EXAMINER
YOUNG, EDWIN

ART UNIT	PAPER NUMBER
3655	

DATE MAILED: 01/15/2025

APPLICATION NO.	FILING DATE	FIRST NAMED INVENTOR	ATTORNEY DOCKET NO.	CONFIRMATION NO.
18/928,135	10/27/2024	Bennet Langlotz	BKL-11C5	1124

TITLE OF INVENTION: VEHICLE GEAR SELECTION CONTROL

APPLN. TYPE	ENTITY STATUS	ISSUE FEE DUE	PUBLICATION FEE DUE	PREV. PAID ISSUE FEE	TOTAL FEE(S) DUE	DATE DUE
nonprovisional	SMALL	$480	$0.00	$0.00	$480	04/15/2025

THE APPLICATION IDENTIFIED ABOVE HAS BEEN EXAMINED AND IS ALLOWED FOR ISSUANCE AS A PATENT. PROSECUTION ON THE MERITS IS CLOSED. THIS NOTICE OF ALLOWANCE IS NOT A GRANT OF PATENT RIGHTS. THIS APPLICATION IS SUBJECT TO WITHDRAWAL FROM ISSUE AT THE INITIATIVE OF THE OFFICE OR UPON PETITION BY THE APPLICANT. SEE 37 CFR 1.313 AND MPEP 1308.

THE ISSUE FEE AND PUBLICATION FEE (IF REQUIRED) MUST BE PAID WITHIN THREE MONTHS FROM THE MAILING DATE OF THIS NOTICE OR THIS APPLICATION SHALL BE REGARDED AS ABANDONED. THIS STATUTORY PERIOD CANNOT BE EXTENDED. SEE 35 U.S.C. 151. THE ISSUE FEE DUE INDICATED ABOVE DOES NOT REFLECT A CREDIT FOR ANY PREVIOUSLY PAID ISSUE FEE IN THIS APPLICATION. IF AN ISSUE FEE HAS PREVIOUSLY BEEN PAID IN THIS APPLICATION (AS SHOWN ABOVE), THE RETURN OF PART B OF THIS FORM WILL BE CONSIDERED A REQUEST TO REAPPLY THE PREVIOUSLY PAID ISSUE FEE TOWARD THE ISSUE FEE NOW DUE.

HOW TO REPLY TO THIS NOTICE:

I. Review the ENTITY STATUS shown above. If the ENTITY STATUS is shown as SMALL or MICRO, verify whether entitlement to that entity status still applies.

If the ENTITY STATUS is the same as shown above, pay the TOTAL FEE(S) DUE shown above.

If the ENTITY STATUS is changed from that shown above, on PART B - FEE(S) TRANSMITTAL, complete section number 5 titled "Change in Entity Status (from status indicated above)".

For purposes of this notice, small entity fees are 40% the amount of undiscounted fees, and micro entity fees are 20% the amount of undiscounted fees.

II. PART B - FEE(S) TRANSMITTAL, or its equivalent, must be completed and returned to the United States Patent and Trademark Office (USPTO) with your ISSUE FEE and PUBLICATION FEE (if required). If you are charging the fee(s) to your deposit account, section "4b" of Part B - Fee(s) Transmittal should be completed. If an equivalent of Part B is filed, a request to reapply a previously paid issue fee must be clearly made, and delays in processing may occur due to the difficulty in recognizing the paper as an equivalent of Part B.

III. All communications regarding this application must give the application number. Please direct all communications prior to issuance to Mail Stop ISSUE FEE unless advised to the contrary.

IMPORTANT REMINDER: Maintenance fees are due in utility patents issuing on applications filed on or after Dec. 12, 1980. It is patentee's responsibility to ensure timely payment of maintenance fees when due. More information is available at www.uspto.gov/PatentMaintenanceFees.

PART B - FEE(S) TRANSMITTAL

Complete and send this form, together with applicable fee(s), by mail or fax, or via the USPTO patent electronic filing system.

By mail, send to: Mail Stop ISSUE FEE
Commissioner for Patents
P.O. Box 1450
Alexandria, Virginia 22313-1450

By fax, send to: (571)-273-2885

INSTRUCTIONS: This form should be used for transmitting the ISSUE FEE and PUBLICATION FEE (if required). Blocks 1 through 5 should be completed where appropriate. All further correspondence will be mailed to the current correspondence address as indicated unless corrected below or directed otherwise in Block 1, by (a) specifying a new correspondence address; and/or (b) indicating a separate "FEE ADDRESS" for maintenance fee notifications. **Because electronic patent issuance may occur shortly after issue fee payment, any desired continuing application should preferably be filed prior to payment of this issue fee in order not to jeopardize copendency.**

CURRENT CORRESPONDENCE ADDRESS (Note: Use Block 1 for any change of address)

25917 7590 01/15/2025
LANGLOTZ PATENT & TRADEMARK WORKS, LLC
PO BOX 660675 #37585
Dallas, TX 75266-0675

Note: A certificate of mailing can only be used for domestic mailings of the Fee(s) Transmittal. This certificate cannot be used for any other accompanying papers. Each additional paper, such as an assignment or formal drawing, must have its own certificate of mailing or transmission.

Certificate of Mailing or Transmission

I hereby certify that this Fee(s) Transmittal is being deposited with the United States Postal Service with sufficient postage for first class mail in an envelope addressed to the Mail Stop ISSUE FEE address above, or being transmitted to the USPTO via the USPTO patent electronic filing system or by facsimile to (571) 273-2885, on the date below.

(Typed or printed name)
(Signature)
(Date)

APPLICATION NO.	FILING DATE	FIRST NAMED INVENTOR	ATTORNEY DOCKET NO.	CONFIRMATION NO.
18/928,135	10/27/2024	Bennet Langlotz	BKL-11C5	1124

TITLE OF INVENTION: VEHICLE GEAR SELECTION CONTROL

APPLN. TYPE	ENTITY STATUS	ISSUE FEE DUE	PUBLICATION FEE DUE	PREV. PAID ISSUE FEE	TOTAL FEE(S) DUE	DATE DUE
nonprovisional	SMALL	$480	$0.00	$0.00	$480	04/15/2025

EXAMINER	ART UNIT	CLASS-SUBCLASS
YOUNG, EDWIN	3655	701-041000

1. Change of correspondence address or indication of "Fee Address" (37 CFR 1.363).

❑ Change of correspondence address (or Change of Correspondence Address form PTO/AIA/122 or PTO/SB/122) attached.

❑ "Fee Address" indication (or "Fee Address" Indication form PTO/AIA/47 or PTO/SB/47; Rev 03-02 or more recent) attached. **Use of a Customer Number is required.**

2. For printing on the patent front page, list
(1) The names of up to 3 registered patent attorneys or agents OR, alternatively,
(2) The name of a single firm (having as a member a registered attorney or agent) and the names of up to 2 registered patent attorneys or agents. If no name is listed, no name will be printed.

1_____
2_____
3_____

3. ASSIGNEE NAME AND RESIDENCE DATA TO BE PRINTED ON THE PATENT (print or type)

PLEASE NOTE: Unless an assignee is identified below, no assignee data will appear on the patent. If an assignee is identified below, the document must have been previously recorded, or filed for recordation, as set forth in 37 CFR 3.11 and 37 CFR 3.81(a). Completion of this form is NOT a substitute for filing an assignment.

(A) NAME OF ASSIGNEE (B) RESIDENCE: (CITY and STATE OR COUNTRY)

Please check the appropriate assignee category or categories (will not be printed on the patent) : ❑ Individual ❑ Corporation or other private group entity ❑ Government

4a. Fees submitted: ❑Issue Fee ❑Publication Fee (if required)

4b. Method of Payment: *(Please first reapply any previously paid fee shown above)*

❑ Electronic Payment via the USPTO patent electronic filing system ❑ Enclosed check ❑ Non-electronic payment by credit card (Attach form PTO-2038)

❑ The Director is hereby authorized to charge the required fee(s), any deficiency, or credit any overpayment to Deposit Account No. _____

5. **Change in Entity Status** (from status indicated above)

❑ Applicant certifying micro entity status. See 37 CFR 1.29

NOTE: Absent a valid certification of Micro Entity Status (see forms PTO/SB/15A and 15B), issue fee payment in the micro entity amount will not be accepted at the risk of application abandonment.

❑ Applicant asserting small entity status. See 37 CFR 1.27

NOTE: If the application was previously under micro entity status, checking this box will be taken to be a notification of loss of entitlement to micro entity status.

❑ Applicant changing to regular undiscounted fee status.

NOTE: Checking this box will be taken to be a notification of loss of entitlement to small or micro entity status, as applicable.

NOTE: This form must be signed in accordance with 37 CFR 1.31 and 1.33. See 37 CFR 1.4 for signature requirements and certifications.

Authorized Signature _____ Date _____

Typed or printed name _____ Registration No. _____

UNITED STATES DEPARTMENT OF COMMERCE
United States Patent and Trademark Office
Address: COMMISSIONER FOR PATENTS
P.O. Box 1450
Alexandria, Virginia 22313-1450
www.uspto.gov

APPLICATION NO.	FILING DATE	FIRST NAMED INVENTOR	ATTORNEY DOCKET NO.	CONFIRMATION NO.
18/928,135	10/27/2024	Bennet Langlotz	BKL-11C5	1124

25917 7590 01/15/2025
LANGLOTZ PATENT & TRADEMARK WORKS, LLC
PO BOX 660675 #37585
Dallas, TX 75266-0675

EXAMINER
YOUNG, EDWIN

ART UNIT	PAPER NUMBER
3655	

DATE MAILED: 01/15/2025

Determination of Patent Term Adjustment under 35 U.S.C. 154 (b)
(Applications filed on or after May 29, 2000)

The Office has discontinued providing a Patent Term Adjustment (PTA) calculation with the Notice of Allowance.

Section 1(h)(2) of the AIA Technical Corrections Act amended 35 U.S.C. 154(b)(3)(B)(i) to eliminate the requirement that the Office provide a patent term adjustment determination with the notice of allowance. See Revisions to Patent Term Adjustment, 78 Fed. Reg. 19416, 19417 (Apr. 1, 2013). Therefore, the Office is no longer providing an initial patent term adjustment determination with the notice of allowance. The Office will continue to provide a patent term adjustment determination with the Issue Notification Letter that is mailed to applicant approximately three weeks prior to the issue date of the patent, and will include the patent term adjustment on the patent. Any request for reconsideration of the patent term adjustment determination (or reinstatement of patent term adjustment) should follow the process outlined in 37 CFR 1.705.

Any questions regarding the Patent Term Extension or Adjustment determination should be directed to the Office of Patent Legal Administration at (571)-272-7702. Questions relating to issue and publication fee payments should be directed to the Customer Service Center of the Office of Patent Publication at 1-(888)-786-0101 or (571)-272-4200.

OMB Clearance and PRA Burden Statement for PTOL-85 Part B

The Paperwork Reduction Act (PRA) of 1995 requires Federal agencies to obtain Office of Management and Budget approval before requesting most types of information from the public. When OMB approves an agency request to collect information from the public, OMB (i) provides a valid OMB Control Number and expiration date for the agency to display on the instrument that will be used to collect the information and (ii) requires the agency to inform the public about the OMB Control Number's legal significance in accordance with 5 CFR 1320.5(b).

The information collected by PTOL-85 Part B is required by 37 CFR 1.311. The information is required to obtain or retain a benefit by the public which is to file (and by the USPTO to process) an application. Confidentiality is governed by 35 U.S.C. 122 and 37 CFR 1.14. This collection is estimated to take 30 minutes to complete, including gathering, preparing, and submitting the completed application form to the USPTO. Time will vary depending upon the individual case. Any comments on the amount of time you require to complete this form and/or suggestions for reducing this burden, should be sent to the Chief Information Officer, U.S. Patent and Trademark Office, U.S. Department of Commerce, P.O. Box 1450, Alexandria, Virginia 22313-1450. DO NOT SEND FEES OR COMPLETED FORMS TO THIS ADDRESS. SEND TO: Commissioner for Patents, P.O. Box 1450, Alexandria, Virginia 22313-1450. Under the Paperwork Reduction Act of 1995, no persons are required to respond to a collection of information unless it displays a valid OMB control number.

Privacy Act Statement

The Privacy Act of 1974 (P.L. 93-579) requires that you be given certain information in connection with your submission of the attached form related to a patent application or patent. The United States Patent and Trademark Office (USPTO) collects the information in this record under authority of 35 U.S.C. 2. The USPTO's system of records is used to manage all applicant and owner information including name, citizenship, residence, post office address, and other information with respect to inventors and their legal representatives pertaining to the applicant's/owner's activities in connection with the invention for which a patent is sought or has been granted. The applicable Privacy Act System of Records Notice for the information collected in this form is COMMERCE/PAT-TM-7 Patent Application Files, available in the Federal Register at 78 FR 19243 (March 29, 2013).
https://www.govinfo.gov/content/pkg/FR-2013-03-29/pdf/2013-07341.pdf

Routine uses of the information in this record may include disclosure to:

1) law enforcement, in the event that the system of records indicates a violation or potential violation of law;
2) a federal, state, local, or international agency, in response to its request;
3) a contractor of the USPTO having need for the information in order to perform a contract;
4) the Department of Justice for determination of whether the Freedom of Information Act (FOIA) requires disclosure of the record;
5) a Member of Congress submitting a request involving an individual to whom the record pertains, when the individual has requested the Member's assistance with respect to the subject matter of the record;
6) a court, magistrate, or administrative tribunal, in the course of presenting evidence, including disclosures to opposing counsel in the course of settlement negotiations;
7) the Administrator, General Services Administration (GSA), or their designee, during an inspection of records conducted by GSA under authority of 44 U.S.C. 2904 and 2906, in accordance with the GSA regulations and any other relevant (i.e., GSA or Commerce) directive, where such disclosure shall not be used to make determinations about individuals;
8) another federal agency for purposes of National Security review (35 U.S.C. 181) and for review pursuant to the Atomic Energy Act (42 U.S.C. 218(c));
9) the Office of Personnel Management (OPM) for personnel research purposes; and
10) the Office of Management and Budget (OMB) for legislative coordination and clearance.

If you do not furnish the information requested on this form, the USPTO may not be able to process and/or examine your submission, which may result in termination of proceedings, abandonment of the application, and/or expiration of the patent.

Notice of Allowability	Application No. 18/928,135	Applicant(s) Langlotz, Bennet	
	Examiner EDWIN YOUNG	Art Unit 3655	AIA (FITF) Status Yes

-- The MAILING DATE of this communication appears on the cover sheet with the correspondence address--

All claims being allowable, PROSECUTION ON THE MERITS IS (OR REMAINS) CLOSED in this application. If not included herewith (or previously mailed), a Notice of Allowance (PTOL-85) or other appropriate communication will be mailed in due course. **THIS NOTICE OF ALLOWABILITY IS NOT A GRANT OF PATENT RIGHTS.** This application is subject to withdrawal from issue at the initiative of the Office or upon petition by the applicant. See 37 CFR 1.313 and MPEP 1308.

1. ☑ This communication is responsive to the amendment filed 12/15/2024.
   ☐ A declaration(s)/affidavit(s) under **37 CFR 1.130(b)** was/were filed on _____.

2. ☐ An election was made by the applicant in response to a restriction requirement set forth during the interview on _____; the restriction requirement and election have been incorporated into this action.

3. ☑ The allowed claim(s) is/are 1-14 . As a result of the allowed claim(s), you may be eligible to benefit from the **Patent Prosecution Highway** program at a participating intellectual property office for the corresponding application. For more information, please see **http://www.uspto.gov/patents/init_events/pph/index.jsp** or send an inquiry to **PPHfeedback@uspto.gov.**

4. ☐ Acknowledgment is made of a claim for foreign priority under 35 U.S.C. § 119(a)-(d) or (f).

   Certified copies:

   a) ☐ All b) ☐ Some* c) ☐ None of the:

   1. ☐ Certified copies of the priority documents have been received.
   2. ☐ Certified copies of the priority documents have been received in Application No. _____ .
   3. ☐ Copies of the certified copies of the priority documents have been received in this national stage application from the International Bureau (PCT Rule 17.2(a)).

   * Certified copies not received: _____ .

Applicant has THREE MONTHS FROM THE "MAILING DATE" of this communication to file a reply complying with the requirements noted below. Failure to timely comply will result in ABANDONMENT of this application.
THIS THREE-MONTH PERIOD IS NOT EXTENDABLE.

5. ☐ CORRECTED DRAWINGS (as "replacement sheets") must be submitted.
   ☐ including changes required by the attached Examiner's Amendment / Comment or in the Office action of Paper No./Mail Date _____ .

   Identifying indicia such as the application number (see 37 CFR 1.84(c)) should be written on the drawings in the front (not the back) of each sheet. Replacement sheet(s) should be labeled as such in the header according to 37 CFR 1.121(d).

6. ☐ DEPOSIT OF and/or INFORMATION about the deposit of BIOLOGICAL MATERIAL must be submitted. Note the attached Examiner's comment regarding REQUIREMENT FOR THE DEPOSIT OF BIOLOGICAL MATERIAL.

Attachment(s)

1. ☐ Notice of References Cited (PTO-892)
2. ☑ Information Disclosure Statements (PTO/SB/08), Paper No./Mail Date 12/06/2024.
3. ☐ Examiner's Comment Regarding Requirement for Deposit of Biological Material _____.
4. ☐ Interview Summary (PTO-413), Paper No./Mail Date. _____.
5. ☐ Examiner's Amendment/Comment
6. ☑ Examiner's Statement of Reasons for Allowance
7. ☐ Other _____.

/Edwin A Young/
Primary Examiner, Art Unit 3655

DETAILED ACTION

Notice of Pre-AIA or AIA Status

The present application, filed on or after March 16, 2013, is being examined under the first inventor to file provisions of the AIA.

This action is responsive to the amendment filed 12/15/2024. Claims 1-14 are currently pending in this application.

Information Disclosure Statement

The information disclosure statement (IDS) submitted on 12/06/2024 has been considered by the examiner.

Terminal Disclaimer

The terminal disclaimer filed on 12/13/2024 disclaiming the terminal portion of any patent granted on this application which would extend beyond the expiration dates of Patent Number 11,932,230 and any patents granted on Application Numbers 18/928,128, 18/928,130, 18/928,131, 18/928,134 and 18/928,137 has been reviewed and is accepted. The terminal disclaimer has been recorded.

Response to Arguments

Applicant's arguments, see pages 5-7, filed 12/15/2024, with respect to Claims 1-14 have been fully considered and are persuasive. The rejections of Claims 1-14 have been withdrawn.

Note, SHIVAPRASAD et al. (US 2024/0051558 A1) discloses a vehicle control system wherein an autoshift is offered to a driver and enacted upon a driver approval indication. The earliest effective filing date of SHIVAPRASAD et al. associated with the provisional application 63/371,370 is 8/12/2022, which

precedes Applicant's earliest effective filing date of 6/5/2023. However, this provisional application does not disclose the below mentioned limitations indicated as allowable subject matter. All relevant passages in US 2024/0051558 A1 which may describe similar features as those recited in the below mentioned limitations indicated as allowable subject matter were newly presented in the non-provisional application dated 8/14/2023. Therefore, US 2024/0051558 A1 has an effective filing date of 8/14/2023 for all subject matter that is newly presented from provisional application 63/371,370. As the effective filing date for the relevant portions of US 2024/0051558 A1 is 8/14/2023 and is subsequent Applicant's earliest effective filing date of 6/5/2023, US 2024/0051558 A1 cannot be used as a prior art reference against the below mentioned limitations indicated as allowable subject matter.

Allowable Subject Matter

Claims 1-14 are allowed.

The following is an examiner's statement of reasons for allowance:

The prior art does not disclose nor render obvious a motor vehicle including the drive system operable in response to a sequence of detected steering and brake inputs when in a first one of the drive mode and reverse mode to change to the other of the drive mode and reverse mode, without operator indication of a direction, in combination with the other elements required by independent Claim 1.

The prior art does not disclose nor render obvious a motor vehicle including the controller operable in response to a sequence of detected steering and brake inputs when in a first one of the drive mode and reverse mode to change to the other of the drive mode and reverse mode, without operator indication of a direction, in combination with the other elements required by independent Claim 8.

Any comments considered necessary by applicant must be submitted no later than the payment of the issue fee and, to avoid processing delays, should preferably accompany the issue fee. Such submissions should be clearly labeled "Comments on Statement of Reasons for Allowance."

One of ordinary skill in the art would have no rationale, absent hindsight, to modify the prior art to derive the claimed invention since the above mentioned limitations, in combination with the other claim limitations, are considered new and nonobvious improvements over the prior art.

Conclusion

Any inquiry concerning this communication or earlier communications from the examiner should be directed to EDWIN YOUNG whose telephone number is (571)272-4781. The examiner can normally be reached Monday - Friday 10:00 am - 6:00 pm (CST).

Examiner interviews are available via telephone, in-person, and video conferencing using a USPTO supplied web-based collaboration tool. To schedule an interview, applicant is encouraged to use the USPTO Automated Interview Request (AIR) at http://www.uspto.gov/interviewpractice.

If attempts to reach the examiner by telephone are unsuccessful, the examiner's supervisor, Jacob S Scott can be reached on (571)270-3415. The fax phone number for the organization where this application or proceeding is assigned is 571-273-8300.

Information regarding the status of published or unpublished applications may be obtained from Patent Center. Unpublished application information in Patent Center is available to registered users. To file and manage patent submissions in Patent Center, visit: https://patentcenter.uspto.gov. Visit https://www.uspto.gov/patents/apply/patent-center for more information about Patent Center and https://www.uspto.gov/patents/docx for information about filing in DOCX format. For additional questions, contact the Electronic Business Center (EBC) at 866-217-9197 (toll-free). If you would like

assistance from a USPTO Customer Service Representative, call 800-786-9199 (IN USA OR CANADA) or

571-272-1000.

EDWIN YOUNG
Primary Examiner
Art Unit 3659

/Edwin A Young/
Primary Examiner, Art Unit 3655

UNITED STATES
PATENT AND TRADEMARK OFFICE

P.O. Box 1450
Alexandria, VA 22313 - 1450
www.uspto.gov

ELECTRONIC PAYMENT RECEIPT

APPLICATION #	RECEIPT DATE / TIME	ATTORNEY DOCKET #
18/928,135	**01/16/2025 12:40:23 PM Z ET**	**BKL-11C5**

Title of Invention

VEHICLE GEAR SELECTION CONTROL

Application Information

APPLICATION TYPE	Utility - Nonprovisional Application under 35 USC 111(a)	PATENT #	-
CONFIRMATION #	1124	FILED BY	Russell Crawford
PATENT CENTER #	68771736	AUTHORIZED BY	Bennet Langlotz
CUSTOMER #	25917	FILING DATE	10/27/2024
CORRESPONDENCE ADDRESS	-	FIRST NAMED INVENTOR	Bennet Langlotz

Payment Information

PAYMENT METHOD	PAYMENT TRANSACTION ID	PAYMENT AUTHORIZED BY
CARD / 2251	**E20251FC40476939**	**Russell Crawford**

PRE-AUTHORIZED ACCOUNT	PRE-AUTHORIZED CATEGORY
500493	**37 CFR 1.16 (National application filing, search, and examination fees); 37 CFR 1.17 (Patent application and reexamination processing fees); 37 CFR 1.19 (Document supply fees); 37 CFR 1.20 (Post Issuance fees); 37 CFR 1.21 (Miscellaneous fees and charges)**

FEE CODE	DESCRIPTION	ITEM PRICE($)	QUANTITY	ITEM TOTAL($)
2501	UTILITY ISSUE FEE	480.00	1	480.00
			TOTAL AMOUNT:	**$480.00**

This Acknowledgement Receipt evidences receipt on the noted date by the USPTO of the indicated documents, characterized by the applicant, and including page counts, where applicable. It serves as evidence of receipt similar to a Post Card, as described in MPEP 503.

New Applications Under 35 U.S.C. 111

If a new application is being filed and the application includes the necessary components for filing date (see 37 CFR 1.53(b)-(d) and MPEP 506), a Filing Receipt (37 CFR 1.54) will be issued in due course and the date shown on this Acknowledgement

Receipt will establish the filing date of the application

National Stage of an International Application under 35 U.S.C. 371

If a timely submission to enter the national stage of an international application is compliant with the conditions of 35 U.S.C. 371 and other applicable requirements a Form PCT/DO/EO/903 indicating acceptance of the application as a national stage submission under 35 U.S.C. 371 will be issued in addition to the Filing Receipt, in due course.

New International Application Filed with the USPTO as a Receiving Office

If a new international application is being filed and the international application includes the necessary components for an international filing date (see PCT Article 11 and MPEP 1810), a Notification of the International Application Number and of the International Filing Date (Form PCT/RO/105) will be issued in due course, subject to prescriptions concerning national security, and the date shown on this Acknowledgement Receipt will establish the international filing date of the application.

UNITED STATES
PATENT AND TRADEMARK OFFICE

P.O. Box 1450
Alexandria, VA 22313 - 1450
www.uspto.gov

ELECTRONIC ACKNOWLEDGEMENT RECEIPT

APPLICATION #	RECEIPT DATE / TIME	ATTORNEY DOCKET #
18/928,135	**01/16/2025 12:40:23 PM Z ET**	**BKL-11C5**

Title of Invention

VEHICLE GEAR SELECTION CONTROL

Application Information

APPLICATION TYPE	Utility - Nonprovisional Application under 35 USC 111(a)	PATENT #	-
CONFIRMATION #	1124	FILED BY	Russell Crawford
PATENT CENTER #	68771736	FILING DATE	10/27/2024
CUSTOMER #	25917	FIRST NAMED INVENTOR	Bennet Langlotz
CORRESPONDENCE ADDRESS	-	AUTHORIZED BY	Bennet Langlotz

Documents

TOTAL DOCUMENTS: 1

DOCUMENT	PAGES	DESCRIPTION	SIZE (KB)
BKL-11C5_Signed_Issue_Fee_Transmittal.pdf	1	Issue Fee Payment (PTO-85B)	1666 KB

Digest

DOCUMENT	MESSAGE DIGEST(SHA-512)
BKL-11C5_Signed_Issue_Fee_Transmittal.pdf	69A92C30EE4826BDED15EF7495141EA88FFEFEC49FCB48BB66CD10457260117CB955B2BE30DDF430C6C4CAD41AFD7F05695618280A53E59DD744171846E43029

This Acknowledgement Receipt evidences receipt on the noted date by the USPTO of the indicated documents, characterized by the applicant, and including page counts, where applicable. It serves as evidence of receipt similar to a Post Card, as described in MPEP 503.

New Applications Under 35 U.S.C. 111

If a new application is being filed and the application includes the necessary components for filing date (see 37 CFR 1.53(b)-(d) and MPEP 506), a Filing Receipt (37 CFR 1.54) will be issued in due course and the date shown on this Acknowledgement Receipt will establish the filing date of the application

National Stage of an International Application under 35 U.S.C. 371

If a timely submission to enter the national stage of an international application is compliant with the conditions of 35 U.S.C. 371 and other applicable requirements a Form PCT/DO/EO/903 indicating acceptance of the application as a national stage submission under 35 U.S.C. 371 will be issued in addition to the Filing Receipt, in due course.

New International Application Filed with the USPTO as a Receiving Office

If a new international application is being filed and the international application includes the necessary components for an international filing date (see PCT Article 11 and MPEP 1810), a Notification of the International Application Number and of the International Filing Date (Form PCT/RO/105) will be issued in due course, subject to prescriptions concerning national security, and the date shown on this Acknowledgement Receipt will establish the international filing date of the application.

PART B - FEE(S) TRANSMITTAL

Complete and send this form, together with applicable fee(s), by mail or fax, or via the USPTO patent electronic filing system.

By mail, send to: Mail Stop ISSUE FEE
Commissioner for Patents
P.O. Box 1450
Alexandria, Virginia 22313-1450

By fax, send to: (571)-273-2885

INSTRUCTIONS: This form should be used for transmitting the ISSUE FEE and PUBLICATION FEE (if required). Blocks 1 through 5 should be completed where appropriate. All further correspondence will be mailed to the current correspondence address as indicated unless corrected below or directed otherwise in Block 1, by (a) specifying a new correspondence address; and/or (b) indicating a separate "FEE ADDRESS" for maintenance fee notifications. **Because electronic patent issuance may occur shortly after issue fee payment, any desired continuing application should preferably be filed prior to payment of this issue fee in order not to jeopardize copendency.**

CURRENT CORRESPONDENCE ADDRESS (Note: Use Block 1 for any change of address)

25917 7590 01/15/2025
LANGLOTZ PATENT & TRADEMARK WORKS, LLC
PO BOX 660675 #37585
Dallas, TX 75266-0675

Note: A certificate of mailing can only be used for domestic mailings of the Fee(s) Transmittal. This certificate cannot be used for any other accompanying papers. Each additional paper, such as an assignment or formal drawing, must have its own certificate of mailing or transmission.

Certificate of Mailing or Transmission

I hereby certify that this Fee(s) Transmittal is being deposited with the United States Postal Service with sufficient postage for first class mail in an envelope addressed to the Mail Stop ISSUE FEE address above, or being transmitted to the USPTO via the USPTO patent electronic filing system or by facsimile to (571) 273-2885, on the date below.

Russell D. Crawford	(Typed or printed name)
/Russell D. Crawford/	(Signature)
1/16/2025	(Date)

APPLICATION NO.	FILING DATE	FIRST NAMED INVENTOR	ATTORNEY DOCKET NO.	CONFIRMATION NO.
18/928,135	10/27/2024	Bennet Langlotz	BKL-11C5	1124

TITLE OF INVENTION: VEHICLE GEAR SELECTION CONTROL

APPLN. TYPE	ENTITY STATUS	ISSUE FEE DUE	PUBLICATION FEE DUE	PREV. PAID ISSUE FEE	TOTAL FEE(S) DUE	DATE DUE
nonprovisional	SMALL	$480	$0.00	$0.00	$480	04/15/2025

EXAMINER	ART UNIT	CLASS-SUBCLASS
YOUNG, EDWIN	3655	701-041000

1. Change of correspondence address or indication of "Fee Address" (37 CFR 1.363).

☐ Change of correspondence address (or Change of Correspondence Address form PTO/AIA/122 or PTO/SB/122) attached.

☐ "Fee Address" indication (or "Fee Address" Indication form PTO/AIA/47 or PTO/SB/47; Rev 03-02 or more recent) attached. **Use of a Customer Number is required.**

2. For printing on the patent front page, list
(1) The names of up to 3 registered patent attorneys or agents OR, alternatively,
(2) The name of a single firm (having as a member a registered attorney or agent) and the names of up to 2 registered patent attorneys or agents. If no name is listed, no name will be printed.

1 Bennet K. Langlotz
2 Langlotz Patent & Trademark Works, LLC
3

3. ASSIGNEE NAME AND RESIDENCE DATA TO BE PRINTED ON THE PATENT (print or type)

PLEASE NOTE: Unless an assignee is identified below, no assignee data will appear on the patent. If an assignee is identified below, the document must have been previously recorded, or filed for recordation, as set forth in 37 CFR 3.11 and 37 CFR 3.81(a). Completion of this form is NOT a substitute for filing an assignment.

(A) NAME OF ASSIGNEE: BULLETPROOF PROPERTY MANAGEMENT, LLC
(B) RESIDENCE: (CITY and STATE OR COUNTRY): Cheyenne, WY

Please check the appropriate assignee category or categories (will not be printed on the patent) : ☐ Individual ☑ Corporation or other private group entity ☐ Government

4a. Fees submitted: ☑ Issue Fee ☐ Publication Fee (if required)

4b. Method of Payment: *(Please first reapply any previously paid fee shown above)*

☑ Electronic Payment via the USPTO patent electronic filing system ☐ Enclosed check ☐ Non-electronic payment by credit card (Attach form PTO-2038)

☑ The Director is hereby authorized to charge the required fee(s), any deficiency, or credit any overpayment to Deposit Account No. 500493

5. **Change in Entity Status** (from status indicated above)

☐ Applicant certifying micro entity status. See 37 CFR 1.29

☐ Applicant asserting small entity status. See 37 CFR 1.27

☐ Applicant changing to regular undiscounted fee status.

NOTE: Absent a valid certification of Micro Entity Status (see forms PTO/SB/15A and 15B), issue fee payment in the micro entity amount will not be accepted at the risk of application abandonment.

NOTE: If the application was previously under micro entity status, checking this box will be taken to be a notification of loss of entitlement to micro entity status.

NOTE: Checking this box will be taken to be a notification of loss of entitlement to small or micro entity status, as applicable.

NOTE: This form must be signed in accordance with 37 CFR 1.31 and 1.33. See 37 CFR 1.4 for signature requirements and certifications.

Authorized Signature /bennet langlotz/ Date 1-16-2025

Typed or printed name Bennet Langlotz Registration No. 35,928

UNITED STATES PATENT AND TRADEMARK OFFICE

UNITED STATES DEPARTMENT OF COMMERCE
United States Patent and Trademark Office
Address: COMMISSIONER FOR PATENTS
P.O. Box 1450
Alexandria, Virginia 22313-1450
www.uspto.gov

APPLICATION NO.	ISSUE DATE	PATENT NO.	ATTORNEY DOCKET NO.	CONFIRMATION NO.
18/928,135	02/25/2025	12233871	BKL-11C5	1124

25917 7590 02/05/2025
LANGLOTZ PATENT & TRADEMARK WORKS, LLC
PO BOX 660675 #37585
Dallas, TX 75266-0675

ISSUE NOTIFICATION

The projected patent number and issue date are specified above. The patent will issue electronically. The electronically issued patent is the official patent grant pursuant to 35 U.S.C. § 153. The patent may be accessed on or after the issue date through Patent Center at https://patentcenter.uspto.gov/. The patent will be available in both the public and the private sides of Patent Center. Further assistance in electronically accessing the patent, or about Patent Center, is available by calling the Patent Electronic Business Center at 1-888-217-9197.

The USPTO is implementing electronic patent issuance with a transition period, during which period the USPTO will mail a ceremonial paper copy of the electronic patent grant to the correspondence address of record. Additional copies of the patent (i.e., certified and presentation copies) may be ordered for a fee from the USPTO's Certified Copy Center at https://certifiedcopycenter.uspto.gov/index.html. The Certified Copy Center may be reached at (800)972-6382.

Determination of Patent Term Adjustment under 35 U.S.C. 154 (b)
(application filed on or after May 29, 2000)

The Patent Term Adjustment is 0 day(s). Any patent to issue from the above-identified application will include an indication of the adjustment on the front page.

If a Continued Prosecution Application (CPA) was filed in the above-identified application, the filing date that determines Patent Term Adjustment is the filing date of the most recent CPA.

Applicant will be able to obtain more detailed information by accessing the Patent Center (https://patentcenter.uspto.gov).

Any questions regarding the Patent Term Extension or Adjustment determination should be directed to the Office of Patent Legal Administration at (571)-272-7702. Questions relating to issue and publication fee payments should be directed to the Application Assistance Unit (AAU) of the Office of Patents Stakeholder Experience (OPSE), Stakeholder Support Division (SSD) at (571)-272-4200.

IR103 (Rev. 10/09)

INVENTOR(s) (Please see PATENT CENTER site https://patentcenter.uspto.gov for additional inventors):

Bennet Langlotz, Dallas, TX;

APPLICANT(s) (Please see PATENT CENTER site https://patentcenter.uspto.gov for additional applicants):

Bulletproof Property Management, LLC, Cheyenne, WY

The United States represents the largest, most dynamic marketplace in the world and is an unparalleled location for business investment, innovation, and commercialization of new technologies. The USA offers tremendous resources and advantages for those who invest and manufacture goods here. Through SelectUSA, our nation works to encourage and facilitate business investment. To learn more about why the USA is the best country in the world to develop technology, manufacture products, and grow your business, visit SelectUSA.gov.

UNITED STATES PATENT AND TRADEMARK OFFICE

UNITED STATES DEPARTMENT OF COMMERCE
United States Patent and Trademark Office
Address: COMMISSIONER FOR PATENTS
P.O. Box 1450
Alexandria, Virginia 22313-1450
www.uspto.gov

APPLICATION NUMBER	FILING OR 371(C) DATE	FIRST NAMED APPLICANT	ATTY. DOCKET NO./TITLE
18/928,135	10/27/2024	Bennet Langlotz	BKL-11C5

CONFIRMATION NO. 1124

25917
LANGLOTZ PATENT & TRADEMARK WORKS, LLC
PO BOX 660675 #37585
Dallas, TX 75266-0675

PUBLICATION NOTICE

OC000000084052191

Date Mailed: 02/06/2025

Title:VEHICLE GEAR SELECTION CONTROL

Publication No.US-2025-0042402-A1
Publication Date:02/06/2025

NOTICE OF PUBLICATION OF APPLICATION

The above-identified application will be electronically published as a patent application publication pursuant to 37 CFR 1.211, et seq. The patent application publication number and publication date are set forth above.

The publication may be viewed using the USPTO's publicly available Searchable Databases via the Patent Public Search tool at www.uspto.gov. The direct link to access the Patent Public Search tool is currently https://ppubs.uspto.gov/pubwebapp/static/pages/ppubsbasic.html.

The publication process established by the Office does not provide for mailing a copy of the publication to applicant. A copy of the publication may be obtained from the Office upon payment of the appropriate fee set forth in 37 CFR 1.19(a)(1). Orders for copies of patent application publications are handled by the USPTO's Public Records Division. The Public Records Division can be reached by telephone at (571) 272-3150 or (800) 972-6382, by facsimile at (571) 273-3250, by mail addressed to the United States Patent and Trademark Office, Public Records Division, Alexandria, VA 22313-1450 or via the Internet.

In addition, information on the status of the application, including the mailing date of Office actions and the dates of receipt of correspondence filed in the Office, may also be accessed via the Internet through Patent Center, the USPTO's electronic patent application filing and management system. The direct link to access this status information is currently https://patentcenter.uspto.gov/. Prior to publication, such status information is confidential and may only be obtained by applicant using the private side of Patent Center.

Further assistance in electronically accessing the publication, or about Patent Center, is available by calling the Patent Electronic Business Center at 1-866-217-9197.

Office of Data Managment, Application Assistance Unit (571) 272-4000, or (571) 272-4200, or 1-888-786-0101

UNITED STATES PATENT AND TRADEMARK OFFICE

UNITED STATES DEPARTMENT OF COMMERCE
United States Patent and Trademark Office
Address: COMMISSIONER FOR PATENTS
P.O. Box 1450
Alexandria, Virginia 22313-1450
www.uspto.gov

APPLICATION NO.	FILING DATE	FIRST NAMED INVENTOR	ATTORNEY DOCKET NO.	CONFIRMATION NO.
18/928,135	10/27/2024	Bennet Langlotz	BKL-11C5	1124

25917 7590 02/25/2025
LANGLOTZ PATENT & TRADEMARK WORKS, LLC
PO BOX 660675 #37585
Dallas, TX 75266-0675

EXAMINER
YOUNG, EDWIN

ART UNIT	PAPER NUMBER
3655	

NOTIFICATION DATE	DELIVERY MODE
02/25/2025	ELECTRONIC

Please find below and/or attached an Office communication concerning this application or proceeding.

The time period for reply, if any, is set in the attached communication.

Notice of the Office communication was sent electronically on above-indicated "Notification Date" to the following e-mail address(es):

pair@langlotz.com

PTOL-90A (Rev. 04/07)

APPLICATION NO.	ISSUE DATE	PATENT NO.
18/928,135	25-Feb-2025	12233871

LANGLOTZ PATENT & TRADEMARK WORKS, LLC
PO BOX 660675 #37585
Dallas, TX 75266-0675

EGRANT NOTIFICATION

Your electronic patent grant (eGrant) is now available, which can be accessed via Patent Center at https://patentcenter.uspto.gov

The electronic patent grant is the official patent grant under 35 U.S.C. 153. For more information, please visit https://www.uspto.gov/electronicgrants