**IN THE UNITED STATES DISTRICT COURT**
**FOR THE NORTHERN DISTRICT OF ILLINOIS**
**EASTERN DIVISION**

| | |
|---|---|
| MILWAUKEE ELECTRIC TOOL CORPORATION,<br><br>Plaintiff,<br><br>v.<br><br>KLEIN TOOLS, INC.,<br><br>Defendant. | Case No. 1:25-cv-04689-JJT<br><br>**JURY TRIAL DEMAND** |

**KLEIN TOOLS' LOCAL PATENT RULE 2.3 INITIAL**
**NON-INFRINGEMENT, UNENFORCEABILTY, AND INVALIDITY CONTENTIONS**

## I. **Introduction**

Pursuant to LPR. 2.3 and the Scheduling Order (Dkt. 28), Defendant Klein Tools, Inc. ("Klein Tools"), by its attorneys, submits these Initial Invalidity, Non-Infringement, and Unenforceability Contentions ("Initial Contentions") against U.S. Patent Nos. 11,656,067 (the "'067 patent") and 11,857,064 (the "'064 patent") (collectively the "Asserted Patents") in connection with the above-referenced action, and in response to Milwaukee Initial Infringement Contentions asserting claim 1 of the '067 patent and claims 1 and 16 of the '064 patent ("Asserted Claims").[1] The citation of prior art herein and the accompanying exhibits are not intended to reflect Klein Tools' claim construction contentions, which will be disclosed in due course in accordance with the Scheduling Order and may instead reflect Milwaukee's infringement contentions.

Klein Tools' Initial Contentions reflect Klein Tools' knowledge as of this date in the present action. Klein Tools reserves the right, to the extent permitted by the Court and the applicable statutes and rules, including but not limited to the Court's Local Patent Rules, to modify and/or supplement the Initial Contentions in response to learning additional prior art and/or information regarding prior art, as well as any modification or supplementation of Milwaukee's Initial Infringement Contentions.

The accused Klein Tools products do not infringe any Asserted Claim for at least the reasons explained below and in the attached Appendices. The identification of evidence of non-infringement, and the identification of failures in Milwaukee's infringement contentions, is not intended to be exhaustive, as discovery has only just begun, with initial responses and objections to Milwaukee's first set of discovery request only just served on August 15, 2025. There

[1] Pursuant to LPR 2.4, Klein Tools serves an accompanying document production, which it incorporates herein. *See* KLEIN-MTNDIL_00006807– KLEIN-MTNDIL_00007718.

therefore may be additional evidence supporting Klein Tools' non-infringement contentions that will develop as discovery proceeds.

Persons having ordinary skill in the art ("POSAs") generally may view an item of prior art in the context of other publications, literature, products, and understanding. The cited portions of prior art references identified herein are exemplary, and Klein Tools may rely on the entirety of the prior art references, including un-cited portions of those references, and on other publications and expert testimony shedding light on the references, including as aids in understanding and interpreting the cited portions, as providing context thereto and as additional evidence that the prior art discloses a claim limitation.

Klein Tools may also rely on documents, products, testimony, and other evidence to establish bases for and motivations to make combinations of certain cited references that render the Asserted Claim(s) obvious. Klein Tools may rely upon corroborating documents, products, testimony, and other evidence including materials obtained through further investigation and third-party discovery of the prior art identified herein, that describes the invalidating features identified in these contentions; evidence of the state of the art in the relevant time period (irrespective of whether such references themselves qualify as prior art to the Asserted Patents), including prior art listed on the face of the asserted patents and/or disclosed in the specification ("Admitted Prior Art"); fact witness testimony; and/or expert testimony to provide context to or aid in understanding the cited portions of the identified prior art.

The references cited herein disclose the elements of the Asserted Claims explicitly or inherently, and/or they may be relied upon to show the state of the art in the relevant time frame. To the extent the attached claim charts cite to a single reference for each element or limitation of an asserted claim, Klein Tools contends that such reference anticipates that claim and/or renders

that claim obvious in view of the state of the art and/or knowledge of a person of ordinary skill in the art at the relevant timeframe. In addition, to the extent that the attached claim charts cite to additional references, Klein Tools contends, in addition and/or in the alternative, that the asserted claim is rendered obvious for the reasons set forth in the attached charts. To the extent suggested obviousness combinations are included in the attached claim charts, they are provided in addition to and/or in the alternative to Klein Tools' anticipation contentions and are not to be construed to suggest that any reference included in the combinations is not by itself anticipatory. Any such obviousness combinations are also provided in addition to the obviousness combinations Klein Tools contends render the Asserted Claims Obvious in § III below.

For purposes of these Initial Contentions, Klein Tools identifies prior art references and provides element-by-element claim charts based, in part, on the apparent claim constructions advanced by Milwaukee in its Initial Infringement Contentions, to the extent Klein Tools understands them in light of the numerous deficiencies in Milwaukee's Initial Infringement Contentions. Nothing stated herein shall be treated as an admission or suggestion that Klein Tools agrees with Milwaukee regarding either the scope of any of the asserted claims or the claim constructions advanced in the Initial Infringement Contentions. Moreover, nothing in these Initial Invalidity Contentions shall be treated as an admission that any of Klein Tools' accused products meets any limitation of the claims. To the extent Klein Tools determines that a different meaning is appropriate for any claim term, Klein Tools will assert that meaning in connection with the claim construction proceedings, and further reserve the right to update these Initial Contentions as a result of the claim construction proceedings, or any other disclosure or alteration of the meaning of claim terms. Klein Tools further reserves the right to interpret these terms differently over the course of the litigation, and do not adopt any interpretations impliedly

## III. **The Asserted Claims are Invalid Under 35 U.S.C. §§ 102 and 103**

Pursuant to LPR 2.3(b)(1)–(3), Klein Tools identifies the following prior art references and systems that anticipate and/or render obvious the Asserted Claims.

In these Invalidity Contentions, Klein Tools provides the full identity of each item of prior art, including: (1) each patent or patent application by its number, country of origin, and date of issue; (2) each non-patent publication by its title, date of publication, and, where feasible, author and publisher; (3) each prior art item/system offered for sale or publicly used or known, the date the offer or use took place or the information became known, and the identity of the person or entity which made the use or which made and received the offer, or the person or entity which made the information known or to whom it was made known. Pursuant to LPR 2.3(b)(2)–(3), Klein Tools also provides Appendices C and D, including parts C1–C13 and D1–D12, respectively, which incorporated herein by reference. These exhibits comprise charts identifying where specifically in each item of prior art each element of each asserted claim is found and/or rendered obvious.

Klein Tools reserves the right to rely upon additional evidence of invalidity obtained in the future, including, for example, from third parties.

### D. The ’067 Patent

#### (i) Scope and Content of the Prior Art

Certain prior art references are described in further detail below to show the state of the art in the relevant time frame. This prior art identification is only exemplary and is not in any way intended to limit the scope of what one of ordinary skill in the art would have understood at the relevant time period of the alleged inventions or the breadth of the state of the art to which the alleged inventions of the Asserted Patents relate. Klein Tools reserves the right to rely upon additional prior art, information, testimony, and/or knowledge to demonstrate what one of

ordinary skill in the art would have understood prior to the date of the alleged invention of the Asserted Claim.

(1) Admitted Prior Art

The ’067 patent provides the following statements, which include certain admissions regarding the state of the art. Apart from prior art references, a “statement in the patent that something is in the prior art is binding on the applicant and patentee for determinations of anticipation and obviousness.” *PharmaStem Therapeutics, Inc. v. ViaCell, Inc.*, 491 F.3d 1342, 1362 (Fed. Cir. 2007) (*quoting Constant v. Advanced Micro–Devices, Inc.*, 848 F.2d 1560, 1570 (Fed.Cir.1988)). Klein Tools reserves the right to rely on any of the admitted prior art and statements regarding the state of the art in the ’067 patent, including as the basis for anticipation or obviousness.

For example, the Background of the Invention section admits the following was known:

> Tape measures are measurement tools used for a variety of measurement applications, including in the building and construction trades. Some tape measures include a graduated, marked blade wound on a reel and also include a retraction system for automatically retracting the blade onto the reel. In some such tape measure designs, the retraction system is driven by a coil or spiral spring that is tensioned, storing energy as the tape is extended, and that releases energy to spin the reel, winding the blade back onto the reel such that automatic or non-manual tape retraction is provided. In some other tape measure designs, retraction of the tape is controlled via a manual crank, and such tape measure blades tend to have a long length.

*See, e.g.*, ’067 patent at 1:25-37.

The ’067 patent further admits that the following was known regarding prior art tape measures:

TABLE 1

| Tape Design | Flat Width (mm) | Steel Thickness (mm) | Total Thickness (mm) | Angle-Laser (deg) | Curved Height-Laser (mm) | Curved Width-Laser (mm) | Droop @ 10 ft (in) | Standout (in) |
|---|---|---|---|---|---|---|---|---|
| A | 30 | 0.11 | 0.18 | 57.39 | 8.8515 | 21.85 | 22-25 | 156-160 |
| B | 30 | 0.11 | 0.18 | 62.71 | 9.074 | 21.5 | 20-23 | 160-162 |
| C | 30 | 0.11 | 0.36 | 49.68 | 9.348 | 21.15 | 23-25 | 159-164 |
| D | 27 | 0.11 | 0.36 | 72.42 | 7.5385 | 21.151 | 25-27 | 133-135 |
| Milwaukee Electric Tool Prod. No. 48-22-7116 | 27 | 0.13 | 0.19 | 96.26 | 5.904 | 23.4 | N/A | 108-112 |
| Milwaukee Electric Tool Prod. No. 48-22-7135 | 27 | 0.12 | 0.19 | 91.12 | 6.281 | 22.8 | N/A | 110-114 |
| Milwaukee Electric Tool Prod. No. 48-22-7526 | 32 | 0.13 | 0.18 | 58.48 | 8.986 | 23.9 | 34-36 | 142-146 |
| Prior Art Tape No. 1 | 31.75 | 0.13 | 0.18 | 62 | 9.1835 | 23.651 | 31-32 | 145 avg |
| Prior Art Tape No. 2 | 31.75 | 0.13 | 0.22 | 64 | 9.166 | 23.601 | 28-29 | 149 avg |
| Prior Art Tape No. 3 | 31.75 | 0.13 | 0.18 | 88 | 7.9675 | 26.05 | 32-33 | 138 avg |

TABLE 2

| Tape Design | Ratio-Height/Flat Width | Ratio-Height/Steel Thickness | Ratio-Curved Width/Flat Width | Ratio-Angle/Flat Width |
|---|---|---|---|---|
| A | 0.29505 | 80.46818182 | 0.728333333 | 1.913 |
| B | 0.302466667 | 82.49090909 | 0.716666667 | 2.0903333 |
| C | 0.3116 | 84.98181818 | 0.705 | 1.656 |
| D | 0.279203704 | 68.53181818 | 0.78337037 | 2.6822222 |
| Milwaukee Electric Tool Prod. No. 48-22-7116 | 0.218666667 | 45.41538462 | 0.866666667 | 3.5651852 |
| Milwaukee Electric Tool Prod. No. 48-22-7135 | 0.23262963 | 52.34166667 | 0.844444444 | 3.3748148 |
| Milwaukee Electric Tool Prod. No. 48-22-7526 | 0.2808125 | 69.12307692 | 0.746875 | 1.8275 |
| Prior Art Tape No. 1 @ 12 ft. | 0.289244094 | 70.64230769 | 0.744913386 | 1.9625197 |
| Prior Art Tape No. 2 @ 12 ft. | 0.288692913 | 70.50769231 | 0.743338583 | 2.0179528 |
| Prior Art Tape No. 3 @ 12 ft. | 0.250944882 | 61.28846154 | 0.820472441 | 2.7672441 |

TABLE 3

| Design Parameter | Prior Art 1 (CAWB 78 deg) | Prior Art 2 (CAWB 55deg) | Prototype 1 (35 FW Deep) | Prototype 2 (38 FW Deep) | Prototype 3 (35 FW) | Prototype 4 (38 FW) | Prototype 5 (35 Super Deep) | Prototype 6 (38 Super Deep) |
|---|---|---|---|---|---|---|---|---|
| Thickness (mm) | 0.13 | 0.13 | 0.13 | 0.13 | 0.13 | 0.13 | 0.13 | 0.13 |
| Flat Width (mm) | 32 | 32 | 35 | 38 | 35 | 38 | 35 | 38 |
| arc angle center (deg) | 102.23 | 108.916 | 110 | 112.5 | 102 | 104 | 108.916 | 108.916 |
| Radius at center | 11.57 | 10.37 | 10.8 | 11.4 | 13 | 16.1 | 10.37 | 10.37 |
| Radius at edges | 76.33 | 22.77 | 23.35 | 23.35 | 30 | 50 | 22.77 | 22.77 |
| Center arc length | 20.644 | 19.713 | 20.735 | 22.384 | 23.143 | 29.224 | 19.713 | 19.713 |
| Leg arc length | 5.68 | 6.14 | 7.13 | 7.81 | 5.93 | 4.39 | 7.64 | 9.14 |
| Curved Height Total | 8.86 | 9.76 | 10.98 | 12.16 | 9.76 | 9.76 | 11.18 | 12.64 |
| Curved Width Total | 24.81 | 22.59 | 23.98 | 25.32 | 26.71 | 30.47 | 23.53 | 24.28 |
| Ratio Curved Width to Flat Width | 0.7753125 | 0.7059375 | 0.685142857 | 0.666315789 | 0.763142857 | 0.801842105 | 0.672285714 | 0.638947368 |
| Ratio Height Width to Flat Width | 0.276875 | 0.305 | 0.313714286 | 0.32 | 0.278857143 | 0.256842105 | 0.319428571 | 0.332631579 |
| Total Energy per 1 mm Length (N * mm) @ r31 (approx 10 ft mark) | 3.7112 | 4.7072 | 4.7080 | 4.7094 | 3.6539 | 3.0517 | 4.8817 | 5.0562 |

*See, e.g.*, ’067 patent at Tables 1–3; *see also id*. at 46:17:63, Figs. 7–13.

(2) Prior Art Patents and Publications

The following references are prior art to the ’067 patent. These prior art references anticipate or, alone or in combination, render obvious the Asserted Claim of the ’067 patent. Klein Tools reserves the right to rely on additional references and documents not listed or described herein as evidence of the scope and content of the prior art, the knowledge of the person having ordinary skill in the art, to demonstrate the motivation to combine prior art references or any reasonable expectation of success, and to rebut any evidence of validity raised by Milwaukee.

| Patent / Publication No. | Filing/Publication/ Issue Date | Inventor (et al.) |
|---|---|---|
| US 7,096,596 | Issued: Aug. 29, 2006 | *Hernandez ('596)* |
| WO 2007/044004 | Published: Mar. 15, 2007 | *Hernandez ('004)* |
| US 6,243,964 | Issued: Jun. 12, 2001 | *Murray ('964)* |
| US 6,282,808 | Issued: Sep. 4, 2001 | *Murray ('808)* |
| US 6,324,769 | Issued: Dec. 4, 2001 | *Murray ('769)* |
| US 6,804,899 | Oct. 19, 2004 | *Murray ('899)* |
| US 7,395,608 | Issued: Jun. 9, 2008 | *Liao ('608)* |
| CN 2869762Y | Issued: Feb. 14, 2007 | *Zhongyan* |

(3) Prior Art Systems

The below table summarizes the prior art systems that Klein Tools asserts as anticipating and/or rendering obvious the Asserted Claim of the '067 patent:

| Prior Art System | Date of Offer for Sale, Sale, and/or Public Use[3] |
|---|---|
| Stanley FMHT33502 ("Stanley") | Offered and/or sold by Stanley and/or retailers (e.g., Lowes), before July 23, 2017[4] |
| DeWalt DWHT36225 ("DeWalt") | Offered and/or sold by DeWalt and/or retailers (e.g., Lowes), before March 2, 2017[5] |

[3] The dates listed represent Klein Tools' current understanding of the date at least upon which the first offer for sale, sale, and/or public use occurred. Klein Tools has sought discovery from Milwaukee on these dates and intends to seek discovery from third parties on these dates.

[4] *E.g.*, KLEIN-MTNDIL_00007718.

[5] *E.g.*, KLEIN-MTNDIL_00007683; KLEIN-MTNDIL_00007684; KLEIN-MTNDIL_00007661; KLEIN-MTNDIL_00007665.

(ii) Anticipation

The following prior art anticipates the asserted claim of the ’067 patent under 35 U.S.C. § 102, at least under Milwaukee’s apparent infringement theory and apparent construction of the claims.

| **Anticipatory Prior Art** |
|---|
| Hernandez (’596) |
| Hernandez (’004) |
| Murray (’808) |
| Murray (’964) |
| Murray (’899) |
| Murray (’769) |
| Liao (’608) |
| “Prior Art Tape No. 1” (Admitted Prior Art) |
| “Prior Art Tape No. 2” (Admitted Prior Art) |
| “Prior Art Tape No. 3” (Admitted Prior Art) |
| Stanley |
| DeWalt |

(iii) Obviousness

The following prior art renders obvious the asserted claim of the ’067 patent under 35 U.S.C. § 103, at least under Milwaukee’s apparent infringement theory and apparent construction of the claims, in combination with: (i) the knowledge of a POSA; (ii) other prior art patents and publications identified below; and/or (iii) the Prior Art Systems identified in § III(B)(ii).

At this stage, Klein Tools intends to rely on all potential combinations of all references identified in its contentions. *See* LPR 2.3; *Velocity Patent LLC v. FCA US, LLC*, No. 13-

cv08419, at *1-2 (N.D. Ill. Oct. 3, 2017) ("There is no Local Rule that limits the number of combinations a defendant can rely on at this stage."). Klein Tools identifies the following Representative Combinations and, as stated above, at this stage, expressly reserves the right to rely on all potential combinations of all references identified in its contentions. For example, Klein Tools expressly reserves the right to rely on all Representative Combinations below in further view of the Knowledge of a POSA.

| Representative Combinations | Asserted Claim |
|---|---|
| Hernandez ('596) | 1 |
| Hernandez ('004) | 1 |
| Murray ('808) | 1 |
| Murray ('964) | 1 |
| Murray ('899) | 1 |
| Murray ('769) | 1 |
| Liao ('608) | 1 |
| "Prior Art Tape No. 1" (Admitted Prior Art) | 1 |
| "Prior Art Tape No. 2" (Admitted Prior Art) | 1 |
| "Prior Art Tape No. 3" (Admitted Prior Art) | 1 |
| Hernandez ('596)[6] in View of Murray ('808)[7] | 1 |
| Hernandez ('596) in View of Liao | 1 |

[6] A reference to Hernandez ('596) in any of the above combinations can be substituted by the Hernandez ('004) reference because the specifications are substantially the same in relevant portion.

[7] A reference to Murray ('808) in any of the above combinations can be substituted by any of the other Murray references (Murray ('964), Murray ('899), and Murray ('769)) because the specifications are substantially the same in relevant portion.

| Representative Combinations | Asserted Claim |
|---|---|
| Hernandez (’596) in View of CN 2869762Y | 1 |
| Murray (’808) in View of Liao | 1 |
| Murray (’808) in View of CN 2869762Y | 1 |
| CN 2869762Y in View of Murray (’808) and/or Hernandez (’596) | 1 |
| CN 2869762Y in View of “Prior Art Tape No. 1” (Admitted Prior Art) | 1 |
| CN 2869762Y in View of “Prior Art Tape No. 2” (Admitted Prior Art) | 1 |
| CN 2869762Y in View of “Prior Art Tape No. 3” (Admitted Prior Art) | 1 |
| Prior Art Tape No. 1 in View of Hernandez (’596) | 1 |
| Prior Art Tape No. 2 in View of Hernandez (’596) | 1 |
| Prior Art Tape No. 3 in View of Hernandez (’596) | 1 |
| Prior Art Tape No. 1 in View of Murray (’808) | 1 |
| Prior Art Tape No. 2 in View of Murray (’808) | 1 |
| Prior Art Tape No. 3 in View of Murray (’808) | 1 |
| Prior Art Tape No. 1 in View of Liao | 1 |
| Prior Art Tape No. 2 in View of Liao | 1 |
| Prior Art Tape No. 3 in View of Liao | 1 |
| Stanley in View of Hernandez (’596) | 1 |
| Stanley in View of Murray (’808) | 1 |
| Stanley in View of Liao | 1 |

| Representative Combinations | Asserted Claim |
|---|---|
| Stanley in View of CN 2869762Y | 1 |
| Stanley in View of Hernandez ('596) | 1 |
| Stanley in View of Murray ('808) | 1 |
| Stanley in View of Liao | 1 |
| Stanley in View of CN 2869762Y | 1 |
| DeWalt in View of Hernandez ('596) | 1 |
| DeWalt in View of Murray ('808) | 1 |
| DeWalt in View of Liao | 1 |
| DeWalt in View of CN 2869762Y | 1 |
| DeWalt in View of Hernandez ('596) | 1 |
| DeWalt in View of Murray ('808) | 1 |
| DeWalt in View of Liao | 1 |
| DeWalt in View of CN 2869762Y | 1 |

Klein Tools further contends that no showing of an express teaching, suggestion, or motivation to combine prior art is required to combine the references disclosed above and in the attached charts, as each combination of art would have no unexpected results, and at most would simply represent a known alternative to one of skill in the art. *See KSR Int'l Co. v. Teleflex, Inc.,* 127 S. Ct. 1727, 1739-40 (2007) (rejecting a "rigid" application of the teaching, suggestion, or motivation to combine test, instead espousing an "expansive and flexible" approach). Indeed, the Supreme Court held that a person of ordinary skill in the art is "a person of ordinary creativity, not an automaton" and "in many cases a person of ordinary skill in the art will be able to fit the teachings of multiple patents together like pieces of a puzzle." *Id.* at 1742. As the Supreme Court has explained: "[A]s progress beginning from higher levels of achievement is expected in the

normal course, the results of ordinary innovation are not the subject of exclusive rights under the patent laws. Were it otherwise patents might stifle, rather than promote, the progress of useful arts." *Id.* But, in any event, such motivation to combine comes expressly from the references themselves and the knowledge of a POSA.

One or more combinations of the prior art references identified above and in Appendix C would have been obvious because these references would have been combined using: known methods to yield predictable results; known techniques in the same way; a simple substitution of one known, equivalent element for another to obtain predictable results; and/or a teaching, suggestion, or motivation in the prior art generally. In addition, it would have been obvious to try combining the prior art references identified above and in Appendix C because there were only a finite number of predictable solutions and/or because known work in one field of endeavor prompted variations based on predictable design incentives and/or market forces either in the same field or a different one. In addition, the combination of the prior art references above and in Appendix C would have been obvious because the combination represents the known potential options with a reasonable expectation of success.

Additional evidence that there would have been a motivation to combine the prior art references identified above and in Appendix C includes the interrelated teachings of multiple prior art references; the effects of demands known to the design community or present in the marketplace; the existence of a known problem for which there was an obvious solution encompassed by the Asserted Claim; the existence of a known need or problem in the field of the endeavor at the time of the alleged invention(s); and the background knowledge that would have been possessed by a person having ordinary skill in the art.

For example, all of the references identified above with respect to the ’067 patent relate to tape measures or “hand tapes” with a particular focus on the curvature profile of the elongated blade and on achieving superior standout distance. Therefore, a POSA looking to design a tape measure with improved standout would have been motivated to combine the teachings of the above references disclosing tape measures that include different blade dimensions and techniques for achieving superior standout in order to arrive at a design with the desired feature of improved standout. A POSA would also have been motivated to combine the above references in order to improve other aspects of the tape measure, such as reducing costs of manufacture or improving durability. As such, a person of ordinary skill in the art at the time of the alleged invention would have been motivated to combine the teachings of the prior art references cited in Appendix C.

Klein Tools further incorporates by reference its charts in Appendix C in their entirety.

(iv) Secondary Considerations

Klein Tools is not aware of any applicable objective indicia of non-obviousness at this stage. For purposes of these contentions, Klein Tools does not have the burden to come forward with any alleged evidence of secondary indicia of non-obviousness. As the patent owner, Milwaukee has the burden of initially coming forward with evidence of any secondary considerations of nonobviousness that it intends to rely on. Klein Tools reserves all rights to respond to any objective indicia of non-obviousness that Milwaukee may assert. Should Milwaukee identify any objective indicia of non-obviousness, Klein Tools reserves all rights to respond to and rely upon further references not cited herein to rebut those objective indicia of non-obviousness.

**E. The ’064 Patent**

(i) Scope and Content of the Prior Art

Certain prior art references are described in further detail below to show the state of the art in the relevant time frame. This prior art identification is only exemplary and is not in any way intended to limit the scope of what one of ordinary skill in the art would have understood at the relevant time period of the alleged inventions or the breadth of the state of the art to which the alleged inventions of the Asserted Patents relate. Klein Tools reserves the right to rely upon additional prior art, information, testimony, and/or knowledge to demonstrate what one of ordinary skill in the art would have understood prior to the date of the alleged invention of the Asserted Claims.

(1) Prior Art Patents and Publications

The following references are prior art to the ’064 patent. These prior art references anticipate or, alone or in combination, render obvious one or more of the Asserted Claims. Klein Tools reserves the right to rely on additional references and documents not listed or described herein as evidence of the scope and content of the prior art, the knowledge of the person having ordinary skill in the art, to demonstrate the motivation to combine prior art references or any reasonable expectation of success, and to rebut any evidence of validity raised by Milwaukee.

| **Patent / Publication No.** | **Filing/Publication/ Issue Date** | **Inventor (et al.)** |
|---|---|---|
| US 2009/0078730 | Published: Mar. 26, 2009 | *Kuny* |
| US 5,274,885 | Issued: Jan.4, 1994 | *Hellweg* |
| AT388448B | Issued: Jun. 26, 1989 | *Glock (’448)* |
| US 6,478,202 | Nov. 12, 2002 | *Glock (’202)* |
| US 5,081,709 | Issued: Jan. 14, 1992 | *Benyo* |
| DE 9308896 | Published: Oct. 28, 1993 | *Albrecht Kind GmbH* |
| US 2010/0242239 | Published: Sep. 30, 2010 | *Engel* |

| | | |
|---|---|---|
| US 2005/0263552 | Published: Dec. 1, 2005 | *Panosian* |
| WO 2019/206441 | Published: Oct. 31, 2019;<br>Filed: Nov. 26, 2018 | *Hubbard* |
| US 7,032,791 | Issued: Apr. 25, 2006 | *Stotts* |

(2) Prior Art Systems

The following prior art systems are prior art to the ’064 patent. These prior art references anticipate or, alone or in combination, render obvious one or more of the Asserted Claims. Klein Tools reserves the right to rely on additional references and documents not listed or described herein as evidence of the scope and content of the prior art, the knowledge of the person having ordinary skill in the art, to demonstrate the motivation to combine prior art references or any reasonable expectation of success, and to rebut any evidence of validity raised by Milwaukee.

| **Prior Art System** | **Date of First Offer for Sale, Sale, and/or Public Use[8]** |
|---|---|
| ToughBuilt ClipTech System (ToughBuilt) | Offered and/or sold by ToughBuilt and/or retailers before Oct. 2016[9] |
| Tajima Safety Belt System (Tajima SBS) | Offered and/or sold by Tajima and/or retailers before Jan 17, 2019[10] |

(ii) Anticipation

The following prior art anticipates the asserted claims of the ’064 patent under 35 U.S.C. § 102, at least under Milwaukee’s apparent infringement theory and apparent construction of the claims.

---

[8] The dates listed represent Klein Tools’ current understanding of the date at least upon which the first offer for sale, sale, and/or public use occurred.

[9] *E.g.*, KLEIN-MTNDIL_00006828; KLEIN-MTNDIL_00006961.

[10] *E.g.*, https://www.youtube.com/watch?v=U914eippIuc; https://www.youtube.com/watch?v=41rHrjA_urU.

| Prior Art | Asserted Claims |
|---|---|
| Kuny | Claims 1 and 16 |
| Glock ('448) | Claim 1 |
| Glock ('202) | Claim 1 |

(iii) Obviousness

The following prior art renders obvious the asserted claims of the '064 patent under 35 U.S.C. § 103, at least under Milwaukee's apparent infringement theory and apparent construction of the claims, in combination with: (i) the knowledge of a POSA; (ii) other prior art patents and publications identified below; and/or (iii) the Prior Art Systems identified in § III(B)(ii).

At this stage, Klein Tools intends to rely on all potential combinations of all references identified in its contentions. *See* LPR 2.3; Velocity Patent LLC v. FCA US, LLC, No. 13-cv08419, at *1-2 (N.D. Ill. Oct. 3, 2017) ("There is no Local Rule that limits the number of combinations a defendant can rely on at this stage"). Klein Tools identifies the following Representative Combinations and, as stated above, at this stage, expressly reserves the right to rely on all potential combinations of all references identified in its contentions. For example, Klein Tools expressly reserves the right to rely on all Representative Combinations below in further view of the Knowledge of a POSA

| Representative Combinations | Asserted Claims |
|---|---|
| Kuny | 1, 16 |
| Glock ('448) | 1, 16 |
| Glock ('202) | 1, 16 |
| ToughBuilt | 1, 16 |
| Tijima SBS | 1, 16 |

| Representative Combinations | Asserted Claims |
|---|---|
| Kuny in View of Engel | 1, 16 |
| Kuny in View of Benyo | 1, 16 |
| Kuny in View of Panosian | 1, 16 |
| Glock (’448) in View of Engel | 1, 16 |
| Glock (’448) in View of Benyo | 1, 16 |
| Glock (’448) in View of Panosian | 1, 16 |
| Glock (’202) in View of Engel | 1, 16 |
| Glock (’202) in View of Benyo | 1, 16 |
| Glock (’202) in View of Panosian | 1, 16 |
| ToughBuilt in View of Engel | 1, 16 |
| ToughBuilt in View of Benyo | 1, 16 |
| ToughBuilt in View of Kuny | 1, 16 |
| ToughBuilt in View of Glock (’448) | 1, 16 |
| ToughBuilt in View of Glock (’202) | 1, 16 |
| ToughBuilt in View of Panosian | 1, 16 |
| ToughBuilt in View of Kuny in Further View of Engel | 1, 16 |
| ToughBuilt in View of Kuny in Further View of Benyo | 1, 16 |
| ToughBuilt in View of Glock (’448) in Further View of Engel | 1, 16 |
| ToughBuilt in View of Glock (’448) in Further View of Benyo | 1, 16 |
| ToughBuilt in View of Glock (’202) in Further View of Engel | 1, 16 |
| ToughBuilt in View of Glock (’202) in Further View of Benyo | 1, 16 |

| Representative Combinations | Asserted Claims |
|---|---|
| Tijima SBS in View of Engel | 1, 16 |
| Tijima SBS in View of Benyo | 1, 16 |
| Tijima SBS in View of Kuny | 1, 16 |
| Tijima SBS in View of Glock (’448) | 1, 16 |
| Tijima SBS in View of Glock (’202) | 1, 16 |
| Tijima SBS in View of Panosian | 1, 16 |
| Tijima SBS in View of Kuny in Further View of Engel | 1, 16 |
| Tijima SBS in View of Kuny in Further View of Benyo | 1, 16 |
| Tijima SBS in View of Glock (’448) in Further View of Engel | 1, 16 |
| Tijima SBS in View of Glock (’448) in Further View of Benyo | 1, 16 |
| Tijima SBS in View of Glock (’202) in Further View of Engel | 1, 16 |
| Tijima SBS in View of Glock (’202) in Further View of Benyo | 1, 16 |
| Panosian in View of Kuny | 1, 16 |
| Panosian in View of Glock (’448) | 1, 16 |
| Panosian in View of Glock (’202) | 1, 16 |
| Panosian in View of Benyo | 1, 16 |
| Panosian in View of Engel | 1, 16 |
| Panosian in View of Kuny in Further View of Benyo | 1, 16 |
| Panosian in View of Kuny in Further View of Engel | 1, 16 |
| Panosian in View of Glock (’448) in Further View of Benyo | 1, 16 |

| Representative Combinations | Asserted Claims |
|---|---|
| Panosian in View of Glock (’448) in Further View of Engel | 1, 16 |
| Panosian in View of Glock (’202) in Further View of Benyo | 1, 16 |
| Panosian in View of Glock (’202) in Further View of Engel | 1, 16 |
| Hubbard in View of Kuny | 1, 16 |
| Hubbard in View of Glock (’448) | 1, 16 |
| Hubbard in View of Glock (’202) | 1, 16 |
| Hubbard in View of Engel | 1, 16 |
| Hubbard in View of Benyo | 1, 16 |
| Hubbard in View of Panosian | 1, 16 |
| Hubbard in View of Panosian in Further View of Kuny | 1, 16 |
| Hubbard in View of Kuny in Further View of Engel | 1, 16 |
| Hubbard in View of Kuny in Further View of Benyo | 1, 16 |
| Hubbard in View of Glock (’448) in Further View of Engel | 1, 16 |
| Hubbard in View of Glock (’448) in Further View of Benyo | 1, 16 |
| Hubbard in View of Glock (’202) in Further View of Engel | 1, 16 |
| Hubbard in View of Glock (’448) in Further View of Benyo | 1, 16 |
| Engel in View of Kuny | 1, 16 |
| Benyo in View of Kuny | 1, 16 |
| Engel in View of Glock (’448) | 1, 16 |

| Representative Combinations | Asserted Claims |
|---|---|
| Benyo in View of Glock (’448) | 1, 16 |
| Engel in View of Glock (’202) | 1, 16 |
| Engel in View of Panosian | 1, 16 |
| Benyo in View of Glock (’448) | 1, 16 |
| Benyo in View of Panosian | 1, 16 |
| Stotts in View of Kuny | 1, 16 |
| Stotts in View of Glock (’448) | 1, 16 |
| Stotts in View of Glock (’202) | 1, 16 |
| Stotts in View of Panosian | 1, 16 |
| Stotts in View of Kuny in Further View of Engel | 1, 16 |
| Stotts in View of Kuny in Further View of Benyo | 1, 16 |
| Stotts in View of Glock (’448) in Further View of Engel | 1, 16 |
| Stotts in View of Glock (’448) in Further View of Benyo | 1, 16 |
| Stotts in View of Glock (’202) in Further View of Engel | 1, 16 |
| Stotts in View of Glock (’202) in Further View of Benyo | 1, 16 |
| Albrecht Kind GmbH in View of Kuny | 1, 16 |
| Albrecht Kind GmbH in View of Glock (’448) | 1, 16 |
| Albrecht Kind GmbH in View of Glock (’202) | 1, 16 |
| Albrecht Kind GmbH in View of Panosian | 1, 16 |
| Albrecht Kind GmbH in View of Kuny in Further View of Engel | 1, 16 |
| Albrecht Kind GmbH in View of Kuny in Further View of Benyo | 1, 16 |
| Albrecht Kind GmbH in View of Glock (’448) in Further | 1, 16 |

| Representative Combinations | Asserted Claims |
|---|---|
| View of Engel | |
| Albrecht Kind GmbH in View of Glock ('448) in Further View of Benyo | 1, 16 |
| Albrecht Kind GmbH in View of Glock ('202) in Further View of Engel | 1, 16 |
| Albrecht Kind GmbH in View of Glock ('202) in Further View of Benyo | 1, 16 |

Klein Tools further contends that no showing of an express teaching, suggestion, or motivation to combine prior art is required to combine the references disclosed above and in the attached charts, as each combination of art would have no unexpected results, and at most would simply represent a known alternative to one of skill in the art. *See KSR Int'l Co. v. Teleflex, Inc.,* 127 S. Ct. 1727, 1739-40 (2007) (rejecting a "rigid" application of the teaching, suggestion, or motivation to combine test, instead espousing an "expansive and flexible" approach). Indeed, the Supreme Court held that a person of ordinary skill in the art is "a person of ordinary creativity, not an automaton" and "in many cases a person of ordinary skill in the art will be able to fit the teachings of multiple patents together like pieces of a puzzle." *Id.* at 1742. As the Supreme Court has explained: "[A]s progress beginning from higher levels of achievement is expected in the normal course, the results of ordinary innovation are not the subject of exclusive rights under the patent laws. Were it otherwise patents might stifle, rather than promote, the progress of useful arts." *Id.* But, in any event, such motivation to combine comes expressly from the references themselves and the knowledge of a POSA.

One or more combinations of the prior art references identified above and in Appendix D would have been obvious because these references would have been combined using: known methods to yield predictable results; known techniques in the same way; a simple substitution of

one known, equivalent element for another to obtain predictable results; and/or a teaching, suggestion, or motivation in the prior art generally. In addition, it would have been obvious to try combining the prior art references identified above and in Appendix D because there were only a finite number of predictable solutions and/or because known work in one field of endeavor prompted variations based on predictable design incentives and/or market forces either in the same field or a different one. In addition, the combination of the prior art references above and in Appendix D would have been obvious because the combination represents the known potential options with a reasonable expectation of success.

Additional evidence that there would have been a motivation to combine the prior art references identified above and in Appendix D includes the interrelated teachings of multiple prior art references; the effects of demands known to the design community or present in the marketplace; the existence of a known problem for which there was an obvious solution encompassed by the Asserted Claims; the existence of a known need or problem in the field of the endeavor at the time of the alleged invention(s); and the background knowledge that would have been possessed by a person having ordinary skill in the art.

For example, all of the references identified above with respect to the ’064 patent relate to tool attachment systems to releasably couple connecting tools or holders and pouches for tools at a fixed point such as the belt of a user. Therefore, one would look to references that disclose such devices to perform these functions for ways to implement them to meet desired designs, operate more quickly, and/or reduce costs. For example, a POSA would understand that there are a number of design choices for such products, such as varying design options for how to connect, secure, and release such products. Moreover, a POSA would be motivated to look at ease of use, including ways to quickly and securely attach and disconnect the pouch. As another

example, a POSA would be motivated by ergonomics to include at least a portion of the release mechanism below the mating structure, but above the pouch. As such, a person of ordinary skill in the art at the time of the alleged invention would have been motivated to combine the teachings of the prior art references cited in Appendix D in order to arrive at their desired design with the desired features.

Klein Tools further incorporates by reference its charts in Appendix D in their entirety.

(iv) Secondary Considerations

Klein Tools is not aware of any applicable objective indicia of non-obviousness at this stage. For purposes of these contentions, Klein Tools does not have the burden to come forward with any alleged evidence of secondary indicia of non-obviousness. As the patent owner, Milwaukee has the burden of initially coming forward with evidence of any secondary considerations of nonobviousness that it intends to rely on. Klein Tools reserves all rights to respond to any objective indicia of non-obviousness that Milwaukee may assert. Should Milwaukee identify any objective indicia of non-obviousness, Klein Tools reserves all rights to respond to and rely upon further references not cited herein to rebut those objective indicia of non-obviousness.

## IV. <u>The Asserted Claims Are Invalid Under 35 U.S.C. § 112</u>

In accordance with LPR 2.3(b)(4), Klein Tools identifies grounds under which the Asserted Claims are invalid under 35 U.S.C. § 112.

### A. The Asserted Claim of the ’067 Patent Is Invalid Under 35 U.S.C. § 112

(i) Written Description and Enablement

The specification of a patent “shall contain a written description of the invention, and of the manner and process of making and using it, in such full, clear, concise, and exact terms as to

enable any person skilled in the art to which it pertains, or with which it is most nearly connected, to make and use the same, and shall set forth the best mode contemplated by the inventor or joint inventor of carrying out the invention." 35 U.S.C. § 112(a).

The Asserted Claim of the '067 patent is invalid under 35 U.S.C. § 112 for failing to adequately describe and/or enable the full scope of the claims for at least the following reasons.

The element "an elongate metal core having a first thickness, Tl, between 0.12 mm and 0.14 mm" is not supported by sufficient written description support in the specification to demonstrate that the purported inventors had possession of the full-scope of the claimed invention. Nor is the limitation enabled for their full-scope. Specifically, Claim 1's claimed thickness range of 0.12 – 0.14 mm encompasses tape measures thicker than what the applicants claimed to have invented. The '067 patent repeatedly describes the alleged invention as achieving a "high level of standout," despite "having a thickness of ***less than 0.13 mm***." *E.g.*, '067 patent at 1:54-67, 10:56-61, Table 1 (alleged inventive tape measures purportedly having steel thickness of 0.11 mm while admitting prior art tape measures had thicknesses of 0.13 mm). And to the extent that Milwaukee contends that applicants had no need to describe tape measures with thicknesses of 0.13 mm or greater because they were present in the prior art, such prior art tape measures anticipate and/or render claim 1 obvious.

The element "wherein a standout distance of the elongate blade from the housing is greater than 150 inches" is also not supported by sufficient written description support in the specification to demonstrate that the purported inventors had possession of the full-scope of the claimed invention. Nor is the limitation enabled for its full-scope. Claim 1 lacks any upper limit on the length of claimed standout, and therefore claim 1's full scope includes tape measures with infinite standout, including standout measuring the entire length of the blade. That full scope

must be enabled. *E.g.*, *Liebel-Flarsheim Co. v. Medrad, Inc.*, 481 F.3d 1371, 1378-79 (Fed. Cir. 2007). However, the specification nowhere describes such a blade, let alone teach a skilled artisan how to make such a blade without undue experimentation. Indeed, the greatest standout identified in the allegedly inventive blades in Table 1 is 164 inches. '067 patent at Table 1.

(ii) Indefiniteness

"The specification shall conclude with one or more claims particularly pointing out and distinctly claiming the subject matter which the inventor or a joint inventor regards as the invention." 35 U.S.C. § 112(b). A "patent is invalid for indefiniteness if its claims, read in light of the specification delineating the patent, and the prosecution history, fail to inform, with reasonable certainty, those skilled in the art about the scope of the invention." *Nautilus, Inc. v. Biosig Instruments, Inc.*, 572 U.S. 898, 901 (2014).

The Asserted Claim of the '067 patent is invalid as indefinite for at least the following reasons.

The term "wherein a standout distance of the elongate blade from the housing is greater than 150 inches," is indefinite. ***First***, in contending that the Accused Tape Measures infringe this limitation, to the extent that Milwaukee is relying on a standout testing method other than the method described in the specification, this term is indefinite because there are numerous ways to measure standout, and each would result in different results. *See* Klein Tools Initial Non-Infringement Contentions, Appendix A; *see also e.g.*, *Honeywell Int'l, Inc. v. Int'l Trade Comm'n*, 341 F.3d 1332, 1340 (Fed. Cir. 2003). ***Second***, even assuming that a person of skill in the art would know which method to use to determine standout, standout for a given tape measure varies from user to user, and even from use to use, meaning that a given tape measure may be found to meet this limitation for one user, but not another, or even from one use to

another use, rendering this term indefinite. *E.g.*, *Halliburton Energy Services, Inc. v. M-I LLC*, 514 F.3d 1244, 1254 (2008).

The terms "wherein a ratio of the curved width to the flat width is between 0.6 and 0.8," and "a curved width, wherein the curved width is less than the flat width" are also indefinite to the extent Milwaukee contends that a product meets this limitation so long as the curved width at a single location falls within the recited range. ***First***, Milwaukee identifies a single "curved width" for each of the accused tape measures in its infringement contentions, and relies on that single "curved width" to contend that the accused tape measures meet these limitations. *See* Milwaukee Initial Infringement Contentions, Appendix A. However, the "curved width" of the accused Klein Tools tape measures varies along the length of the blades, such that they do not meet this limitation. To the extent Milwaukee takes the position this could be width at a point, because the specification provides no guidance regarding where and how to measure the "curved width," and a given tape measure may or may not meet these limitations based on where the "curved width" is measured, this term is indefinite. *E.g.*, *Honeywell*, 341 F.3d at 1340; *Halliburton*, 514 F.3d at 1254. ***Second***, because the term refers to "the" curved width, but Milwaukee appears to contend the term covers products with varying curved widths, the term would not inform a person of skill with reasonable certainty which of "the" curved widths the term is referring to.

The terms "a curved height between 8.5 and 9.5 mm," and "wherein a ratio of curved height to flat width is greater than 0.285" are also indefinite to the extent Milwaukee contends that a product meets this limitation so long as the curved height at a single location falls within the recited range. ***First***, Milwaukee identifies a single "curved height" for each of the accused tape measures in its infringement contentions, and relies on that single "curved height" to

contend that the accused tape measures meet these limitations. *See* Milwaukee Initial Infringement Contentions, Appendix A. However, the "curved height" of the accused Klein Tools tape measures varies along the length of the blades, such that they do not meet this limitation. To the extent Milwaukee takes the position this could be height at a point, because the specification provides no guidance regarding where and how to measure the "curved height," and a given tape measure may or may not meet this limitation based on where the "curved height" is measured, this term is indefinite. *E.g.*, *Honeywell*, 341 F.3d at 1340; *Halliburton*, 514 F.3d at 1254. ***Second***, because Milwaukee appears to contend the term covers products with varying curved widths, the term would not inform a person of skill with reasonable certainty which of "the" curved heights the term is referring to under Milwaukee's apparent construction that there is a single "curved height."

### B. The Asserted Claims of the '064 Patent Are Invalid Under 35 U.S.C. § 112

In accordance with LPR 2.3(b)(4), Klein Tools also identifies grounds under which the asserted claims of the '064 patent are invalid under 35 U.S.C. § 112.

(i) Written Description and Enablement

(1) Claims 1 and 16: "actuator" and "locking mechanism"

At least based on MT's apparent interpretation of these terms, the terms "actuator" and "locking mechanism," are not supported by sufficient written description support in the specification to demonstrate that the purported inventors had possession of the full-scope of the claimed invention.

***First***, in its infringement contentions, Milwaukee accuses products that do not have an alleged "actuator" that is distinct from the alleged "locking mechanism." *See* Milwaukee Initial Infringement Contentions, Appendices B-1, B-2. Such a product is not supported by the written

description in the specification, nor is such a product enabled. The specification consistently and repeatedly describes the alleged invention as including an "actuator" that is distinct from the locking mechanism. *E.g.*, '064 patent at 1:28-39, 5:25-48, Figs. 1-10. Indeed, the claim language itself makes this clear. By contrast, there are no examples of, let alone sufficient disclosure of, "tool attachment system[s]" in the specification where the actuator and locking mechanism are literally and/or essentially the same.

***Second***, even under Milwaukee's apparent construction of "actuator" and "locking mechanism," these terms lack written description support and are not enabled because Milwaukee stretches the breadth of the claims well beyond any purported teachings in the written description. For example, Milwaukee contends that the Accused Tradesman Pro™ Pouches' handle, and the Accused MODbox™ Pouches' lock arm, meet the "actuator" limitation in claims 1 and 16, respectively. *See* Milwaukee Initial Infringement Contentions, Appendices B-1, B-2. However, the specification of the '064 patent only discloses an actuator including a button, 42, upon which force may be exerted to move the actuator post, 44, whereby force applied to the actuator results in the movement of a locking pin, 60, through a pin slot, 48, to move from an unlocked to locked position. '064 patent, Figures 6 & 7; id. at 5:26–48. Similarly, while Milwaukee contends that the Accused Tradesman Pro™ Pouches' handle, and the Accused MODbox™ Pouches' lock arm, meet the "locking mechanism" limitation in claims 1 and 16, respectively, the specification only describes the "locking mechanism" as requiring "a locking pin 60 that extends through a pinhole 62 through disk 22." *Id.* at 1:40–2:26, 5:1–6:38; *see also id*. at Figures 6 & 7. Therefore, to the extent Milwaukee contends "actuator" and "locking mechanism" are broad enough to capture products such as the Accused Tool Pouches, claims 1

and 16 are not supported by the written description in the specification, nor are such products enabled.

(2) Claims 1 and 16: "mating structure"

The term "mating structure" is not supported by sufficient written description support in the specification to demonstrate that the purported inventors had possession of the full-scope of the claimed invention at least under Milwaukee's apparent construction. The specification of the '064 patent describes the "mating structure" as a "disk 22." *Id.* at 4:8–10; *see also id.* at Figure 1. However, in its Initial Infringement Contentions, Milwaukee contends that the Accused MODbox™ Pouches, which do not have a "disk," but rather at most a top hook, meet the "mating structure" limitation. *See* Milwaukee Initial Infringement Contentions, Appendix B-2. Therefore, to the extent Milwaukee contends "mating structure" is broad enough to capture products such as the Accused MODbox™ Pouches, claims 1 and 16 are not supported by the written description in the specification, nor are such products enabled.

(3) Claims 1 and 16: "channel"

The term "channel" is not supported by sufficient written description support in the specification to demonstrate that the purported inventors had possession of the full-scope of the claimed invention at least under Milwaukee's apparent construction. The specification of the '064 patent describes the "channel" as an open cavity capable of coupling with the mating structure of the body:

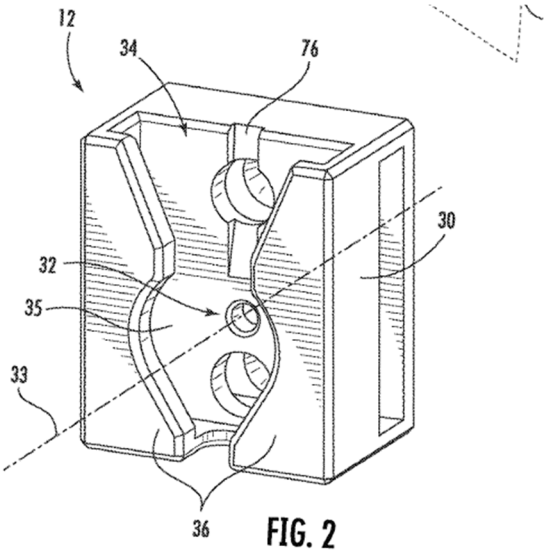


*Id.* at 4:35–38; *see also id.* at FIG. 2 (below). However, in its Initial Infringement Contentions, Milwaukee contends that the Accused MODbox™ Pouches, which do not have such a "channel," but rather a dual-rail design, meet the "channel" limitation. *See* Milwaukee Initial Infringement Contentions, Appendix B-2. Therefore, to the extent Milwaukee contends "channel" is broad enough to capture products such as the Accused MODbox™ Pouches, claims 1 and 16 are not supported by the written description in the specification, nor are such products enabled.

(ii) Indefiniteness

(1) Claims 1 and 16 (and all dependent claims)

As noted above, Milwaukee accuses products that do not have an alleged "actuator" that is distinct from the alleged "locking mechanism." *See* Milwaukee Initial Infringement Contentions, Appendices B-1, B-2. To the extent the Court adopts Milwaukee's apparent construction, the terms "a locking mechanism protruding past the rear surface of the body and into the locking hole of the receiver when the locking mechanism is in a locked position," "an actuator coupled to the tool attachment device," and/or "wherein the actuator is configured to move the locking mechanism from the locked position to an unlocked position," are indefinite, as

a person of skill would not know, with reasonable certainty what would constitute the alleged "actuator" versus the alleged "locking mechanism."

## V. **Reservation of Rights**

Fact discovery in this litigation is ongoing, and Klein Tools' prior art investigation, including via discovery into prior art references systems, is thus not yet complete. Klein Tools reserves the right to rely upon additional evidence of non-infringement, invalidity, or unenforceability obtained in the future as to any evidence demonstrating non-infringement, prior art reference or system that may anticipate and/or render obvious any of the asserted claims, or any evidence demonstrating inequitable conduct or other reason the Asserted Claims are unenforceable. For example, Milwaukee served its discovery responses to Klein Tools' first set of requests for production and interrogatories on Aug. 15, 2025. Milwaukee's responses were deficient in a number of respects, for example, failing to provide requested information regarding prior art testing described in the '067 patent, and Klein Tools reserves the right to amend its contentions to reflect any additional evidence obtained once Milwaukee substantively responds to these requests. Klein Tools further reserves the right to amend or supplement its contentions pursuant to the Court's Scheduling Order and the Local Patent Rules, including in consideration of Milwaukee's infringement contentions, claim construction positions, briefing and any amendments or supplements thereto.

Dated: August 19, 2025

Respectfully Submitted,

*/s/ Nathaniel DeLucia*

Brian A. Verbus
KIRKLAND & ELLIS LLP
333 W. Wolf Point Plaza,
Chicago, IL 60654
Tel: (312) 862-6000
Fax: (312) 862-2200
brian.verbus@kirkland.com

Gregory S. Arovas
Ryan Kane, P.C. (admitted *pro hac vice*)
Nathaniel DeLucia (admitted *pro hac vice*)
KIRKLAND & ELLIS LLP
601 Lexington Avenue
New York, NY 10022
Tel: (212) 446-4800
Fax: (212) 446-4900
garovas@kirkland.com
ryan.kane@kirkland.com
nathaniel.delucia@kirkland.com

**ATTORNEYS FOR DEFENDANT KLEIN TOOLS, INC.**

## CERTIFICATE OF SERVICE

I hereby certify that the above document has been served via electronic mail to all counsel of record on August 19, 2025.

*/s/ Nathaniel DeLucia*
Nathaniel DeLucia

## Table of Appendices

Klein Tools incorporates the Appendices listed below as if full set forth herein. Discovery has only just begun, and Klein Tools reserves the right to amend or supplement its contentions as set forth above.

| Description | Exhibit No. |
|---|---|
| **Non-Infringement Charts** | |
| ’067 Non-Infringement Chart | A |
| ’064 Non-Infringement Chart (Tradesman Pro) | B1 |
| ’064 Non-Infringement Chart (ModBox) | B2 |
| **’067 Invalidity Charts** | |
| Hernandez (’596) | C01 |
| Hernandez (’004) | C02 |
| Murray (’964) | C03 |
| Murray (’808) | C04 |
| Murray (’769) | C05 |
| Murray (’899) | C06 |
| Liao (’608) | C07 |
| CN 2869762Y | C08 |
| Stanley | C09 |
| DeWalt | C10 |
| AAPA Tape 1 | C11 |
| AAPA Tape 2 | C12 |
| AAPA Tape 3 | C13 |

| Description | Exhibit No. |
|---|---|
| **’064 Invalidity Charts** | |
| Kuny | D01 |
| Hellweg | D02 |
| Glock (’448) | D03 |
| Glock (’202) | D04 |
| Benyo | D05 |
| Albrecht Kind GmbH | D06 |
| Engel | D07 |
| Panosian | D08 |
| Hubbard | D09 |
| Stotts | D10 |
| ToughBuilt | D11 |
| Tajima SBS | D12 |