US005835185A

United States Patent [19]

Kallman et al.

[11] **Patent Number: 5,835,185**

[45] **Date of Patent: Nov. 10, 1998**

[54] **SPRING-HINGED FRAME FOR EYEWARE**

[76] Inventors: **William R. Kallman**, 3740 SW. Caldew St., Portland, Oreg. 97219; **Leonard M. Dorfman**, 14252 SW. McFarland Blvd., Tigard, Oreg. 97224; **John F. Ahern**, 14360 SW. Teal Blvd., Apartment, Beaverton, Oreg. 97005

[21] Appl. No.: **762,231**

[22] Filed: **Dec. 9, 1996**

Related U.S. Application Data

[63] Continuation of Ser. No. 647,646, May 15, 1996, abandoned, which is a continuation of Ser. No. 120,033, Sep. 10, 1993, abandoned.

[51] **Int. Cl.**[6] **G02C 5/16**; G02C 1/00

[52] **U.S. Cl.** **351/113**; 351/158

[58] **Field of Search** 351/113, 115, 351/111, 122, 158, 118, 119, 41

[56] **References Cited**

U.S. PATENT DOCUMENTS

3,042,548	7/1962	Aikens	351/122
3,683,168	8/1972	Tatje .	
3,923,384	12/1975	Leblanc	351/113
4,447,504	5/1984	Goebel .	
4,449,799	5/1984	Thoni .	
4,618,226	10/1986	Sartor et al. .	
4,675,259	6/1987	Totty .	
4,756,605	7/1988	Okada et al. .	
4,770,954	9/1988	Noordenbos .	
4,883,728	11/1989	Witehira .	
4,977,899	12/1990	Digby et al. .	
5,007,726	4/1991	Suzuki	351/122
5,142,406	8/1992	Lampert et al. .	

Primary Examiner—Hung X. Dang

Attorney, Agent, or Firm—Irwin M. Stein

[57] **ABSTRACT**

A power and control system for micro-electronics is described, as for lightweight, battery-powered electrochromic (EC) eyewear. Preferably such system includes a primary, lithium-type cell and a secondary, sealed lead acid-type cell in a hybrid, power-sharing configuration capable of supplying the low-energy, high-current (pulse) drain requirements of microelectronics, e.g. a switchable EC lens. A switch-mode power supply controller manages the power-sharing load on the hybrid battery system such that the secondary cell is charged by the primary cell. The system is capable of meeting short-term pulse drain requirements of switching EC lenses from clear to fully darkened at an acceptably fast rate and long-term operating life requirements of approximately 1500 cycles. The invented lead acid-type battery preferably is elongate, of uniform, right-rectangular cross section and provides over 20 mA-hours' capacity and the invented lithium-type battery preferably also is elongate, of uniform, right-rectanglular cross section and provides over 180 mA-hours' capacity, all in a tiny volume compatible with one or more volume-restricted spaces. Preferably, the lithium-type and lead acid-type batteries are of approximately equal form factor and volume, for symmetric placement thereof in a void within either temple. The temples are hingedly connected with the eyewear's front piece via a unique leaf spring that biases the former into one of two orientations relative to the latter. Dual like-cell battery configurations also are disclosed, along with a flexible circuit defining one or more frame-mounted transmissivity switches. A microcontroller is described that fits within a tiny void formed in the eyewear's bridge. Finally an external, battery-powered battery charger case and circuit are described for use with EC eyewear powered by dual lead acid batteries.

13 Claims, 6 Drawing Sheets

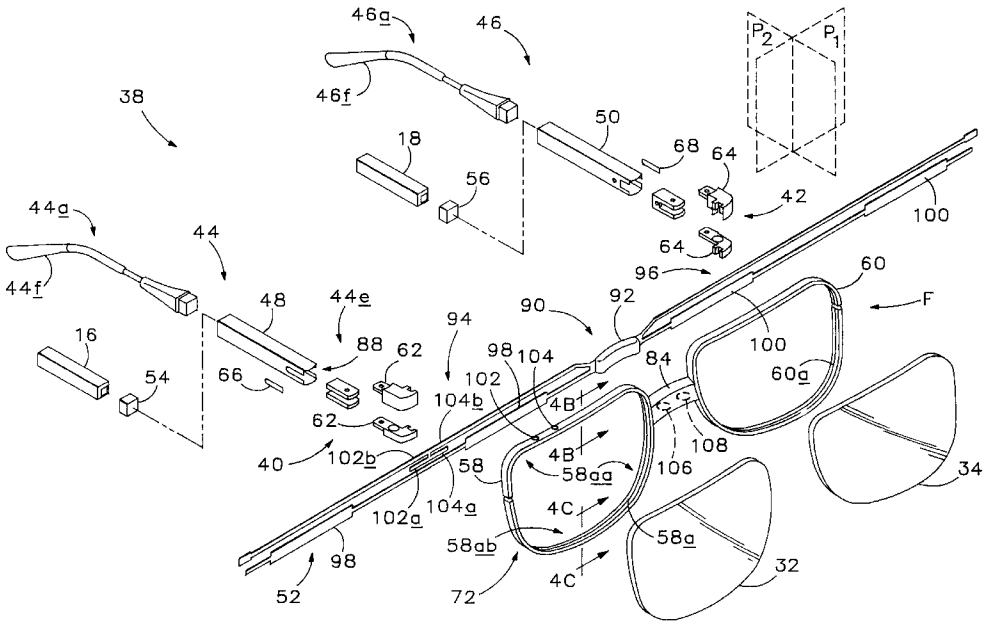

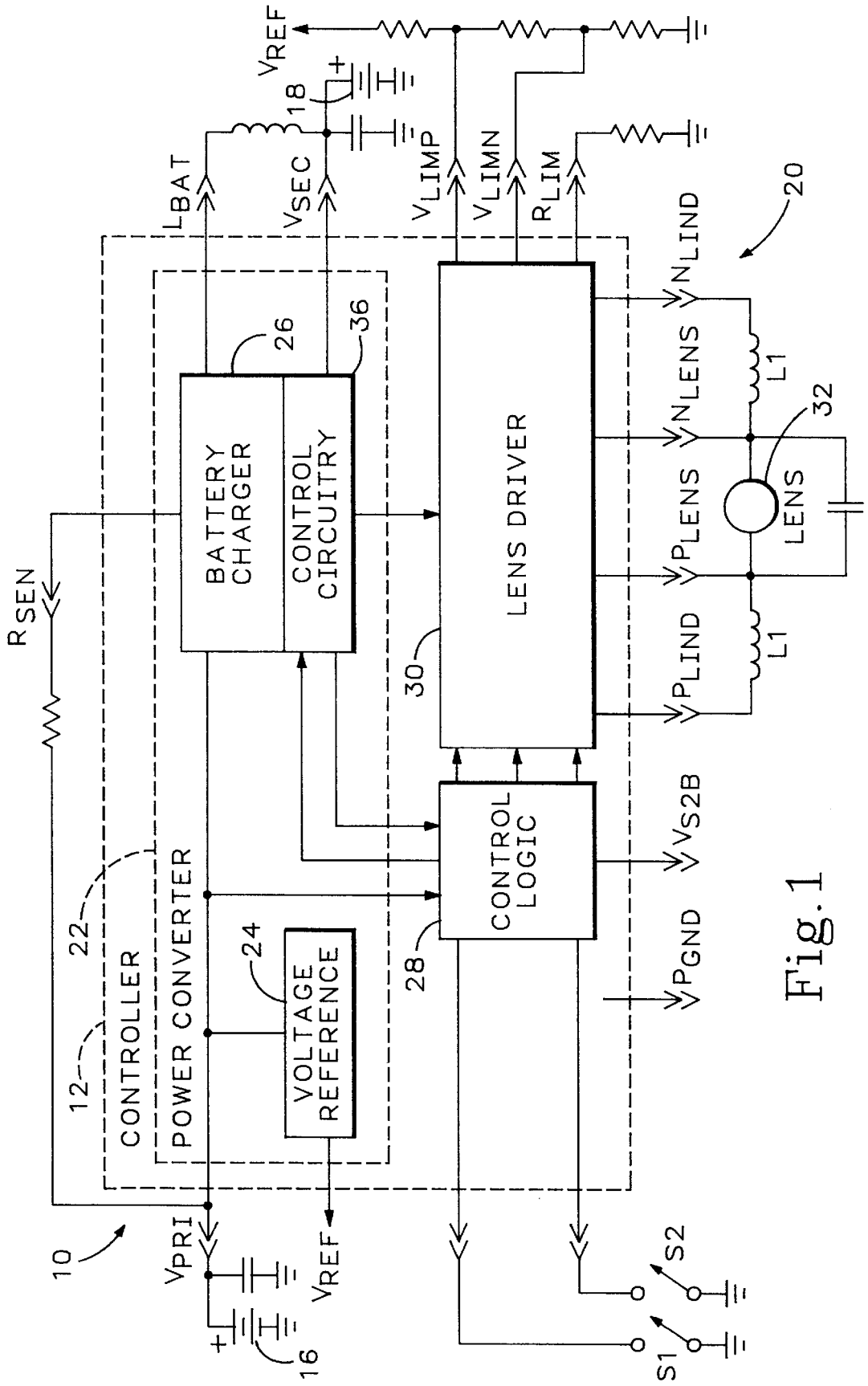
VREF
18
LBAT
VSEC
VLIMP
VLIMN
RLIM
NLIND
NLENS
PLENS
PLIND
VS2B
PGND
20
26
36
BATTERY CHARGER
CONTROL CIRCUITRY
LENS DRIVER
30
L1
32
LENS
RSEN
22
12
CONTROLLER
POWER CONVERTER
24
VOLTAGE REFERENCE
CONTROL LOGIC
28
10
VPRI
VREF
16
S2
S1

Fig. 1

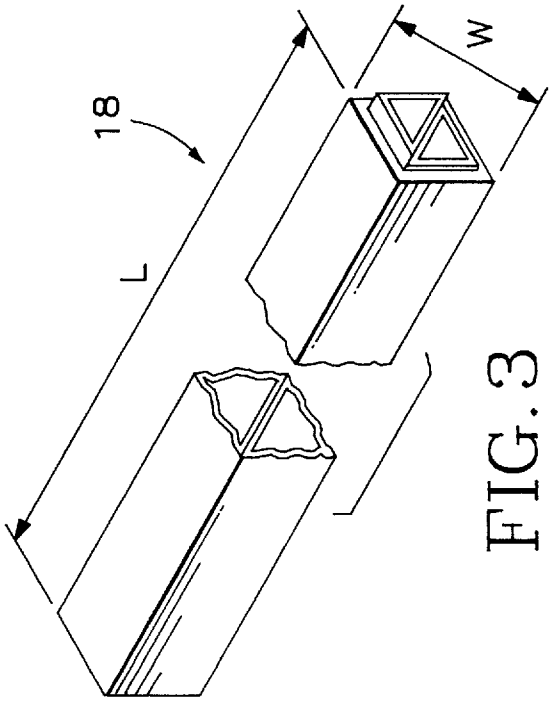

FIG. 3

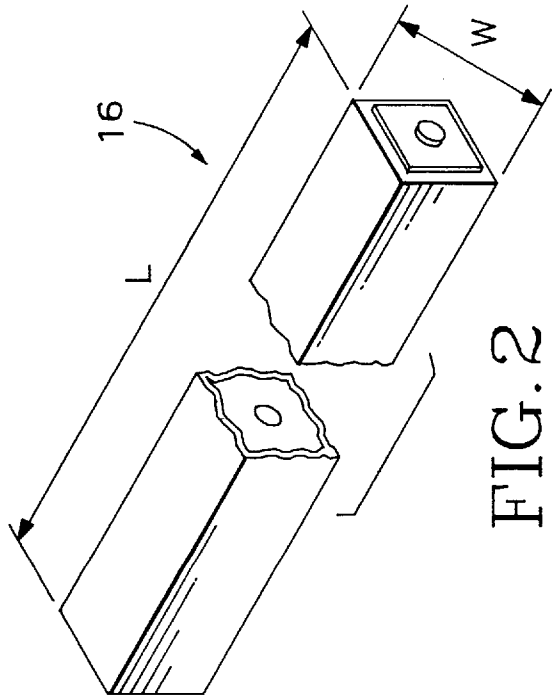

FIG. 2

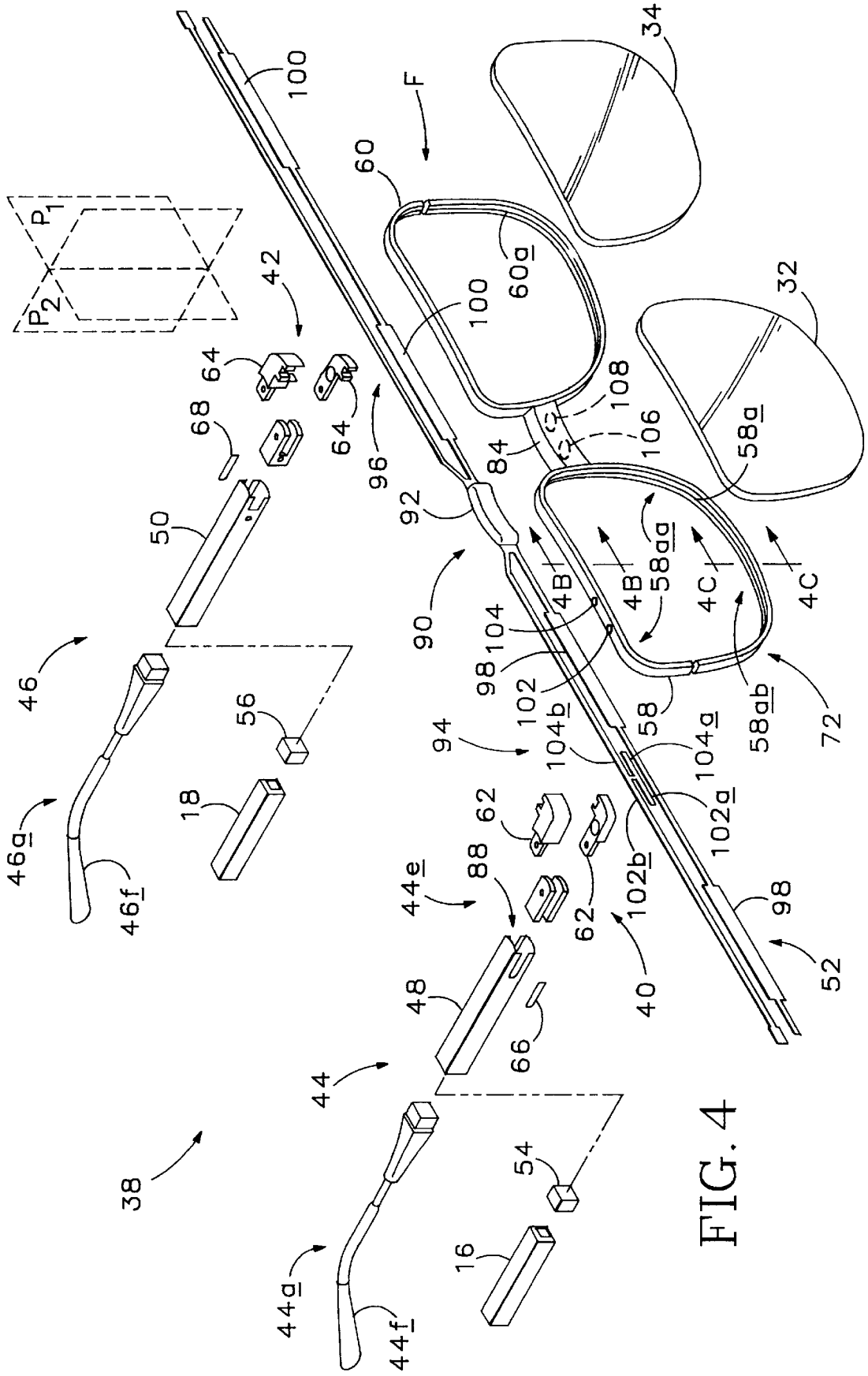
100
F
34
60
60a
100
32
P1
P2
42
64
64
68
96
108
106
84
58a
92
50
90
4B
4B
58aa
4C
4C
104
98
102
58
58ab
72
46
56
94
104b
104a
18
62
102a
46a
46f
88
44e
62
102b
98
40
52
48
66
44
38
54
16
44a
44f

FIG. 4

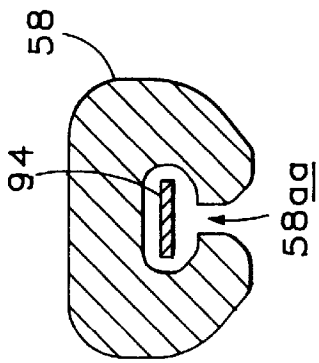

FIG. 4B

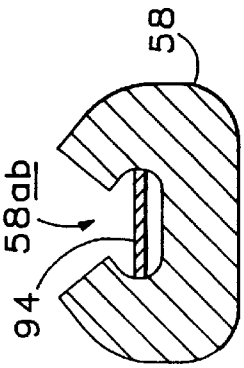

FIG. 4C

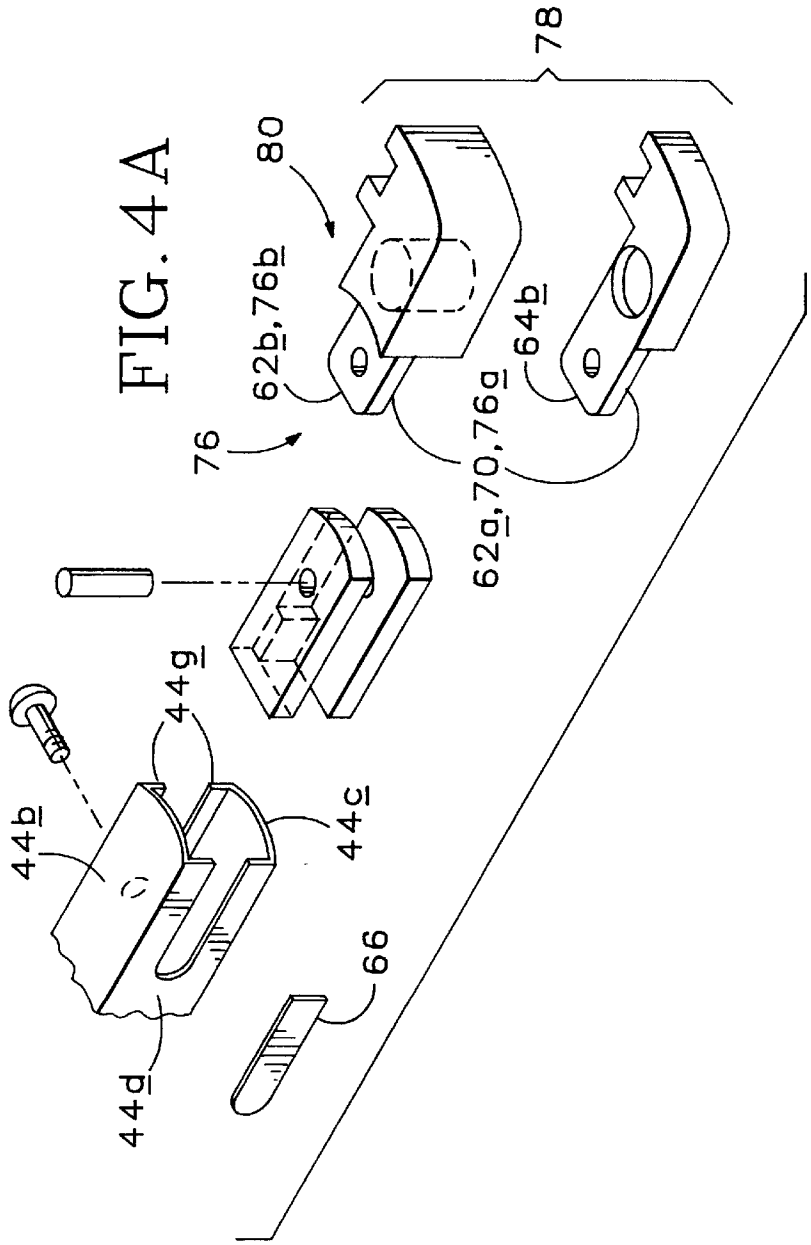

FIG. 4A

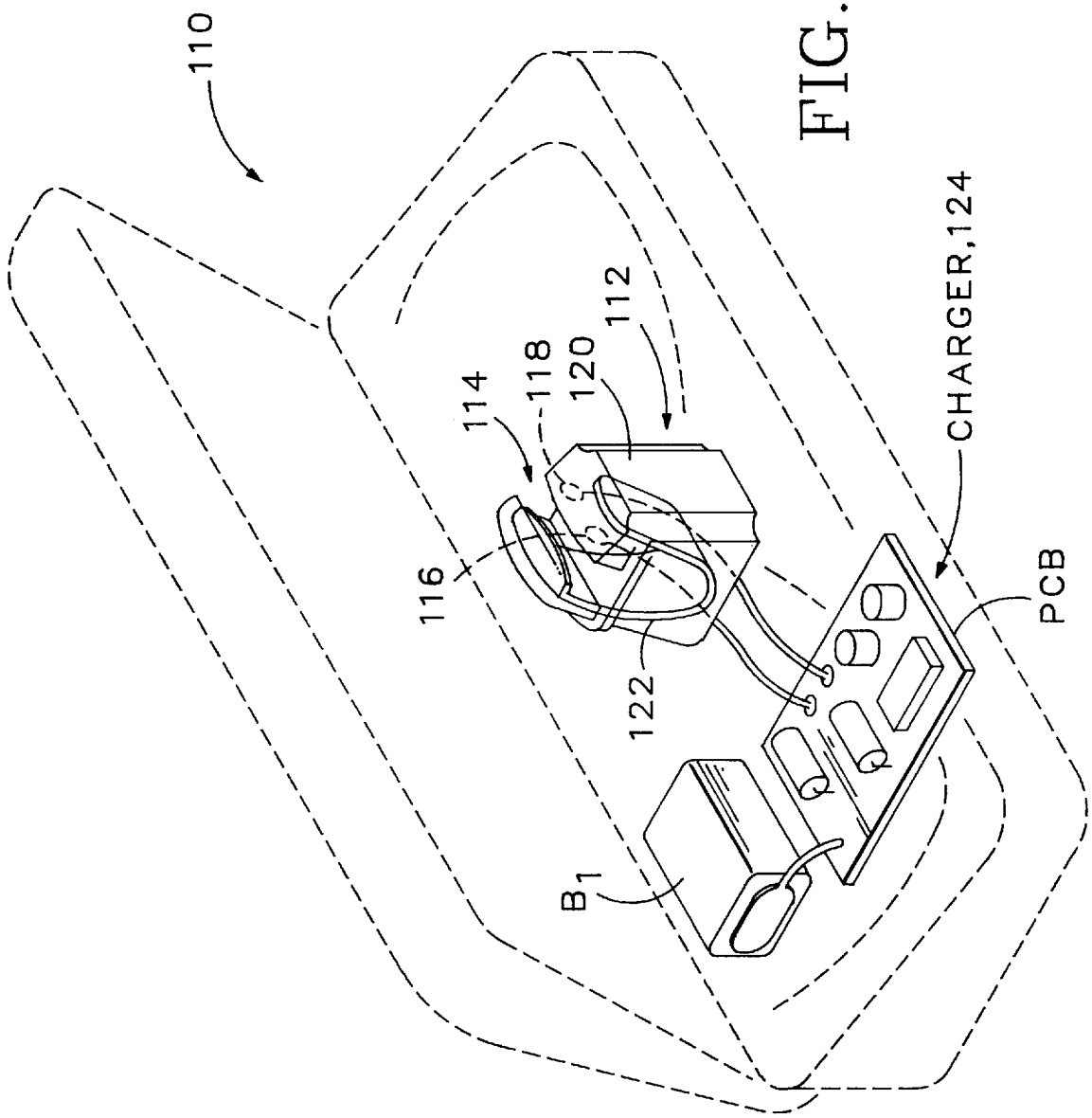

FIG. 5

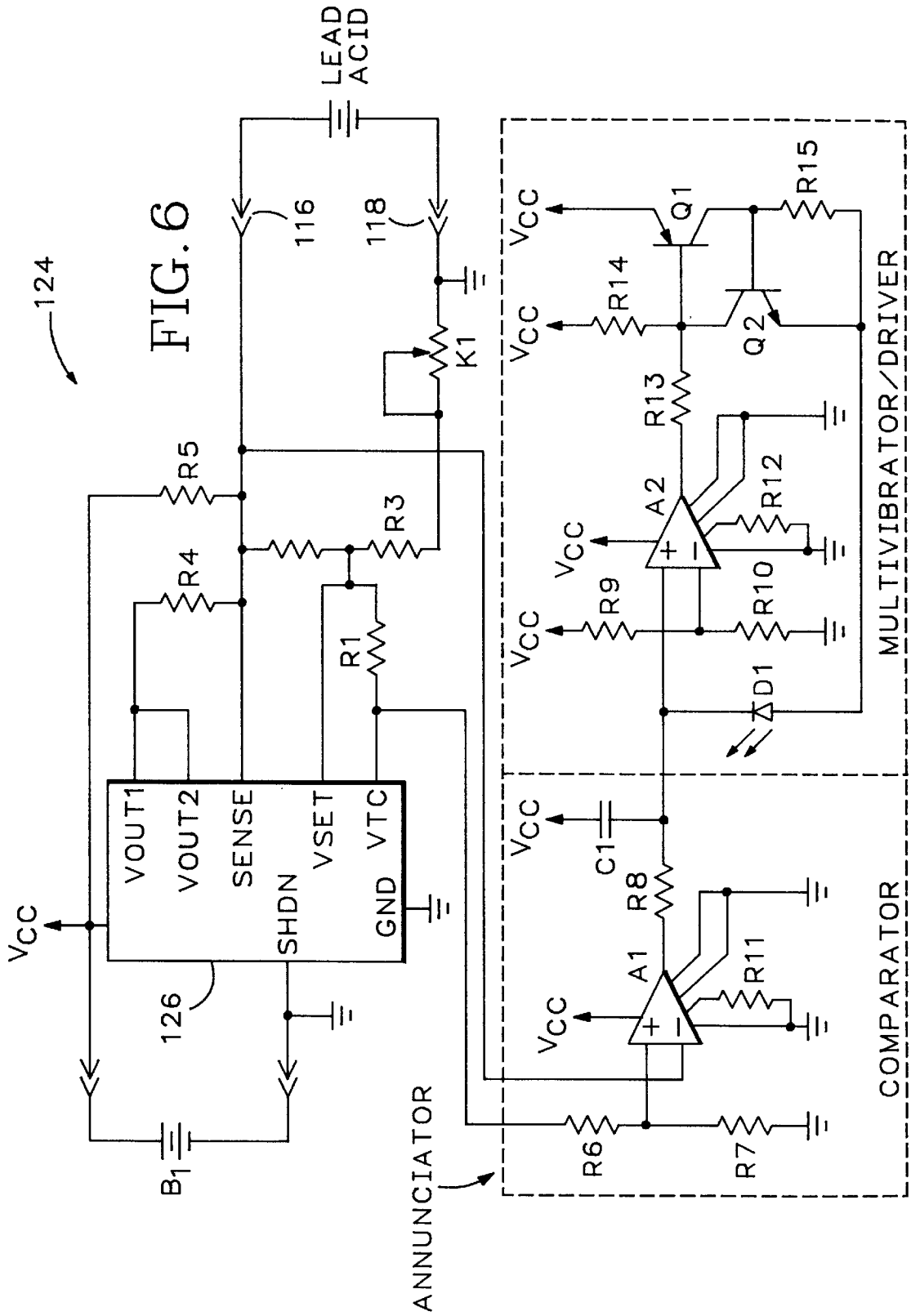
124
LEAD ACID
116
118
K1
R5
R4
R3
R1
VOUT1
VOUT2
SENSE
VSET
VTC
SHDN
GND
VCC
126
B1
ANNUNCIATOR
VCC
Q1
R15
R14
Q2
R13
A2
R12
R9
R10
D1
MULTIVIBRATOR/DRIVER
C1
R8
A1
R11
R6
R7
COMPARATOR

FIG. 6

SPRING-HINGED FRAME FOR EYEWARE

This application is a continuation of application Ser. No. 08/647,646, filed May 15, 1996 now abandoned, which is a continuation of of application Ser. No. 08/120,033, filed Sep. 10, 1993 now abandoned.

BACKGROUND AND SUMMARY OF THE INVENTION

The present invention relates generally to power and control systems for micro-electronics. More particularly, it concerns a battery, power management and control system therefor that features a high-power, long-life switching mode power supply compatible with various battery chemistries and an associated controller for supplying relatively short-term high-current switchable primary and relatively long-term low-current standby DC power in a volume-restricted space such as that of electrochromic (EC) eyewear. In a dual lead-acid battery configuration, an external battery charger integral with an EC eyewear case is provided. The invention also involves a unique temple including a leaf spring hinge assembly and a protective temple tip coating useful for eyewear generally.

Currently available electrochromic (EC) eyewear is characterized by long transmissivity switching times, short operating (e.g. battery) life and a bulky frame that reduce its aesthetic appeal. The invention represents a broad-based approach to solving various problems with power supply and controller microelectronics to achieve greatly improved switching times, longer and more stable operation and consumer demands for more aesthetic and lightweight frames. It does so with various battery chemistries having form factors compatible with eyewear temples, with micro-niniaturized power supply and controller electronics having a form factor compatible with eyewear bridges, with signal distribution and switching via flex circuitry, with improved hinges connecting temples and eyewires, with lens-protective temple tip coatings and with an external battery charger case for convenient recharging of lead acid cells in one battery configuration.

Hybrid battery systems are not new. U.S. Pat. No. 4,770,954 describes a switching power supply having two battery types in a hybrid arrangement having their positive output terminals connected in parallel through common-cathode connected diodes to supply an output voltage alternatively from either a high-energy density source or a low-energy density source. The sources are said to be lithium-type and zinc-silver oxide-type. U.S. Pat. No. 4,977,899 describes a dual-battery system for use in lightweight, portable electrocardiograph (ECG) monitoring devices also have been proposed. A lithium battery provides reduced-voltage level to sustain a volatile read-and-write memory (RAM) device over the long life of the monitor while triple, series-connected replaceable/rechargeable alkaline batteries provide primary power to circuit elements for a short term of high-demand ECG data monitoring and recording. U.S. Pat. No. 4,883,728 describes a lead acid automotive battery that meets diverse current requirements by providing cells having different electrode thicknesses.

It has been determined that use of a primary cell alone cannot best meet certain pulse power drain demands placed, for example, on commercially available silver oxide "button" batteries (such as those used in watches and some pocket cameras) or lithium cells having a small form factor. This is because of high internal resistance in such batteries that leads to internal losses during pulse discharge, and the danger of damage when such batteries are over-driven.

The invention in a first embodiment solves this problem by using dual silver oxide batteries, in another by using dual lead acid batteries and in yet another by using dual lithium/thionyl chloride batteries. The invention in still another embodiment solves this problem by using the lower internal resistance of a lead acid cell secondary battery to provide the pulse rate requirements, while using a lithium-type cell primary battery to provide the needed capacity for long life. The invention in these various embodiments includes a controller that accommodates any of the various battery combinations and provides the needed switching currents and voltages to meet the demanding EC eyewear switching and lifetime requirements.

Briefly summarizing the merits of the various embodiments, the invented system preferably includes a primary, lithium-type cell and a secondary, sealed lead acid cell in a hybrid, power-sharing configuration capable of supplying the relatively low-energy high-current (pulse) drain and relatively high-energy, low-current requirements, for example, of a switchable EC lens, while providing high operating cycle life and shelf life. A switch-mode power supply controller manages the power-sharing load on the hybrid batteries such that the secondary cell is charged by the primary cell. The system is capable of meeting the demanding EC short-term lens pulse drain requirements of approximately 60–130 milliamps (mA) for five to ten seconds (required to switch EC lenses from clear to fully darkened at an acceptably fast rate) and the long-term life requirements of over two thousand cycles. The invented lead acid battery provides approximately 12–15 mA-hours' capacity and the invented lithium-type battery provides nearly 180 mA-hours' capacity, all in a tiny volume of approximately one milliliter (1 ml) that is fittable, for example, within voids formed in either of the frame members of eyeglasses. Preferably, the lithium-type and lead acid-type batteries are of approximately equal form factor and volume, for symmetric placement thereof in such volume-restricted spaces.

In the dual lithium/thionyl chloride battery subsystem, a nominal 3.65 volts (3.65 V) output of the dual, parallel-connected lithium-type batteries (each approximately 35 mm long) is converted down to a maximum potential of 2.2 V at sufficiently higher current that rapidly switching the EC lenses is possible. In the dual lead acid battery subsystem, in which the batteries are connected in series, a nominal 4 V output of the batteries is used by a lens driver circuit to drive the EC lenses at a high switching current that characterizes the lead acid cells, and an external battery charger case provides for convenient, periodic recharging of the lead acid cells. In the dual or quad silver oxide battery subsystem, two to four batteries are operated in series and/or parallel nominally to supply 4 V at up to approximately $-150\ mA \leqq I + 150\ mA$. Accordingly, the best characteristics of each of the cell types flexibly are accommodated in various form factors and with various lifetimes that are compatible with a wide range of EC eyewear and similarly demanding applications.

The invented system in its preferred embodiment thus integrates the better properties of lithium-type and lead acid-type cells in a hybrid arrangement that also avoids their known shortcomings. The invented system provides unprecedented long life via the primary cell and unprecedented high switching capacity via the secondary cell in an unprecedented small volume. This advantageous characteristic of the invented system in its preferred embodiment will be referred to herein as high energy density. In the alternative embodiments, the voltage/current characteristics and capacities of various paired cell-types are optimized for EC

eyewear switching applications, some of them focused on extending useful battery life, others focused on avoiding battery recharge requirements, yet others focused on reducing battery replacement cost and still others focused on minimizing frame and temple size for aesthetic reasons.

Other aspects of the invention include the provision of a unique hinge assembly, including a leaf spring defining an inner wall of a forward region of the battery tubes, connecting the eyewear's eyewires and each temple. They also include the provision in at least an inner region of the temple tips of a polymeric material for protecting the EC lenses when the temples are folded. Finally, they include the provision of an external battery charger case for supporting the EC eyewear and for charging relatively short-lived batteries, e.g. a lead acid pair, without disassembly of the eyewear and with a ultra-low-power annunciator to apprise the EC eyewearer of the charging status.

These and additional objects and advantages of the present invention will be more readily understood after a consideration of the drawings and the detailed description of the preferred embodiment.

BRIEF DESCRIPTION OF THE DRAWINGS

FIG. **1** is a system block diagram of the invented battery power supply made in accordance with its preferred embodiment, illustratively used in an EC lens converter circuit.

FIG. **2** is a cross-sectional plan view of one of the batteries of the hybrid battery subsystem.

FIG. **3** is a cross-sectional plan view of the other of the batteries of the hybrid battery subsystem.

FIGS. **4** and **4**A are isometrical views of the hybrid battery subsystem of FIG. **1**, further including the invented controller, switch and interconnect components, all fitted within a frame of a pair of eyeglasses.

FIGS. **4**B and **4**C are detailed cross-sectional views of certain inventive aspects of the eyewires shown in FIG. **4**.

FIG. **5** is an isometric view of an external battery charger case for use with the dual lead acid cell battery configuration.

FIG. **6** is a schematic circuit diagram of the external battery charger within the case shown in FIG. **5**.

DETAILED DESCRIPTION OF THE PREFERRED EMBODIMENT

FIG. **1** schematically illustrates at **10** the invented power supply, or battery/power management, system for providing primary and secondary (back-up) DC power to microelectronics such as electrochromic (EC) eyewear. The use of system **10** is not limited to eyewear, of course, as will be appreciated by those skilled in the art. The invention is believed to be useful in any microelectronic application requiring relatively long-term low-current standby DC power and relatively short-term high-current switchable DC power in a volume-restricted space.

Power supply system **10** preferably includes a controller **12** and a hybrid battery subsystem **14** (indicted in dashed outline) including a first or primary battery **16** of a given cell type preferably including a lithium-type cell, e.g. one having a composition chosen preferably from lithium/thionyl chloride ($LiSOCl_2$) and lithium (poly-)carbon monofluoride ($(CF)_n$/Li), and a second or secondary battery **18** of a given cell type (different from the first cell type) preferably including a sealed lead acid-type cell. Primary and secondary batteries **16**, **18** are operatively coupled by controller **12** and cooperate with one another in a hybrid arrangement to supply DC power to micro-electronic circuitry such as an EC lens converter indicated generally at **20**.

Controller **12** preferably includes a switch-mode DC power converter, indicated in FIG. **1** generally at **22**, which is powered by first battery **16** and which is capable of charging second battery **18**. By its unique organization including controller **12** and hybrid battery subsystem **14**, system **10** meets stringent operating characteristics including **1**) low-energy, high-current (pulse) drain requirements of at least approximately 60–130 mA for 5–10 seconds (as required to switch EC lenses from clear to fully darkened at an acceptably fast rate) and 2) high-energy, low-current operating long life of greater than 6 months or approximately two thousand cycles and a shelf life of greater than approximately one and one-half years (as required of quality, durable EC eyewear).

It is believed that this unique combination of two battery chemistries best matches the requirements of high energy density and best achieves aesthetic demands of micro-electronic applications such as solid-state EC eyewear, yet is robust enough to provide both pulse discharge capability and overall power capacity needed to power micro-electronic applications such as EC eyewear lenses requiring fast, full color-switching times (under five seconds) and high, full color-switching cycle counts (more than fifteen hundred). The invention thus provides unprecedented switching rate and extended life, as contrasted with prior EC eyewear that manages full color switching in approximately fifteen seconds for only approximately three hundred cycles.

Power converter **22** may be seen from FIG. **1** preferably to include a voltage reference **24** and an internal battery charger **26**, connected as indicated to primary and secondary batteries **16**, **18**. System **10** as used in the illustrated EC lens converter circuit may be seen preferably to include control logic **28** and a preferably switch-mode lens driver **30** connected as indicated to at least one EC lens **32** (illustrated only schematically in FIG. **1**) that may be mounted within an eyewear frame (not shown in FIG. **1**, but shown in FIG. **4**).

It will be understood by those skilled in the art that lens **32**, like its companion, mirror-image, lens **34** (not shown in FIG. **1**, but shown in FIG. **4**), is capable of switching its visible light transmissivity, e.g. at least its transmissivity of light energy, within the visible frequency spectrum, that is incident thereon, between approximately 15% transmissivity (referred to herein as a darkened condition of the lens) and approximately 70% transmissivity (referred to herein as a clear or bleached condition of the lens). It will be appreciated that ultraviolet and other harmful, near-visible light components preferably are filtered by conventional means such as coating the EC lens. Thus, the invention provides the EC eyewearer with constant protection, as well as with manually operable and thus selective comfort. Switching is accomplished by the operation of one or more switches such as manually operable switches **S1**, **S2**.

Various dual like-cell battery configurations are contemplated by the invention, as alternatives to the hybrid-cell configuration described and illustrated in detail herein. For example, it has been discovered that four silver oxide batteries such as those used in electronic wristwatch and camera applications may be used to supply switching current to EC lenses **32**, **34**. Alternatively, dual lead acid cells may be used, although such require frequent recharging, as will be described in detail below. In such dual, like-cell battery subsystems, form factors similar to that described above in reference to the hybrid-cell battery subsystem are preferred,

with like electromechanical temple tubing encasing, end capping and flex circuit interconnecting, as will be described in detail below.

It will be appreciated that, in accordance with the preferred embodiment of the invention, two frame-mounted switches **S1**, **S2** are provided for manual switching of both EC lenses between their bleached (high-transmissivity) and darkened (low-transmissivity) states. In such embodiment, momentary closure of one of normally-open push-button switches **S1**, **S2** causes the lenses progressively to darken until the switch is released, and momentary closure of the other of switches **S1**, **S2** causes the lenses progressively to bleach until such other switch is released. If both of switches **S1**, **S2** are depressed at once, the lenses progressively bleach until the switches are released.

It will be understood from FIG. **1** that switches **S1**, **S2** are logic-level switches that are electrically connected to logic inputs of control logic **28**, which switches simply ground otherwise high-logic level signals to indicate to control logic **28** that the user of the EC eyewear intends to change the transmissivity of its lenses. Thus, references herein to the connection of switches **S1**, **S2** between controller **12** and lenses **32**, **34** will be understood to refer to an operative, rather than a physical, connection therebetween. Advantageously, this use of logic level switching, rather than of relatively higher-current switching of lenses **32**, **34** by lens driver **30**, renders it possible to use tiny-volume membrane switches activated by tiny frame-mounted push buttons, as will be described.

Those skilled in the art will appreciate that coded or uncoded plural-switch operations alternatively may be used, within the spirit and scope of the invention. For example, a single switch might be scanned and its closure and/or cycle time measured such that the timing and/or rate of closure determines the desired switching operation, as is known in the field of wristwatches and other micro-electronics applications.

EC lenses **32**, **34** may be of any known composition and lay-up compatible with the electromechanical configurations of the disclosed lens converter and eyewear frame. Illustratively, lenses **32**, **34** may be formed from laminar glass substrates, and may have active layers therein capable of producing, upon the application of a DC potential at the lenses' edges, a desired change in transmissivity of near-visible light. U.S. Pat. No. 5,142,406 entitled ELECTROCHROMIC OPTICAL SWITCHING DEVICE and issued Aug. 25, 1992, with which familiarity is assumed, describes one such EC device and its operation. EC lens edge layer contact and isolation may be accomplished as taught therein or by any suitable method, e.g. via the selective application of a conductive composition such as gold ink to a peripheral edge region of lenses **32**, **34**. Protective layers providing ultraviolet screening and reducing visible light reflection may be used, without departing from the spirit and scope of the invention.

An EC lens behaves somewhat like a large capacitor that is chargeable to a desired voltage level at which it passively remains for as long as the voltage between its electrodes is maintained. This charge-maintaining capacity is due primarily to relatively low lens leakage currents, which may be as small as approximately 1 μA. Those skilled in the art will appreciate that the choices of materials, processes, coating thicknesses, etc. affect such EC lens performance characteristics, including series capacitance and resistance, leakage current, switching time, transmissivity range, stability and life expectancy.

The discrete devices and the voltage reference shown in FIG. **1** are believed to be readily understood by those of skill in the art, and may be of any conventional design compatible with large-scale integration. Thus, for the sake of brevity, they are not described in detail herein. The control logic and lens driver shown in FIG. **1** will be understood by those of skill in the art in detail by the description of the operation of switches **S1**, **S2**, and internal battery charger **26**. It will be appreciated that lens driver **30** preferably is implemented as a switch-mode DC power converter that may be quite similar to the switchmode DC power converter implementation of internal BATTERY CHARGER **26** to be described below.

Briefly summarizing the operation of power supply system **10** by reference to the functional blocks of FIG. **1**, the illustrated signals will be described by reference to their signatures. V_{PRI} and V_{SEC} represent the positive terminals, respectively, of primary and secondary batteries **16** and **18**, suitably decoupled by corresponding external capacitors, as shown. V_{REF} represents a stable voltage level established by VOLTAGE REFERENCE **24** as a function of V_{PRI}. V_{REF} is divided down by three series-connected external resistors to produce V_{LIMP} (a positive voltage reference level) and V_{LIMN} (a negative voltage reference level) that are used by LENS DRIVER **30** to establish, respectively, the maximum and minimum operating voltages of lenses **32**, **34**. Another external resistor is used to establish R_{LIM}, which sets a current limit for LENS DRIVER **30**. A precision external resistor is connected to V_{PRI} to define R_{SEN}, a signal used by internal BATTERY CHARGER **26** as a current limit in the hybrid battery subsystem configuration of invented power supply **10**.

P_{GND} represents a ground reference for the preferred tile array implementation of controller **12**. V_{S2B} represents a secondary battery voltage-sense signal that essentially enables CONTROL LOGIC **28** to turn off LENS DRIVER **30** if either lead acid battery of hybrid battery subsystem **14** exhibits an under-voltage condition. L_{BAT} is produced by internal BATTERY CHARGER **26** in hybrid battery system configurations that include a lithium-type cell and is connected to V_{SEC} via an external inductor, as shown. Such external inductor, it will he understood, may be fitted within a corner block of the frame of eyewear **38**, as will be described by reference to FIGS. **4** and **4A**.

Finally, P_{LIND} and P_{LENS} are produced by LENS DRIVER **30** for the respective drive and sense connections via one of the windings of dual-wound inductor **L1** with the lenses' positive electrodes, and N_{LIND} and N_{LENS} are produced by LENS DRIVER **30** for the respective drive and sense connections via the other winding of dual-wound inductor **L1** with the lenses' the negative electrodes. Those of skill in the art will appreciate that one or more lenses such as lenses **32**, **34** connected in parallel with one another and with an external filter capacitor may be so driven by LENS DRIVER **30**.

Internal BATTERY CHARGER **26** may be seen to form a part of what is referred to herein as a switch-mode DC power supply, or converter, **22**. BATTERY CHARGER **26** also may be seen to be operatively coupled with CONTROL LOGIC **28** and CONTROL CIRCUITRY, indicated generally at **36**, thereby efficiently to transfer power from the secondary cell to EC lens **32** and to act as a battery charger to trickle recharge secondary battery **18** from primary battery **16**. CONTROL CIRCUITRY **36** also cooperates with control logic **28** to manage the color-switching control of the EC lens by way of LENS DRIVER **30** and switches **S1**, **S2**. Those of skill in the art will appreciate that CONTROL

CIRCUITRY **36** thus operates selectively to supply power from the charger to the battery subsystem.

Preferably, the power supply within battery charger **26** is a current-limiting, step-down, or 'buck', switching regulator that operates discontinuously. In other words, the power supply of charger **26** operates only when the EC lenses are not being charged by the control circuitry, e.g. lens driver **30**. Also, the power supply stops charging the batteries when the charge voltage reaches nominally 2.26 V. The power supply accepts input voltages within the range between 2.6 V and 4.4 V, thereby rendering it compatible with the various battery configurations described herein. The power supply's Output current into a secondary, e.g. lead-acid cell, battery is approximately 500 μA at 2.25 V and 25° C. The external output inductor shown in FIG. **1** is preferably approximately 750 μH, and may exhibit a series resistance as high as approximately 25Ω. Importantly, the power supply's efficiency is greater than approximately 70–80%, as measured with a primary battery voltage of 3.5 V and secondary battery voltage of 2.2 V.

Lens driver **30** preferably acts as a constant-current source, with voltage limits compatible with charging an EC lens such as lenses **32**, **24** to a desired voltage level representing a desired visible-light transmissivity. Preferably, lens driver **30** is implemented as a four-quadrant switching power converter including quad, full-bridge configured output transistors providing bidirectional current flow and low voltage drop in either direction. The preferred implementation of lens driver **30** employs at its output a dual wound differential inductor **L1** that forms a part of an L-C output filter (for producing a smooth output waveform and preferably approximately smooth, linear switching operation of EC lenses **32**, **34**).

In accordance with the preferred embodiment of the invention, bipolar complementary metal oxide semiconductor (BICMOS) is used to implement the power supply and control circuitry functions described herein in what is referred to in the chip design field as a tile array. Such a low on-resistance semiconductor fabrication process provides the desired design flexibility, tiny volume, low power, long life, cool operation and stable operation that is demanded by many micro-electronic applications including quality EC eyewear. Those of skill in the art will appreciate that alternative circuit and chip design and fabrication processes may he used, so long as they are capable of achieving the desired functional density that is required in meeting the aesthetic demands of eyewear consumers.

Those of skill in the art will appreciate that such control circuitry may in alternative embodiments include internally masked or externally programmable logic or jumpers that determine what battery configuration is present and provides the suitable charging current and voltage via BATTERY CHARGER **26** to the battery subsystem when lens driver **30** is inoperative, i.e. when the batteries are not being used to switch or power EC lenses **32**, **34**. It will be appreciated that such external resistors, as well as other external components, may be integrated along with their associated power supply and control circuitry, thus further to reduce circuitry volume and further to increase functional density.

The invented hybrid-battery power supply may be described, for use in EC eyewear, as including first and second batteries **16**, **18** having a lithium-type cell and a lead acid-type cell, respectively, and controller **12** for operatively connecting the same to one another and to EC lens **32**. Controller **12** preferably includes switch-mode power converter **22** that, powered by first battery **16**, is capable of charging second battery **18**. Controller **12** may be seen from FIG. **1** to be responsive, while being powered by first battery **16**, to one or more manually operable switches **S1**, **S2** connected with the EC eyewear to supply power from second battery **18** to EC lens **32** via lens driver **30**. Persons skilled in the art will appreciate that the invented hybrid-battery power supply lends itself to numerous alternative applications, all within the spirit and scope of the invention.

FIG. **2** shows primary battery **16** in a cross-sectional plan view that illustrates its advantageous form factor and functional density. Primary battery **16** preferably takes the form of a lithium-type cell that provides at least approximately 200 mA-hours' energy capacity, which satisfies the long cycle or operating life requirement, e.g. more than approximately six months, and the long shelf life, e.g. more than approximately one and one-half years, of EC eyewear and similarly demanding micro-electronic applications. Primary lithium thionyl chloride battery **16** occupies a volume preferably of less than approximately 1.0 ml, more preferably of less than approximately 0.8 ml and most preferably less than approximately 0.65 ml. Such a tiny volume is achieved by the illustrated chemistry, cell and electrodes configuration, and preferably battery **16** is housed in a substantially sealed, preferably metal, canister.

It may be seen from FIG. **2** that primary lithium thionyl chloride battery **16** preferably is elongate and of generally uniform, e.g. rectilinear and more preferably right-rectangular, cross section. It also may be seen that primary battery **16** preferably has a length (L)-to-width (W) ratio of at least approximately 5:1, more preferably at least approximately 7:1 and most preferably at least approximately 8:1.

FIG. **3** shows secondary battery **18** in a cross-sectional plan view that similarly illustrates its advantageous form factor and functional density. Secondary battery **18** takes the form of a lead acid cell that provides at least approximately 10–20 mA-hours' energy capacity, while also meeting the long operating and life requirements of, for example, EC eyewear. Secondary lead acid battery **18** occupies a volume preferably of less than approximately 1.0 ml, more preferably of less than approximately 0.8 ml and most preferably less than approximately 0.65 ml. Such a tiny volume is achieved by the illustrated chemistry, cell and electrodes configuration, and preferably battery **18** is housed in a substantially sealed, preferably metal canister.

It may be seen from FIG. **3** that secondary lead acid battery **18** preferably is elongate and of generally uniform, e.g. rectilinear and more preferably right-rectangular, cross section. It also may be seen that, like primary battery **16**, secondary battery **18** preferably has a length (L)-to-width (W) ratio of at least approximately 5:1, more preferably at least approximately 7:1 and most preferably at least approximately 8:1. Importantly, secondary lead acid battery **18** has a pulse current capacity of at least approximately 60–130 mA for at least approximately 3–5 seconds, and preferably for at least approximately 10–15 seconds, i.e. long enough to fully color switch the EC lenses.

This battery characteristic uniquely achieves the high pulse current drain requirements of EC eyewear and similarly demanding applications wherein user-responsiveness to switching the state of the micro-electronics must be relatively fast, e.g. no more than approximately 5–15 seconds. Those of skill in the art will appreciate that it is preferable to provide EC eyewear having a substantially symmetric switching time, whether from bleached to dark or dark to bleached. While prior EC eyewear may achieve relatively short, e.g. approximately 5 second, switching

times from bleached to dark, they require much longer, e.g. approximately 15 second, switching times from dark to bleached. The present invention achieves substantially symmetric, and relatively shorter, e.g. approximately 5–10 second, full color-switching times, regardless of the starting state of the EC lenses.

FIG. **4** shows the illustrated application of the invented system whereby, in accordance with the preferred embodiment thereof, the tiny volume that has been achieved is approximately 4 mm×4 mm×40 mm=640 mm^3 each for the hybrid, lithium and lead acid battery packages for a total volume of slightly over 1 ml for the illustrative EC eyewear application. It may be seen from FIG. **4** that the form factors of first and second batteries **16**, **18** preferably are approximately equal, and that the first and second batteries occupy volumes that are approximately equal to one another. Such lends the invented hybrid battery subsystem to applications such as EC eyewear in which extremely limited space is available and in which such limited space is approximately equally divided. It also may seen that, for such eyewear applications, first and second batteries **16**, **18** also preferably are substantially symmetrically located within either temple of the eyewear, thus freeing other areas of the eyewear for other micro-electronics such as controller **12**, control logic **28** and lens driver **30**.

Summarizing now, by reference still to FIG. **4**, the invented EC eyewear, indicated generally at **38**, may be seen preferably to include an eyewear frame such as eyeglass frame F; an EC lens such as lens **32** and/or lens **34** mounted therein, with the lens being capable of switching its visible light transmissivity; one or more switches such as manually operable switches S1, S2 also preferably mounted therein, with at least one of the switches being operatively connected to the lens; and a power supply such as hybrid battery power supply **10** preferably contained within the frame. Such power supply preferably includes a controller such as controller **12**; a first battery such as primary lithium-type battery **16** for supplying standby current to the controller; and a second battery such as secondary lead acid-type battery **18** for supplying switching current through the connected switch to the lens. Preferably, the controller includes a switch-mode power converter such as power converter **22** capable of charging the second battery, as described and illustrated herein.

It may be seen from FIG. **4** that first and second batteries of whatever cell type, in accordance with the preferred embodiment of the invention, are symmetrically located on either side of frame F immediately behind lateral hinge assemblies **40**, **42** that connect their respective temples **44**, **46** to frame F. For aesthetic and safety reasons, each battery is enclosed within a battery sleeve or tube such as mirror image tubes **48**, **50**. Each battery is sealed within its respective tube, and is electrically connected to a flex circuit **52** by a battery tube end cap such as end caps **54**, **56**, which provide sealing enclosure of the batteries to prevent leakage from reaching the exterior of the eyewear and to prevent moisture from reaching the interior thereof. One suitable means for sealing lead-acid batteries within battery tubes involves the use of a metal-filled, e.g. lead-filled, polymer glue as a sealant.

A unique feature of invented EC eyewear **38** is applicable not only to EC eyewear, but is believed to be useful in eyewear applications generally. Invented hinge assemblies **40**, **42** preferably are provided hingedly to connect rearwardly extending temples **44**, **46** with laterally spaced regions of dual eyewires **58**, **60** such that the eyewear, e.g. EC eyewear **38**, easily and conveniently can he deployed and stowed. Mirror-image hinge assemblies **40**, **42** include first hinge members **62**, **64** projecting rearwardly from a lateral region, or corner block, of a corresponding eyewire such as bridge-connected eyewires **58**, **60**, and a hingedly matable forward terminal end of a corresponding temple such as temples **44**, **46**, with interleaving fingers thereof being pivotally securable by a pin extending through aligned holes thereof, as is known.

Importantly, and referring now to FIGS. **4** and **4A**, invented hinge assemblies **40**, **42** include in a forward region of temples **44**, **46** corresponding leaf springs **66**, **68** that lie nominally in a plane of an inner wall of a corresponding tube such as tubes **48**, **50** and that forms a forward, terminal extent thereof. Forward, terminal ends of leaf springs **66**, **68** will be understood to be capable of being temporarily deflected outwardly from their nominal position of co-planarity with the outer side walls of tubes **48**, **50** by forces exerted thereon by one or more of the fingers of rearwardly projecting members **62**, **64** of eyewires **58**, **60**. As may be seen from FIG. **4**, outer expanses **70**, **72** of members **62**, **64** each define a first generally flat surface region of the projection, e.g. surface region **62***a* of member **62**, that acts as a cam surface followed by the corresponding, resiliently deflectable leaf spring, e.g. leaf spring **66**.

The cams and cam followers, which are defined for example by leaf spring **66** formed within temple **44** and region **62***a* of corresponding projecting member **62** of eyewire **58**, are configured to ensure that, when the temples **44**, **46** pivotally are overextended such that their rearward extreme ends **44***a*, **46***a* are maximally spaced from one another, they are urged or biased to return to a nominally 90° pivotal orientation relative to the plane of eyewires **58**, **60**.

Preferably, projections **62**, **64** further include second flat regions **62***b*, **64***b* that each also act as camming surfaces when the eyewear is folded into what will be referred to herein as a stowing condition thereof in which the eyewear is generally flat. In accordance with this feature of the invention, leaf springs **66**, **68** act as cam followers to bias or urge temples **44**, **46** into such stowing condition, while providing protection for lenses **32**, **34** from inadvertent and potentially damaging impact by temple tips, or extreme rearward temple ends, **44***a*, **46***a*. Second flat regions **62***b*, **64***b* will be understood to be located on projections **62**, **64** such that leaf springs **66**, **68** lie flat thereagainst in a nominally closed condition of the eyewear in which the temple tips do not touch the corresponding lenses, e.g. EC lenses **34**, **32**, to which they are closely proximate.

The invention in one broader aspect now may be appreciated to be a pair of eyeglasses including a front piece **72** and a temple, or temple piece, such as temple piece **44** having a top surface **44***b*, a bottom surface **44***c* and a leaf spring **66** defining a side surface **44***d* of the temple piece, with the leaf spring being movable relative to the top and bottom surfaces to bias the temple piece into a predetermined open position indicated in FIG. **4** from an overextended open position, as is known, relative to the front piece.

Preferably, such front piece **72** includes structure **74** for receiving a lens such as lens **32** therein and a cam surface **76** operatively connected with, and projecting rearwardly from, the structure, wherein the temple piece is hingedly connected to the cam surface, as suggested by FIGS. **4** and **4A**. Also in accordance with the preferred embodiment, cam surface **76** includes a flat region **76***a* cooperable with the leaf spring thereby to bias the temple piece into such predetermined open position, also as shown. Finally, it is preferable that cam surface **76** includes a second flat region **76***b*

cooperable with the leaf spring thereby to bias the temple piece into a folded position relative to the front piece.

By another aspect of the invented eyeglasses pair, temple piece **44** further includes a first end **44***e* hingedly connected to front piece **72** and a second end **44***a* including a region **44***f* (refer also to region **46***f* of temple piece **46**) of protective coating to reduce or preferably eliminate lens scratching when the temple piece is in such folded position relative to structure **74**. This coating preferably is selectively formed in a distal, or rearward terminal, region of temple piece **44** as by selectively dipping a terminal end of temple piece **44** in a liquid urethane bath. Those of skill in the art will appreciate that such protective coating may be selectively formed to a greater or lesser extent, or may take thicker or thinner forms and may be formed of different materials that provide the desired resilient, non-abrasive protection for the lenses of the eyeglass pair, all within the spirit and scope of the invention.

Another important aspect of the invention focuses on the frame itself. Such an eyeglass frame F as is shown in FIGS. **4** and **4**A may be seen to include a front piece **72** including structure **74** for receiving a one or more lenses such as lens **32** therein, with the structure defining a first plane indicated at P_1 and with what will be referred to herein as a corner block **78** projecting laterally and rearwardly from the structure; and a temple piece **44** connected to the corner block, with the temple piece including a side wall **44***g* defining a second plane indicated at P_2 and leaf spring **66** defining a forward extension of the side wall such that the leaf spring such lies substantially within second plane. Such a leaf spring-equipped hinged corner assembly in a pair of eyeglasses is readily seen to provide unprecedentedly lightweight, hollow corner and temple piece structure that is compatible with aesthetic and functional demands placed upon not only the invented electrochromic eyewear but also upon conventional eyewear.

Preferably, the invented frame features symmetrically located corner blocks such as corner block **78** (formed as illustrated in upper and lower mating pieces the lower of which will be referred to herein as a rimlock member) including a flat region such as previously described flat region **62***a* of member **62** cooperable with the leaf spring thereby to bias the temple piece into a predetermined open position relative to the front piece. Preferably, each corner block includes a second flat region such as previously described flat region **62***b* of member **62** cooperable with the leaf spring thereby to bias the temple piece into a folded position relative to the front piece such that first plane P_1 is substantially parallel with second plane P_2. Of course, it is typical for the front piece to include one or more lenses positioned within corresponding eyewire regions of structure **74**. Thus, it is preferable for the temple piece to include at least an inner region **44***f* of resilient, e.g. elastomeric, coating positionable adjacent such lens when the temple piece is in a folded position. In this way, the coating prevents damage to the lens(es) that otherwise may be caused by pivoting of the temple piece into a closed, or flat, configuration of the eyewear, e.g. for stowage.

The invented optical frame assembly alternatively may be described as follows, again by reference to FIGS. **4** and **4**A. The frame assembly may be seen to include a front piece **72** including structure **74** for receiving a lens such as lens **32** therein, with the structure defining a first plane P_1, and a projection **80** attached to, and preferably integrally connected to, the structure and extending outwardly or rearwardly such that the projection **80** extends transversely relative to first plane P_1. The frame assembly also may be seen to include a temple member **44** defining a second plane P_2, with the temple member including a front region **44***e* having a side subregion **44***g* and a rear region **44***a*, the front region being pivotally mounted to the projection such that the temple member and the front piece define an angle θ therebetween, and such that said temple member is movable between a folded position wherein θ equals approximately 0°, a predetermined open position indicated in FIG. **4** wherein θ equals approximately 90°, and an overextended open position, as is known, wherein θ is greater than 90°.

Front region **44***e* further may be seen, perhaps best by reference to FIG. **4**A, preferably to include a leaf spring **66** extending within the plane of the side subregion when the temple member is in such predetermined open position or such folded position, with the leaf spring and the projection cooperating to bias the temple member into the illustrated predetermined open position from the illustrated overextended open position. Preferably, projection **80** includes a first flat region such as previously described region **62***a* of member **62** cooperable with leaf spring **66** thereby to bias the temple piece into such predetermined open position from such overextended open position. Also, preferably projection **80** includes a second flat region such as previously described region **62***b* of member **62** cooperable with leaf spring **66** thereby to bias the temple piece into such folded position.

From FIG. **4**A, those of skill in the art will appreciate that the symmetrically located right-cylindrical recesses formed in the upper and lower pieces of the corner blocks provide for the inclusion in power supply system **10** of further external components such as the external inductor described and illustrated in connection with FIG. **1**. Such, it will be appreciated, are interconnected in accordance with invention, via flex circuit **52**, suitably modified as needed to accommodate additional signal routing via printed flexible circuit conductors. Those of skill in the art also will appreciate that eyewires **58**, **60** may in alternative embodiments preferably are in the form of open loops, as illustrated by the through cut in the lateral, outer regions thereof, to enable removal and insertion of EC lenses **32**, **34**, with only minimal disassembly of eyewear **38**. Modifications to hinge assemblies **40**, **42** that further facilitate lens removal and insertion are within the spirit and scope of the invention.

Of course, in accordance with the preferred embodiment of the invented frame assembly, front piece **72** includes a lens positioned within the structure for receiving a lens, whether of the conventional or EC variety, whether prescription or not. As described above, preferably rear region **44***a* of the temple member includes an illustrated non-abrasive coating to reduce, and to the greatest extent possible to eliminate, lens scratching by the temple member. Those of skill in the art will appreciate that these improvements in eyewear frame assemblies are broadly applicable to conventional eyewear as well as to the invented EC eyewear illustrated herein, as will be described in more detail below.

In the EC eyewear context, the invention in one of its important aspects may be described as a pair of electrochromic eyeglasses including 1) a front piece **72** including two eyewires, or electrochromic-lens-receiving supports, **58**, **60** and a hollow bridge **84** connecting the supports, with the supports each including a recess such as recesses **58***a*, **60***a* extending around an internal surface of the supports' periphery, with each recess being configured for holding an electrochromic lens such as lenses **32**, **34**; 2) temple members **44**, **46** connected to either side of front piece **72** by a corresponding hinge such as hinge **40**, with each temple member including an elongate chamber such as chamber **88**

defined within tube **48** for enclosing a battery such as any of those described herein; and 3) a flex circuit assembly **90** (including flex circuit **52** as well as the above-described components mounted thereon) fitted within front piece **72**, the circuit assembly including a proximal active-component circuit region **92** (in which such components are mounted) for driving the electrochromic lenses.

Preferably, as is suggested by FIG. **5**, the circuit assembly includes plural-conductor regions **94**, **96** extending from the active-component circuit region in generally opposite directions for routing through the support recesses, around the eyewires for connection with the lenses and switches formed thereabout, through the hinges and at least partway into the chambers for electrical connection of batteries contained therein with the active-component circuit region of the flex circuit assembly. Those of skill in the art will appreciate from FIG. **4** the manner in which illustrated flex circuit **52** in its unfolded form external to front piece **72** and temples **44**, **46** in its assembled form has expanses **94**, **96** are routed through channels **58***a*, **60***a*, through hinge assemblies **40**, **42** and endcaps **54**, **56** into tubes **48**, **50** for connection with primary and secondary batteries **16**, **18** to render EC eyewear **38** operative.

Also preferably, flex circuit assembly proximal region **92** is positioned within bridge **84**, as described and suggested by the exploded assembly drawing of FIG. **4**. It is the form fittability of this proximal, most preferably substantially central, region wherein both integrated and discrete circuit components are interconnected that gives EC eyewear **38** made in accordance with its preferred embodiment its functionality and aesthetics.

With further regard to flex circuit assembly proximal region **92** in which the power supply and controller circuitry is assembled and preferably potted, it will be appreciated that a printed circuit board (PCB), e.g. so-called FR-4, is used in one exemplary embodiment, while it is within the spirit and scope of the invention to mount the circuitry directly to the flex circuit in region **92** by the use of techniques similar to those of known surface mount technology (SMT). The advantage of mounting the circuit components on a PCB and, in turn, mounting the PCB on the flex circuit in region **92**—by a process that is analogous to known chip-on-board hybrid circuit fabrication—is design flexibility and adaptability to any one of various battery subsystems that might be available or desirable and ease and low cost of manufacture.

As may be seen from FIG. **4**, flex circuit assembly **90** preferably further includes in plural-conductor regions **94**, **96** thereof lens-contacting land regions **98**, **100** for operative electrical connection with one such electrochromic lens such as lens **32**. Those skilled in the art will appreciate that preferably lens-contacting regions **98**, **100** are formed of gold-plated copper, thereby to ensure reliable electrical contact and to reduce the tendency of the copper to corrode, especially under humid conditions. Skilled persons also will appreciate that elastomeric conductive strips or pads may be used to great advantage between the lenses' edges and so-called "lens-contacting" regions **98**, **100** to provide in this region of electrical contact increased reliability and durability. Such strips are available, for example, from Shin-Etsu Polymer America, Inc. in the form of a "Shin-Flex MAF-Connector", or similar anisotropic connector sheet.

Preferably, each of illustrated recesses **58***a*, **60***a* has substantially enclosed lengthwise peripheral regions such as region **58***aa* of recess **58***a* (refer momentarily to FIG. **4**B) for capturing the flex circuit assembly within such supports, as well as substantially open regions such as region **58***ab* (refer momentarily to FIG. **4**C) interposed the enclosed peripheral regions for providing such electrical contact between lenses positioned within the supports and the land regions of the flex circuit assembly. Such interspersed flex circuit capture and access regions provide reliable electrical contact while rendering EC eyewear **38** easily and inexpensively manufactured.

Referring still to FIG. **4**, the laterally spaced manually formable temple tips are provided immediately behind their respective battery tubes **48**, **50** to contribute to the formation of the eyewear's temples, indicated at **44**, **46**. Importantly, in accordance with the preferred embodiment of the invention, the temple tips are coated at least in a rearward, inner region thereof with a non-abrasive, somewhat compliant, e.g. polymeric, material that protects the lenses from wear or damage when temples **44**, **46** are folded against, or otherwise inadvertently are made to contact, the lenses. In one embodiment of the invention, such coated regions of temples **44**, **46** are formed by dipping at least approximately 3.8 cm (1.5 inches) of the terminal regions thereof in a liquid urethane bath to produce a thin, protective, outer layer that resists abrasive or high-impact contact between the temple tips and the lenses.

Referring more specifically now to invented EC eyewear **38**, a flex circuit **52** may be seen to be used to interconnect end caps **54**, **56** and their connected batteries with switches S1, S2 and the power supply and controller electronics disposed within a bridge **84** that interposes and connects right and left eyewires **58**, **60**. Preferably, as shown in FIG. **4**, controller electronics including all components shown in FIG. **1** except batteries **16**, **18** switches S1, S2, lenses **32**, **34** and the distal regions of flex circuit **52** are configured and sized to be contained within bridge **84**. In accordance with the preferred embodiment of the invention, it has been demonstrated possible to micro-miniaturize such controller electronics, including relative large inductor L1, and to fix the same in potting compound to form-fit it within the tiny volume, e.g. less than approximately 0.18 ml, of an interior void formed within bridge **84**, as will be described in more detail below.

As illustrated in FIG. **4**, all remaining components also are miniaturized and formed to fit within voids and channels formed within the frame of eyewear **38**. The result is a lightweight, aesthetically pleasing pair of EC eyeglasses compatible with non-prescription as well as prescription EC-coated lenses. The high transmissivity-switching speed and transmissivity range, as well as the durability, achieved in invented lightweight EC eyewear **38** is unprecedented. Importantly, the variety of battery options made possible by the invented cell configurations comprehended by the invented micro-electronic controller renders EC eyewear **38** made in accordance with the invention extremely flexible and adaptable to future developments in microelectronics battery power.

Those skilled in the art will appreciate that relatively low-capacity battery configurations also are accommodated by the invention. For example, an even lighter weight and smaller frame, for persons of smaller build, are possible with the described dual lead acid battery configuration in which the lead acid cells may be made of approximately one-half the length of that shown in FIG. **4**. Although such a battery subsystem requires frequent charging, such is made possible by the external battery-charging EC eyewear case that is described below by reference to FIGS. **5** and **6**. Such lead acid battery-powered EC eyewear requires periodic, e.g. daily, recharging, which may be accomplished very simply

by fitting the assembled eyewear within the case as described and illustrated below. Thus, EC eyewear frames of various weights and sizes will be seen to be within the spirit and scope of the invention.

Importantly, FIG. **4** shows aspects of the invented microelectronic power management system including invented flex switches **S1**, **S2** and invented flex circuit **52**. Flex circuit **52** including SMT-mounted circuit components on a tiny FR-4 PCB is employed in accordance with the invention for power and signal distribution in lieu of one or more larger PCBs and wiring harnesses due to the volume restrictions imposed on EC eyewear frames. Similarly, flex switches **S1**, **S2** are employed instead of conventional push button microswitches so to increase user comfort and convenience in operating the switches to switch the EC lenses between their polar transmissivity states.

Importantly, in accordance with the preferred embodiment of the invention, switches **S1**, **S2** are integrally formed as a part of flex circuit **52**, thereby avoiding a mechanical interconnection therebetween and attendant weight and cost increases and a reduction in reliability. Also by the preferred embodiment, switches **S1**, **S2** are configured to be sandwiched between an eyewire and a bevel-flattened edge region (not shown, in FIG. **4**, for the sake of clarity and simplicity) of its held lens, preferably in spaced upper regions thereof. While not illustrated in detail in FIG. **4**, the detailed structure of switches **S1**, **S2** will be understood preferably to include a post having an enlarged switch-depression end, with the post extending through the holes in frame F of eyewire **58** into enlarged endcaps that act as the externally accessible push buttons that are shown. The holes through which the posts extend may be sealed, if desired, by an O-ring gasket beneath the enlarged push button end of the switches. Operation of the switches to switch the lenses requires only momentary, minimal effort on the part of the wearer by way of relatively light gripping pressure by which the switches individually or collectively, e.g. simultaneously, may be actuated. Thus, switching of the lenses of the EC eyewear requires unambiguously positive contact pressure in one or both of two spaced regions of the frame, e.g. in the vicinity of frame-mounted push buttons **102**, **104** but requires little or no thought or effort.

Either one of, and preferably both of, switches **S1**, **S2** then acts in accordance with the invention as an operatively connected switch formed between eyewear frame F and one or both of EC lenses **32**, **34**, with the connected switch including a first flexible, conductive (e.g. gold-plated copper) expanse such as expanse **102***a* adjacent frame F and a second flexible conductive expanse such as expanse **102***b* adjacent the one or both lenses. Such first and second expanses **102***a*, **102***b* are pre-formed normally (as by folding them into a lapped position during assembly) to produce a first condition of the connected switch corresponding to a first defined transmissivity of lenses **32**, **34** and to produce under manual pressure on frame F a momentary second condition of the switch corresponding to a second defined transmissivity of lenses **32**, **34**.

As noted, in the preferred embodiment of the invention and for the purpose of positive and unambiguous, intended rather than incidental, actuation thereof, two or more of such lens-connected switches are mounted in frame F, with such two switches being operatively connected (via control logic **28**, refer momentarily to FIG. **1**) to one or both lenses **32** and **34**, wherein each of the switches is formed between eyewear frame F, or more particularly an eyewire such as eyewire **58**, and corresponding EC lens such as lens **32**, with each of such switches including a first flexible conductive expanse **102***a* adjacent frame F and a second flexible conductive expanse **102***b* adjacent the lens.

As may be seen by momentary reference collectively to FIGS. **1** and **4**, first and second expanses **102***a*, **102***b* preferably are pre-formed (upon assembly of EC eyewear **38**) normally to produce a first condition, e.g. open or non-conductive, of each or both of switches **S1**, **S2** corresponding to a first defined transmissivity, e.g. greater than approximately 70%, of the lens and to produce under manual pressure on, e.g. a push button **102** mounted in, frame F a momentary second condition, e.g. closed or conductive, of each or both of such switches corresponding to a second defined transmissivity, e.g. less than approximately 15%, thereof. Expanses **104***a*, **104***b* are similarly formed to produce second push button **104**.

As is suggested by FIG. **4**, switches **S1**, **S2** disposed within eyewire **58** are operable by manual gripping pressure on frame F, e.g. on eyewire **58** in the vicinity of push buttons **102**, **104**, in at least two spaced regions of frame F to actuate lens driver **30** via control logic **28** responsive to closure of one or both switches. Each operatively connected switch, in accordance with the preferred embodiment of the invention and by virtue of its implementation as a flex circuit, is responsive to such manual, e.g. push button, pressure optimally believed to be approximately five ounces. Within the spirit and scope of the invention, switches **S1**, **S2** and corresponding push buttons **102**, **104** may be located elsewhere in the frame, e.g. in the vicinity of the illustrated corner blocks or on the temples. Also within the invention, switches **S1** and **S2** may be implemented more conventionally, e.g. electronic, e.g, touch-sensitive, or electromechanical, e.g. microswitch, devices may be used.

A mere brush of the wearer's hand in the vicinity of either of switches **S1**, **S2** will not inadvertently actuate them to switch the transmissivity of the EC lenses, while the slightest intended gripping of frame F, e.g. in the vicinity of push buttons **102**, **104** reliably will switch the lenses, thereby producing easily but firmly controllable operation of the EC eyewear. Moreover, such pressure as might inadvertently impact on switches **S1**, **S2** in the event that EC eyewear **38** is laid upside-down on a flat surface is insufficient to switch the transmissivity of lenses **32**, **34**. Accordingly, inadvertent switching is avoided in foreseeable situations.

Each of switches **S1**, **S2** may be seen to include plural, e.g. dual, elongate, flexible circuits or conductor expanses **102***a*, **102***b* extending along frame F and around lens **32**, with the flexible circuit having pre-formed therein (upon assembly of EC eyewear **38**) at least two overlapping conductive termini such as termini **102***a*, **102***b* forming the dual contacts of the respective connected switch. Termini **102***a*, **102***b* may be seen to be disposed in a first lapped relationship between frame F and lens **32**, thereby defining a first, e.g. open, condition of the respective connected switch. On the other hand, termini **102***aa*, **102***ba* in a second lapped relationship therebetween with external manual pressure applied will be understood to define a second, e.g. closed, condition of the respective switch, thereby enabling such switching of the transmissivity of the one or more lenses such as lens **32** (via CONTROL LOGIC **28** and LENS DRIVER **30** responsive thereto).

In accordance with the preferred embodiment of the invention, controller **12**—including all of internal BATTERY CHARGER **26** (including POWER CONVERTER **22** and CONTROL CIRCUITRY **36**), CONTROL LOGIC **28** and LENS DRIVER **30** for driving a pair of EC lenses **32**, **34**—are integrated into a single integrated circuit (IC)

dimensioned to be less than approximately 0.18 mm by 0.28 mm (70 mils by 110 mils). The IC and external discrete components including the variously illustrated resistors and capacitors then are adhered—either directly or on a carrier such as the disclosed tiny PCB—to a proximal, and preferably central, region of flex circuit **52**. The only non-integrated component of the microcontroller, i.e. inductor **L1**, is soldered to solder pads provided on the PCB. Controller **12** including its external, integrated passive components and inductor **L1** thus is contained within a tiny volume of preferably less than approximately 0.15 ml, more preferably less than approximately 0.10 ml, even more preferably less than approximately 0.05 ml and most preferably less than approximately 0.025 ml, thereby providing extremely high functional density in microelectronic applications such as the illustrative EC eyewear.

Such a tiny volume for the microcontroller described immediately above provides advantages of functional density and low-power efficiency that is unprecedented in microelectronics. Such is fittable within bridge **84** of EC eyewear **38** very simply by potting it into potting compound within the void formed in the eyewear's bridge. A bridge cover (not shown) optionally may he provided to enclose this circuitry within bridge **84**. As may be seen from FIG. **4**, bridge **84** preferably is provided with dual external electrical contacts **106**, **108** for the series-connected dual lead-acid cell, or other suitable rechargeable-cell, batteries of one of the disclosed battery subsystems, for external charging by a battery charging eyewear case now to he described.

Turning collectively now to FIGS. **5** and **6**, it may be seen that FIG. **5** is an isometric view of an eyewear case **110** that securely and protectively cradles and covers eyewear **38'** (wherein it will be appreciated that eyewear **38'**, not shown for the sake of simplicity and clarity, may be identical with eyewear **38** described and illustrated above as being powered by dual lead acid batteries) while charging its batteries. Those skilled in the art will appreciate that case **110** may take any utilitarian and ornamental form, as suggested by its dashed outline. Importantly to this external battery charger aspect of the invention is means by which eyewear **38'** is grippingly engaged adjacent its bridge **84** such that its dual batteries, e.g. dual lead acid batteries **16**, **18** are charged, without even partial disassembly of eyewear **38'** being required.

Preferably, what will be referred to herein as battery contact means or structure indicated at **112** includes mechanical bridge-gripping structure **114** and a pair of electrical contacts or regions **116**, **118** configured for matingly electrically engaging corresponding battery circuit contacts or regions **106**, **108** of eyewear **38'**. Preferably, bridge-gripping structure **114** is formed of a polymer casting **120** into which a generally C-shaped spring clip **122** is insert molded, as shown. Those of skill in the art will appreciate that such bridge-gripping structure may take any of a variety of forms, and may be formed by any suitable means, to provide, within the spirit and scope of the invention, for the secure gripping of bridge **84** of EC eyewear **38'**.

Operatively connected to electrical contacts **116**, **118** and preferably located within eyewear case **110** is an external battery CHARGER circuit **124** packaged in any suitable form, as by a discrete or integrated circuit (IC) devices interconnected as by use of a PCB powered by a battery B_1. It will be appreciated that any suitable electromechanical structure may be provided, within the spirit and scope of the invention.

Referring now specially to FIG. **6**, the operation of external battery CHARGER circuit **124** will be described, with the CHARGER portion of the circuit described first. In accordance with the preferred embodiment, a replaceable 9 V battery B_1 is connected across the negative SHDN (shutdown) and positive VCC (supply) inputs to a conventional voltage regulator/supply IC **126** such as a ICL7663 (a CMOS programmable "micropower" linear voltage regulator) available from Maxim Integrated Products, Inc. of Sunnyvale, Calif. or from Harris Semiconductor of Melbourne, Fla. Preferably, regulator/supply IC **126** is temperature compensated by connecting the VTC (voltage temperature compensation) input through a resistor **R1** to a sense voltage divider comprising resistors **R2**, **R3** and a potentiometer **K1**. Such establishes, in accordance with a preferred embodiment of the invention, an approximately −25 mV/°C. temperature compensation factor, although of course any suitable setting may be used.

It will be understood from the circuit diagram that series-connected lead acid batteries **16**, **18** within eyewear **38'** are connected across such voltage divider to the SENSE input of regulator/supply IC **126** when eyewear **38'** is placed within case **110**. As shown in FIG. **6**, the VOUT1 and VOUT2 outputs of regulator/supply IC **126** are connected via a resistor **R4** to the sense line, which also is connected to VCC via a resistor **R5**.

In one preferred embodiment of the invention, preferably precision (≦1%) resistors **R1**, **R2** are 2.7 megohm (MΩ) and preferably precision resistor **R3** is 1.0 MΩ. In that embodiment, **R4** is 470Ω and **R5**, **K1** are 100 kilohm (kΩ). Potentiometer **K1** will be understood to provide an adjustable float charge voltage between contacts **116**, **118** for charging the lead acid batteries within eyewear **38** at a desired current and voltage. The use of a battery B_1 renders battery CHARGER within case **110** portable, and the use of a replaceable battery renders the same easily and inexpensively maintained. Those of skill in the art will appreciate that, within the spirit and scope of the invention, different battery charger circuit topologies, and/or alternative component types and values, may be used.

The SENSE input to regulator/supply IC **126**, which is connected to the positive one of contacts **116**, **118** and thus represents the output, or charging, current line, and with a connected lead acid battery pair thereat also represents the output thereof under load, is connected via resistors **R6**, **R7** as shown to the positive input of a first operational amplifier (op amp) **A1**. The negative input of first op amp **A1** is connected to the VTC input to regulator/supply IC **126**. Thus, op amp **A1** and its closely associated support circuitry act as a load voltage COMPARATOR to detect when a connected lead acid battery pair presents a load to external battery CHARGER, i.e. to detect when external battery CHARGER is charging the eyewear's lead acid batteries.

The output of first op amp **A1** is connected through a filter network comprising a series resistor **R8** and VCC-biased capacitor **C1** to the positive input of a second op amp **A2** the negative input of which is connected via resistor divider comprising resistors **R9**, **R10** between VCC and ground. First and second op amps **A1**, **A2** preferably have their offset adjustment inputs grounded, as indicated in FIG. **6**.

Importantly, first and second op amps **A1**, **A2** have their bias current setting inputs grounded via high-resistance resistors **R11**, **R12**. The output of second op amp **A2** drives the base of a first transistor **Q1** via a series resistor **R13**, the base being biased to VCC via a resistor **R14**. The collector of first transistor **Q1** directly drives the base of a second transistor **Q2** and drives the emitter of transistor **Q2** via a resistor **R15**. Transistor **Q2**'s collector is fed back to the base

of transistor Q1 and transistor Q2's emitter is connected via a light-emitting diode (LED) D1 to the input of second op amp A2. Persons skilled in the art will appreciate that second op amp A2, transistors Q1, Q2 and LED D1 and their closely associated support circuitry form an extremely low-current monostable MULTIVIBRATOR/DRIVER and cause LED D1 visibly to blink at a desired frequency and duty cycle determined by the values of the surrounding components. COMPARATOR and MULTIVIBRATOR/DRIVER together thus are labelled ANNUNCIATOR in FIG. **6**, by which broadly is meant audio, visual or other means of indicating the operational status of CHARGER and/or EC eyewear **38'**.

In one exemplary embodiment of the invention, preferably precision resistor R6 is 7.5 MΩ and preferably precision resistor R7 is 1.13 MΩ. In such embodiment, resistor R8 is 430 kΩ and capacitor C1 is 0.47 μF. Resistors R9, R11, R12 are 39 MΩ. R10 is 18 MΩ, R13 is 18 kΩ, R14 is 4.7 kΩ and R15 is 10 kΩ. Op amps A1, A2 preferably are CA3440Ms and transistors Q1, Q2 are 2N3904s. Persons skilled in the art will appreciate that, within the spirit and scope of the invention, different circuit topologies, devices and component values may be used.

It may he seen then that ANNUNCIATOR provides a preferably visible, but ultra-low-current indication to the user of battery charger case **110** that proper contact is made between contacts **116**, **118** of case **110** and between corresponding terminals **106**, **108** located in bridge **84** of eyewear **38'**. LED D1 thus reassures the user that recharging is taking place, and informs the user when recharging is complete. Yet the unique low-power COMPARATOR and MULTIVIBRATOR/DRIVER circuits that collectively form ANNUNCIATOR, as described and illustrated by reference to FIG. **6**, does so while drawing, or consuming, current from battery B_1 at a level of preferably less than approximately 1 milliampere (mA), more preferably less than approximately 100 microamperes (μA) and most preferably only approximately 50 microamperes (μA), each of which represents a tiny fraction of the capacity of battery B_1. As a result, battery B_1 is virtually untaxed by ANNUNCIATOR so that its energy is used instead substantially solely to recharge the lead acid battery pair within eyewear **38'**.

It is estimated that ANNUNCIATOR has the capacity visibly, constantly to blink LED D1 for nearly eight years (subject, of course, to the shelf life of battery B_1, which may be only approximately five years). Obviously, with LED D1 blinking typically only when eyewear **38'** is properly situated within case **110** for battery charging or recharging, the effective life of ANNUNCIATOR is practically unlimited, and virtually all of the capacity of battery B_1 is dedicated to its primary purpose of recharging.

As illustrated and described herein, external battery, or CHARGER circuit, produces up to approximately 1.0 mA of charging current at 2.2–2.4 V (adjusted by setting potentiometer K1) at contacts **116**, **118** and is capable of recharging fully depleted lead acid batteries **16**, **18** of eyewear **38'** in less than approximately eight hours and preferably less than approximately five hours, while producing a visual indication of when it is charging. It is believed that external battery CHARGER circuit would fully recharge depleted lead acid battery pairs within eyewear **38'**, for more than approximately six months of normal use of eyewear **38'** and at normal charging frequency, before replacement of battery B_1 were required.

The invention now may he seen to involve an electrochromic eyewear system that includes not only 1) electrochromic eyewear **38'** described above but also 2) an external battery charger, e.g. battery CHARGER circuit therefor, with the charger having an electro-mechanical configuration for conductive electrical connection for charging the eyewear's one or more batteries and a mechanical connection for gripping the eyewear's frame during the charging thereof.

As described and illustrated herein, eyewear **38'** preferably includes **1***a*) an eyewear frame such as frame F; **1***b*) an electrochromic lens such as lens **32** mounted in the frame, with the lens being capable of switching its visible light transmissivity; **1***c*) one or more switches such as switches S1, S2 mounted in the frame, with at least one of the switches being operatively connected to the lens, e.g. as illustrated in FIG. **1**; and **1***d*) a power supply such as power supply **10** contained within the frame, with the power supply including a controller such as controller **12**, at least one lead acid battery for supplying current to the controller and for supplying switching current through the connected switch to the lens.

Preferably, an external battery charger, or battery CHARGER circuit, also forms a part of such an EC eyewear system. Such an external charger is integrally housed in an eyewear enclosure, or case **110**, as illustrated in FIG. **5**. Also preferably, the external battery charger is battery operable and thus portable without external connection, for example, to an AC power source or converter. As described above in accordance with the preferred embodiment, battery charger, or battery CHARGER circuit, includes ANNUNCIATOR for communicating to a user when the charger is supplying charging current to the rechargeable batteries of eyewear **38'**.

As described and illustrated herein, ANNUNCIATOR preferably is optical and, accordingly, such communicating is visual. Those of skill in the art of course will appreciate that such communicating with a user via an annunciator instead might be aural, as by an intermittent beeper. It also might take different visual forms, e.g. it might include a textual or graphic display for showing the status of the eyewear charging process, e.g. via a bar graph.

Importantly, in accordance with the preferred embodiment of the invention, when battery charger, or battery CHARGER circuit, is battery operable, ANNUNCIATOR is operated intermittently, i.e. at a predetermined frequency and duty cycle, thereby to conserve power on the external battery-operable battery CHARGER.

While the present invention has been shown and described with reference to the foregoing preferred embodiment, it will be apparent to those skilled in the art that other changes in form and detail may be made therein without departing from the spirit and scope of the invention as defined in the appended claims.

We claim:

1. An eyeglass frame having a front piece including a pair of lens rims, a corner block connected to and projecting rearwardly from each of said lens rims; a temple piece for connection to each of said corner blocks; each of said temple pieces having a front region with an end for connection to said corner block and a rear region having an ear piece; pivot means for pivotally connecting said end of said front region of said temple piece to said corner block; said front region of said temple piece having a top wall, a bottom wall spaced from said top wall, an inner side wall and an outer side wall spaced from said inner side wall, said side walls extending between said top wall and said bottom wall to form a hollow chamber in said temple piece for receiving a battery; a portion of said outer side wall forming a leaf spring, said leaf

spring having a free terminal end flexible relative to said outer side wall; cam means on said corner block for contacting said free terminal end of said leaf spring when said temple piece is pivoted about said pivot means relative to said corner block; whereby said temple piece is pivotable between a folded position substantially adjacent to said front piece, a normal open position at a substantially 90° angle to said front piece and an overextended open position relative to said front piece at an angle in excess of 90°, wherein said free terminal end of said leaf spring contacts said cam means on said corner block when said temple piece is pivoted relative to said corner block to bias said temple piece into said normal open position from said overextended open position.

2. An eyeglass frame as set forth in claim **1** wherein said cam means includes a first flat region for contacting said leaf spring to bias said temple piece into said normal open position.

3. An eyeglass frame as set forth in claim **2** wherein said cam surface includes a second flat region for contacting said leaf spring to bias said temple piece into said folded position substantially adjacent to said front piece.

4. The eyeglass frame as set forth in claim **1** wherein said ear piece of said rear region of said temple piece includes a protective coating for reducing lens scratching when said temple piece is in said folded position substantially adjacent to said front piece.

5. An eyeglass frame as set forth in claim **1** including a lens located in each of said lens rims and said rear region of said temple piece includes a protective coating on said ear piece to reduce scratching of said lenses when said temple piece is in said folded position substantially adjacent to said front piece.

6. An eyeglass frame as set forth in claim **5** wherein said lenses are electrochromic lenses.

7. A temple piece for an eyeglass frame having a front piece including a pair of lens rims, said temple piece having a front region with an end for connection to a lens rim and a rear region having an ear piece; pivot means at said end of said front region for pivotally connecting said end of said front region of said temple piece to an eyeglass frame, said front region of said temple piece having a top wall, a bottom wall spaced from said top wall, an inner side wall and an outer side wall spaced from said inner side wall, said side walls extending between said top wall and said bottom wall to form a hollow chamber in said temple piece for receiving a battery, a portion of said outer side wall forming a leaf spring having a free end flexible relative to said outer side wall, whereby said leaf spring functions to bias said temple piece into a normal open position relative to an eyeglass frame.

8. A temple piece as set forth in claim **7** wherein said ear piece of said rear region of said temple piece includes a protective coating to reduce lens scratching when said temple piece is in a folded position substantially adjacent to the front piece of an eyeglass frame.

9. An eyeglass frame having a front piece including a pair of lens rims, a corner block connected to and projecting rearwardly from each of said lens rims; a temple piece for pivotal connection to each of said corner blocks; each of said temple pieces having a front region with an end for connection to said corner block and a rear region having an ear piece; pivot means for pivotally connecting said end of said front region of said temple piece to said corner block; said front region of said temple piece having wall means forming a hollow chamber in said temple piece adapted to receive a battery; a portion of said wall means forming a leaf spring, said leaf spring having a free terminal end flexible relative to said wall means; cam means on said corner block for contacting said free terminal end of said leaf spring when said temple piece is pivoted about said pivot means relative to said corner block; whereby said temple piece is pivotable between a folded storage position substantially adjacent to said front piece, a normal open position at a substantially 90° angle to said front piece and an overextended open position relative to said front piece at an angle in excess of 90°, wherein said free terminal end of said leaf spring contacts said cam means on said corner block when said temple piece is pivoted relative to said corner block to bias said temple piece into said normal open position from said overextended open position.

10. An eyeglass frame as set forth in claim **9** wherein said cam means includes a first flat region for contacting said leaf spring to bias said temple piece into said normal open position.

11. An eyeglass frame as set forth in claim **10** wherein said cam surface includes a second flat region for contacting said leaf spring to bias said temple piece into said folded position substantially adjacent to said front piece.

12. The eyeglass frame as set forth in claim **9** wherein said ear piece of said rear region of said temple piece includes a protective coating for reducing lens scratching when said temple piece is in said folded position substantially adjacent to said front piece.

13. An eyeglass frame as set forth in claim **9** including a lens located in each of said lens rims and said rear region of said temple piece includes a protective coating on said ear piece to reduce scratching of said lens when said temple piece is in said folded position substantially adjacent to said front piece.

* * * * *