UNITED STATES PATENT AND TRADEMARK OFFICE

BEFORE THE PATENT TRIAL AND APPEAL BOARD

COMCAST CABLE COMMUNICATIONS, LLC,
Petitioner,

v.

ENTROPIC COMMUNICATIONS, LLC.,
Patent Owner.

Case IPR2025-00180
Patent 11,785,275

PATENT OWNER'S RESPONSE

TABLE OF CONTENTS

Page

I. INTRODUCTION 1

II. ZHANG IS THE PRIOR ART CONSIDERED AND REJECTED DURING PROSECUTION BECAUSE IT HAS A FUNDAMENTALLY DIFFERENT ARCHITECTURE FROM THE PATENT. 5

A. Unlike The '275 Patent, Zhang Extracts All Channels, Both Desired And Undesired, From The Digitized Input Signal Without Any Selection. 6

B. Zhang Was Considered And Rejected During Prosecution Because It Does Not "Select[] Desired Channels From The Digitized [Input] Signal." 10

III. PETITIONER FAILS TO SHOW "SELECTING, BY A DIGITAL FRONTEND (DFE) … THE PLURALITY OF DESIRED CHANNELS FROM THE DIGITIZED SIGNAL" (ALL CLAIMS, ALL GROUNDS). 13

A. Petitioner's Reliance On Channels C_1-C_n As The Claimed "Plurality Of Desired Channels" Fails. 14

1. Zhang's Channels C_1-C_n Are All Channels In The Entire Signal Band That Are Indiscriminately Demultiplexed Without Any Selection. 15

a. Zhang And Its Prosecution History Expressly Teach That Channels C_1-C_n Are All Channels In The Entire Signal Band, Both Desired And Undesired. 15

b. Petitioner's Arguments Are Inconsistent With Zhang. ..21

c. Zhang Channels C_1-C_n Are Not "Desired Channels" Under Petitioner's Expert's Interpretation Of That Phrase. 32

2. Petitioner Fails To Show Other Claim Limitations If It Relies On Zhang Channels C_1-C_n As The Claimed "Desired Channels" 35

B. Petitioner's Reliance On Channels D_1-D_n As The Claimed "Desired Channels" Fails. 38

1. Zhang's Channels D_1-D_m Are Not Selected "From The Digitized Signal" As Claimed. 39

2. Zhang's Channels D_1-D_m Are Not Selected "From The Digitized Signal" Under Petitioner's Construction Of "Selecting." 47

3. Zhang Channels D_1-D_m Are Not Shown To Be Selected By A "Digital Front End" 49

IV. CONCLUSION 56

TABLE OF AUTHORITIES

Page(s)

COURT DECISIONS

Amgen, Inc. v. Hoechst Marion Roussel,
126 F. Supp. 2d 69 (D. Mass. 2001) 4

Clare v. Chrysler Group LLC,
819 F.3d 1323 (Fed. Cir. 2016).....47

Curtiss-Wright Flow Control Corp. v. Velan, Inc.,
438 F.3d 1374 (Fed. Cir. 2006).....47

Dynamic Drinkware, LLC v. Nat'l Graphics, Inc.,
800 F.3d 1375 (Fed. Cir. 2015).....54

Eaton Corp. v. Rockwell Int'l Corp.,
323 F.3d 1332 (Fed. Cir. 2003).....41

In re Facebook, Inc.,
743 Fed Appx. 998 (Fed Cir. 2018) 38

In re Felton,
484 F.2d 495 (CCPA 1973) 38

Intelligent Bio-Sys., Inc. v. Illumina Cambridge Ltd.,
821 F.3d 1359 (Fed. Cir. 2016).....55

In re Magnum Oil Tools Int'l, Ltd.,
829 F.3d 1364 (Fed. Cir. 2016).....54

NTP, Inc. v. Research In Motion, Ltd.,
418 F.3d 1282 (Fed. Cir. 2005).....41

Proveris Sci. Corp. v. Innovasystems, Inc.,
739 F.3d 1367 (Fed. Cir. 2014).....40

SightSound Techs., LLC v. Apple Inc.,
809 F.3d 1307 (Fed. Cir. 2015) 47

PTAB DECISIONS

DISH Network LLC v. Sound View Innovations LLC,
IPR2020-01035, Paper 19 (Jan. 19, 2021) 49

Google LLC v. Neonode Smartphone LLC,
IPR2021-01041, Paper 52 (Jan. 11, 2023) 49

Hulu, LLC v. Sound View Innovations, LLC,
IPR2018-00582, Paper 34 (August 5, 2019) (informative) 55

STATUTES

35 U.S.C. §316 49

REGULATIONS

37 C.F.R. § 42.104 49

EXHIBIT LIST	
2001	Table Of Parallel Petitions Filed By All Petitioners (July 16, 2019-January 31, 2025) [All-Parallel-Petitions]
2002	Table of All Petitions Filed By Comcast (As Petitioner or RPI) (2016-2025) [All-Comcast-Petitions]
2003	PTAB Multiple Petitions Study [Multiple-Petitions-Study]
2004	PTAB Multiple Petitions Study Executive Summary [Executive-Summary]
2005	FreeWheel About Webpage (www.freewheel.com/about)
2006	Declaration of Kenneth K. Wang [Wang-Decl.]
2007	Director Vidal's June 21, 2022, Memorandum Regarding Discretionary Denial With Co-Pending District Court Litigation[Interim-Denial-Memo]
2008	Reserved
2009	Email Request For Director Review [PainTEQ-Email-Request]
2010	Formal Request For Director Review [PainTEQ-Rehearing-Request]
2011	Declaration of Nathan Lowenstein In Support Of *Pro Hac Vice* Admission
2012	Exhibit 2012 To Deposition Of David Lett Dated July 23, 2025: Errata For Depositions Dated December 10-11 2024
2013	Declaration of Samuel H. Russ, Ph.D. [Russ-Decl.]
2014	Curriculum Vitae of Samuel H. Russ, Ph.D. [Russ-CV]
2015	European Patent Application No. 02759732.7.2415 Communication From Examining Division [EPO-Communication-Annex]

2016	European Patent Application No. 02759732.7.2415 Reply To Communication From Examining Division [Zhang-EPO-Reply]
2017	European Patent Application No. 02759732.7.2415 Intent To Grant European Patent [EPO-Grant-Intent]
2018	U.S. Patent 11,381,866 [’866-Patent]
2019	Deposition Of David Lett Dated December 10, 2024 [Lett-Depo.]
2020	Deposition Of David Lett Dated December 11, 2024 [Lett-Depo.]
2021	Deposition Of David Lett Dated May 20, 2025 [Lett-Depo.]
2022	Deposition Of David Lett Dated July 23, 2025 [Lett-Depo.]
2023	U.S. Pat. No. 6,704,372 [Zhang-Patent]
2024	Information Disclosure Statement submitted during the prosecution of the ’275 patent [IDS]
2025	Notice Of Allowance for the ’275 patent [NOA]
2026	*Comcast Cable Communications LLC v. Entropic Communications LLC*, IPR2024-00432, Paper 28 [Comcast-Reply]
2027	*Comcast Cable Communications LLC v. Entropic Communications LLC*, IPR2024-00438, Exhibit 1078 [Lett-Decl.]

I. INTRODUCTION

All of Petitioner's grounds are founded upon Zhang. But Zhang is not a new reference. It is a recycled reference that was considered and rejected during prosecution of the '275 patent as it has a fundamentally different architecture. Not surprisingly, Petitioner fails to show that Zhang discloses or renders obvious the very limitation that was found to be missing during prosecution.

While both Zhang and the '275 patent involve systems that receive an input signal and output a plurality of desired channels, the method by which they achieve this result is decisively different. Specifically, in the '275 patent, desired channels are selected and extracted from the digitized input signal. In accord, the '275 patent recites "selecting … the plurality of desired channels from the digitized [input] signal." Ex. 1001 ['275] cl. 1. In contrast, Zhang's system does not select any channels from the digitized input signal; instead, it extracts all channels C_1-C_n, which include ***both*** desired and undesired channels, from the digitized input signal without performing any selection. Only then does Zhang select the desired channels D_1-D_m from this already extracted collection of channels C_1-C_n. *See* Section II.A.

During prosecution, the Examiner highlighted this distinction as material to patentability. Specifically, the applicant listed in an IDS the patent that issued from the same Zhang patent application publication that forms the basis of the

Petition. *See* Section II.B. The Zhang patent listed in the IDS and the Zhang patent application publication that forms the basis of the Petition have substantially identical disclosures. *Compare generally* Ex. 1013 [Zhang] *with* Ex. 2023 [Zhang-Patent]. The Examiner, in his Notice of Allowance, expressly stated that he had considered the references listed in the IDS, and had found them to be missing the "selecting" limitation of the claims. Ex. 2025 [NOA] 6-7. Specifically, the Examiner found that the prior art listed in the IDS, including Zhang, did not select desired channels from the digitized input signal as required by the claims, but instead separated the input signal into all its constituent channels:

> ***The prior art comprising Information Disclosure Statements filed 16 August 2023 and 18 August 2023 was considered by the Examiner in view of the instant application.*** …
>
> ***[T]he prior art made of record*** teach a receiver for a wireless telecommunication system teach all of the adjacent frequency bands in the IF signal passed by a band pass filter in the radio frontend are converted to a digital signal by an ADC and then ***separated into their respective frequency bands by a channelizer*** where the separated frequency bands are processed in the normal manner by subsequent DSP devices, see Claxton et al. US 6,735,421. ***The prior art made of record do not teach selecting, by a digital frontend (DFE) coupled to the ADC, a plurality of desired channels from the digitized signal*** and outputting by the DFE, the selected plurality of desired channels to at least one demodulator as a digital datastream.

Ex. 2025 [NOA] 6-7.[1]

Petitioner does not even attempt to remedy Zhang's deficiencies identified by the Examiner. Instead, it relies on Zhang alone for the disclosure of the very "selecting" limitation that the Examiner found to be missing in Zhang. Pet., 31-33. But because Zhang's architecture is fundamentally different from the claimed invention, Petitioner maps both Zhang channel sets C_1-C_n and D_1-D_m, in the alternative, to the claimed "desired channels." Both alternatives fail.

With respect to channels C_1-C_n, Zhang's express disclosures, as well as its prosecution history, unambiguously confirm that channels C_1-C_n encompass all channels within the "entire signal" band, both desired and undesired, which are indiscriminately demultiplexed from the digitized input signal. Ex. 1013 [Zhang] [0027]. Thus, channels C_1-C_n are neither "desired channels," nor "selected." *See* Section III.A.1. Furthermore, regardless of whether channels C_1-C_n are "desired" or "selected," to the extent Petitioner relies on Zhang's channels C_1-C_n as the claimed "plurality of desired channels," then Petitioner fails to show disclosure or obviousness of limitation 1[f]. That limitation requires "outputting … ***the*** selected plurality of desired channels to at least one demodulator ….," but Zhang does not output channels C_1-C_n to demodulators. *See* Section III.A.2.

[1] All emphases added unless stated otherwise.

With respect to channels D_1-D_m, while they are desired channels, they also fail to disclose the claims for multiple reasons. First, they are not selected "from the digitized signal" as claimed. Specifically, the claims require that the "desired channels" must be selected from the same "digitized signal" that is generated by the analog to digital converter. *See* Section III.B.1. But Zhang channels D_1-D_m are not selected from the "digitized signal" that the Petition points to in Zhang. Instead, they are selected from channels C_1-C_n. Even though both the '275 patent and Zhang may ultimately achieve the same outcome (outputting desired channels), they do so through different methods, and "the very details regarding how" this result is achieved are "at the heart of a process patent." *Amgen, Inc. v. Hoechst Marion Roussel*, 126 F. Supp. 2d 69, 101 (D. Mass. 2001) aff'd in relevant part, 314 F.3d 1313, 1346-1347 (Fed. Cir. 2003). Second, Petitioner has proposed that the plain meaning of "selecting" requires extracting a channel. *See* Section III.B.2. Zhang channels D_1-D_m are not "extracted," but are instead selected from the already extracted channels C_1-C_n. Thus, Zhang channels D_1-D_m are not selected under Petitioner's construction of that term. Indeed, Petitioner's own expert admitted at deposition that Zhang's Selector 240, which selects channels D_1-D_m, does not perform any selection under Petitioner's construction. *See* Section III.B.2. Third, the claims require that the selection of desired channels be performed by a "digital frontend (DFE)," but Petitioner fails to show that Zhang's

Selector 240, which selects channels D_1-D_m, discloses the claimed digital frontend (DFE). *See* Section III.B.3.

For these reasons and more, Petitioner fails to prove that any claim is disclosed and/or obvious under any of its grounds.

II. ZHANG IS THE PRIOR ART CONSIDERED AND REJECTED DURING PROSECUTION BECAUSE IT HAS A FUNDAMENTALLY DIFFERENT ARCHITECTURE FROM THE PATENT.

Zhang is the cornerstone of each of Petitioner's grounds. Pet., 14-15. However, Zhang was considered and rejected during prosecution of the '275 patent because it has a fundamentally different architecture that fails to disclose or render obvious the claims. *See* Section II.B, *infra*. Though both Zhang and the '275 patent involve a digitized input signal, and, ultimately, output desired channels, the method by which they achieve this result is critically different. Specifically, the '275 patent selects desired channels from the digitized input signal. In contrast, Zhang performs no selection from the digitized input signal. Instead, it blindly and indiscriminately extracts ***all*** channels, ***both*** desired ***and*** undesired, from the digitized input signal without performing any selection, and only later selects the desired channels from the already extracted channels. *See* Section II.A, *infra*. For similar reasons, the Examiner during prosecution, after considering Zhang and other references, found that they do not disclose the "selecting" limitation because

the input signal in those references is merely separated into its constituent channels by a demultiplexer. Ex. 2025 [NOA] 6-7; Section II.B, *infra*.

A. Unlike The ’275 Patent, Zhang Extracts All Channels, Both Desired And Undesired, From The Digitized Input Signal Without Any Selection.

As explained in this section, Zhang has a fundamentally different architecture from the ’275 patent. While the ’275 patent selects desired channels from the digitized input signal, Zhang indiscriminately extracts all channels from the digitized input signal without any selection.

As Dr. Russ explains, the ’275 patent outputs desired channels by selecting desired channels from the digitized input RF signal:

> The Figure 2 embodiment of the ’275 patent, annotated below, is illustrative. There, the analog input RF signal (yellow) is first digitized in the analog to digital converters (yellow). Ex. 1001 [’275] 5:53-56. Then, a bank of N mixers (blue) selects N desired channels, without selecting any undesired channels, from the digitized input signal. *Id*., 5:56-61, 6:1-11. Specifically, each of the N mixer paths is responsible for extracting a desired channel from the digitized input signal. The selected desired channels are then output to demodulators (green). *Id*., 7:16-20.

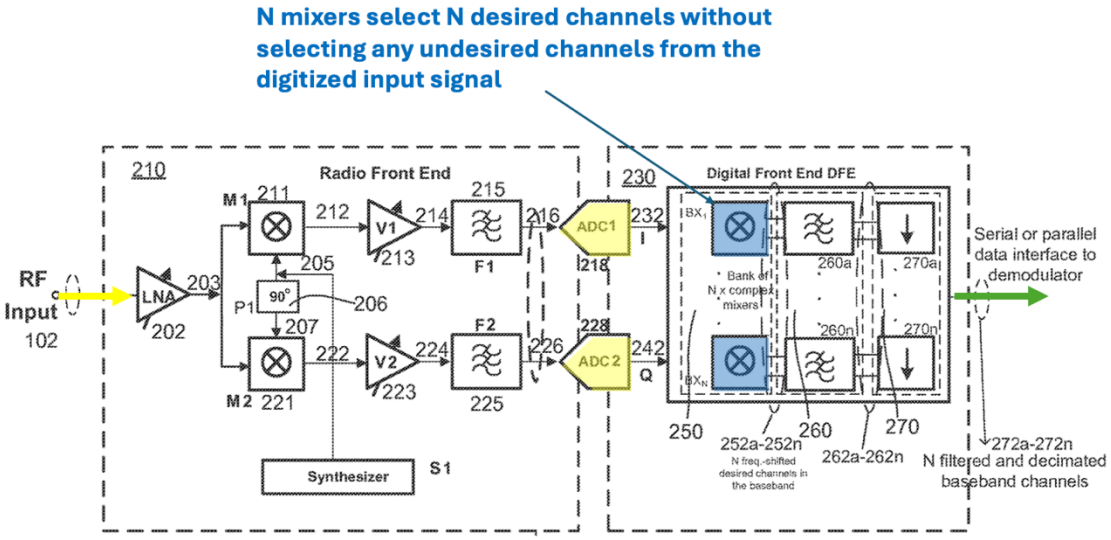

'275 Pat. Fig. 2 (modified and annotated)

Ex. 2013 [Russ-Decl.] ¶ 35.

In contrast, Zhang never performs this step. It does not select desired channels, or any channels, from the digitized input signal. Per Dr. Russ:

> In Zhang, creating an output of desired channels is achieved through a different method, which I explain in the context of Zhang's Figures 2 and 3, annotated below. Similar to the '275 patent, Zhang digitizes an input signal (yellow), consisting of "n" desired and undesired channels, in the analog to digital converter 220 (yellow). Ex. 1013 [Zhang] [0027] ("In this specific embodiment, ADC 220 is a high-speed ADC so that an entire signal band with n channels can be converted"). Note that the letter "n" in Zhang denotes the total number of channels in the "entire signal band," both desired and desired, whereas the letter "N" in the '275 patent denotes the number of desired channels.
>
> Unlike the '275 patent, however, Zhang's method then blindly extracts from the digitized input signal ***all*** channels C_1-C_n, ***both*** desired ***and***

undesired, in the Digital Channel DeMux 230 (red) without making any selection. *Id.*, [0028] ("A digital channel demultiplexer 230 then demultiplexes the multi-channel digital RF signal into separate digital RF channels C_1 to C_n."). The exemplary architecture of Zhang's Digital Channel DeMux 230 is shown in Zhang's Figure 3, which I have included in the annotation below. Note that even though Zhang's Digital Channel DeMux 230 uses complex mixers similar to the '275 patent to extract channels, it extracts all channels, both desired and undesired, rather than selecting the desired ones, unlike the '275 patent.

Once all channels C_1-C_n, both desired and undesired, are extracted from the digitized input signal, the channels C_1-C_n are sent as the input to the digital selector 240 (blue). *Id.*, [0028]. Using the channels C_1-C_n as the input, the digital channel selector 240 (blue) then selects the desired channels and outputs them to demodulators (green). *Id.*, [0028] ("an n×m digital selector 240 receives the demultiplexed digital RF channels C_1 to C_n and then selects one or more of the RF channels D_1 to D_m from one or more of the digital RF channels C_1 to C_n."); [0039] ("In operation, digital selector 500 digitally selects one or more RF channels D_1 to D_m from the digital RF channels C_1 to C_n and then sends them to appropriate demodulators …."). Note that if the "n" channels extracted by the Digital Channel Demux of Zhang were all "desired" channels, there would be no need for a separate n×m digital selector. In other words, the arrangement of the pieces of Zhang's Fig. 2 makes clear that all channels, not just the ones that are desired, are being processed.

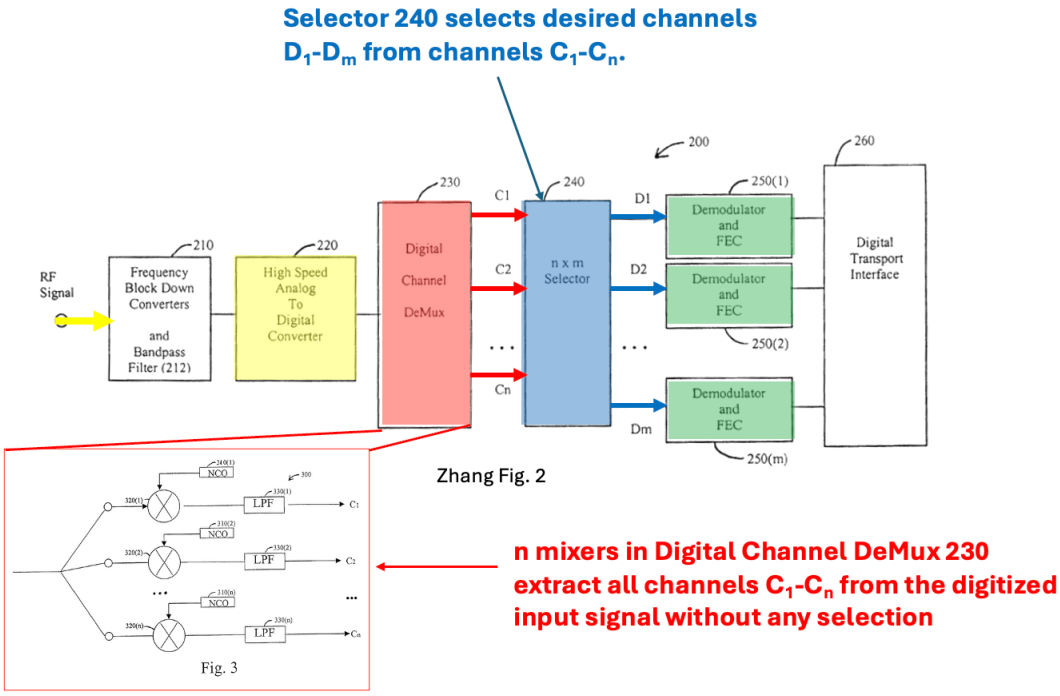

Ex. 2013 [Russ-Decl.] ¶¶ 36-38.

As Petitioner's expert, Mr. Lett, testified, Zhang's use of a different method from the '275 patent is not coincidental. Rather, Zhang's method by design allows the user to select a different channel as the desired channel D_1-D_m from the already extracted channels C_1-C_n, instead of having to select and extract new desired channels from the digitized input signal:

> Q. So did I understand correctly that Zhang demultiplexes more channels that at one time may be sent to the demodulator so that the user can switch between the desired channels at a faster speed?

> A. Yeah. So Zhang discloses the digital selector provides the subscriber with fast channel search capabilities. That's in paragraph in 28 cited in Zhang.

Ex. 2020 [Lett-Depo.] 8:14-22; *see also id*., 8:4-8 (Petitioner's expert opining that "I don't think it's wasted. It's really—it's there for a quick channel change to the new—to the new desired channel that may be going from an undesired to a desired channel."); Ex. 1013 [Zhang] [0028] ("Channel-search capabilities of the digital selector 240 renders it much faster than traditional analog channel switching through RF tuners.").

As explained below, the difference in the methodologies utilized by Zhang and the '275 patent was recognized by the Examiner after considering Zhang.

B. Zhang Was Considered And Rejected During Prosecution Because It Does Not "Select[] Desired Channels From The Digitized [Input] Signal."

The fundamental distinction between Zhang and the '275 patent, and Zhang's failure to disclose the "selecting" step, was also recognized by the Examiner during prosecution of the '275 patent.

The applicant during prosecution listed U.S. Pat. 6,704,372 [Zhang-Patent] in an IDS:

U.S.PATENTS						Remove
Examiner Initial*	Cite No	Patent Number	Kind Code[1]	Issue Date	Name of Patentee or Applicant of cited Document	Pages,Columns,Lines where Relevant Passages or Relevant Figures Appear
	1	6704372		2004-03-09	Zhang et al.	

Ex. 2024 [IDS] 1.

The Zhang patent submitted by the applicant in the IDS is the patent that issued from the same application that published as the Zhang reference relied upon by the Petition. Ex. 1013 [Zhang] 1 (Appl. No.: 09/956,479); Ex. 2023 [Zhang-Patent] 1 (Appl. No.: 09/956,479). Both the Zhang patent submitted by the applicant in the IDS and the Petition's Zhang reference have substantially identical disclosures. *Compare generally* Ex. 1013 [Zhang] *with* Ex. 2023 [Zhang-Patent].

The Examiner stamped the IDS, confirming consideration of the Zhang patent:

ALL REFERENCES CONSIDERED EXCEPT WHERE LINED THROUGH. /B.J.J/

Ex. 2024 [IDS] 1-2.

The Examiner subsequently issued a notice of allowance, confirming that he had considered the references identified in the IDS, including Zhang:

> Claims 19-38 are allowed. ***The prior art comprising Information Disclosure Statements filed 16 August 2023 and 18 August 2023 was considered by the Examiner in view of the instant application.*** Although the prior art is from the applicant's other patents, i.e. US

> 8223,775, as part of Entropic Communications, LLC, the applicant, v. Charter communications, Inc. Civil Action and Entropic Communications, LLC v. DirectTV, LLC and Dish Network Corp., Civil Action, the prior art was related to a cable modem system and architecture but not as claimed in the instant application.

Ex. 2025 [NOA] 6.

The Examiner then confirmed that the considered prior art, including Zhang, did not disclose the claimed step of selecting desired channels from the digitized input signal, because the prior art instead used a demultiplexer to separate an input signal into all its constituent channels:

> The following is a statement of reasons for the indication of allowable subject matter: ***the prior art made of record*** teach a receiver for a wireless telecommunication system teach all of the adjacent frequency bands in the IF signal passed by a band pass filter in the radio frontend are converted to a digital signal by an ADC and then ***separated into their respective frequency bands by a channelizer*** where the separated frequency bands are processed in the normal manner by subsequent DSP devices, see Claxton et al. US 6,735,421. ***The prior art made of record do not teach selecting, by a digital frontend (DFE) coupled to the ADC, a plurality of desired channels from the digitized signal*** and outputting by the DFE, the selected plurality of desired channels to at least one demodulator as a digital datastream.

Ex. 2025 [NOA] 7.

A POSITA reviewing the ’275 patent’s prosecution history would understand that a reference similar to Zhang, which demultiplexes the digitized input signal into all its constituent channels does not perform the “selecting” step of the claims. *See* Ex. 2013 [Russ-Decl.] ¶¶ 40-46.

As explained in the following section, Petitioner relies on Zhang alone for the disclosure or obviousness of the same “selecting” step that the Examiner found was missing in Zhang. The Petition fails to show disclosure or obviousness of that step.

III. PETITIONER FAILS TO SHOW “SELECTING, BY A DIGITAL FRONTEND (DFE) … THE PLURALITY OF DESIRED CHANNELS FROM THE DIGITIZED SIGNAL” (ALL CLAIMS, ALL GROUNDS).

Limitation 1[e] recites “selecting, by a digitized frontend (DFE) coupled to the ADC, the plurality of desired channels from the digitized signal.” Ex. 1001 [’275] cl. 1. Independent claim 11 recites a corresponding limitation. *Id.*, cl. 11 (limitation 11[e]).[2] Petitioner contends that Zhang alone discloses this limitation.

[2] This POR follows the Petition’s claim-limitation conventions.

Pet., 31-34 (contending Zhang alone discloses limitation 1[e]); 45-46 (relying on arguments for claim 1 for the alleged disclosure of claim 11).[3]

Petitioner relies on two alternative theories. It first argues that Zhang's channels C_1-C_n constitute the claimed "plurality of desired channels." Pet., 31. In the alternative, Petitioner relies on Zhang's channels D_1-D_m as the claimed "plurality of desired channels." Pet., 33. Both of Petitioner's alternatives fail for multiple reasons. Sections III.A-B, *infra*.

A. Petitioner's Reliance On Channels C_1-C_n As The Claimed "Plurality Of Desired Channels" Fails.

Petitioner's reliance on Zhang's channels C_1-C_n fails for two independently sufficient reasons. First, both Zhang and its prosecution history make clear that channels C_1-C_n encompass all channels within the "entire signal band," both desired and undesired, that are indiscriminately demultiplexed from the input signal. Thus, they are neither "desired channels," nor "selected." Section III.A.1, *infra*. Second, regardless of whether channels C_1-C_n are "desired" or "selected," to

[3] The Petition also presents alternate grounds "if" the claimed digital front end is construed as a means-plus-function limitation. Pet., 68. As Patent Owner does not advocate for such a construction, the Petition's alternate grounds are inapplicable on their own term.

the extent Petitioner relies on Zhang's channels C_1-C_n as the claimed "plurality of desired channels," then Petitioner fails to show disclosure or obviousness of limitation 1[f]. That limitation requires "outputting … ***the*** selected plurality of desired channels to at least one demodulator ….," but Zhang does not output channels C_1-C_n to demodulators. Section III.A.2, *infra*.

1. Zhang's Channels C_1-C_n Are All Channels In The Entire Signal Band That Are Indiscriminately Demultiplexed Without Any Selection.

Petitioner first argues that Zhang's channels C_1-C_n disclose the claimed "plurality of desired channels" that are selected from the digitized input signal. Pet., 31 ("selecting the target RF channels C_1-C_n (claimed 'desired channels')"). As discussed below, however, both Zhang and its prosecution history confirm that channels C_1-C_n are all channels in the entire signal band, both desired and undesired. Section III.A.1.a, *infra*. Petitioner's arguments that Zhang discloses or renders obvious the claims contradict both Zhang's express teachings, and Petitioner's own expert's understanding of "desired channels." Sections III.A.1.b-c, *infra*.

a. Zhang And Its Prosecution History Expressly Teach That Channels C_1-C_n Are All Channels In The Entire Signal Band, Both Desired And Undesired.

As explained in this section, the express teachings in Zhang and its prosecution history make clear that channels C_1-C_n are all the channels in the entire

signal band, both desired and undesired, which are indiscriminately demultiplexed without any selection.

The letter "n" in Zhang denotes the number of channels, both desired and undesired, in the "entire signal band." For example, Zhang explains:

> An ADC 220 then converts the down-converted multi-channel analog RF signal to a multi-channel digital RF signal. In this specific embodiment, ADC 220 is a high-speed ADC so that ***an entire signal band with n channels*** can be converted.

Ex. 1013 [Zhang] [0027]; Ex. 2013 [Russ-Decl.] ¶ 51.

This is undisputed. Under cross-examination on this point, Petitioner's expert conceded that the number of channels "n" includes both desired and undesired channels:

> Q. So you agree that in paragraph 27 of Zhang, in the sentence that says, "In this specific embodiments" – "embodiment, ADC 220 is a high-speed ADC so an entire signal band with n channels can be converted," end quote. So you agree in this sentence, ***lower case letter n refers to both desired and undesired channels within the entire band***; correct?
>
> A. It seems to, ***yes***.

Ex. 2019 [Lett-Depo.] 78:14-22.

Zhang then explains that its digital channel demultiplexer 230 demultiplexes the input RF signal into "separate" channels C_1-C_n:

> A digital channel demultiplexer 230 then demultiplexes the multi-channel digital RF signal into separate digital RF channels C_1 to C_n.

Ex. 1013 [Zhang] [0027]; *see also id*. Abstract ("A digital channel demultiplexer receives the multi-channel digital RF signal from the ADC and demultiplexes the multi-channel digital RF signal into separate digital RF channels"). Consequently, because "n" in Zhang denotes the total number of channels, both desired and undesired, the demultiplexed channels C_1 to C_n also include both desired and undesired channels. Ex. 2013 [Russ-Decl.] ¶¶ 52-53.

The remainder of Zhang only further confirms that channels C_1 to C_n include both desired and undesired channels. Specifically, Zhang explains that, after channels C_1-C_n are extracted from the input RF signal, an n×m selector 240 selects the desired channels D_1-D_m from the total channels C_1-C_n:

> Still referring to FIG. 2, an n×m digital selector 240 receives the demultiplexed digital RF channels C_1 to C_n ***and then selects one or more of the RF channels D_1 to D_m from one or more of the digital RF channels C_1 to C_n***. … [O]nly the selected channels are later demodulated unlike the systems using RF tuners which demodulate all of the RF channels.

Ex. 1013 [Zhang] [0028]; *see also id*., [0039] ("In operation, digital ***selector 500 digitally selects one or more RF channels D_1 to D_m from the digital RF channels C_1 to C_n and then sends them to appropriate demodulators*** or output ports (not

shown) through different data buses (not shown)."); [0042] ("For example, in FIG. 6, there are 35 separate RF channels C_1 to C_{35}. Of those RF channels, 20 RF channels D_1 to D_{20} are selected. Those 20 selected RF channels are sent to a set of demodulators 650(1 … 20) for demodulation."). Ex. 2013 [Russ-Decl.] ¶ 54.

This aspect of Zhang's operation is shown in its Figure 2, annotated below, confirming that the digital channel demultiplexer 230 demultiplexes channels C_1-C_n containing both desired and undesired channels, and n×m selector 240 selecting desired channels D_1-D_m for transmission to demodulators 250 (green):

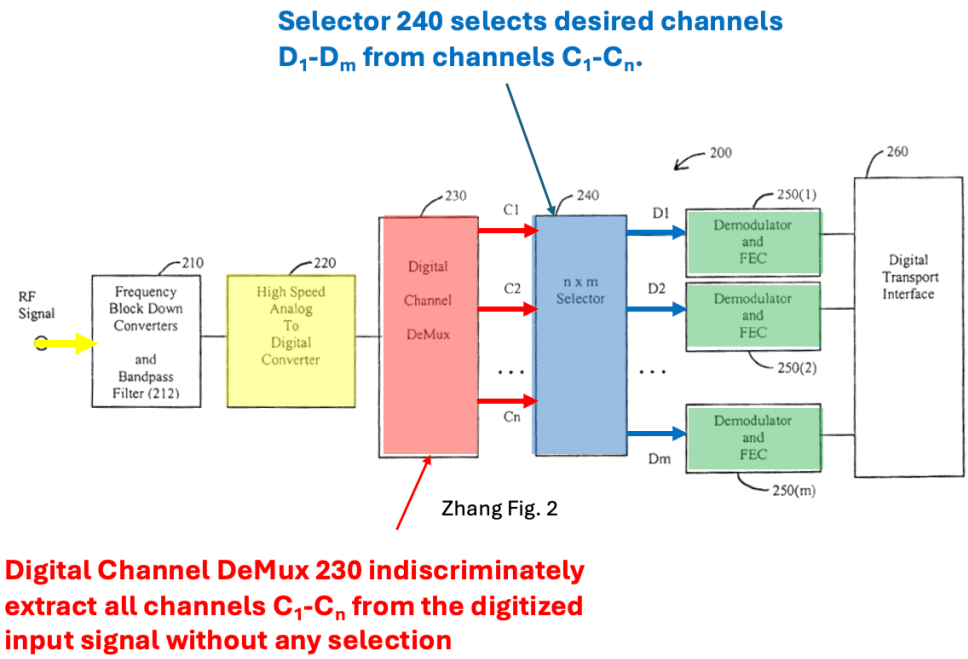

Ex. 2013 [Russ-Decl.] ¶ 55.

The only numerical example disclosed in Zhang's specification also confirms that channels C_1-C_n are all the channels in the entire signal band. Per Dr. Russ:

> Zhang's specification generally uses variables such as n and m, but it does provide one numerical example, which confirms that channels C_1-C_n are all the channels in the entire signal band. Zhang explains that in its Figure 6 embodiment, the frequency band of the input signal is 540-750 MHz. Ex. 1013 [Zhang] [0041]; Fig. 6. This means that the frequency band of the input signal is 750 – 540 = 210 MHz.
>
> Zhang further discloses that in its Figure 6 embodiment, there are 35 channels C_1-C_{35} in the input signal. Ex. 1013 [Zhang] [0042]; Fig. 6. In other words, in Zhang's Figure 6 embodiment, n = 35. Zhang uses exemplary channel width of 6 MHz, which was typical at the time of Zhang (and, indeed, in North America is typical now). Ex. 1013 [Zhang] [0006]. The frequency bandwidth for 35 channels (C_1-C_{35}), at 6 MHz each, equals 210 MHz, obtained by multiplying 35 and 6. That is exactly the frequency bandwidth of the entire input signal, 540-750 MHz. Therefore, Zhang's only numerical example confirms that channels C_1-C_n are all the channels in the entire signal band.

Ex. 2013 [Russ-Decl.] ¶¶ 56-57. Again, Petitioner's expert also agreed at deposition:

> Q. So in Zhang Figure 6, demultiplexer that demultiplexes Channels C_1 through C_{35} has ***demultiplexed all the channels—all the RF channels in the input signal; correct?***

A. In this specific example, ***yes***.

Ex. 2022 [Lett-Depo.] 44:13-17.

Zhang's prosecution history also confirms that channels C_1-C_n are all the channels in the entire signal band. It specifically discusses and further confirms that Zhang's digital channel demultiplexer 230 outputs all channels (not just desired channels) from the input signal without performing any selection, and that it is Zhang's Selector 240 that takes the extracted channels C_1-C_n as the input, and selects the desired channels D_1-D_m from the extracted channels. As Dr. Russ explains:

> Zhang's European Patent Application claims recited "a digital channel demultiplexer … to demultiplex the digital RF signal into separate digital RF channels (C_1 … C_n)," and "a selector … configured to receive the separate digital RF channels and to select one or more separate digital RF channels (D_1... D_m)." Ex. 2016 [Zhang-EPO-Reply] 4.
>
> The European Patent Office (EPO) noted that the independent claims "appear to be not new." Exhibit 2015 [EPO-Communication-Annex] 2-3. In response, the applicant explained that it is the selector that distinguished Zhang from its prior art, where all of the channels were demodulated:
>
>> ***The provision of a selector allows the selection of specific RF channels for demodulation dependent on the specific application*** in which the apparatus is implemented (paragraph

> 37 of the application) this allows for power consumption to be optimized because only the selected channels are later demodulated ***unlike systems which demodulate all of the RF channels*** (e.g. [Reference] D1 and [Reference] D2). Thus, the invention provides apparatus which is not only faster, but also dissipates less heat, than systems such as those in D1 and D2, because fewer resources are required when demodulating only the selected RF channels (paragraph 25).

Ex. 2016 [Zhang-EPO-Reply] 2-3. Subsequently, the EPO accepted the Zhang applicant's argument and allowed the claims without any further rejection. Ex. 2017 [EPO-Grant-Intent] 1.

A POSITA reviewing the above would recognize that from Zhang's applicant's own perspective, the digital channel demultiplexer 230, like Zhang's prior art, demultiplexed all channels (both desired and undesired) without performing any selection, and it was Zhang's selector that, unlike Zhang's prior art, only transmitted desired channels to demodulators.

Ex. 2013 [Russ-Decl.] ¶¶ 58-60. Thus, Zhang's prosecution history confirms its express disclosures in its specification that channels C_1-C_n encompass all channels in the entire signal band, both desired and undesired.

b. <u>Petitioner's Arguments Are Inconsistent With Zhang.</u>

Petitioner's arguments for why Zhang's channels C_1-C_n supposedly contain only desired channels are contrary to Zhang's express disclosures discussed above.

Petitioner first relies on the fact that Zhang's Channel Demultiplexer 230 in an embodiment is implemented through complex mixers and argues that because the '275 patent also relies on complex mixers to extract channels, it supposedly follows that channels C_1-C_n are the claimed "desired channels." Pet., 33. But, as explained above, even though Zhang and the '275 patent both use complex mixers to extract channels from the digitized input signal, Zhang's mixers, unlike the '275 patent's mixers, extract ***all*** channels, ***both*** desired ***and*** undesired, from the digitized input signal. This is shown below by adding additional annotations (red) to Petitioner's annotation comparing Zhang Figure 3 with the '275 patent Figure 2 (at Pet., 33). As can be seen in the figures and explained in more detail below, in Zhang, the number of complex multipliers 320 (1…n) is the same number "n" as the number of all channels, both desired and undesired, in the entire signal band. In contrast, the number of mixers N in the '275 patent is the number of desired channels.

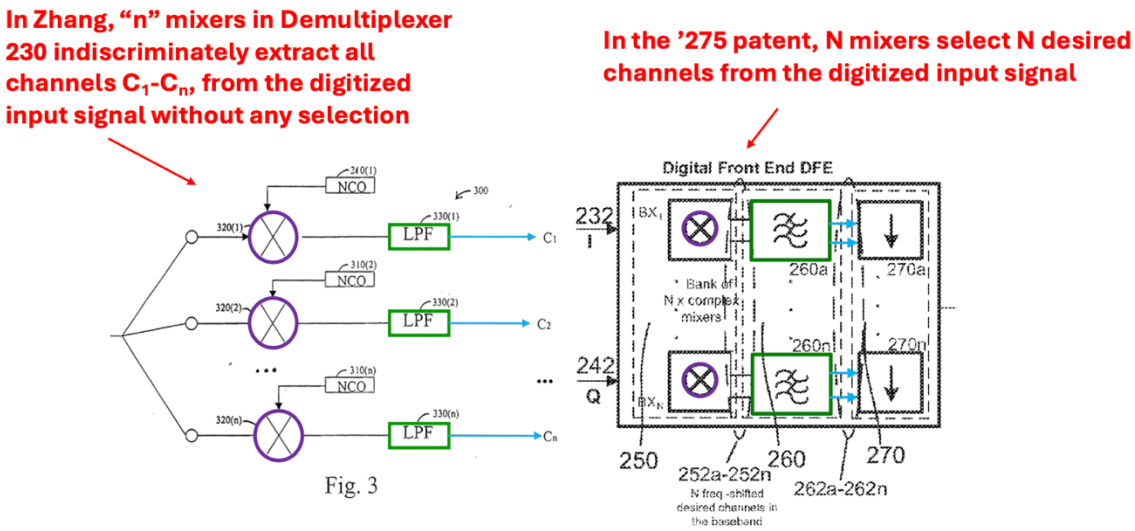

Ex. 1013, Fig. 3 (annotated) **Ex. 1001, Fig. 2 (excerpted/annotated)**

Ex. 2013 [Russ-Decl.] ¶ 63. As Dr. Russ further explains, Zhang's own description of its Figure 3 confirms that its complex mixers down convert both desired and undesired channels C_1-C_n:

> At a high level, if Zhang's Figure 3 down converted and output only desired channels, there would have been no need for the subsequent channel selector 240 to select desired channels D_1-D_m from channels C_1-C_n. This is in contrast to the '275 patent's Figure 2, where the output of the Digital Front End is sent to demodulators because the down conversion and selection in the Digital Front End is only for the desired channels. Details of Zhang's Figure 3 confirm this distinction.
>
> Zhang explains that its Figure 3 "can be used to implement digital channel demultiplexer 230 of Fig. 2." Ex. 1013 [Zhang] [0030] (cited by Pet., 25). Zhang further explains that its Figure 3 contains "complex multipliers 320 (1 …n)." Ex. 1013 [Zhang] [0030]. These "complex multipliers 320 (1 …n)" are the complex mixers relied upon by

> Petitioner. Pet., 25. It can be readily shown, however, that Zhang's complex mixers 320 (1….n) extract both desired and undesired channels from the digitized input RF signal. First, Zhang confirms that the output of its Figure 3 circuitry is channels C_1 to C_n. Ex. 1013 [Zhang] [0032] ("Digital tuner circuit 300 then outputs the separated RF channels C_1 to C_n, each RF channel being centered at the baseband."). As I explained above, Zhang is clear that channels C_1-C_n include both desired and undesired channels.
>
> Second, there are "n" complex multipliers 320 (1…n), each used for extracting a single channel. Ex. 1013 [Zhang] [0030] ("One chain of each of these elements is used for each RF channel."). As I also explained above, Zhang is clear that the number "n" in its disclosure denotes both desired and undesired in "entire signal band." Ex. 1013 [Zhang] [0027]. Thus, the number of complex multipliers 320 (1…n) further confirms that Zhang's Figure 3 output both desired and undesired channels.

Ex. 2013 [Russ-Decl.] ¶¶ 64-66.

Petitioner next relies on multiple out-of-context statements from Zhang to imply that channels C_1-C_n include only desired channels. Specifically, Petitioner relies on Zhang's use of the phrase "target channel" in its discussion of its Figure 3. Pet., 31-32. But Petitioner misapprehends Zhang. Zhang's reference to a channel as a "target channel" has nothing to do with whether it is a desired channel. In Zhang, the "target channel" is simply the specific one of the n

channels (consisting of ***both*** desired ***and*** undesired channels) that a particular mixer path is responsible for extracting.

As Dr. Russ explains:

> Petitioner attempts to capitalize on Zhang's use of the phrase "target channel" in its discussion of Figure 3 to argue that Figure 3 only outputs desired channels. Pet., 32 (citing Ex. 1013 [Zhang] [0032]). Petitioner is incorrect. Zhang, again, makes clear that its Figure 3 outputs both desired and undesired channels, and Petitioner's interpretation of Zhang's use of the phrase "target channel" is simply incorrect.
>
> Specifically, in Zhang, as I explain further below with reference to its annotated Figure 3, the digitized input RF signal is sent in parallel to multiple data paths, each of which is responsible for extracting one of the channels C_1-C_n from the digitized input signal. It is in this context that Zhang states that each data path is responsible for extracting its "target channel," which only means the specific one of channels C_1-C_n that the data path is responsible for. "Target channel," thus, does not refer to a "desired" channel but, rather, a particular channel for a particular data path, which may ultimately be desired or undesired. For example, the target channel for the fourth chain is C_4.

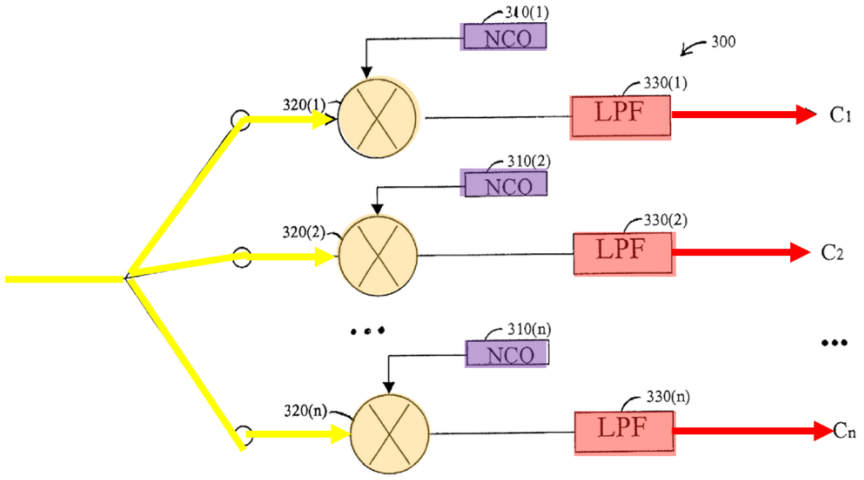

Fig. 3

> Further, if Zhang's digital channel demultiplexer 230 (as implemented in its Figure 3) demultiplexed only desired channels, that would negate the function of the digital channel selector 240 that follows the digital channel demultiplexer 230. Again, the digital channel selector 240 takes the output of the digital channel demultiplexer 230 (channels C_1-C_n) as input, and selects and outputs desired channels D_1-D_m.

Ex. 2013 [Russ-Decl.] ¶¶ 67-69.

Zhang's detailed explanation of how its Figure 3 operates readily confirms Petitioner's misinterpretation of Zhang's "target channel." As Dr. Russ further explains:

> In Zhang's Figure 3 (above), the digitized input RF signal (yellow) is transmitted in parallel through multiple data paths, each of which is responsible for extracting one of channels C_1-C_n. Ex. 1013 [Zhang] [0030]-[0031]. In each data path, the way a channel is extracted is that a numerical local oscillator NLO 310 (purple) provides the frequency

> for the one of channels C_1-C_n for which that specific data path is responsible. *Id*., [0032]. A multiplier 320 (orange) multiplies the digitized input RF signal with the provided frequency to bring the channel to baseband. *Id*. Then a corresponding low pass filter LPF 330 (red) filters out all channels other than the one of C_1-C_n for that data path. *Id*. In this context, Zhang states that the complex mixer 320 (orange) is provided with the "characteristic frequency of a desired RF channel," which means the frequency of the one of channels C_1-C_n for which this specific data path is responsible. Similarly, Zhang states that the LPF (red) only permits the "target RF channel" to pass, which, again, means the specific one of channels C_1-C_n for which this specific data path is responsible. *Id*. Nothing in Zhang's discussion of its Figure 3 changes its consistent disclosure that channels C_1-C_n contain both desired and undesired channels.

Ex. 2013 [Russ-Decl.] ¶ 70.

This localized usage has no bearing on whether C_1–C_n, as a set constitute the claimed "desired channels." Petitioner makes no attempt to show or analyze why a target frequency of one circuit element within the overall circuit is the claimed "desired channel" beyond relying on the coincidental use of similar phrasing. In fact, its expert's deposition testimony entirely refutes Petitioner's reliance on channels C_1-C_n as the claimed "desired channels." *See* Section III.A.1.c, *infra*. Further still, Petitioner maps the claimed "digital front end" that selects the desired channels to the entirety of Zhang's Demultiplexer 230, not to one chain that

outputs only one of channels C. Pet., 32 ("Zhang's digital channel demultiplexer 230 is the digital frontend …"). Zhang's Demultiplexer 230 as a whole outputs all of channels C_1–C_n, not a subset or only "desired channels." *Id*. Ex. 1013 [Zhang] [0027]. As such, the element that Petitioner relies upon for the disclosure of "digital front end" does not select and output any specific channels—it simply outputs all channels. The fact that one circuit element within that larger structure coincidentally refers to the specific signal it is tasked with processing as "target" or "desired" does not change the fact that Demultiplexer 230 as a whole outputs all channels. Taken to its logical conclusion, Petitioner's argument removes all meaning from "desired channels" because all circuit elements always have a "target" or "desired" signal that they process. Ex. 2013 [Russ-Decl.] ¶ 71.

Petitioner also relies on Zhang's claims to argue that channels C_1-C_n contain only desired channels. Pet., 32. As a threshold matter, this is not a claim construction exercise focused on identifying the broadest reading of Zhang's claims. Rather, the question is what Zhang—including its claims, read in context—teaches a person of ordinary skill in the art. In any event, as Dr. Russ explains, Zhang's claims closely follow Zhang's Figure 3 embodiment discussed above, and Petitioner misapprehends their disclosure—which, of course, cannot claim a system that is entirely different from Zhang's specification:

For example, Zhang's claims 34, 36, and 37 depend from independent claim 28. Claim 28 claims the function of Zhang's digital channel demultiplexer in Zhang's Figure 3, which extracts both desired and undesired channels from the input signal, and recites "[a] method for demultiplexing a digital multi-channel RF signal into a plurality of separate content channels." As detailed below, claims 34, 36, and 37 recite various details of Zhang's digital channel demultiplexer 230 from Zhang's Figure 3, including functions of the mixers, local oscillators and low pass filters. As noted above, however, Zhang's discussion of its Figure 3 is the ***only*** disclosure in Zhang of "target channels" and "target frequencies," and Zhang's use of these phrases does not mean selecting only desired channels as the '275 patent does. Rather, it only refers, in context, to the specific one of channels C_1-C_n (consisting of both desired and undesired channels) for which the specific data path is responsible for extracting.

Zhang Claims	Zhang Fig. 3 (Annotated)
34. The method of claim 28 wherein the demultiplexing further comprises: **providing a plurality of select frequencies**, each select frequency being associated with a corresponding and separate RF channel; and **multiplying the at least one multi-channel RF signal** with each of the select frequencies to obtain separate RF channels. 36. The method of claim 34 further comprising **shifting the target RF channel to a baseband**. 37. The method of claim 34 further comprising **filtering undesired RF channels and passing only the target RF channel.** 38. The method of claim 37 wherein the filtering is achieved with a **low-pass filter (LPF)** 39. The method of claim 38 wherein the **LPF is a fine impulse response (FIR) filter.** 40. The method of claim 39 wherein the **FIR filter is a high-speed filter.** 41. The method of claim 34 wherein the select frequences are generated by **numeric control oscillators**.	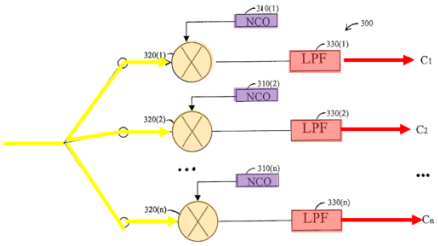 Fig. 3

> Thus, as is clear from the above, similar to Zhang's Figure 3, "target RF channel" in Zhang's claims refers to the one of the channels C_1-C_n for which this path is responsible, and "undesired RF channels" refers to the remaining ones of channel C_1 to C_n other than the one for which this path is responsible. To repeat the earlier example, it means that the fourth chain outputs C_4 and no other channels. But again, all chains that together form the demultiplexer 230 collectively output all channels C_1-C_n.

Ex. 2013 [Russ-Decl.] ¶¶ 73-74.

Next, Petitioner relies on Zhang's statement that "RF channels C_1 to C_n contain channels that are selected or used by a subscriber." Pet., 32 (quoting Exhibit 1013 [Zhang] [0028]). But this portion of Zhang does not state that channels C_1 to C_n contain "only" desired channels, as the claims require. Instead, in context (reproduced below in full), this statement in Zhang simply means that the "channels that are selected or used by a subscriber" are the desired channels D_1-D_m selected by Selector 240, and are contained within the broader set of "RF channels C_1 to C_n" from which they are selected:

> A digital channel ***demultiplexer 230*** then demultiplexes the multi-channel digital RF signal ***into separate digital RF channels C_1-C_n.*** … Still referring to FIG. 2, an n×m digital ***selector 240*** receives the demultiplexed digital RF channels C_1 to C_n and then ***selects one or more of the RF channels D_1 to D_m from one or more of the digital RF channels C_1 to C_n. RF channels C_1 to C_n contain content channels***

> ***that are selected or used by a subscriber.*** Channel-search capabilities of the digital selector 240 renders it much faster than traditional analog channel switching through RF tuners. ***This is because only the selected channels are later demodulated*** unlike the systems using RF tuners which demodulate all of the RF channels.

Ex. 1013 [Zhang] [0028]; *see also id*., [0027] ("an entire signal band with n channels can be converted."); Ex. 2013 [Russ-Decl.] ¶ 75.

For the foregoing reasons, Petitioner fails to show that Zhang channels C_1-C_n are either "desired channels" or "selected." Rather, they are all the channels in the entire signal band, indiscriminately demultiplexed.

c. Zhang Channels C_1-C_n Are Not "Desired Channels" Under Petitioner's Expert's Interpretation Of That Phrase.

The fundamental premise underlying Petitioner's reliance on Zhang channels C_1-C_n is that they are the claimed "desired channels" that are selected "from the digitized signal." Pet., 31 ("selecting the target RF channels C_1-C_n (claimed 'desired channels')), 33 ("Zhang's target RF channels C_1-C_n were mapped to the claimed 'desired channels.'"). As explained in the prior sections, Zhang and its prosecution history are clear that channels C_1-C_n are all channels in the entire signal band irrespective of their desirability. As explained in this section, Zhang's channels C_1-C_n do not disclose the claimed "desired channels" even under Petitioner's expert's own understanding of that term.

Petitioner's expert at deposition agreed that, in the context of the '275 patent, "a channel that is never demodulated would not be considered a desired channel":

> Q. And in order for a subscriber to use a channel, that channel necessarily has to be demodulated; correct?
>
> A. Yeah. I think you would generally demodulate. That's right.
>
> Q. Is it fair to say that in the context of the 275 patent, a channel that is never demodulated would not be considered a desired channel?
>
> A. I think that's the way he uses it. Yes.

Ex. 2022 [Lett-Depo.] 36:18-37:1.

The understanding of Petitioner's expert is supported by the '275 patent's specification. The '275 patent explains that the RF spectrum received at the user end contains not just the desired channels that, for example, a user may wish to watch, but also undesired channels. Ex. 1001 ['275] 2:16-18; Fig. 1. In the '275 patent's prior art systems, the entire frequency spectrum, containing both desired and undesired RF channels, was transmitted to the demodulator. *Id.*, 1:48-51. In such systems, the demodulator would need to identify the desired channels and filter out undesired ones before demodulating desired channels. *Id.* This imposed a substantial hardware burden on the demodulator, "require[ing] a very expensive digital processing circuitry such as very high-speed analog to digital conversion

and high-speed processor in the demodulator." Ex. 1001 ['275] 2:39-42; Ex. 2020 [Lett-Depo.] 28:17-29:2 (confirming same). In part to address this issue, the '275 patent's embodiments implement an architecture that transmit only "desired channels" to the demodulators. *See, e.g.*, Ex. 1001 ['275] 6:8-20. The '275 patent explains that its architecture confers multiple advantages:

> First, it eliminates the need of expensive data conversion, filtering and channel selection on the demodulator side. Second, it removes undesired channels from the signal path at an early stage, thus relieves the large dynamic range requirement in the demodulator.

Ex. 1001 ['275] 7:21-25.

Zhang channels C_1-C_n are not sent to demodulators and, therefore, are never demodulated and do not meet Petitioner's expert's interpretation of "desired channels." Specifically, Zhang is clear that Selector 240 selects channels D_1-D_m from channels C_1-C_n, and it is channels D_1-D_m that are sent to demodulators. Ex. 1013 [Zhang] [0029] ("The m selected RF channels are then fed into respective demodulators 250(1), 250(2), … 250(m)."); [0039] ("In operation, digital selector 500 digitally ***selects one or more RF channels D_1 to D_m*** from the digital RF channels C_1 to C_n and ***then sends them to appropriate demodulators*** …"); *see also* section III.A.2, *infra*. Thus, Zhang channels C_1-C_n are not the claimed "desired channels" even under Petitioner's expert's interpretation of that term.

For all of the foregoing reasons, Petitioner's reliance on Zhang's channels C_1-C_n as the "plurality of desired channels" that are selected is incorrect, and contrary to both Zhang's express disclosures and Petitioner's expert's interpretation of that phrase.

2. Petitioner Fails To Show Other Claim Limitations If It Relies On Zhang Channels C_1-C_n As The Claimed "Desired Channels"

Regardless of whether Zhang channels C_1-C_n are "desired" or "selected," to the extent Petitioner relies on Zhang's channels C_1-C_n as the claimed "desired channels," then it fails to show the subsequent limitation 1[f].

Limitation 1[f] recites "outputting … ***the selected plurality of desired channels*** to at least one demodulator …" "The selected plurality of desired channels" that is provided in limitation 1[f] is the same "plurality of desired channels" that were "select[ed]" in limitation 1[e]. Ex. 1001 ['275] ("selecting, by the digital frontend (DFE) coupled to the ADC, the plurality of desired channels from the digitized signal."). Thus, the claims require that the same "plurality of desired channels" be (1) selected in limitation 1[e] and (2) output to demodulators in limitation 1[f]. But, as explained below, Zhang does not output channels C_1-C_n to demodulators and, to the extent Petitioner relies on channels C_1-C_n for limitation 1[e], it fails to show limitation 1[f].

Zhang explains that it selects channels D_1-D_m from channels C_1-C_n, and it is channels D_1-D_m, not channels C_1-C_n, that are output to demodulators:

> A digital channel demultiplexer 230 then demultiplexes the multi-channel digital RF signal into separate digital RF channels C_1 to C_n. … [A]n n x m digital selector 240 receives the demultiplexed digital RF channels C_1 to C_n and then selects one or more of the RF channels D_1 to D_m from one or more of the digital RF channels C_1 to C_n.
>
> […]
>
> The m selected RF channels are then fed into respective demodulators 250(1), 250(2), … 250(m).

Ex. 1013 [Zhang] [0028]-[0029]. The number m of demodulators 250(1)-250(m) further confirms that it is channels D_1-D_m, not C_1-C_n, that are sent to demodulators. Ex. 2013 [Russ-Decl.] ¶¶ 78-80.

Zhang further confirms that channels D_1-D_m are the channels sent to demodulators in its discussion of its Figure 5, which implements the Selector 240:

> In operation, digital selector 500 digitally ***selects one or more RF channels D_1 to D_m*** from the digital RF channels C_1 to C_n and ***then sends them to appropriate demodulators*** or output ports ….

Ex. 1013 [Zhang] [0039].

That channels D_1-D_m, not C_1-C_n, are sent to demodulators is also readily apparent from Zhang's Figure 2 (annotations added):

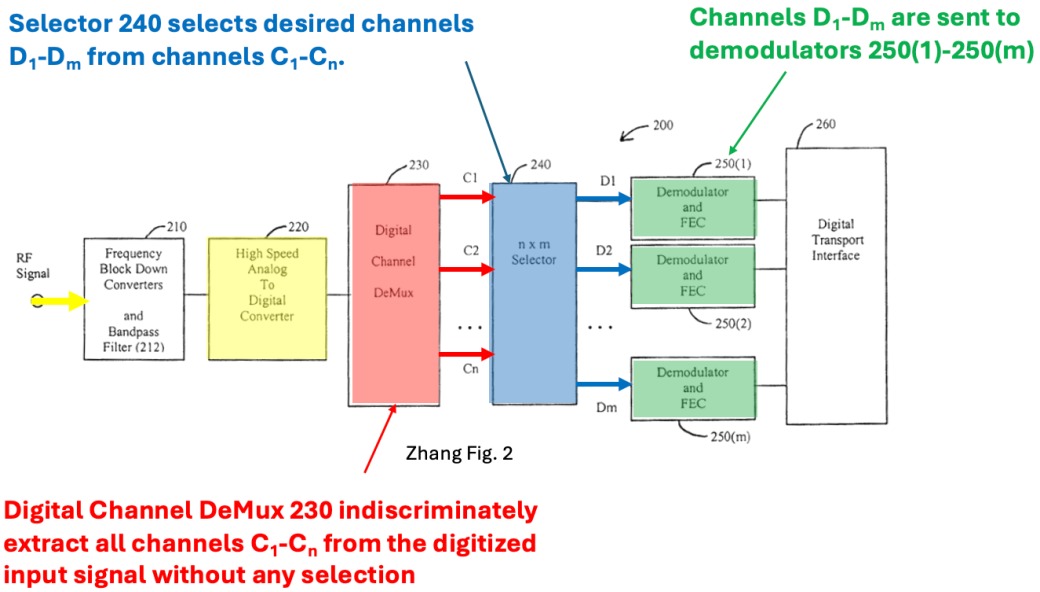

Ex. 2013 [Russ-Decl.] ¶¶ 82.

Petitioner appears to rely on the theoretical happenstance that all channels C_1-C_n may, in retrospect, happen to be subsequently selected by Selector 240 and be sent to demodulators. Pet., 35. This argument fails for multiple reasons.

First, Petitioner does not point to any disclosure in Zhang that teaches or suggests that all extracted channels C_1-C_n could be the desired channels D_1-D_m. As Petitioner's expert explained, Zhang by design extracts more channels from the input signal than are desired (*i.e.*, Zhang extracts all channels) so that new desired channels can be selected without having to extract them from the input signal. Ex. 2020 [Lett-Depo.] 8:408, 8:14-22; *see also* Ex. 1013 [Zhang] [0028].

Second, the theoretical happenstance that all extracted channels C_1-C_n could subsequently be selected as the desired channels D_1-D_m cannot disclose the

claimed method. *In re Facebook, Inc*., 743 Fed Appx. 998, 1001-1002 (Fed Cir. 2018) (reversing the Board's anticipation and obviousness determination because even if the examples in the prior art "happened to result in" the claimed limitation, "[n]othing about [the prior art's] algorithm required" that outcome); *In re Felton*, 484 F.2d 495, 500 (CCPA 1973) (reversing anticipation and obviousness determinations where "it would be mere happenstance if any structure made according to [the prior art] met the limitations of the claims."). Ex. 2013 [Russ-Decl.] ¶¶ 84-85.

For the foregoing reasons, to the extent Petitioner relies on Zhang's channels C_1-C_n as the claimed "desired channels," then it fails to show the subsequent limitation 1[f].

B. Petitioner's Reliance On Channels D_1-D_n As The Claimed "Desired Channels" Fails.

As explained in Section III.A, *supra*, Petitioner's reliance on channels C_1-C_n as the claimed "desired channels" fails for several independently sufficient reasons. As will be explained in this section, Petitioner's alternative theory of mapping the claimed "desired channels" to Zhang channels D_1-D_m also fails for several independently sufficient reasons. First, the claims require that the plurality of desired channels in limitation 1[e] be selected "from the digitized signal" that was generated by the analog-to-digital converter in limitation 1[d]. Section III.B.1,

infra. Zhang channels D_1-D_m are not selected "from the digitized signal" as claimed, but are instead selected from the already separated channels C_1-C_n. *Id*. Second, in the co-pending IPR2024-00432, involving Patent No. 9,210,362 which shares the same specification as the '275 patent at issue here, Petitioner argued that the plain meaning of selecting "is simply extracting a channel from the plurality of frequencies in the digitized RF signal." Ex. 2026 [Comcast-Reply] 24. As channels D_1-D_m are selected from the already extracted channels C_1-C_n, they fail to meet Petitioner's construction of "selecting." Section III.B.2, *infra*. Third, the claims require that selecting of the desired channels be performed "by a digital frontend (DFE). Ex. 1001 ['275] cl. 1. In Zhang, channels D_1-D_m are selected by Selector 240, but Petitioner fails to show that Zhang Selector 240 is a part of the claimed digital frontend. Section III.B.3, *infra*.

1. <u>Zhang's Channels D_1-D_m Are Not Selected "From The Digitized Signal" As Claimed.</u>

Petitioner relies on channels D_1-D_m as the claimed "plurality of desired channels" but fails to disclose or render obvious the claims because channels D_1-D_m are not selected "from the digitized signal," as required.

Limitations 1[b] and 1[d] recite, respectively, receiving "an input signal," and "digitizing, by an ***analog-to-digital converter (ADC)*** coupled to the radio front end, the processed input signal to ***generate a digitized signal***." As shown in

Zhang's Figure 2, annotated below, for the disclosure of the claimed "digitized signal" generated by the ADC in limitation 1[d], Petitioner relies on the Zhang's Analog To Digital Converter 220, which generates a digitized signal and inputs that digitized signal to the Channel Demultiplexer 230. Pet., 22, 30-31.

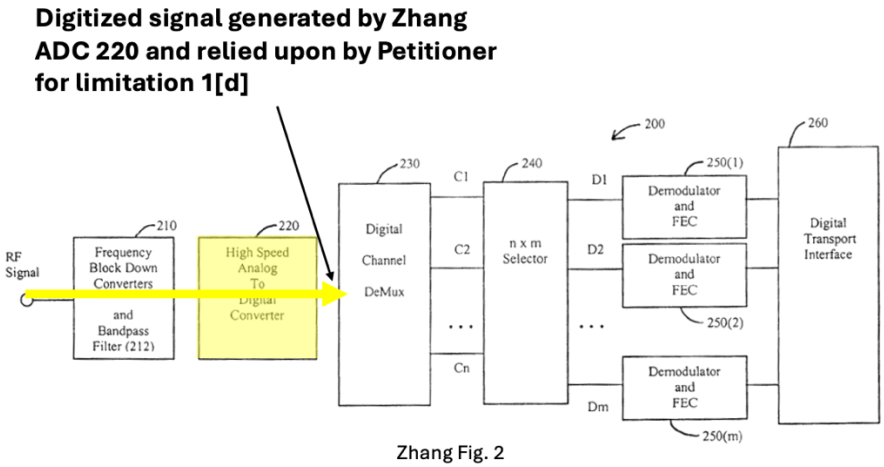

Zhang Fig. 2

Limitation 1[e] further requires "selecting … the plurality of desired channels ***from the digitized signal***." The antecedent basis for "the digitized signal" of limitation 1[e] is the digitized signal that is generated by the ADC in limitation 1[d]. *Univ. of Mass. v. L'Oréal S.A.*, 36 F.4th 1374, 1380 (Fed. Cir. 2022) (the term "the" "is the language for invoking an antecedent—for repeating, not departing from, the claim's prior reference to [the initial antecedent phrase]"); *see also Proveris Sci. Corp. v. Innovasystems, Inc.*, 739 F.3d 1367, 1373 (Fed. Cir. 2014) (finding that "[t]he phrase 'the image data' clearly derives antecedent basis from the 'image data'" previously recited in the claim.); *Eaton Corp. v. Rockwell*

Int'l Corp., 323 F.3d 1332, 1339 (Fed. Cir. 2003) ("By stating that the retaining step is performed 'during ***the*** gear shift ratio,' the claim requires this step to be performed during the particular sequence defined by the preamble as the gear ratio shift.") (emphasis in original); *NTP, Inc. v. Research In Motion, Ltd.*, 418 F.3d 1282, 1306 (Fed. Cir. 2005) (holding that "the at least one of the plurality of destination processors" refers back to the "plurality of destination processors" recited in the preamble).

As Dr. Russ explains below with reference to Zhang's annotated Figure 2, channels D_1-D_m (blue) in Zhang are not selected "from the digitized signal" (yellow) identified by Petitioner as the claimed "digitized signal." Instead, channels D_1-D_m (blue) are selected from the already extracted channels C_1-C_n (red):

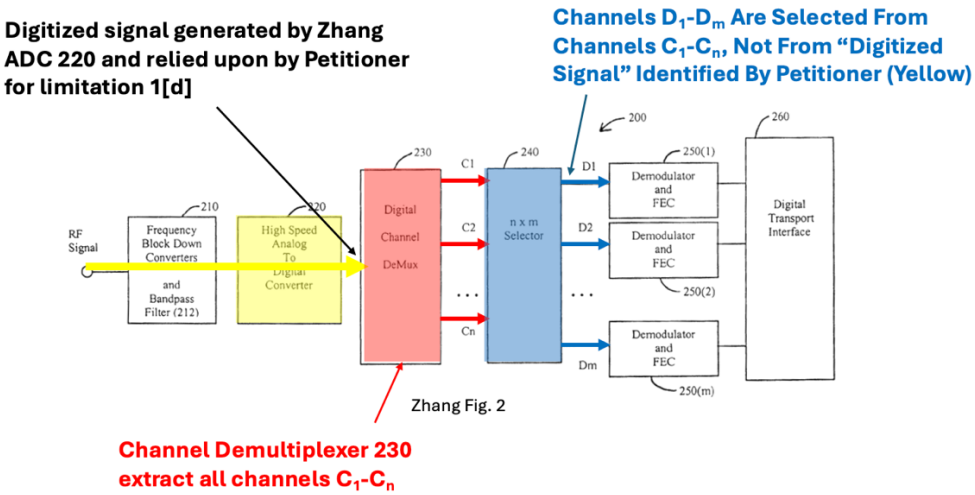

> Zhang states that the n×m selector 240 selects the desired channels D_1-D_m from the extracted channels C_1-C_n, not from the digitized input signal:
>
> > Still referring to FIG. 2, an n×m digital selector 240 receives the demultiplexed digital RF channels C_1 to C_n and then ***selects one or more of the RF channels D_1 to D_m from one or more of the digital RF channels C_1 to C_n***.
>
> Ex. 1013 [Zhang] [0028]; *see also id.*, [0039] ("digital selector 500 digitally ***selects one or more RF channels D_1 to D_m from the digital RF channels C_1 to C_n***.").

Ex. 2013 [Russ-Decl.] ¶ 92.

As Dr. Russ further explains, the embodiment of Zhang's ***selector*** 240 itself (relied upon by Petition at 36) confirms that Zhang selects the desired channels D_1-D_m from already extracted channels C_1-C_n, not from "the digitized signal":

> Zhang's Figure 5 shows an exemplary implementation of Zhang's selector 240, and confirms that Zhang selects the desired channels D_1-D_m from extracted channels C_1-C_n, not from the digitized input signal. Ex. 1013 [Zhang] [0038] ("FIG. 5 is a simplified high-level schematic diagram of an n×m digital selector 500, which in some embodiments of the present invention, can be used to implement digital selector 240 of FIG. 2.").
>
> In Zhang's Figure 5, annotated below, channels C_1-C_n (red), which were extracted from the digitized input signal by the digital channel demultiplexer 230, enter the selector on the left-hand side of the figure.

The circuitry within the selector 240 selects and outputs desired channels D_1-D_m (blue) from the channels C_1-C_n:

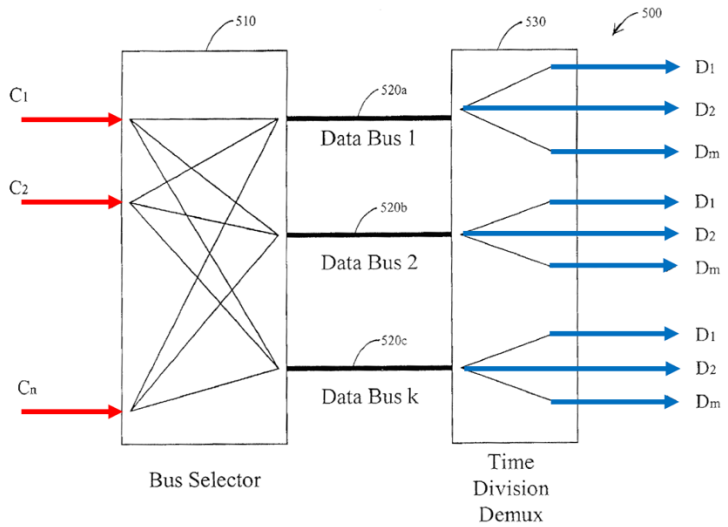

Fig. 5

Zhang's explanation of Figure 5 also confirms that the desired channels D_1-D_m are selected from channels C_1-C_n, not from the digitized input signal. Ex. 1013 [Zhang] [0039] ("digital selector 500 digitally ***selects one or more RF channels D_1 to D_m from the digital RF channels C_1 to C_n*** and then sends them to appropriate demodulators ….").

Ex. 2013 [Russ-Decl.] ¶¶ 93-95.

The demultiplexed channels C_1-C_n are not the "digitized signal" identified by Petitioner. As shown above, Petitioner relies on the digital signal generated by Zhang's ADC 220 and input into Channel Demultiplexer 230 as the claimed "digitized signal." Pet., 30-31. Selecting from the demultiplexed channels C_1-C_n is not the same as selecting "from the digitized signal" identified in Zhang by

Petitioner. Rather, as Dr. Russ explains, channels C_1-C_n are extracted, non-contiguous portions (*i.e.*, a subset) of the digitized input signal:

> First, C_1-C_n are channels that are separated out from the digitized input signal into distinct channels. Ex. 1013 [Zhang] [0028] ("A digital channel demultiplexer 230 then demultiplexes the multi-channel digital RF signal into separate digital RF channels C_1 to C_n."); [0010] ("A digital channel demultiplexer receives the multi-channel digital RF signal from the ADC and demultiplexes the multi-channel digital RF signal into separate digital RF channels.").
>
> Second, channels C_1-C_n together are generally only a non-contiguous subset of the digitized input signal. This is because there are frequency ranges that exist in the digitized input signal, including between the channels, that do not exist in the channels C_1-C_n. For example, frequency guard bands are generally placed between different RF channels in an input signal to avoid interference between channels. These exemplary frequency ranges would not be included in the demultiplexed channels C_1-C_n, even though they exist in the digitized input signal.

Ex. 2013 [Russ-Decl.] ¶¶ 97-98.

The '275 patent's specification confirms that Zhang's selection of desired channels D_1-D_m from channels C_1-C_n does not disclose selecting the desired channels "from the digitized signal." As Dr. Russ explains:

In all embodiments of the ’275 patent, the desired channels are selected from the digitized input signal. For example, in the ’275 patent’s Figure 2, annotated below, the input signal (yellow) is first digitized in the analog to digital converters (yellow). Ex. 1001 [’275] 5:48-51. Then, a bank of N mixers (blue) selects N desired channels from the digitized input signal. *Id*., 5:51-55, 5:63-6:6. The selected desired channels are then output to demodulators (green). *Id*., 7:10-14. This is in contrast to Zhang where, as explained above, the digitized input signal is demultiplexed into channels C_1-C_n, with those separate outputs C_1-C_n sent to the digital selector 240. The desired channels are then selected by the digital selector 240 from channels C_1-C_n, not from the digitized input signal.

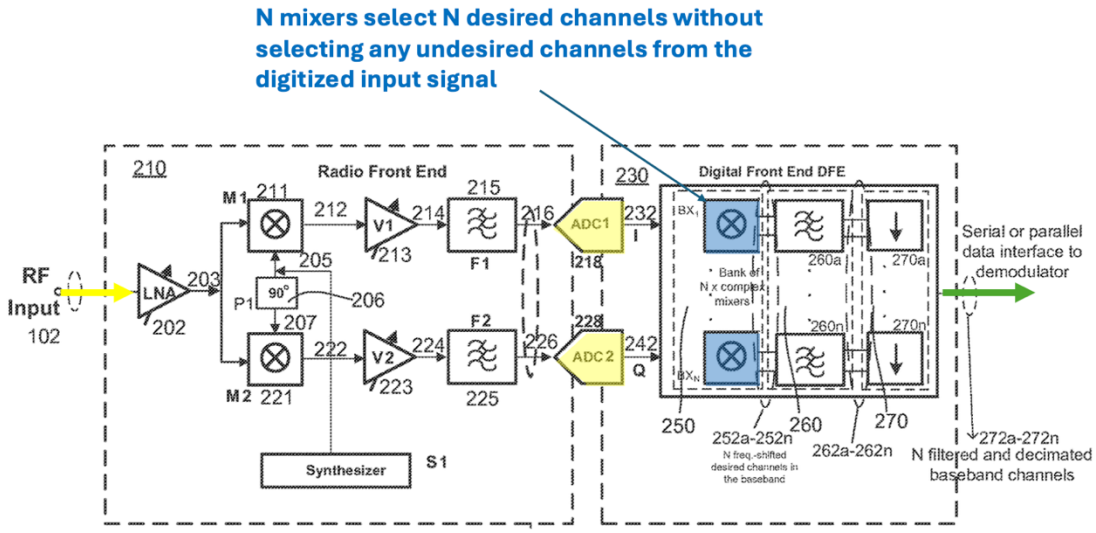

’275 Pat. Fig. 2 (modified and annotated)

Ex. 2013 [Russ-Decl.] ¶ 99.

A comparison of the claims of the ’275 patent with claims in US 11,381,866, which has a common specification with the ’275 patent, further confirms the

significance of selecting the desired channels "from the digitized signal." For example, claim 1 of the '866 patent recites a "digital front end" that is configured to "concurrently select and provide each of the plurality of desired channels without providing any of the plurality of undesired channels," but does not expressly recite that the selection must be "from the digitized signal." Ex. 2018 ['866-Patent] cl. 1. This is shown in the table below:

'275 Patent Limitation 1[e]	**'866 Patent Limitation 1[b]**
"selecting, by a digital frontend (DFE) coupled to the ADC, the plurality of desired channels from the digitized signal"	"a digital frontend (DFE) coupled to the wideband ADC, wherein the DFE is configured to concurrently select and provide each of the plurality of desired channels, via a serial interface, without providing any of the plurality of undesired channels."

As is shown in the comparison above, while claim 1 of the '275 patent recites that the selection of desired channels must be "from the digitized signal," claim 1 of the '866 patent does not explicitly recite the source signal from which the selection must be performed. Ex. 2013 [Russ-Decl.] ¶¶ 100-101. If claim 1 of the '275 patent were read so broadly as to cover the selection of Zhang's channels

D_1-D_m, then the language of the claim requiring that these channels be selected "from the digitized signal" would be rendered superfluous. *See SightSound Techs., LLC v. Apple Inc.,* 809 F.3d 1307, 1316 (Fed. Cir. 2015) ("This distinction [between two claims] further underscores that 'second memory' must be different…because otherwise the additional language… would be redundant."); *see also Curtiss-Wright Flow Control Corp. v. Velan, Inc.*, 438 F.3d 1374, 1381 (Fed. Cir. 2006) ("[C]laim differentiation takes on relevance in the context of a claim construction that would render additional, or different, language in another independent claim superfluous . . . ."); *see also Clare v. Chrysler Group LLC*, 819 F.3d 1323, 1330 (Fed. Cir. 2016) (explaining that the doctrine of claim differentiation applies across related patents).

For all these reasons, Petitioner's reliance on Zhang's channels D_1-D_m as the claimed "plurality of desired channels" fails to meet the claims because they are not selected "from the digitized signal" as required.

2. Zhang's Channels D_1-D_m Are Not Selected "From The Digitized Signal" Under Petitioner's Construction Of "Selecting."

In the co-pending IPR2024-00432 challenging a patent from the same specification as the '275 patent at issue here, Petitioner argues that the plain and ordinary meaning of selecting "is simply extracting a channel from the plurality of frequencies in the digitized RF signal." Ex. 2026 [Comcast-Reply] 24. Petitioner

conspicuously omits this proposed construction in this case—because it readily defeats Petitioner's mapping here. But Petitioner cannot escape its inconsistent arguments.

Limitation 1[e] requires "***selecting*** … the plurality of desired channels ***from the digitized signal***." Under Petitioner's construction of "selecting," this limitation would require that the desired channels be "extracted from the plurality of frequencies in the digitized RF signal." But channels D_1-D_m are ***not*** extracted from the digitized input signal. The inputs to Zhang's Selector 240 that selects D_1-D_m are already extracted channels C_1-C_n. The extraction was performed by Channel Demultiplexer 230, which outputs the individual demultiplexed channels C_1-C_n.[4] Thus, Petitioner's proposed construction of "selecting" readily rejects Petitioner's reliance on channels D_1-D_m as the claimed "desired channels."

Petitioner's expert confirmed the same at deposition. Mr. Lett expressly agreed that, under Petitioner's proposed construction, Zhang's Selector 240 "does not" perform any selection; rather, "[t]he selection is done by [Demultiplexer] 230." Ex. 2021 [Lett-Depo.] 82:16-18. Thus, Petitioner's theory fails because it

[4] For reasons stated in section III.A, *supra*, Zhang's Demultiplexer 230 also fails to disclose this limitation under Petitioner's construction because it does not "extract a channel," but indiscriminately separates all channels in the input signal.

does not disclose the claims under Petitioner's own construction. *Google LLC v. Neonode Smartphone LLC*, IPR2021-01041, Paper 52, 26 (Jan. 11, 2023) ("Because [the petitioner] has the burden of persuasion, [the patent owner] has no obligation to precisely define the [claim] term gliding . . . away or explain how the term differs from the term flick in [the reference].") (citing 37 C.F.R. § 42.104(b)(3); 35 U.S.C. §316(e)); *DISH Network LLC v. Sound View Innovations LLC*, IPR2020-01035, Paper 19, 14 (Jan. 19, 2021) (denying institution because Petitioner had failed to show that the claims are obvious based on the construction proposed by Petitioner).

Accordingly, Petitioner's reliance on channels D_1-D_m also fails under Petitioner's construction of "selecting."

3. Zhang Channels D_1-D_m Are Not Shown To Be Selected By A "Digital Front End"

Limitation 1[e] requires that selecting the plurality of desired channels be "by a digital frontend (DFE)." Ex. 1001 ['275] cl. 1. In its alternative theory relying on Zhang channels D_1-D_m as the claimed "desired channels," those channels are selected by Zhang's Selector 240. *See* Section III.B.1, *supra*. Petitioner, however, fails to show why Zhang's Selector 240 discloses a "digital front end (DFE)" as claimed.

Contrary to Petitioner's contention that Zhang's Selector 240 is a digital front end, Petitioner elsewhere confirms that Zhang's "Digital Channel Demultiplexer 230" alone, not Zhang's Selector 240, corresponds to the claimed "digital front end (DFE)." For example, Petitioner's expert opines that "Zhang discloses the same claimed system as in the '275 patent," and shows only Channel Demultiplexer 230 as corresponding to the '275 patent's Digital Front End (DFE), with Zhang's Digital Selector 240 corresponding to the ***output*** of the DFE:

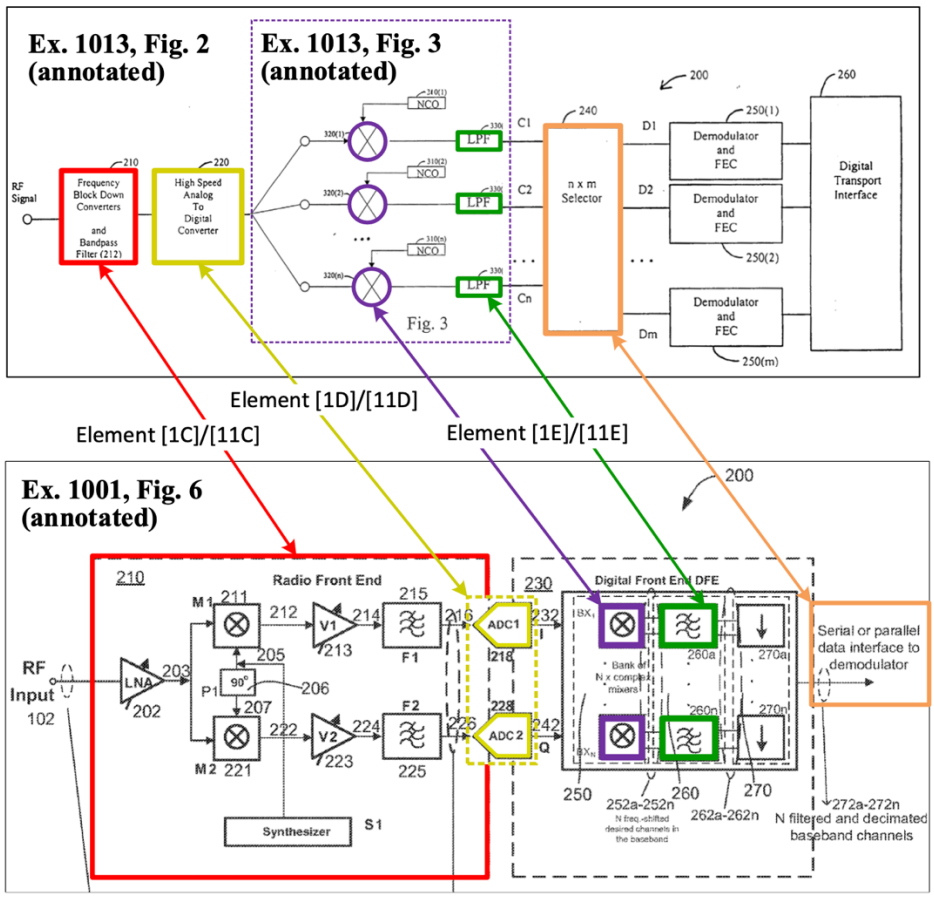

Ex. 1002 [Lett-1st-Decl.] ¶ 81. In the annotation provided by Petitioner above, the upper figure is Zhang's Figure 2, and the lower figure is Figure 6 of the '275 patent. In Figure 6 of the '275 patent (lower figure), the dotted box on the right-hand side of the figure is labeled "Digital Front End DFE" 230. As can be seen above, Petitioner has mapped Zhang's Selector 240 (upper figure) using the color orange to the arrow titled "serial or parallel data interface to demodulator" that is output from the digital front end 230 in the '275 patent (dotted box in the lower figure). Thus, Petitioner's expert has mapped Zhang's selector 240 to the ***output*** of the '275 patent's digital front end (DFE).

At deposition, Petitioner's expert confirmed that he is mapping Zhang's Selector 240 to the "output" of the claimed "digital front end" in the '275 patent, and further opined that it is "more logical" to do so:

> Q. Now, why did you map … the n×m selector 240 in Zhang to the output of the Digital Front End DFE arrow titled serial or parallel to demodulator in Figure 6 of the '866 patent?[5]
>
> A. Because the n×m selector outputs serial or parallel interface to a demodulator.
>
> Q. That's the one that you said is like a switch; right?
>
> A. Among other things.

[5] The '866 patent shares the same specification as the '275 patent.

…

Q. ***What is the basis of your opinion that the n×m Selector 240 in Zhang is analogous to the output of the digital front end 230 in Figure 6 of the '866 patent?***

A. As we've been talking about—and we can go through it in more detail if you want—the n×m selector—***n×m selector can output serial or parallel data to a demodulator.***

Q. Is that it?

A. Yes.

Q. So in your opinion, ***would it be wrong to map the n×m selector 240 from Zhang to the output of filters 260 within the digital front end in Figure 6 of the '866 patent?***

A. Well, the output of the Figure 6 annotated below is on the right side. ***And what we're mapping to is the output to demodulators. So it is more logical to map that to the output.*** And then we come along later and explain the decimation.

Ex. 2019 [Lett-Depo.] 145:16-147:13.[6]

Logically, if Zhang's selector 240 maps to the ***output*** of the digital front end, it cannot be the front-end itself. Petitioner's expert made a similar mapping when he compared Zhang's Figure 3 embodiment (which implements only Zhang's

[6] Objections by counsel are omitted.

digital channel demultiplexer 230) with the digital front end in the ’275 patent’s Figure 2. Specifically, Petitioner’s expert opined that “Zhang uses the same technique as described by the ’275 patent for selecting and outputting desired channels,” and provided the following annotation to show how, in his view, Zhang’s demultiplexer 230 corresponds to the claimed digital front end:

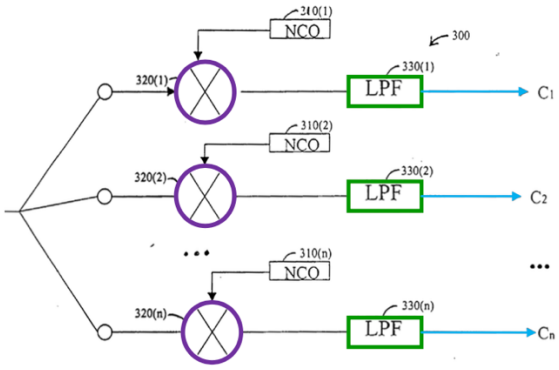

Fig. 3

Ex. 1013, Fig. 3 (annotated)

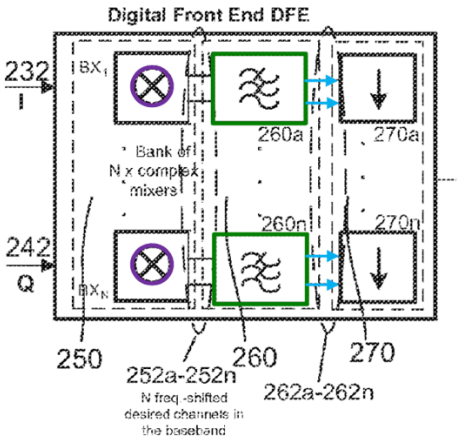

Ex. 1001, Fig. 2 (annotated)

Ex. 1002 [Lett-1st-Decl.] ¶ 131. Notably, the digital tuner 300 in Zhang, which Petitioner’s expert maps as corresponding to the ’275 patent’s digital front end, is an implementation of Zhang’s digital channel demultiplexer 230, not Zhang’s Selector 240. Ex. 1013 [Zhang] [0030] (“FIG. 3 is a simplified high-level schematic diagram of a digital tuner 300, which in some embodiments of the present invention, can be used to implement digital channel demultiplexer 230 of FIG. 2.”). Petitioner provides no explanation as to why and how Zhang’s selector 240 is a part of the claimed “digital front end (DFE).”

The Petition appears to argue that Zhang's selector 240 discloses the claimed digital frontend DFE merely because "it processes digital signals." Pet., 34. But at deposition, Petitioner's own expert expressly refuted this argument. Petitioner's expert at deposition opined that "anything that has some digital circuitry in it" is not automatically considered a "digital front end," and "you'd have to be more specific than that." Ex. 2021 [Lett-Depo.] 108:13-16. Mr. Lett further opined that "one would need to put it in the context of the type of product," and "you kind of need to look into details to understand exactly what's meant by digital front end for the particular use of that term." *Id*., 107:24-108:5, 108:13-109:3.

"In an *inter partes* review, the burden of persuasion is on the petitioner to prove unpatentability by a preponderance of the evidence, 35 U.S.C. § 316(e), and that burden never shifts to the patentee." *In re Magnum Oil Tools Int'l, Ltd*., 829 F.3d 1364, 1375 (Fed. Cir. 2016) (*quoting Dynamic Drinkware, LLC v. Nat'l Graphics, Inc*., 800 F.3d 1375, 1378 (Fed. Cir. 2015)). Furthermore, "mere conclusory statements" cannot satisfy Petitioner's burden. *In re Magnum Oil*, 829 F.3d at 1380. In accord, the Board has rejected flawed, inconsistent mapping similar to the one in this case by other petitioners:

> Having considered the additional briefing submitted since our Decision on Institution, we determine that Petitioner's mapping of the [claim to the reference] remains fatally flawed. Petitioner's obviousness

> contentions … include neither supporting evidence nor analysis to undergird its proposed mapping ….

Hulu, LLC v. Sound View Innovations, LLC, IPR2018-00582, Paper 34, 30 (August 5, 2019) (informative) (finding the claims were not shown to be unpatentable).

In the instant case, Petitioner has merely made a conclusory assertion that Zhang's Selector 240 is a part of the claimed "digital front end (DFE)." Pet., 34. Petitioner has provided no analysis or evidence to support its contention. Furthermore, its contention contradicts the testimony of its expert both in his declaration and at deposition. Therefore, Petitioner fails to meet its burden as a matter of law.

Nor can Petitioner attempt to meet its burden for the first time in its Reply. *Hulu, LLC v. Sound View Innovations, LLC*, Case IPR2018-00582, Paper 34, 30 (August 5, 2019) (informative) ("We also agree with Patent Owner … that Petitioner's reply arguments attempting to justify its mapping of the 'system application' to Hvasshovd's client are untimely."); *Intelligent Bio-Sys., Inc. v. Illumina Cambridge Ltd.,* 821 F.3d 1359, 1389-70 (Fed. Cir. 2016) ("Unlike district court litigation—where parties have greater freedom to revise and develop their arguments over time and in response to newly discovered material—the expedited nature of IPRs bring with it an obligation for petitioners to make their case in their petition to institute.").

Petitioner, thus, has failed to demonstrate disclosure or obviousness of a "digital front end (DFE)" that selects Zhang channels D_1-D_m.

IV. CONCLUSION

For the foregoing reasons, Petitioner has failed to demonstrate that any of the claims are unpatentable.

Respectfully submitted,

/ Parham Hendifar /

Parham Hendifar (Reg. No. 71,470)
Nathan Lowenstein, *pro hac vice*

LOWENSTEIN & WEATHERWAX LLP

Date: August 5, 2025

CERTIFICATE OF COMPLIANCE WITH TYPE-VOLUME LIMITS

This Patent Owner Response (the "POR") consists of 10,898 words, excluding table of contents, table of authorities, certificate of service, this certificate, or table of exhibits. The POR complies with the type-volume limitation of 14,000 words as mandated in 37 C.F.R. § 42.24. In preparing this certificate, counsel has relied on the word count of the word-processing system used to prepare the paper (Microsoft Word).

Respectfully submitted,

/ Parham Hendifar/

Date: August 5, 2025

CERTIFICATE OF SERVICE

The undersigned hereby certifies that the following documents were served by electronic service, by agreement between the parties, on the date signed below:

PATENT OWNER RESPONSE

EXHIBITS 2012-2027

The names and addresses of the parties being served are as follows:

Frederic M. Meeker fmeeker@bannerwitcoff.com
Craig W. Kronenthal ckronenthal@bannerwitcoff.com
H. Wayne Porter wporter@bannerwitcoff.com
Paul T. Qualey pqualey@bannerwitcoff.com
Joshua L. Davenport jdavenport@bannerwitcoff.com
ComcastIPRService@bannerwitcoff.com.

Respectfully submitted,

/ Keith Moore/

Date: August 5, 2025