UNITED STATES PATENT AND TRADEMARK OFFICE

BEFORE THE PATENT TRIAL AND APPEAL BOARD

COMCAST CABLE COMMUNICATIONS, LLC,
Petitioner,

v.

ENTROPIC COMMUNICATIONS, LLC,
Patent Owner.

Patent No. 11,785,275
Filing Date: September 30, 2022
Issue Date: October 10, 2023
Title: SYSTEM AND METHOD FOR RECEIVING A TELEVISION SIGNAL

Inter Partes Review No.: IPR2025-00180

DECLARATION OF DAVID B. LETT

IN SUPPORT OF PETITION FOR *INTER PARTES* REVIEW UNDER 35 U.S.C. §§ 311-319 AND 37 C.F.R. § 42.100 *et seq.*

Declaration in Support of Petition 1 of 3

TABLE OF CONTENTS

Page

1. INTRODUCTION 1

2. PROFESSIONAL BACKGROUND AND QUALIFICATIONS 2

3. MATERIALS CONSIDERED 8

4. UNDERSTANDING OF APPLICABLE LEGAL STANDARDS 12

5. THE RELEVANT ART AND LEVEL OF ORDINARY SKILL IN THE RELEVANT ART 17

6. CLAIM CONSTRUCTION 18

7. OVERVIEW OF THE '275 PATENT 21

7.1. Prosecution History 25

7.1.1. Prosecution History of the Parent 25

7.1.2. Prosecution History of the '275 Patent 26

7.2. Earliest Priority Date for the Claims 29

8. OVERVIEW OF THE PRIOR ART 29

8.1. Cable and Satellite Television Networks 29

8.2. Modulated RF Signals 32

8.2.1. Biphase Shift Keying 33

8.2.2. Quadrature Phase Shift Keying (QPSK) 33

8.2.3. 16-Quadrature Amplitude Modulation (QAM), 64-QAM, and 256-QAM 36

8.3. Radio Receivers or Tuners for Cable and Satellite Television Networks 38

8.3.1. Architecture of Low-IF receivers 40

8.3.2. Channel Selection based on Digital Filters 47

8.3.3. Stacking of Desired Channels before Demodulation 50

8.3.4. Decimation 50

8.3.5. Demodulation of Multiple Channels 51

8.4. Serial vs. Parallel Data Communication 54

8.5. U.S. Publication No. 2003/0056221 – Zhang (Ex. 1013) 55

8.6. U.S. Patent No. 7,237,214 – Pandey (Ex. 1014).....60

8.7. PCT Publication No. 2004/059933 – Zhang '933 (Ex. 1077) 63

8.8. Mirabbasi (Ex. 1018).....65

8.9. U.S. Publication No. 2004/0250284 – Dong (Ex. 1078) 67

9. OPINIONS WITH RESPECT TO THE '275 PATENT.....70

9.1. Zhang Anticipates (Ground A) and Renders Obvious (Ground B) Claims 1-3, 5, 7-13, 15, and 17-20. 70

9.1.1. Independent Claim 1 70

9.1.2. Dependent Claim 2 and 3.....110

9.1.3. Dependent Claim 5 116

9.1.4. Dependent Claim 7 118

9.1.5. Dependent Claim 8 120

9.1.6. Dependent Claim 9 122

9.1.7. Dependent Claim 10 123

9.1.8. Independent Claim 11 124

9.1.9. Dependent Claims 12 and 13 128

9.1.10. Dependent Claim 15.....129

9.1.11. Dependent Claim 17.....130

9.1.12. Dependent Claim 18.....130

9.1.13. Dependent Claim 19.....131

9.1.14. Dependent Claim 20.....131

9.2. Zhang in View of Pandey Renders Claims 2, 3, 12, and 13 Obvious (Ground C).....132

9.2.1. Dependent Claims 2 and 3 132

9.2.2. Dependent Claim 12 141

9.2.3. Dependent Claim 13 141

9.3. Zhang in view of Zhang '933 Renders Claims 2 and 12 Obvious (Ground D).....141

9.3.1. Dependent Claims 2 and 12 142

9.4. Zhang in view of Mirabbasi Renders Claims 4 and 14 Obvious (Ground E) 147

9.4.1. Dependent Claim 4 148

9.4.2. Dependent Claim 14 155

9.5. Zhang in view of Dong Renders Claims 5, 6, 15, and 16 Obvious (Ground F) 155

9.5.1. Dependent Claim 5 156

9.5.2. Dependent Claim 6 161

9.5.3. Dependent Claim 15 165

9.5.4. Dependent Claim 16 166

9.6. Alternate Arguments and Grounds based on Means-Plus-Function Construction of "radio front end" and "digital frontend" 166

9.6.1. Claims 11, 12-13, 15, and 17-20 based on Zhang (Grounds A/B) Claims 12-13 based on Ground C, Claim 12 based on Ground D, and Claims 15-16 based on Ground F 166

9.6.2. Claims 11-15 and 17-20 based on Zhang in view of Mirabbasi (Ground E) 171

9.6.3. Claims 12 and 13 based on Zhang in view of Mirabbasi and Pandey (Ground G), Claim 12 based on Zhang in view of Mirabbasi and Zhang '933 (Ground H), and Claims 15-16 based on Zhang in view of Mirabbasi and Dong (Ground I) 180

10. CONCLUSION 182

CLAIM LISTING APPENDIX 183

I, David B. Lett, declare that I have personal knowledge of the facts set forth in this declaration and, if called to testify as a witness, could and would do so competently.

1. INTRODUCTION

1. I have been retained as an expert witness on behalf of the Petitioner, Comcast Cable Communications, LLC, for the above-referenced *inter partes* review proceeding.

2. I have been asked to provide a declaration regarding certain matters pertaining to U.S. Patent No. 11,785,275 ("the '275 patent") (Ex. 1001) and the unpatentability grounds set forth in the Petition for this proceeding. My experience with television distribution systems, Set Top Boxes (STBs), modulation schemes, radio frequency systems, Video on Demand (VOD), and content delivery systems provides me with an understanding of the subject matter described and claimed in the '275 patent.

3. I am being compensated at my usual consulting rate or testimony rate of $385 per hour. My compensation is in no way dependent upon my opinions or testimony or the outcome of this proceeding. I have no financial interest in the party or in the outcome of this proceeding.

2. PROFESSIONAL BACKGROUND AND QUALIFICATIONS

4. I am a technical consultant and product development industry veteran with expertise in electronics, software, hardware, video, audio, and data communications, having led product development organizations in cable, satellite, consumer electronics, home automation, asset tracking, remote tank logistics, and alarm industries. My current curriculum vitae is attached as Ex. 1003 and some highlights follow.

5. I earned my B.S. in Electrical Engineering (1982) with high honors from the University of Tennessee in Knoxville, Tennessee. I also attended the Georgia Institute of Technology from 1986 to 1987, completing 40% of the required degree hours for the M.S. Electrical Engineering program.

6. From 1982 to 1985, I worked at Scientific Atlanta as an Electrical Engineer designing video, audio, and data communications equipment for the cable television industry. I designed software and hardware including addressable data transmitters, video sync suppression scramblers, transaction format converters, and data channel monitors for addressable Cable Television systems and Set Top Boxes.

7. From 1983 to 1985, while working at Scientific Atlanta, I also worked as an Assistant Professor at DeVry Institute of Technology, teaching courses in electronics and microprocessor hardware/software.

8. From 1985 to 1990, I worked at Wegener Communications as a Senior Electrical Engineer, designing satellite communications equipment including forward error correction (FEC) coding systems, PSK modems, and analog control systems for RF modulators and PSK demodulators. I was promoted to the Hardware Engineering Manager, where I managed product development of video, audio, and data satellite receivers, modulators, graphics display systems, DSP-based compandors, FSK and PSK satellite modems, multiplexers, forward error correction (FEC) codecs, RF upconverters and downconverters, and baseband analog and digital processing components.

9. In 1990, I returned to Scientific Atlanta, which was acquired by Cisco in 2006. I worked as Engineering Manager running the set top box engineering group where I was promoted to Director and Vice President during my tenure until 2011. I led the design of many cable set top boxes and systems through the evolution of analog video, addressability, downloadable software, electronic program guides, digital video, VOD, software applications, high-definition TV, DVR, DOCSIS, full spectrum tuners, and multiroom DVR. These systems implemented various technologies including DOCSIS 1/2/3 and hybrid gateways, 802.11, IPTV, DVR, cable modems, ADSL, VDSL, DVB-T/C/S, bootloaders, factory diagnostics, application frameworks, Nagra, DRMs, conditional access, secure microprocessors, device management, Android, Adobe Flash, Linux, DVD play/record, MPEG-4,

MPEG-2, H.264, NTSC, PAL, DAVIC, MoCA, high-performance CPUs, cablecards, network processors, HDMI, multiple video/audio display interfaces, 2D/3D graphics, multiple RF tuners, and full spectrum tuners.

10. From 2011 to 2016, I worked for EchoStar Technologies, which served as the product development organization for sister company DISH Network. I served as Vice President of Engineering and was the Head of the Atlanta research and development center. I led the development of satellite set top boxes, consumer electronic equipment, and a home automation and security system. Technologies used included video/audio, IoT, H.265, HEVC, 3D, Satellite, wireless, MoCA, transcoding, embedded C Linux applications, mobile applications (IOS and Android), SaaS, web applications (JavaScript, HTML), BSS/OSS, AWS cloud storage, 2-way video/audio streaming, authentication, and VoIP.

11. In 2016, I started an independent consulting business in technology and intellectual property projects. I have consulted in various technology areas and industries including consumer electronics, Internet of Things (IoT), cable, satellite, television, media, and cryptocurrency.

12. From 2019 to 2022, I worked as Chief Technology Officer for Telular, an Ametek company. I was responsible for the development of Industrial Internet of Things (IIoT) recurring revenue solutions, combining wireless technologies,

purpose-built hardware, and SaaS in the commercial telematics, security and home automation markets and sold under the SkyBitz and Telguard brands.

13. My record of professional service includes awards on products I designed and developed from several organizations in my field of expertise, including Best of Show, Technology Emmy, and Best of Innovations.

14. I am a named inventor on at least 117 patents and published patent applications corresponding to the areas of my professional work. The patents and published applications involving video and audio technologies include:

- U.S. Patent No. 9,882,736 titled "Remote Sound Generation for a Home Automation System"
- U.S. Patent No. 9,615,139 titled "Determining Device That Performs Processing of Output Pictures"
- U.S. Patent No. 8,549,567 titled "Media Content Sharing Over a Home Network"
- U.S. Patent No. 8,161,388 titled "Interactive discovery of display device characteristics"

- U.S. Patent Nos. 8,120,924, 7,240,217, 6,785,817, 6,564,324, 6,212,278, and 5,440,632 titled "Reprogrammable Subscriber Terminal"

- U.S. Patent No. 7,908,625 titled "Networked Multimedia System"

- U.S. Patent Nos. 7,861,272 and 7,849,486 titled "Networked Subscriber Television Distribution"

- U.S. Patent Nos. 7,774,820 and 7,069,578 titled "Settop Cable Television Control Device and Method Including Bootloader Software and Code Version Table for Maintaining and Updating Settop Receiver Operating System Software"

- U.S. Patent No. 5,771,064 titled "Home Communications Terminal having an Applications Module"

- U.S. Patent No. 5,715,515 titled "Method and Apparatus for Downloading On-Screen Graphics and Captions to a Television Terminal"

- U.S. Patent No. 5,657,414 titled "Auxiliary Device Control for a Subscriber Terminal"

- U.S. Patent No. 5,592,551 titled "Method and Apparatus for Providing Interactive Electronic Programming Guide"
- U.S. Patent No. 5,539,822 titled "System and Method for Subscriber Interactivity in a Television System"
- U.S. Patent No. 5,357,276 titled "Method of Providing Video On Demand with VCR Like Functions"
- U.S. Patent Application Publication Nos. 2004/0068753 and 2008/0072272 titled "Video Transmission Systems and Methods for a Home Network"
- U.S. Patent Application Publication No. 2004/0133911 titled "Subscriber Network in a Satellite System"

15. I have a general understanding of the U.S. patent prosecution process and of the novelty and non-obviousness requirements for patentability.

16. I believe that my extensive industry experience and educational background qualify me as an expert in the relevant field of digital signal processing (DSP) and radio frequency (RF) tuning systems for satellite and/or cable communications. I am knowledgeable of the relevant skill set that would have been possessed by a hypothetical person of ordinary skill in the art at the time of the

invention of the ’275 patent, which I (as I discuss below) understand is early 2009 or early 2010.

3. MATERIALS CONSIDERED

17. In formulating my opinion, I reviewed and considered the ’275 patent (U.S. Pat. No. 11,785,275 to Reddy, et al.) (Ex. 1001), as to which I am offering my opinion regarding the validity of certain claims, as discussed herein.

18. In preparing this declaration, I also reviewed and considered the Petition and the file history of the ’275 patent (included in Ex. 1004) as well as the following references:

Ex. 1001:	U.S. Patent No. 11,785,275 (“the ’275 patent”)
Ex. 1003:	Curriculum Vitae of David B. Lett
Ex. 1004:	Certified Prosecution History of the ’275 patent
Ex. 1005:	Certified Prosecution History of U.S. Patent No. 11,490,152 (“the parent”)
Ex. 1006:	Reserved
Ex. 1007:	Certified Prosecution History of U.S. Provisional App. No. 61/170,526 (“’526 provisional”)
Exs. 1008-1012:	Reserved
Ex. 1013:	U.S. Pub. No. 2003/0056221 (“Zhang”)
Ex. 1014:	U.S. Patent No. 7,237,214 (“Pandey”)

Ex. 1015:	Excerpts of "IEEE Std 100-2000, The Authoritative Dictionary of IEEE Standards Terms, Seventh Edition" (IEEE Press. 2000) ("IEEE Std 100")
Ex. 1016:	Excerpts of Jan M Rabaey, "Digital Integrated Circuits: A Design Perspective" (Pearson, 2nd ed. 2002) ("Rabaey")
Ex. 1017:	A. P. Chandrakasan, "Ultra low power digital signal processing," Proceedings of 9th International Conference on VLSI Design, Bangalore, India, 1996, pp. 352-357 ("Chandrakasan")
Ex. 1018:	S. Mirabbasi and K. Martin, "Classical and Modern Receiver Architectures," IEEE Communications Magazine, vol. 38, no. 11, pp. 132-139, November 2000 ("Mirabbasi")
Ex. 1019:	U.S. Patent No. 6,061,406 ("Carson")
Ex. 1020:	Reserved
Ex. 1021:	Data-Over-Cable Service Interface Specifications, DOCSIS 2.0, Radio Frequency Interface Specification, CM-SP-RFIv2.0-I11-060602
Ex. 1022:	Reserved
Ex. 1023:	Reserved
Ex. 1024:	Reserved

Ex. 1025:	J. Crols and M. S. J. Steyaert, "Low-IF topologies for high-performance analog front ends of fully integrated receivers," IEEE Transactions on Circuits and Systems II: Analog and Digital Signal Processing, vol. 45, no. 3, pp. 269-282, March 1998 ("Crols")
Ex. 1026:	Reserved
Ex. 1027:	U.S. Patents and Patent Applications Family Tree for U.S. Patent No. 11,785,275
Exs. 1028-1032:	Reserved
Ex. 1033:	Excerpts of W. Ciciora, J. Farmer, D. Large, and M. Adams, "Modern Cable Television Technology: Video, Voice, and Data Communications" (2nd ed. 2004) ("Ciciora")
Ex. 1034:	Excerpts of J. Crols and M. Steyaert, "CMOS Wireless Transceiver Design" (1997)
Ex. 1035:	U.S. Patent No. 7,340,230 ("Khoini-Poorfard")
Ex. 1036:	U.S. Pub. No. 2003/0217362 ("Summers")
Ex. 1037:	U.S. Pub. No. 2006/0256799 ("Eng")
Ex. 1038:	U.S. Pub. No. 2006/0083335 ("Seendripu")
Ex. 1039:	Excerpts of Chris Bowick, "RF Circuit Design" (2nd ed. 2008)

Ex. 1040:	Reserved
Ex. 1041:	Excerpts of Roland Priemer, "Introductory Signal Processing" (1991)
Ex. 1042:	U.S. Patent No. 7, 272,375 ("Tuttle")
Ex. 1043:	U.S. Patent No. 7,130,576 ("Gurantz")
Ex. 1044:	U.S. Patent No. 5,278,837 ("Kelley")
Ex. 1045:	Jeffrey Hugh Reed, "Software Radio: A Modern Approach to Radio Engineering" (2002)
Ex. 1046:	U.S. Patent No. 7,213,042 ("Cannon")
Ex. 1047:	Reserved
Ex. 1048:	Excerpts of William Buchanan, "Computer Busses" (2000) ("Buchanan")
Ex. 1049:	U.S. Patent No. 7,079,528 ("Ziegler")
Ex. 1050:	Excerpts of "Software Defined Radio: Enabling Technologies" (Walter H.W. Tuttlebee ed., 2003)
Ex. 1051:	U.S. Pub. No. 2005/0183015 ("Dunton")
Exs. 1052-1072:	Reserved
Ex. 1073:	Expert Declaration of Dr. Sylvia Hall-Ellis
Ex. 1074:	Reserved
Ex. 1075:	U.S. Patent No. 6,791,995 ("Azenkot")

Ex. 1076: U.S. Patent No. 6,542,203 ("Shadwell")

Ex. 1077: International Publication No. WO 2004/059933 ("Zhang '933")

Ex. 1078: U.S. Pub. No. 2004/0250284 ("Dong")

Ex. 1079: U.S. Patent No. 3,968,444 ("Tenny")

4. UNDERSTANDING OF APPLICABLE LEGAL STANDARDS

19. Although I am not an attorney, I have a general understanding of the applicable legal standards pertaining to the patentability issues presented in this proceeding. I understand that the Petitioner is challenging the patentability of the claims of the '275 patent based on the following grounds:

- Ground A: Claims 1-3, 5, 7-13, 15, and 17-20 anticipated by Zhang under pre-AIA 35 § 102(b).
- Ground B: Claims 1-3, 5, 7-13, 15, and 17-20 as obvious under pre-AIA § 103(a) based on Zhang.
- Ground C: Claims 2, 3, 12, and 13 as obvious under pre-AIA § 103(a) based on Zhang in view of Pandey.
- Ground D: Claims 2 and 12 as obvious under pre-AIA § 103(a) based on Zhang in view of Zhang '933.
- Ground E: Claims 4, 11-15, and 17-20 as obvious under pre-AIA § 103(a) based on Zhang in view of Mirabbasi.

- Ground F: Claims 5, 6, 15, and 16 as obvious under pre-AIA § 103(a) based on Zhang in view of Dong.
- Ground G: Claims 12 and 13 as obvious under pre-AIA § 103(a) based on Zhang in view of Mirabbasi and Pandey.
- Ground H: Claim 12 as obvious under pre-AIA § 103(a) based on Zhang in view of Mirabbasi and Zhang '933.
- Ground I: Claims 15 and 16 as obvious under pre-AIA § 103(a) based on Zhang in view of Mirabbasi and Dong.

20. I understand that, in this *inter partes* review, Petitioner has the burden of proving that each challenged claim is unpatentable by a preponderance of the evidence.

21. I understand that to be valid, a patent claim must be "novel," and is invalid if "anticipated" by a single prior art reference. I further understand a reference anticipates if it discloses each and every element as arranged in the claim so as to enable a person of ordinary skill in the art to make and use the claimed invention without undue experimentation.

22. I understand that a patent claim is unpatentable if, at the time of the invention, it would have been obvious to one of ordinary skill in the art to combine the teachings of the prior art to yield the patent claim. It is my understanding that this determination is made after weighing the following factors: (1) the level of

ordinary skill in the pertinent art; (2) the scope and content of the prior art; (3) the differences between the prior art as a whole and the claim at issue; and (4) as appropriate, other objective considerations identified below.

23. It is my understanding that the prior art and claimed invention should be viewed through the knowledge and understanding of a person of ordinary skill in the art – one should not use his or her own insight or hindsight in deciding whether a claim is obvious. I further understand that a claim may be rendered obvious if a person of ordinary skill in the art can implement the claimed invention as a predictable variation of a known product. I further understand that a person of ordinary skill in the art is presumed to have knowledge of the relevant prior art at the time of the claimed invention, which comprises any prior art that was reasonably pertinent to the particular problems the inventor faced.

24. I understand that a showing of obviousness requires some articulated reasoning with a rational underpinning to support the combination of the references. I understand that in consideration of the issue of obviousness it is important to identify whether a reason existed at the time of the invention that would have led a person of ordinary skill in the pertinent art to combine elements of the references in a way that yields the claimed invention.

25. I understand that a claim may be considered unpatentable for obviousness for various reasons. I have been informed that the following exemplary rationales may support a finding of obviousness:

(A) combining prior art elements according to known methods to yield predictable results;

(B) substituting one known element for another to obtain predictable results;

(C) use of a known technique to improve similar devices in the same way;

(D) applying a known technique to a known device ready for improvement to yield predictable results;

(E) choosing from a finite number of identified, predictable solutions with a reasonable expectation of success;

(F) known work in a field that prompts variations in the work in the same or a different field that leads to predictable results; and

(G) some teaching, suggestion, or motivation in the prior art that would have led a person of ordinary skill in the art to modify a prior art reference or combine multiple prior art references or teachings to arrive at the claimed invention.

26. I understand that various objective or "real world" factors may be indicative of non-obviousness. I understand that such factors include:

(A) the commercial success of the claimed invention;

(B) the existence of a long-felt, unresolved need for a solution to the problem solved by the claimed invention;

(C) failed attempts to solve the problem solved by the claimed invention;

(D) copying of the claimed invention;

(E) unexpected results of the claimed invention;

(F) praise for the claimed invention by others in the relevant field; and

(G) willingness of others to accept a license under the patent because of the merits of the claimed invention.

27. It is my understanding that the prior art references themselves may provide a suggestion, motivation, or reason to combine, but other times the link may be based on the common sense of the person of ordinary skill in the pertinent art. I further understand that obviousness analysis recognizes that market demand, rather than scientific literature, often drives innovation, and market demand is sufficient motivation to combine references.

28. It is my understanding that a particular combination may be proven obvious merely by showing that it was obvious to try the combination. For example, common sense is a good reason for a person of ordinary skill to pursue known options when there is a design need or market pressure to solve a problem and there are a finite number of identified, predictable solutions.

29. I further understand that a proper obviousness analysis focuses on what was known or obvious to a person of ordinary skill in the art, not just the patentee. Accordingly, it is my understanding that any need or problem known in the field at the time of invention and addressed by the patent can provide a reason for combining the limitations in the manner claimed.

5. THE RELEVANT ART AND LEVEL OF ORDINARY SKILL IN THE RELEVANT ART

30. I understand that obviousness is determined from the vantage point of a person of ordinary skill in the relevant art at the time of the alleged invention ("POSITA"). The '275 patent is directed to a wideband receiver system 200 "capable of receiving multiple desired television channels that extend over multiple non-contiguous portions of the broad frequency spectrum." Ex. 1001, 1:36-39. I understand that a person of ordinary skill in the art is one who is presumed to be aware of all pertinent art, thinks along conventional wisdom in the art, and is a person of ordinary creativity.

31. I believe that a person of ordinary skill in the art of the '275 patent, at the time of the alleged invention of the '275 patent, would have a degree in electrical engineering or a similar discipline, along with three-to-four years of experience with digital signal processing (DSP) and radio frequency (RF) tuning systems for satellite and/or cable communications. Additional education may substitute for professional

experience, and significant work experience may substitute for formal education. I worked in the relevant field with such persons at, and leading up to, the time of the alleged invention of the ’275 patent, and thus, I am familiar with the knowledge that such persons had at the time (*i.e.*, early 2009 or early 2010). At that time, I had a skill level that was at least as high as the skill level I describe above for a person of ordinary skill in the art of the ’275 patent.

32. All of my statements in this declaration regarding what a person of ordinary skill in the art would have known, understood, appreciated, been motivated to do, etc., refer to a person of ordinary skill in the art in early 2009 to early 2010, before the earliest claimed priority date of the ’275 patent.

6. CLAIM CONSTRUCTION

33. I understand that my analysis requires an understanding of the scope of the claims of the ’275 patent. I understand that claim terms subject to *inter partes* review, absent some other definition provided in the patent, are given their ordinary meaning to a person of ordinary skill in the art in light of the patent specification. Therefore, in my analyses given below, I have assumed that all claim terms are given their ordinary interpretation as would have been understood by a POSITA reading the patent specification as of the priority date. I further understand that certain claim terms may be means plus function limitations. In particular, I understand that a “means plus function” limitation should be interpreted to cover only the

corresponding structure described in the specification that performs the recited function, and equivalents thereof. I also understand that a limitation will be presumed to be a means plus function limitation if (a) the claim limitation uses the phrase "means for"; (b) the "means for" is modified by functional language; and (c) the phrase "means for" is not modified by sufficient structure for achieving the specified function. I understand that a structure will be considered structurally equivalent to the corresponding structure identified in the specification only if the differences between them are insubstantial. For example, a structure may be deemed to be a structural equivalent to the corresponding structure where the structure performs the same function in substantially the same way to achieve substantially the same result.

34. Though no claims in the '275 patent include "means for" language, I have been asked to consider a potential construction of "radio front end" in claim 11 as a means-plus-function limitation. Should this term be construed as such, the corresponding structure that performs the recited function for this limitation (which is the function of "process the input signal" recited in claim 11) is the radio front end 210 illustrated in Figure 2 or the radio front end 410 illustrated in Figure 4. Ex. 1001, Figs. 2, 4. I note that the internal components of the radio front end 210 and the radio front end 410 are the same. Specifically, each includes a low noise amplifier (LNA) (e.g., LNA 202 in Figure 2 and LNA1 in Figure 4), two mixers

(e.g., mixers 211 and 221 in Figure 2 and mixers 411 and 421 in Figure 4), two more amplifiers (e.g., amplifiers 213 and 223 in Figure 2 and amplifiers 413 and 423 in Figure 4) and two filters (e.g., filters 215 and 225 in Figure 2 and filters 415 and 425 in Figure 4). Ex. 1001, 4:43-5:47, 7:31-46, Figs. 2, 4. A POSITA would have understood that any one of these components processes the RF input signal that is input to the radio front end 210 or radio front end 410. Lastly, as I discuss in my detail analysis below, the prior art discloses the "radio front end" limitation whether or not it is construed as a means-plus-function limitation.

35. I have also been asked to consider a potential construction of "digital frontend (DFE)" in claims 11, 12, and 13 as a means-plus-function limitation. Should this term be construed as such, the corresponding structure that performs the recited functions for this limitation (which are the functions of "select the plurality of desired channels from the digitized signal and output the selected plurality of desired channels to at least one demodulator as a digital datastream" recited in Elements [11E]-[11F], "output the digital datastream via a serial interface" recited in claim 12, and "output the digital datastream via a parallel interface" recited in claim 13) is the digital front end 230 illustrated in Figure 2. Ex. 1001, 5:56-7:20, Figs. 2, 3. The digital front end 230 in Figure 2, for example, shows a bank of N complex mixers 250, a bank of filters 260, and a bank of decimators 270. Ex. 1001, 5:56-6:20, Fig. 2. One of the paths through the digital front end 230 is shown in

more detail in Figure 3. Ex. 1001, 6:21-23. Therefore, Figure 3 shows that the digital front end 230 from Figure 2 includes a mixer 300 that includes four multipliers 313, 315, 323, and 325 and two adders 317 and 327. Ex. 1001, 6:21-7:2. The ’275 patent also discloses that the multipliers receive the $\cos(\omega_{ci}t)$ and $\sin(\omega_{ci}t)$ signals from numerically controlled oscillators (NCOs). Ex. 1001, 6:35-7:2. Figure 3 also shows that the two outputs of the mixer 300 are then filtered by filters 330 and 340 and decimated by decimator 350. Ex. 1001, 7:3-15. I note that the ’275 patent indicates that decimators are optional. Ex. 1001, 3:8-10, 6:13-19. Indeed, a POSITA would have understood that the recited functions of the claims (identified above) do not require decimating and could be performed by the mixers/multipliers and filters alone. Lastly, as I discuss in my detailed analysis below, the prior art discloses the “digital frontend (DFE)” limitation whether or not it is construed as a means-plus-function limitation.

7. OVERVIEW OF THE ’275 PATENT

36. The ’275 patent describes a wideband receiver system 200 “capable of receiving multiple radio frequency channels located in a broad radio frequency spectrum.” Ex. 1001, 1:33-35.

37. The ’275 patent states that the system groups the desired channels that extend over non-contiguous portions of the frequency spectrum “into a contiguous, or substantially-contiguous, frequency spectrum” to “increase the dynamic range

without requiring expensive data conversion, filtering, and channel selection at the demodulator." Ex. 1001, 1:35-40, 2:44-46. According to the '275 patent, a receiver is "wideband" if it is "designed to concurrently receive several TV channels." *Id.*, 1:42-43. Figure 2 is a "schematic block diagram of a wideband receiver system 200." *Id.*, 4:40-41.

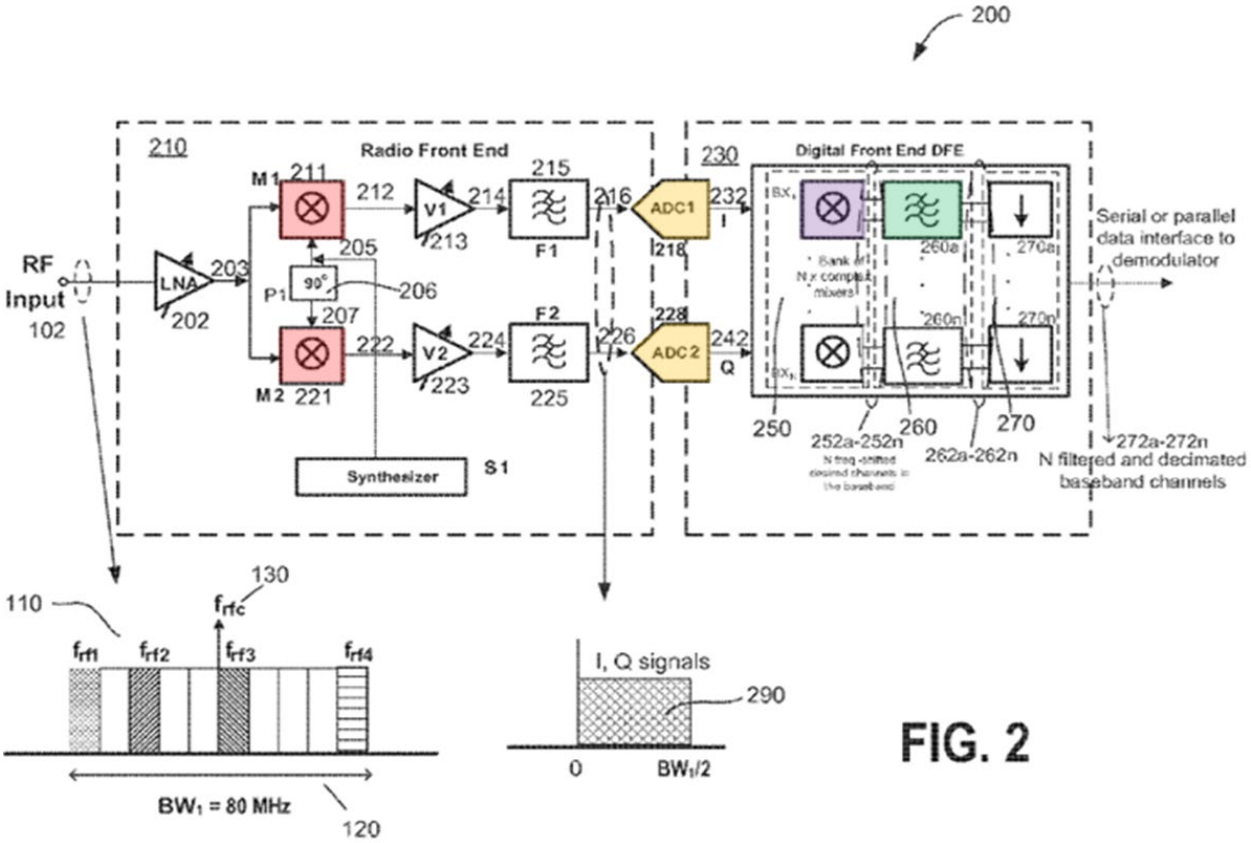

FIG. 2

Ex. 1001, Fig. 2 (annotated)

38. The wideband receiver system 200 receives both desired and undesired television channels as frequencies dispersed within a frequency bandwidth BW_1. Ex. 1001, Abstract, 1:35-40. Mixers "M1" and "M2," which are shown in red above, "generate an in-phase signal 212 and a quadrature signal 222 that have a phase shift

of 90 degree between them" and that have been downconverted to "the baseband or low intermediate frequency (IF) band." Ex. 1001, 2:64-3:1, 4:65-5:4, *see* also 2:10-12. "[U]nwanted frequency components" are filtered from the in-phase signal and the quadrature signal by respective filters 215 and 225. Ex. 1001, 5:22-29. The filtered signals are then individually digitized by wideband analog-to-digital converters ADC1 and ADC2 (**gold**) to generate a digital in-phase (I) signal 232 and a digital quadrature (Q) signal 242. Ex. 1001, 3:1-3, 5:53-56. U.S. Provisional App. No. 61/170,526 ("the '526 provisional"), which the '275 patent incorporates by reference, admits that the left side of Figure 2 (up to and including ADC1 and ADC2) "is similar to conventional tuners." Ex. 1007, p. 5; Ex. 1001, 1:6-28.

39. The digital I and Q signals 232 and 242 are input to a bank of N complex mixers 250 (one of which is shown above in **purple**) in a digital front end 230, where "N is an integer value corresponding to the number of desired RF channels." Ex. 1001, 5:56-60. "Each of the N complex mixers … extract[s] a different one of the desired channels" from the I and Q signals 232 and 242 and "frequency-shifts the extracted signals to the baseband frequency." Ex. 1001, 6:8-11. An associated filter module of filters 260a-260*n* (one of which is shown above in **green**) filters the frequency-shifted desired channel. Ex. 1001, 6:11-13.

40. Figure 3 "is a simplified circuit diagram of one of the signal paths 272a to 272n of digital front end 230" and shows elements in one of the rows of digital front end 230 in Figure 2. Ex. 1001, 6:21-23.

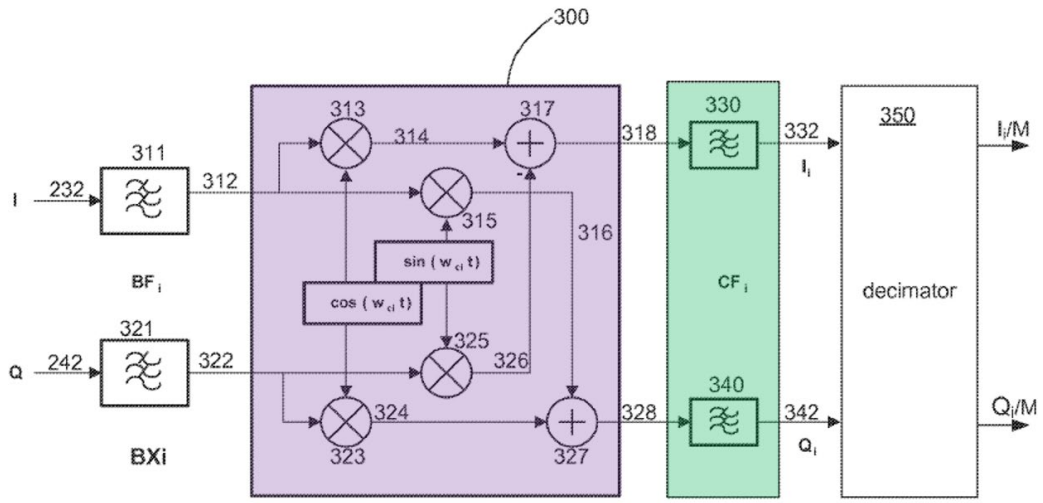

FIG. 3

Ex. 1001, Fig. 3 (annotated)

41. Mixer 300 (**purple**) represents one of the complex mixers 250 and has multipliers 313, 315, 323, and 325 and adders 317 and 327. Ex. 1001, 6:33-43. "[C]omplex mixer 300 causes a frequency shift of the filtered components 312 and 322 to respective baseband signals 318 and 328 in the digital domain" by using a frequency ω_{ci} that is chosen such that "each one of the desired channels embedded in the digital signals I 232 and Q 242 will be downshifted to the baseband." Ex. 1001, 6:43-62. The baseband signals 318 and 328 are filtered by filters 330 and 340 (**green**) that are "one of the filters 260a-n" shown in Figure 2. Ex. 1001, 7:3-5.

42. After decimation, "the N desired baseband channels will be sent as a serial or parallel digital data stream to a demodulator using a serial or parallel data interface according to commonly known methods." Ex. 1001, 7:16-20. The '275 patent does not provide any details of how N x 2 signals (N channels, with an I and a Q signal for each channel) might be manipulated, combined, and/or otherwise processed between the decimators 270 and a demodulator. Rather, the '275 patent admits that this is performed "according to commonly known methods." *Id*.

7.1. Prosecution History

43. The '275 patent claims priority to a number of applications. In particular, it is a direct continuation of U.S. Application No. 17/862,946, which became U.S. Patent No. 11,490,152 ("the parent"), which has very similar claims. The main difference is that the '275 patent claims add "the plurality of desired channels are non-contiguous." Thus, below I have addressed the prosecution history of the parent and then the prosecution history of the '275 patent.

7.1.1. Prosecution History of the Parent

44. The parent was filed on July 12, 2022, with original claims 1-18 and a preliminary amendment removing the original claims and adding new claims 19-38. Ex. 1005 at 2, 5-8. In a first office action issued on September 7, 2022, the examiner only examined the original claims 1-18 by mistake and provided double patenting and 35 U.S.C. 112 rejections. Ex. 1005 at 119-123. The applicant requested

examination on the new claims 19-38 on September 12, 2022. Ex. 1005 at 143-148. The examiner allowed claims 19-38 on September 28, 2022 based on the prior art not teaching "selecting, by a digital frontend (DFE) coupled to the ADC, *a plurality of desired channels* from the digitized signal and outputting by the DFE, the selected plurality of desired channels to at least one demodulator as a digital datastream." Ex. 1005 at 153-159. None of the prior art that I rely on herein (e.g., Zhang, Pandey, Zhang '933, Mirabbasi, or Dong) were even cited or considered during the prosecution of the parent.

7.1.2. Prosecution History of the '275 Patent

45. It is my understanding that U.S. Application No. 17/956,889 ("'889 application"), which issued as the '275 patent, was filed on September 30, 2022. Ex. 1004 at 44. The '889 application was filed with 18 claims including independent claims 1 and 10. Ex. 1004 at 91-95. On November 17, 2022, the applicant filed a preliminary amendment to remove the original 18 claims and to add new claims 19-38. Ex. 1004 at 110-117. The main difference from the parent's claims is that the '275 patent claims add "the plurality of desired channels are non-contiguous." *Compare* Ex. 1004 at 91-95, 113-116, 3385-3387 *with* Ex. 1001, claims 1-20. The first Office Action, issued on May 1, 2023, rejected all claims on the basis of nonstatutory double patenting over claims 1-20 of U.S. Patent No. 11,490,152. Ex. 1004 at 3352-3357. Applicant then filed a terminal disclaimer on July 25, 2023. Ex.

1004 at 3390-3393. On August 14, 2023, a Notice of Allowance was mailed that stated that the prior art failed to teach "selecting, by a digital frontend (DFE) coupled to the ADC, a plurality of desired channels from the digitized signal and outputting by the DFE, the selected plurality of desired channels to at least one demodulator as a digital datastream." Ex. 1004 at 3400-3406. This was the same statement as the reasons for allowance in the parent. *Compare* Ex. 1004 at 3405 *with* Ex. 1005 at 158.

46. Instead of paying the issue fee, Applicant filed a Request for Continued Examination (RCE) and an Information Disclosure Statement (IDS) on August 16, 2023. Ex. 1004 at 3415-3421. The IDS included, among other materials, an issued patent (U.S. Pat. No. 6,704,372) of the Zhang reference that I rely on in my analysis below. Ex. 1004 at 3418. The examiner never specifically discussed the Zhang patent in the second Notice of Allowance that was sent on August 28, 2023. Ex. 1004 at 3420, 4824-4831. Instead, in the second Notice of Allowance, the examiner seemed to dismiss the prior art that was cited in the IDS (e.g., the Zhang patent) because the examiner indicated that "[t]he prior art comprising Information Disclosure Statements filed 16 August 2023 and 18 August 2023" was "from the applicant's other patents, i.e., US 8223,775, as part of the Entropic Communications, LLC, the applicant, v. Charter communications, Inc. Civil Action and Entropic Communications, LLC v. DirectTV, LLC and Dish Network Corp., Civil Action." Ex. 1004 at 4829. Then, the examiner simply repeated the same reason for allowance

given in the previous notice of allowance and in the parent. *Compare* Ex. 1004 at 4830 *with* Ex. 1005 at 158. Specifically, the second Notice of Allowance stated that:

> The following is a statement of reasons for the indication of allowable subject matter: the prior art made of record teach a receiver for a wireless telecommunication system teach all of the adjacent frequency bands in the IF signal passed by a band pass filter in the radio frontend are converted to a digital signal by an ADC and then separated into their respective frequency bands by a channelizer where the separated frequency bands are processed in the normal manner by subsequent DSP devices, see Claxton et al. US 6,735,421. The prior art made of record do not teach selecting, by a digital frontend (DFE) coupled to the ADC, a plurality of desired channels from the digitized signal and outputting by the DFE, the selected plurality of desired channels to at least one demodulator as a digital datastream.

Ex. 1004 at 4830. The application issued as the ’275 patent on October 10, 2023. Ex. 1004 at 4857-4858.

47. It is my opinion that, if the examiner had seriously considered Zhang, the examiner should have seen that Zhang clearly describes “selecting, by a digital frontend (DFE) coupled to the ADC, a plurality of desired channels from the digitized signal and outputting by the DFE, the selected plurality of desired channels to at least one demodulator as a digital datastream,” which is what the examiner stated was missing from the prior art made of record. Ex. 1004 at 4830. I have shown how Zhang clearly describes these features in my analysis below regarding Elements [1E] and [1F], which explains how Zhang’s demodulator 230, alone or with all or part of the digital selector 240, is a digital frontend that performs the selecting and outputting steps. See Sections 9.1.1.e-f below. It also appears that none of Pandey,

Zhang ’933, Mirabbasi, or Dong was even cited or considered during prosecution of the ’275 patent. Ex. 1001, pp. 1-3.

7.2. Earliest Priority Date for the Claims

48. I understand that Application No. 17/956,889 (“the ’889 application”), which eventually became the ’275 patent, was filed on September 30, 2022. It is further my understanding that the ’889 Application claims priority to a chain of applications that claim priority to the ’526 provisional filed on April 17, 2009. It is my understanding that the ’275 patent asserts to be entitled to a priority date of the filing date of the earliest application from which the ’275 patent claims priority, *i.e.*, April 17, 2009, which is the filing date of the ’526 provisional. Thus, the earliest possible effective filing date for the claims of the ’275 patent is April 17, 2009. I understand that all of the references that I rely on in this Declaration were published or filed before April 17, 2009, and are prior art to that date.

8. OVERVIEW OF THE PRIOR ART

8.1. Cable and Satellite Television Networks

49. The origins of the cable and satellite television networks long predate the earliest claimed priority date (April 17, 2009) of the ’275 patent. Cable television networks are entertainment distribution systems that allow consumers to access and enjoy various television channels. Ex. 1033 at 22. The cable television networks include one or more headends that are designed to broadcast and distribute, via

coaxial cables, the data for the television channels as modulated radio frequency (RF) signals to multiple terminal equipment belonging to the consumers (e.g., television receivers, set-top boxes, data modems, digital video recorders, personal video recorders, and other terminal equipment). *Id*. at 22, 29-30, 40, 352; Ex. 1034 at 20-21. This is illustrated in Figure 1.1 of Ex. 1033.

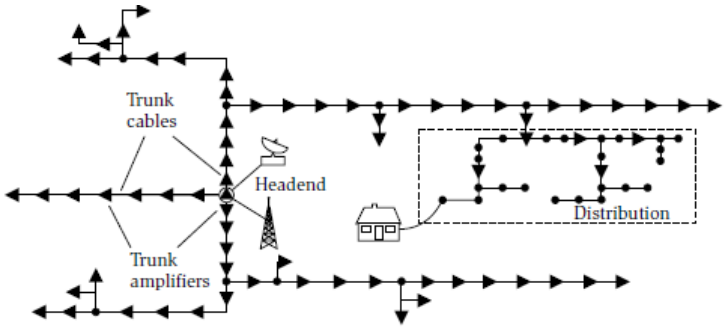

Ex. 1033, Fig. 1.1 (Excerpted) at 34

RF is the frequency range starting from 10 kHz to 100,000 MHz in the electromagnetic spectrum; signals having frequencies from this RF range are used for data transmission (wired or wireless) between devices. *See* Ex. 1015 at 9. The transmissions between the headends and the terminal equipment are governed by various well-known industry standards, including Data Over Cable Systems Interface Specification (DOCSIS). Ex. 1021 at 2-5, Fig. 1-2; Ex. 1033 at 27, 211-212.

50. Consumers can also access television channels from satellites via conventional home satellite television systems. Ex. 1035, 1:30-31; Ex. 1036, [0006]. Such home satellite television systems typically include a fixed dish antenna that

receives television channels in modulated RF signals, as well as a satellite receiver or set-top box designed to process and demodulate the modulated RF signals. Ex. 1035, 1:31-35; Ex. 1036, [0013]. Satellites may also be used to distribute the television channels to headends of cable television networks, which are then redistributed to the consumers. Ex. 1033 at 262, 280-282; Ex. 1036, [0009].

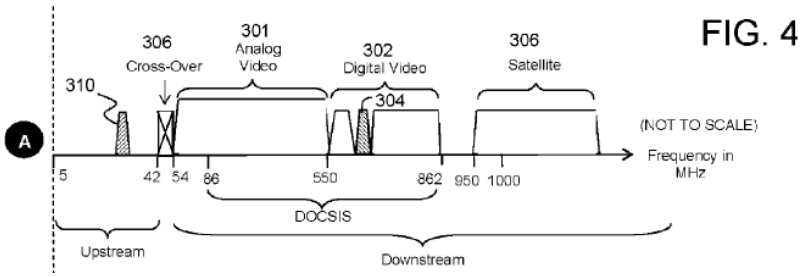

Ex. 1037, Fig. 4 (Excerpted)

51. Figure 4 of Exhibit 1037 (partially reproduced above) illustrates the RF spectrum usage of television channels from cable and satellite television networks. Ex. 1037, [0079]-[0080]. In North America, television channels from cable television networks occupy the RF spectrum from 54 to 864 MHz, with digital channels occupying the RF spectrum above 550 MHz. Ex. 1033 at 413, 503; Ex. 1037, [0079]-[0080]. In 1941, the National Television System Committee, established by the United States Federal Communications Commission, set a standard that each television channel should be allocated 6 MHz of RF bandwidth and that the set of allocated television channels should occupy the RF spectrum in a contiguous manner. Ex. 1021 at 1, 23-24; Ex. 1033 at 45, 413, 515-520.

52. Television channels from satellite networks occupy various bands in frequencies greater than 950 MHz. Ex. 1035, 1:37-48; Ex. 1037, [0079]-[0080]. Signals in satellite bands are sent to a satellite receiver or set-top box, with the satellite bands carrying multiple transponder channels and each transponder channel carrying a number of different television channels. Ex. 1035, 1:37-48.

8.2. Modulated RF Signals

53. Modulation is a method where an RF carrier signal is varied (e.g., in amplitude, frequency, and/or phase) with information to be transmitted. Ex. 1033 at 155. The information to be transmitted can be digital data comprising of bits "1" and "0," such as the digital data of television channels for transmission from headends of cable television networks or subscriber locations. *Id*. One of the main goals of modulation is to squeeze as much data into the allocated RF bandwidth as possible, and that objective, known as spectral efficiency, measures how quickly data can be transmitted in an assigned RF bandwidth. *Id.* at 156. The unit of measurement of spectral efficiency is bits per second per Hz (b/s/Hz). *Id.* As I discuss below, multiple modulation techniques facilitating high spectral efficiencies were known to a POSITA by the earliest claimed priority date of the '275 patent.

8.2.1. Biphase Shift Keying

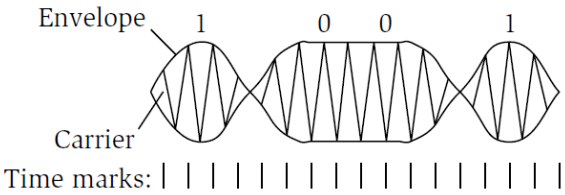

Ex. 1033, Fig. 4.3 (Excerpted) (page 161)

54. Biphase shift keying (BPSK) is a simple form of modulation that can be used in digital cable and satellite television networks, where the phase of an RF signal is shifted 180° in phase between transmission of bit "0" and bit "1." Ex. 1033 at 160-161, Fig. 4.3 (partially reproduced above). The spectral efficiency of BPSK modulation is 1 bit/s/Hz. *Id.* at 156.

8.2.2. Quadrature Phase Shift Keying (QPSK)

55. In Quadrature Phase Shift Keying (also called 4-Quadrature Amplitude Modulation (4-QAM)), digital data is split into two components, an I (in-phase) component and a Q (quadrature) component. Ex. 1033 at 163-164, Fig. 4.4 (reproduced below). The same RF carrier signal is used for each component, but the phases of the two signals in the two components are 90° apart or in quadrature. *Id.* Signals in quadrature are orthogonal and do not interfere with one another. *Id.* Quadrature modulation takes advantage of this principal by combining two signals in quadrature for a combined output signal. *Id.* In quadrature modulation, digital data are broken into a discrete number of symbols, which are used to convey information. *Id.* at 164-165. These symbols are mapped to a discrete set of magnitude and phase

values on an I/Q constellation, which are referred to as constellation points. *Id.* For example, in BPSK, each symbol can only represent a bit "0" or a bit "1" because the constellation of BPSK modulation has just two possible constellation points representing two possible states, or symbols, where each symbol represents a single bit of information. The constellation of QPSK modulation has four constellation points representing four different states, or symbols: state 1 (bits "00"), state 2 (bits "01"), state 3 (bits "10"), and state 4 (bits "11"). *Id.* QPSK can, therefore, transmit 2 bits per symbol. *Id.* The RF carrier signals in each of the I and Q components are encoded with one of the two bits of the symbol. *Id.* at 163. Therefore, QPSK can transmit twice as much data using the same amount of bandwidth as BPSK, or it could transmit the same amount of data using half the bandwidth. *Id.* at 156.

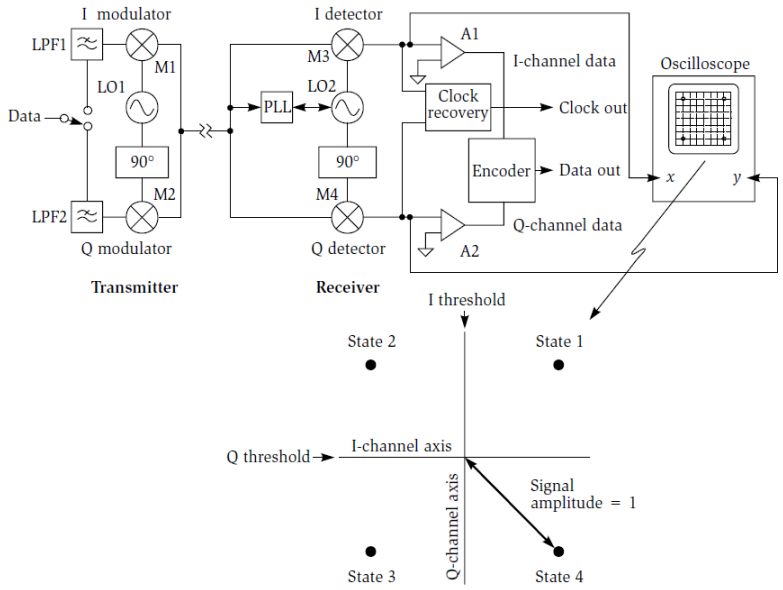

Ex. 1033, Fig. 4.4 (page 164)

56. After the two RF carrier signals from the two components I and Q are modulated, the RF carrier signals are combined for transmission to the receiver. Ex. 1033 at 163. At the receiver, the received combined signal is split back into the I-component and the Q-component by two mixers, M3 and M4. *Id.* The separation back into I/Q components allows the encoder inside the receiver to map the two components onto the QPSK I/Q constellation and interpret which of the four possible symbols are encoded in the components. *Id.* at 164.

57. A POSITA would have been well aware that satellite television networks primarily used QPSK modulation. Ex. 1033 at 280; Ex. 1036, [0071], [0075]. Satellite transponders that transmit RF signals to headends and dish antennas are simply a frequency translator and a power amplifier, and for the sake of efficiency, it was preferred to use modulation formats that do not depend on amplitude changes to communicate information. Ex. 1033 at 280. QPSK modulation met this requirement of satellite transponders. *Id*.

8.2.3. 16-Quadrature Amplitude Modulation (QAM), 64-QAM, and 256-QAM

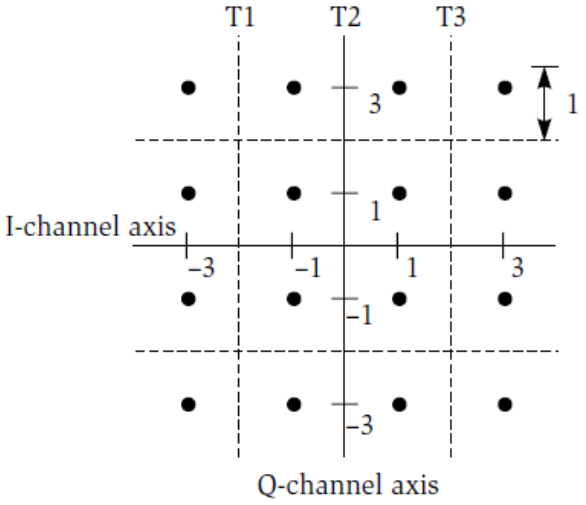

Ex. 1033, Fig. 4.5 (Partial Excerpt) (page 167)

58. Modulation schemes with greater numbers of constellation points are able to transmit more information per symbol. Ex. 1033 at 166-169. The next denser known modulation format after QPSK was 16-QAM, where data is split into I and Q components and carried by two RF signals in quadrature. *Id.* at 166. However, the 16-QAM I/Q constellation has sixteen different states (as illustrated by the sixteen dots in Figure 4.5 of Ex. 1033, partially reproduced above), where each state is a symbol that contains one of 16 different combinations of amplitude and phase levels. *Id.* Each symbol contains up to 4 bits and, therefore, can represent values from "0000" to "1111." *Id.* The spectral efficiency of 16-QAM is 4 bit/s/Hz. *Id*. at 168, Fig. 4.6.

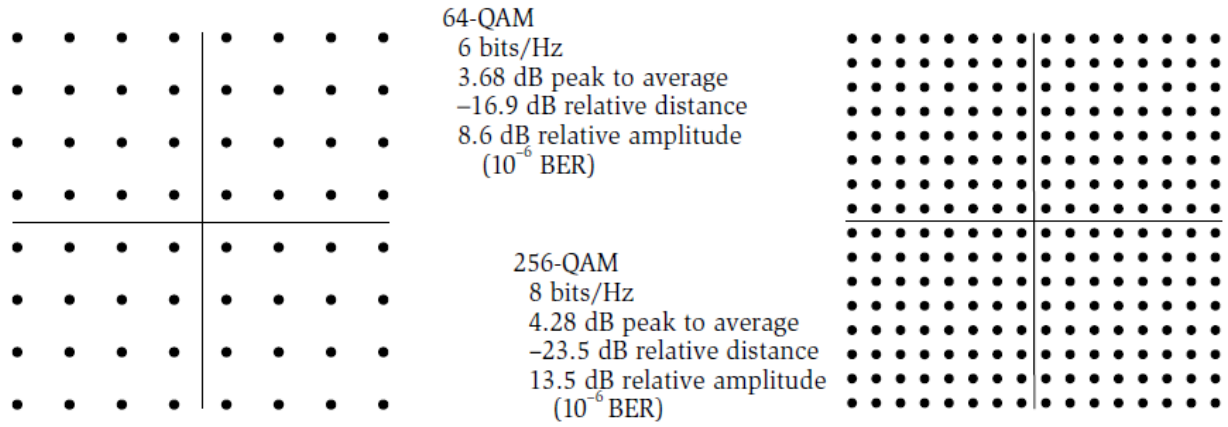

Ex. 1033, Fig. 4.6 (Partial Excerpt) (page 168)

59. Similarly, the I/Q constellation of 64-QAM (illustrated by Figure 4.6 of Ex. 1033, partially reproduced above) has sixty-four different states, where each state is a symbol that contains one of 64 different combinations of amplitude and phase levels. *Id*. Each symbol contains up to 6 bits (representing values from "000000" to "111111"), and the spectral efficiency of 64-QAM is 6 bit/s/Hz. *Id.* The I/Q constellation of 256-QAM has 256 different states, where each state is a symbol that contains one of 256 different combinations of amplitude and phase levels. *Id.* Each symbol contains up to 8 bits (representing values from "00000000" to "11111111"), and the spectral efficiency of 256-QAM is 8 bit/s/Hz. *Id.*

60. DOCSIS (finalized in 1997), DOCSIS 1.1 (finalized in 2001), and DOCSIS 2.0 (finalized in 2002) mandate the use of either 64-QAM or 256-QAM for downstream data transmission from headends to consumers' terminal equipment. Ex. 1033 at 168, 213-214. Therefore, a POSITA would have known that terminal equipment receiving signals from headends of cable television networks were

required to demodulate signals that have been modulated using 64-QAM or 256-QAM. Moreover, a POSITA would have understood the relative benefits of using 64-QAM or 256-QAM versus BPSK, as 64-QAM and 256-QAM offer higher rates of spectral efficiencies than BPSK. *Id.* at 156.

8.3. Radio Receivers or Tuners for Cable and Satellite Television Networks

61. As discussed in Section 8.1, it was well-known to a POSITA that consumer terminal equipment (e.g., television receivers, cable set-top boxes, satellite set-top boxes, digital video recorders, personal video recorders, and other terminal equipment) receive modulated RF signals from headends and satellites. Ex. 1033 at 22, 30, 40, 352; Ex. 1035, 1:30-35; Ex. 1036, [0006]. A POSITA was also aware that consumer terminal equipment included a radio receiver (also known as a tuner) that received the RF signals and processed them in such a way that a demodulator could demodulate the RF signals to recover the digital data encoded in the RF signals. Ex. 1033 at 408-411, Fig. 22.1; Ex. 1035, 1:35-37, 1:49-52; Ex. 1036, [0018], [0020]-[0021].

62. Cable television RF receivers concurrently receive RF signals for multiple digital television channels allocated in the RF frequency spectrum of 550 to 864 MHz. Ex. 1033 at 413, 503; Ex. 1037, [0079]-[0080], Fig. 4. Satellite RF receivers concurrently receive RF signals for multiple television channels allocated

in the RF frequency spectrum above 950 MHz. Ex. 1035, 1:37-47; Ex. 1037, [0080]. Furthermore, the POSITA was aware that cable and satellite television radio receivers could tune (i.e., select and extract) signals for certain desired television channels (e.g., channels selected for viewing by a consumer) from the received RF frequency spectrum. Ex. 1033 at 299; Ex. 1036, [0020]-[0021]; Ex. 1042, 4:10-36; Ex. 1044, 1:51-58.

63. One type of receiver is known as an IF (intermediate frequency) receiver, and in particular, a type of receiver known as a low-IF receiver. By the earliest claimed priority date of the ’275 patent, IF receivers, including low-IF receivers, were well-known in wireless communication systems for their high performance and low power consumption. Ex. 1025 at 270, 272; Ex. 1034 at 17, 65-74. It was also known to a POSITA, by the earliest claimed priority date of the ’275 patent, that low-IF receivers were conventionally used for receiving RF signals from cable television networks and satellite television networks. Ex. 1035, 1:49-61; Ex. 1038, [0022]-[0023], [0029]-[0030], [0042].

64. IF receivers have been used for a long time, and their way of operating is very well known. Ex. 1025 at 270. In general, IF receivers operate by initially downconverting RF signals, which may comprise multiple RF sub-bands each carrying one or more separate signals, from its RF carrier frequency to an intermediate frequency (IF). *Id*. The downconverted signals can be demodulated at

the IF or further downconverted to baseband before being demodulated. *Id*. at 270, 279. When a band of signals is at baseband, the low end of the band is near zero frequency in the frequency spectrum or includes zero frequency. Ex. 1015 at 4. Intermediate frequency falls below the frequency of the RF signals but above the baseband frequency. Ex. 1034 at 22. Low-IF receivers initially downconvert to an IF that is at a relatively low frequency, such as a few hundred kilohertz. Ex. 1025. at 269.

8.3.1. Architecture of Low-IF receivers

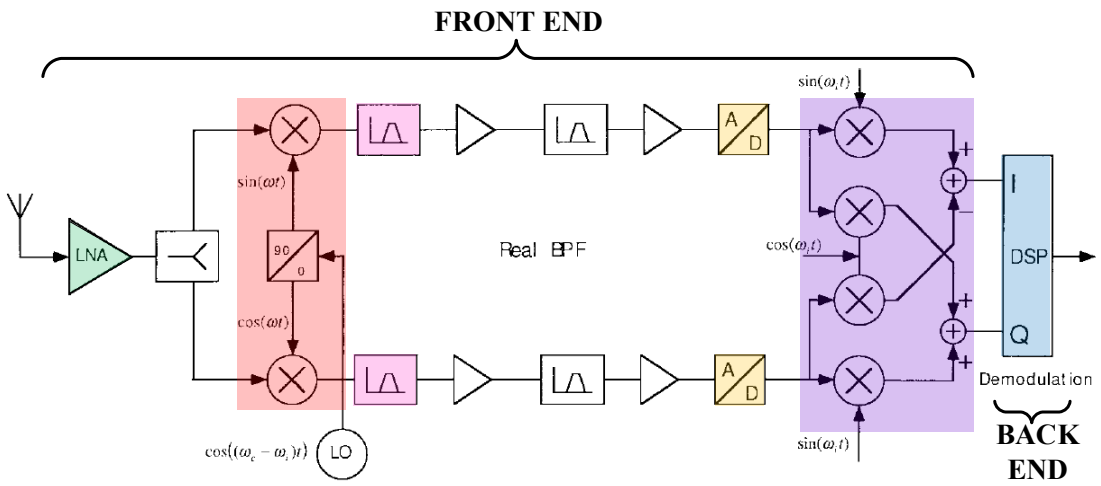

Ex. 1025, Fig. 22(a) (annotated)

65. Low-IF receivers (illustrated by Figure 22(a) of Ex. 1025, reproduced and annotated above) comprise two main portions: a front end that performs frequency downconversion of the RF signals, and a back end including a digital signal processor (DSP) that performs the actual demodulation of the RF signals. Ex. 1034 at 22-23. The demodulation technique that will be used in the DSP depends on

the modulation technique used to modulate the incoming RF signals, and therefore, if the incoming RF signals are modulated using QPSK or QAM techniques (which modulate I and Q components), then demodulation is typically performed to extract the I and Q components of the incoming RF signals. *Id.* at 23. DSPs typically perform demodulation on baseband signals. *Id.*; Ex. 1039 at 11; Ex. 1025 at 269, 279. However, the received RF signals are at much higher (non-baseband) frequencies. *Id.* Therefore, the front end must produce baseband quadrature I and Q components of the incoming RF signals to be usable by the DSP. Ex. 1034 at 23.

66. Still referring to Figure 22(a) of Ex. 1025 (reproduced and annotated above), in the front end of a low-IF receiver, the incoming RF signals are first amplified by a front-end low noise amplifier (LNA) (**green**) to provide enough gain to boost the received RF signal levels to an acceptable level such that further signal processing can be performed on the received RF signals; the LNA compensates for the attenuations of the RF signals during the transmission of the RF signals from another device. Ex. 1034 at 41; Ex. 1039 at 16. The RF signals are downconverted to baseband signals in two steps, where the first step (**red**) converts the RF signals to Intermediate Frequency (IF) signals before one or more analog-to-digital converters (ADCs) (**gold**) convert IF signals to digital signals, and the second step (**purple**) converts the digital signals of IF to baseband signals. Ex. 1025 at 270, 272; Ex. 1034 at 23.

67. In the first downconversion step, from RF to IF, the incoming RF signals are split and then down-converted by a quadrature downconverter (**red**), also referred to as a complex mixer or complex multiplier, which comprises two real mixers to produce I and Q components of the signals in IF. Ex. 1034 at 65-72; Ex. 1039 at 11 ("Two mixers are needed to retain both the amplitude and phase of the original modulated signal: one for the in-phase (I) and another for a quadrature (Q) baseband output."); Ex. 1018 at 5-6 (original pages 133-134). For example, as explained in an article by Shahriar Mirabbasi and Ken Martin in IEEE Communications Magazine in November 2000:

> The realization of a multiplier for mixing a real signal with a complex exponential *requires two real multipliers*, as illustrated in Fig. 2. *The real and imaginary parts of the mixer output are called the in-phase (I) and quadrature (Q) components* of the downconverted signal (since cosine and sine are in quadrature). In Fig. 2 the frequency of the complex exponential is chosen to be the same as the center frequency of the passband signal, for comparison with case 2 in Fig. 1. In this case there is no image problem associated with the *complex mixer*.

Ex. 1018 at 6 (emphasis added).

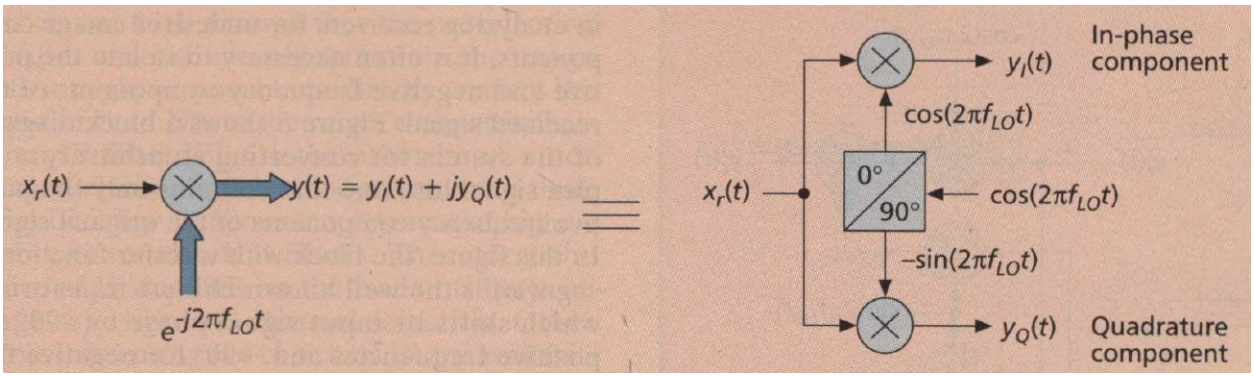

Ex. 1018, Fig. 2

The term "mixer" and "multiplier" are often used interchangeably to refer to an analog or digital electrical circuit (represented by the symbol ⊗) that multiples a modulated input signal (e.g., an RF signal) at frequency f_1 and a reference signal (e.g., from a local oscillator LO) at frequency f_2, which produces new signals at the sum and difference of the input frequencies, f_1+f_2 and f_1-f_2. Ex. 1039 at 12-13. This is illustrated in Figure 8-9 from Ex. 1039.

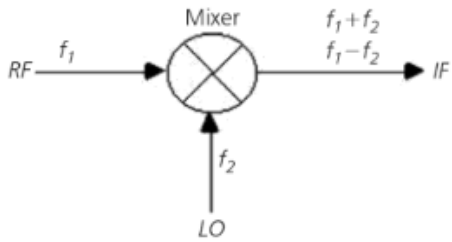

Ex. 1039, Fig. 8-9

By filtering out the signal with the sum (f_1+f_2), and passing only the signal with difference (f_1-f_2), the center frequency of the modulated input signal is reduced, or down-converted. A mixer/multiplier is "complex," if it multiplies the input signal by a complex signal, having real and imaginary parts, to produce in-phase and

quadrature signals. Ex. 1018 at 5. A complex mixer/multiplier can include two real mixers/multipliers when the input signal is real and the reference signal is complex as shown in Figure 22(a) of Ex. 1025 above, or it can include four real mixers/multipliers if both the input signal and reference signal are complex as shown below. Ex. 1018 at 5-6, Fig. 3. As shown in the figure below, the symbol ⊗ is used interchangeably to refer to a complex mixer (left) or individual real multiplier/mixers (right) that make up a complex mixer.

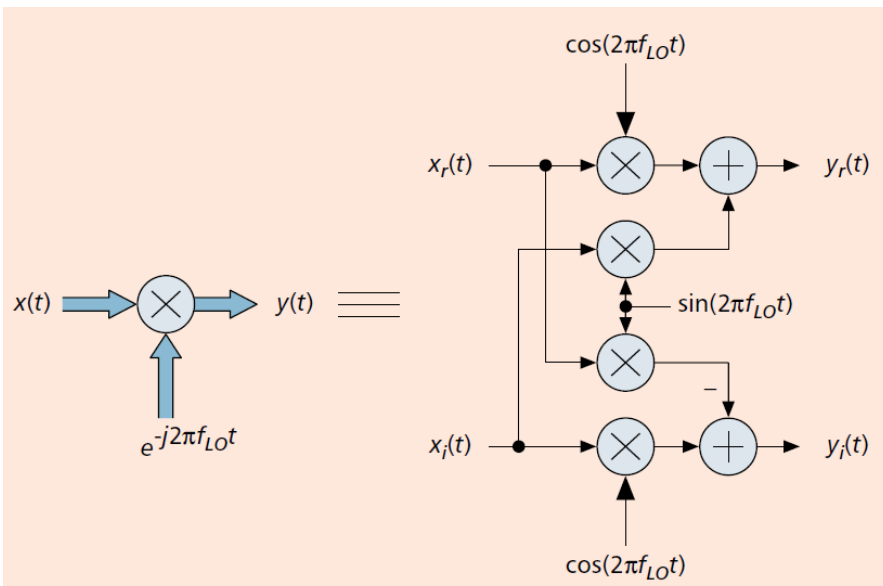

Ex. 1018, Fig. 3

Referring back to Figure 22(a) of Ex. 1025, the RF signals could also be downconverted using a single mixer and a sinusoidal signal (as shown by Figure 2.6 of Ex. 1034, reproduced below); however, the main disadvantage of mixing an RF signal of frequency fc with just a single sinusoidal signal cos(2πfit) to downconvert

to intermediate frequency f_i is that a second mirror signal of frequency f_c+2f_i is also downconverted to frequency f_i. Ex. 1034 at 24.

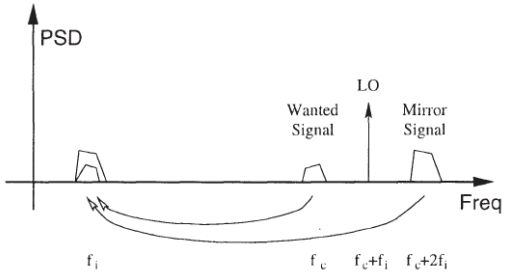

Ex. 1034, Fig. 2.6

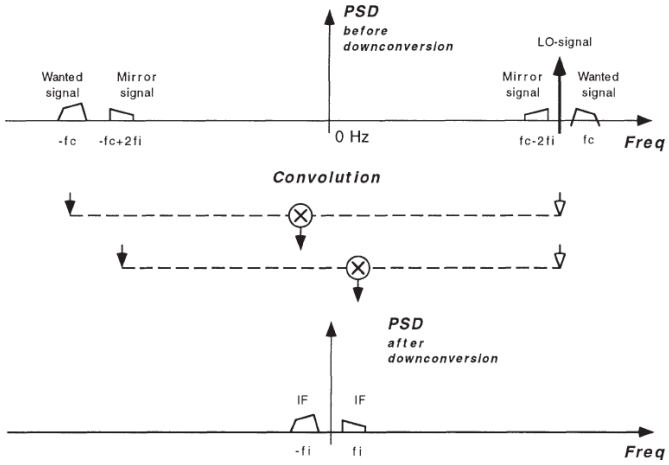

Ex. 1034, Fig. 3.23

68. It was known that the mirror signal problem could be avoided by mixing the incoming RF signals with a complex signal, $\cos(2\pi f_i t) + j\sin(2\pi f_i t)$. Ex. 1034 at 28, 43; Ex. 1039 at 13. Mixing with such complex signals shifts a wanted RF signal at frequency f_c to frequency f_{-i} while the unwanted mirror (or image) frequency signal at f_c+2f_i is shifted to frequency f_i. *Id*. Furthermore, separately mixing the RF signals with the signal $\sin(2\pi f_i t)$ produces the I-components of the RF signals, while mixing with $\cos(2\pi f_i t)$ produces the Q-components for the RF signals, and both of these components are needed for the DSP at the back end to ultimately demodulate the incoming RF signals. Ex. 1034 at 23. Filters can be used after the first stage of downconversion to filter out unwanted mirror signals. *Id*. at 28; Ex. 1039 at 17.

69. One could directly downconvert the incoming RF signal to baseband in the analog part of the RF receivers by using quadrature downconverters such that a second downconversion stage is not needed before the signals are forwarded to a demodulator; for example, zero-IF receivers perform such direct conversion. Ex. 1034 at 28; Ex. 1050 at 13-14. However, a significant problem in direct downconversion is the introduction of parasitic baseband signals at baseband, known as DC-offset, in the output of the quadrature downconverters. Ex. 1018 at 8; Ex. 1034 at 29; Ex. 1050 at 14-15. This DC-offset is mainly the result of the crosstalk between the incoming RF signals and the complex signal of the quadrature downconverters, the self-mixing phenomenon of the local oscillator producing the complex signal, the leakage of the complex signals to the input of the LNA, and/or capacitive/inductive bondings between the different components of the RF receivers. Ex. 1018 at 8; Ex. 1034 at 29, 55-62; Ex. 1050 at 14-15. Such DC-offset issues are not present in low-IF receivers as the output of the first stage of mixing is at IF and not at baseband, and the downconversion at the second step is digitally performed. Ex. 1018 at 9-10; Ex. 1034 at 18. Furthermore, in the analog part of the RF receivers, mismatches between the two components of the complex signal and differences along the two branches of quadrature mixers and any following amplifiers and filters can cause the corruption of the I/Q components of the downconverted signals. Ex.

1018 at 10; Ex. 1034 at 29, 42, 55. However, such mismatches are not an issue in the second digital downconversion step. Ex. 1018 at 9; Ex. 1034 at 74, 76.

70. Analog-to-digital converters (ADCs) were commonly used in RF receivers for either IF or baseband signal sampling. Ex. 1039 at 18. Therefore, referring again to Figure 22(a) of Ex. 1025 (reproduced and annotated above), the quadrature downconverter (**red**) downconverts the incoming RF signals to produce I and Q components in IF before two ADCs (**gold**) separately digitize the IF I and Q components. Ex. 1034 at 42. The digitized I and Q components are further downconverted to baseband by a digital complex mixer (**purple**) (comprising four digital mixers represented by the symbol ⊗ and two summers) before being forwarded to the DSP (**blue**).

8.3.2. Channel Selection based on Digital Filters

71. RF receivers receive RF signals for multiple television channels from cable and satellite television networks. Ex. 1035, 1:37-47. An important function for RF receivers is the ability to tune or filter out the signals for a desired television channel from the received RF signals such that only the signals of the desired television channels are demodulated. Ex. 1033 at 510. A POSITA would have known that digital filters based on digital signal processing are far superior to analog filters as digital filters do not suffer from manufacturing variations or aging, are easily programmable and tunable, have low power consumption, are unaffected by

environmental influences, and have a superior performance-to-cost ratio. Ex. 1041 at 43. Digital filters, such as low pass filters and band pass filters, were known to select signals of desired television channels in RF receivers. Ex. 1035, 11:13-23, Fig. 7A; Ex. 1042, 6:5-8, Fig. 1B; Ex. 1043, 5:13-29, 5:46-53; Ex. 1050 at 44, 48.

- Low pass filter: A low-pass filter is a filter that passes signals with a frequency lower than a selected cutoff frequency (ω_c) and attenuates signals with frequencies higher than the cutoff frequency. Ex. 1041 at 14.

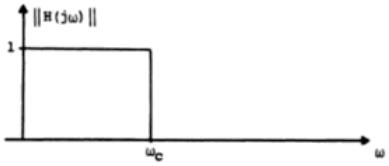

Fig. 1.23. Ideal LP filter magnitude frequency response.

Ex. 1041, Fig. 1.23

- Bandpass filter: A bandpass filter allows a specific range of frequencies (ω_1 to ω_2) to pass through while attenuating frequencies outside that range. Ex. 1041 at 21.

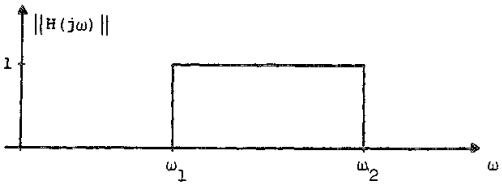

Fig. 1.27. Ideal BP filter.

Ex. 1041, Fig. 1.27

A bandpass filter allows signals within a selected frequency range (e.g., signals for a selected television channel) to be isolated from undesired signals from outside the range. Ex. 1043, 5:13-15; Ex. 1050 at 44. Signals for a desired television channel can also be isolated from signals of undesired television channels by downconverting all the signals such that the signals for the desired television frequency are placed at baseband and then applying a low pass filter function to isolate the signals of the desired television channel. Ex. 1043, 5:46-50; Ex. 1050 at 48. However, low pass filters are preferred over bandpass filters as low pass filters require fewer computational steps and, therefore, less computational power than bandpass filters. Ex. 1050 at 33, 48-49. It was also known to a POSITA that low pass filters and bandpass filters use well-known digital architectures of Finite Impulse Response (FIR) filters. Ex. 1041 at 24-63; Ex. 1043, 5:15-17; Ex. 1050 at 44.

72. Some receivers may allow signals of two or more desired channels to be filtered out such that consumers may enjoy a feature called picture-in-picture, where a small window showing one of the desired television channels is inserted into a larger window showing another one of the desired television channels. Ex. 1033 at 467; Ex. 1035, 4:37-43. For example, Khoini-Poorfard (Ex. 1035) describes using two RF receivers to filter and demodulate two television channels such that the filtered television channels can be used in the picture-in-picture feature. Ex. 1035, 4:37-43, 11:13-23, Fig. 7A.

8.3.3. Stacking of Desired Channels before Demodulation

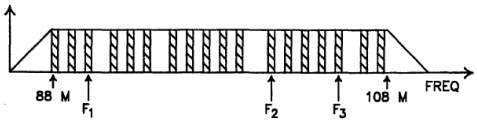

Ex. 1044, Fig. 1

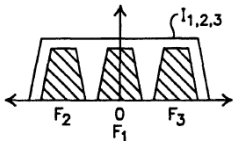

Ex. 1044, Fig. 6

73. Khoini-Poorfard (Ex. 1035) describes using two RF receivers that individually filter and demodulate two television channels. Ex. 1035, 4:37-43, 11:13-23, Fig. 7A. Kelley (Ex. 1044) describes an RF receiver that demodulates multiple desired channel bands without expensive hardware requirements and hardware duplications. Ex. 1044, 2:42-50. The RF receiver in Kelley digitizes RF signals comprising multiple desired RF bands in an RF spectrum (e.g., bands F_1, F_2, and F_3 in Figure 1 of Ex. 1044 reproduced above) and subjects the digitized signals to multiple frequency translations such that the desired bands are adjacent to each other (e.g., bands F_1, F_2, and F_3 are adjacent to each other in Figure 6 of Ex. 1044 reproduced above). *Id*., 2:51-58, 4:38-40, 4:54-5:9. The desired frequency bands are then digitally separated, demodulated and processed to provide multiple outputs from the single receiver. *Id*. at 2:58-60.

8.3.4. Decimation

74. ADCs in RF receivers convert incoming RF signals to digital signals by sampling the RF signals at a rate that is at least twice the highest frequency of the RF signals. Ex. 1045 at 70. The reason for the high sampling rate is to prevent

information loss during digitization; the Nyquist theorem specifies that a sinusoidal function in time or distance can be regenerated with no loss of information as long as it is sampled at a frequency greater than or equal to twice per cycle. *Id.*; Ex. 1033 at 98. That is, if you digitize an analog signal by sampling the signal at two or more times the highest frequency contained in the signal, that signal can be theoretically converted back to the exact same analog signal by passing the signal through a low pass filter. The Nyquist theorem is a fundamental principle that enables us to digital signal process (DSP) analog signals (radio waves, sound waves, vibrations, etc.) that exist in the real world. Ex. 1033 at 98-101. Because the sample rate of the resulting signal from an ADC may be too high for subsequent DSP processing, decimation is typically performed on the sampled signals at baseband to lower the sampling rate. Ex. 1034 at 104; Ex. 1045 at 70. Decimation is a well-known process that reduces the original sample rate of a signal to a lower rate. Ex. 1045 at 14-15. A decimation filter can be implemented in a digital signal processing block of an RF receiver after the second downconverting step. Ex. 1034 at 104; Ex. 1045, Fig. 3.57; Ex. 1046, 2:51-57.

8.3.5. Demodulation of Multiple Channels

75. A POSITA would have been well aware that either a single demodulator or multiple demodulators can perform demodulation of signals for multiple selected television channels. Ex. 1019, 1:67-2:7, 2:32-35, 2:61-63, 3:50-52; Ex. 1044,

7:53:57. For example, Carson (Ex. 1019) describes a multichannel time-shared demodulator that demodulates the signals of multiple channels concurrently using time division multiple access (TDMA) techniques. Ex. 1019, 1:67-2:7, 2:32-35, 2:61-63, 3:50-52. Another example is shown in Azenkot (Ex. 1075), which describes a single shared demodulator for demodulating multiple time-division multiplexed QAM channels in a cable modem termination system (CMTS) in a hybrid fiber-cable (HFC) network. Ex. 1075, Abstract, 1:6-14, 6:14-22, 6:30-37; 7:15-20, 32:53-33:14. As another example, Shadwell (Ex. 1076) discloses the system shown below, which receives multiple digitized downconverted channels (**green**), which are time-multiplexed together (**purple**) into a data stream (**orange**) that is output to a single demodulator (**brown**), which then provides a demodulated time-multiplexed output (**light blue**).

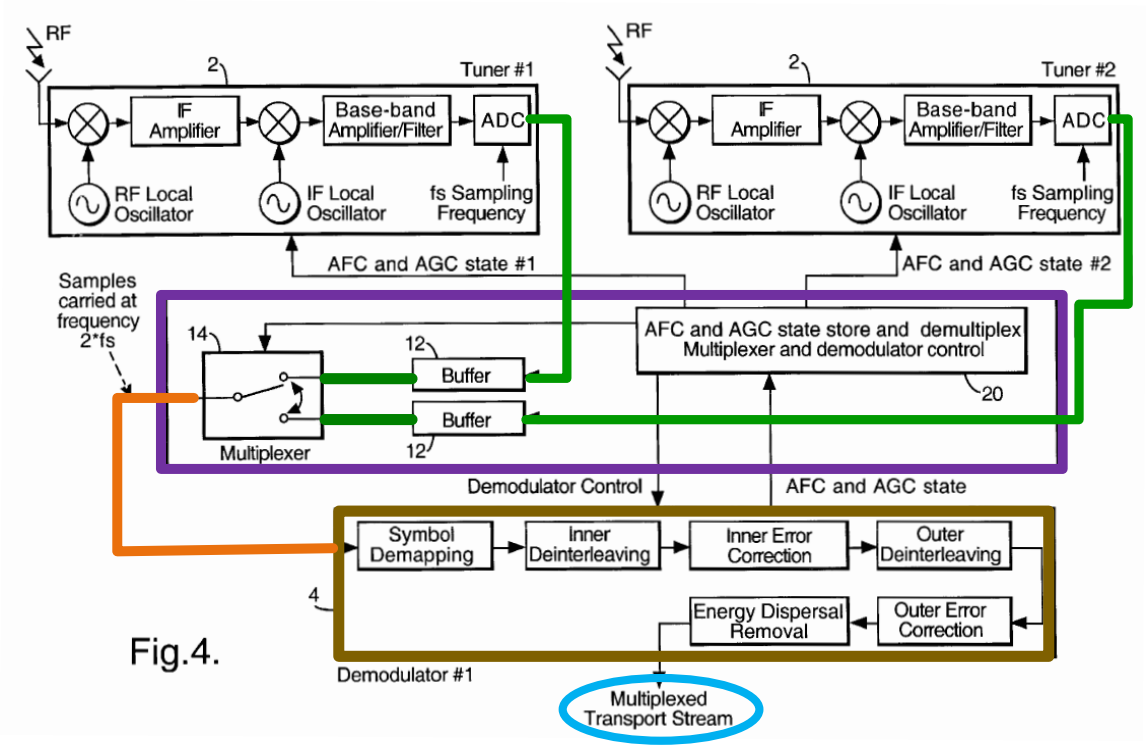

Ex. 1076, Fig. 4 (annotated).

A POSITA would have been well aware that single demodulator at the time, such as those disclosed in Carson, Azenkot, and Shadwell, or as disclosed in Zhang as further discussed below, were capable of demodulating multiple selected channels. Ex. 1076, Abstract, 2:28-52, 3:6-17, 4:21-32, 6:19-37, Figs. 1a, 1b, 2, 4. The use of a single demodulator would reduce cost of the system, and enable certain functionality, such as providing a transport stream including two demodulated television channels, for example, for decoding a picture-in-picture stream. Ex. 1076, 2:13-26, 2:53-59.

8.4. Serial vs. Parallel Data Communication

76. As described throughout subsection 8.3.1 above, the different components of an IF receiver, including a low-IF receiver, were known to a POSITA prior to the ’275 patent. It was also known to the POSITA by the earliest claimed priority date (April 17, 2009) of the ’275 patent that the different components of low-IF receivers, such as the front end and the back end, could be fabricated on the same chipset or as different chipsets, and different types of buses could later connect the chipsets. Ex. 1034 at 23, 183; Ex. 1048 at 16. Data buses were known to pass data between electronic components. Ex. 1048 at 16. The data could be either passed in a serial manner by passing one bit at a time in a single bus, or in a parallel manner where several bits are transmitted simultaneously and each along its own separate channel. *Id.*; Ex. 1049, 1:10-28.

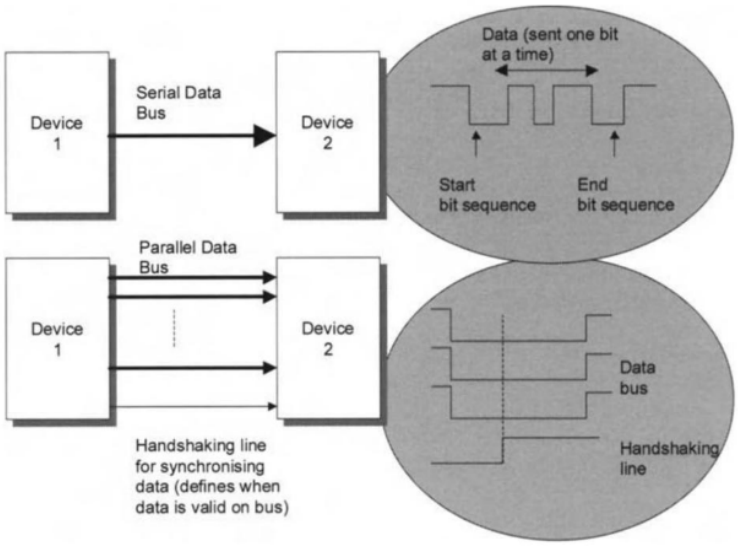

Ex. 1048, Fig. 2.3 (page 17)

77. A POSITA would have known that data transmission using parallel data buses offers a much higher data transmission rate than data transmission using a serial data bus. Ex. 1048 at 16. However, the parallel bus structure requires a larger number of conductors and more space on the chip. Ex. 1049, 1:32-40. Furthermore, due to natural aberrations in the structure of each bus (e.g., resistance), signals in parallel data buses do not arrive at the same time, creating a problem known as "skew." *Id.* at 1:24-40. This problem becomes more severe as the distances between chipsets increase. *Id*.

78. Therefore, it was well known before the claimed priority date of the '275 patent to use technologies such as those described above in Sections 8.2-8.3 to broadcast data for television channels using QPSK and QAM modulated RF signals, and to use radio frequency receivers and tuners, such as low-IF receivers, to receive and process the RF signals to select one or more desired television channels. As also discussed above, such processing was well-known to include channel stacking, downconversion, channel selection (e.g., filtering), demodulation, and decimation, as well as parallel and serial bussing between receiver components.

8.5. U.S. Publication No. 2003/0056221 – Zhang (Ex. 1013)

79. U.S. Publication No. 2003/0056221 ("Zhang") (Ex. 1013) is a U.S. Published Application published on March 20, 2003, and thus, I understand that Zhang is prior art under pre-AIA 35 U.S.C. 102(b). Ex. 1013, cover. As discussed

in the prosecution history section 7.1.2 above, it seems that Zhang was not considered during the prosecution of the ’275 patent. Ex. 1001, cover.

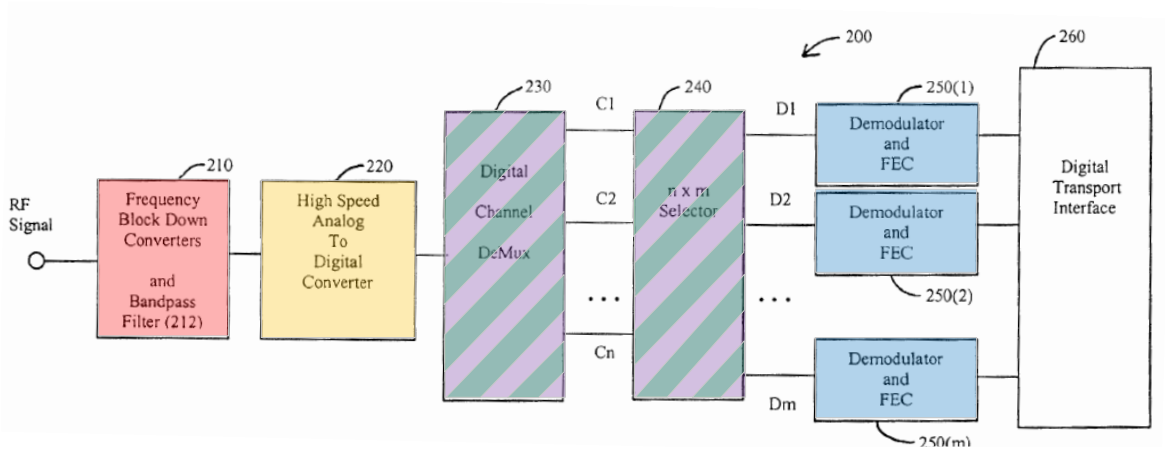

Ex. 1013, Fig. 2 (annotated)

80. Zhang describes a multi-channel demodulator circuit 200 (illustrated by Figure 2 of Zhang reproduced above) that can be used as “advanced wide-band front-ends for digital set-top boxes, PVRs, home gateways and home media centers.” Ex. 1013, [0044]-[0045], Fig. 8. The multi-channel demodulator circuit 200 receives a band of analog Radio Frequency (RF) signals comprising multiple content channels and only demodulates signals for those content channels that a subscriber has selected. Ex. 1013, [0011], [0024], [0028]-[0029], [0038]-[0040], [0042]. The Zhang multi-channel demodulator circuit comprises a frequency block down-converter 210 (**red**) that receives the band of analog RF signals and shifts the band to a lower frequency such that an analog-to-digital converter (**gold**) can better process the signal to convert the analog RF signals to digital RF signals. Ex. 1013, [0010], [0023], [0025], [0027], [0030]-[0037], [0041]-[0042]. A digital channel

demultiplexer 230 (**green**/**purple**) then separates signals of all the content channels in the digital RF signals (e.g., channels C_1 to C_n), while a nxm digital selector 240 selects and forwards only signals for a subset of content channels selected by a subscriber (e.g., channels D_1 to D_m) to one or more of demodulators 250(1), 250(2), . . . 250(m) (**blue**), which may be "shared demodulators" with common functional blocks. Ex. 1013, [0010]-[0011], [0028]-[0029], [0042], [0047], claims 1, 4, 9, 31-32. The demodulators 250(1), 250(2), . . . 250(m) receive the signals of selected content channels and demodulate the signals and output to a digital transport interface to eventually recover audio and video data of the selected content channels. Ex. 1013, [0007].

81. Figure 3 shows additional details of the digital channel demultiplexer 230, which may include a bank of numeric control oscillators 310(1...n), complex multipliers 320(1... n) (**green**), and low-pass filters (LPFs) 330(1 . . . n) (**purple**). Ex. 1013, [0030]. The complex multipliers 320(1... n) multiply the digital RF signals with select frequencies provided by the numeric control oscillators 310(1...n), and shift the frequencies of the digital RF signals to be near baseband frequencies. Ex. 1013, [0032]. The low-pass filters (LPFs) 330(1 . . . n) enable "filtering [of] undesired RF channels and passing only the target RF channel." Ex. 1013, [0032], claim 37.

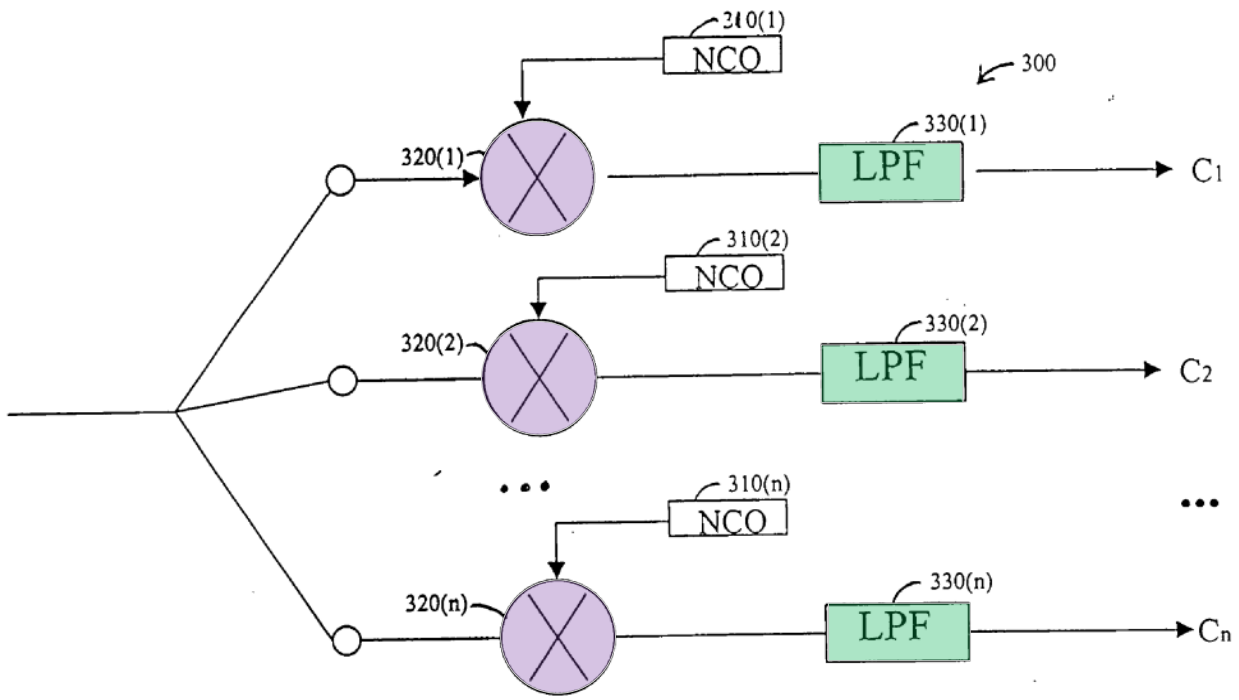

Ex. 1013, Fig. 3 (annotated)

As I show below and discuss in the following sections, Zhang discloses the same claimed system as in the '275 patent. This includes a "radio front end" (**red**) (Element [1C]/[11C]), an "analog-to-digital converter (ADC)" (**gold**) (Element [1D]/[11D]), and "digital frontend (DFE)" (**purple**/**green**) (Element [1E]/[11E]). Zhang's system also includes a digital selector 240 (**orange**) that provides serial and parallel interfaces (claims 2/12, 3/13).

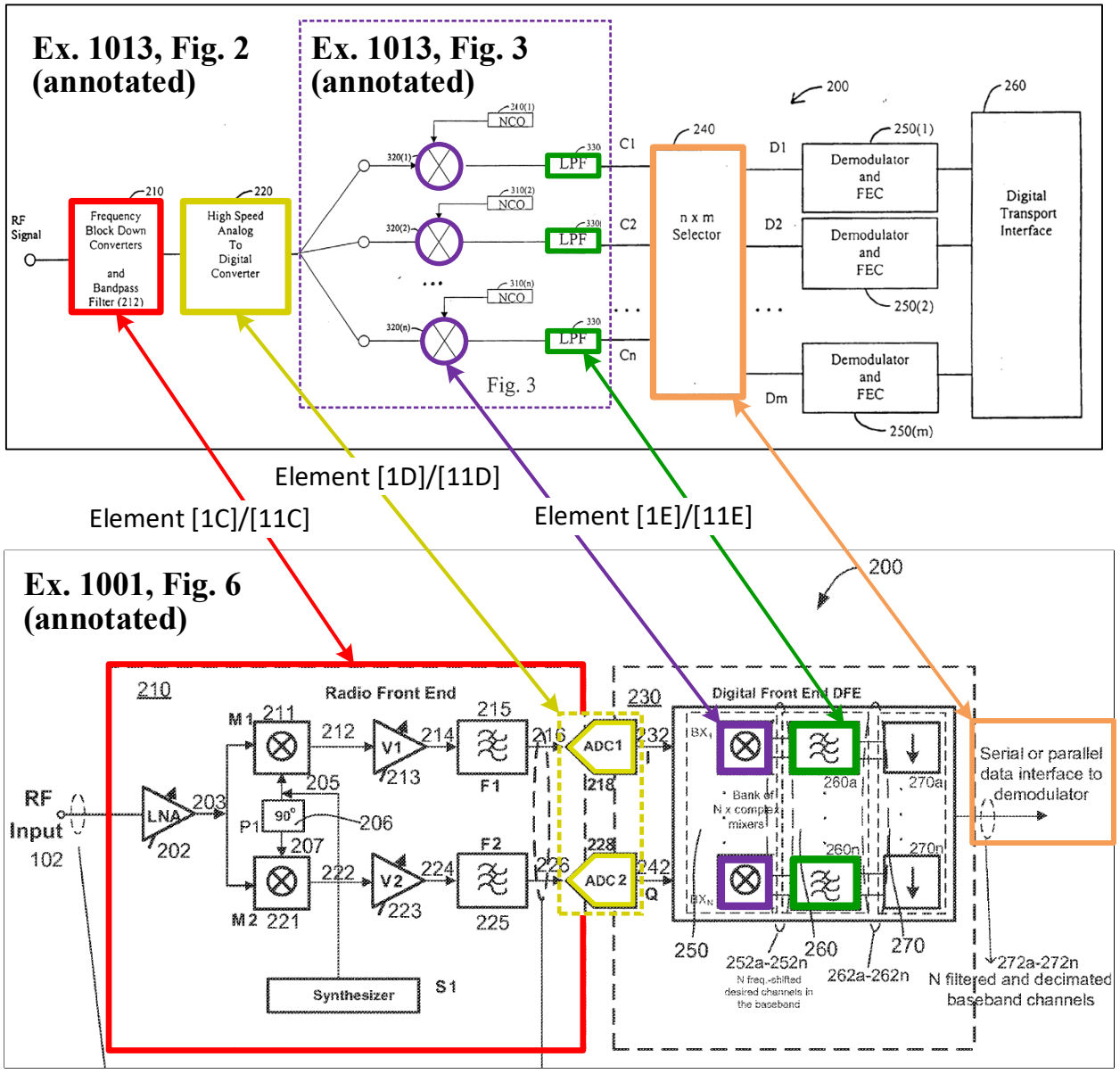

82. It is my opinion that Zhang is in the same field of endeavor as the ’275 patent, and thus is analogous art. For example, and like the ’275 patent, which “relates to wideband receiver systems and methods having a wideband receiver that is capable of receiving multiple radio frequency channels located in a broad radio frequency spectrum,” Zhang relates to a system and method for “receiv[ing] a multi-channel analog RF signal.” Ex. 1001, 1:32-35; Ex. 1013, [0010], Fig. 2. It is my

opinion that Zhang is also reasonably pertinent to problems with which the ’275 patent is concerned, and is also analogous art on that basis. For example, Zhang describes “support[ing] multiple simultaneous channels of digital content delivered over the cable system” by down-converting multi-channel analog RF signal to a multi-channel digital RF signal, conversion to baseband, and filtering in the same way as is described by the ’275 patent. Ex. 1001, 5:38-7:15, Figs. 2, 3; Ex. 1013, [0005], [0007], [0027], [0030], [0032], [0036], Figs. 2, 3.

8.6. U.S. Patent No. 7,237,214 – Pandey (Ex. 1014)

83. U.S. Patent No. 7,237,214 to Pandey (“Pandey”) indicates on its face that it was issued on June 26, 2007. Ex. 1014, cover. I understand that Pandey qualifies as prior art to the ’275 patent under pre-AIA § 102(b) because Pandey was published more than one year prior to the earliest claimed priority date (April 17, 2009) of the ’275 patent. I also understand that Pandey was not considered during prosecution of the ’275 patent. Ex. 1001, cover.

84. Pandey describes a computer aided technique for implementing a digital circuit design on a chip (e.g., field programmable gate arrays or application-specific integrated circuit). Ex. 1014, Abstract, 1:15-55, 2:4-12. The process involves partitioning functional blocks to different regions of an integrated circuit chip (e.g., 301, 303, 305, 307 as illustrated in Figure 3 of Pandey reproduced below)

and assigning wire traces (e.g., 351, 353, 355, 357) to interconnect the partitioned blocks. Ex. 1014, 1:56-60, 2:5-12, 2:64-3:5, 6:10-15, 11:6-19, 13:33-14:7.

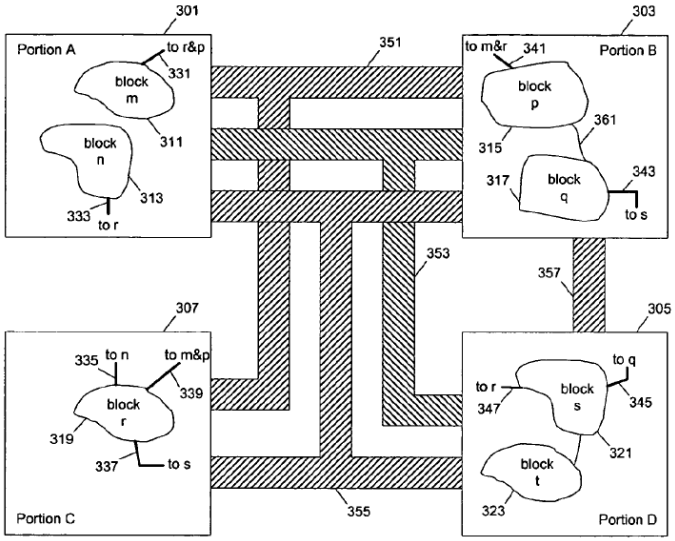

Ex. 1014, Fig. 3

85. Pandey recognizes that the number of signals (nets) between function blocks in different partitions may exceed the number of traces (physical wires) available inside a chip, and that in such cases, multiple signals must be time-multiplexed (i.e. transmitted serially) over a single trace. Ex. 1014, 10:24-53, 10:58-11:5, 29:44-58, 30:31-42. Pandey's process optimizes the partitioning of blocks based on reducing the multiplexing ratio of wires to signals required between partitions. Ex. 1014, 5:50-57, 6:11-15, 6:44-53, 7:13-19, 29:44-30:9, 30:53-31:12, 31:56-63, Figs. 38-39. Thus, depending upon the partitioning of the circuit design within finite area and finite interconnection of a chip, Pandey's optimization will in some layouts result in signals being grouped and time multiplexed through a serial

interface between partitions, and in other layouts result in signals having individual dedicated traces with no multiplexing, which is a parallel interface. Ex. 1014, 31:20-22, 32:12-15.

86. It is my opinion that Pandey is reasonably pertinent to problems with which the ’275 patent is concerned (as well as to problems with which Zhang is concerned), and is analogous art to the ’275 patent (and to Zhang) on at least that basis. The ’275 patent describes at length how signals may be processed in digital form. Ex. 1001, 5:56-7:25, Figs. 2-3. Zhang similarly includes such disclosure. Ex. 1013, [0025], [0027]-[0035], [0037]-[0039], [0042], Figs. 2-5. For example, the ’275 patent indicates that signals recovered from received RF signals may be output to a demodulator using a serial or parallel data interface, but leaves the particulars to “commonly known methods.” Ex. 1001, 7:16-20, Fig. 2. It is my opinion that a POSITA would consider Pandey, which describes both serial and parallel interfaces for groups of signals between digital functional blocks, as a pertinent example of those “commonly known methods.” Ex. 1014, 11:6-19, 13:33-55, 31:20-22, 32:12-15, Figs. 2-3. It is my opinion that a POSITA would similarly consider Pandey pertinent to Zhang, which describes digital circuitry configured to output the digital data stream using a single bus or multiple buses, which is functionally the same as the circuitry described in Pandey. Ex. 1013, [0038], [0039].

8.7. PCT Publication No. 2004/059933 – Zhang ’933 (Ex. 1077)

87. PCT Publication No. 2004/059933 to Zhang et al. (“Zhang ’933”) indicates on its face that it was published on July 15, 2004. Ex. 1077, cover. I understand that Zhang ’933 qualifies as prior art to the ’275 patent under pre-AIA § 102(b) because Zhang ’933 was published more than one year prior to the earliest claimed priority date (April 17, 2009) of the ’275 patent. I also understand that Zhang ’933 was not considered during prosecution of the ’275 patent. Ex. 1001, cover.

88. Zhang ’933 describes an improved multi-channel demodulator. Ex. 1077, Abstract, [0006]. The demodulator includes a demodulation engine (e.g., 44 (**brown**) as illustrated in Figure 3 of Zhang ’933 reproduced below), and corresponding data from a selected channel is processed by the demodulation engine. *Id*.

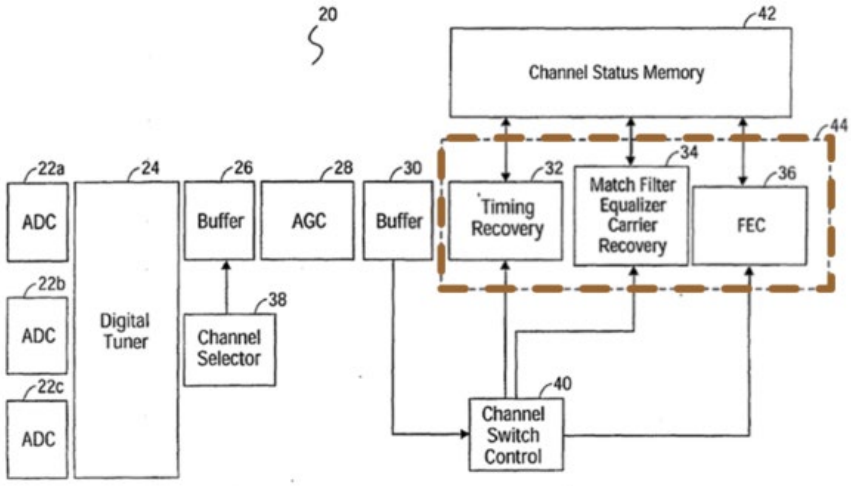

FIG. 3

Ex. 1077, Fig. 3 (annotated)

89. Zhang ’933 uses the single demodulation engine to demodulate digital data for multiple RF channels. Ex. 1077, [0009]. Zhang ’933’s demodulation engine processes channel data based on three operating modes: a data processing mode, a channel switching mode, and a waiting mode. Ex. 1077, [0007]. The demodulation engine in the data processing mode processes currently loaded channel data, and in the channel switching mode switches current channel data with selected data from another channel for processing. Ex. 1077, [0007], [0025]. Thus, various channels are able to share the demodulation engine without having to add additional components. Ex. 1077, [0007], [0009].

90. It is my opinion that Zhang ’933 is reasonably pertinent to problems with which the ’275 patent is concerned (as well as to problems with which Zhang is concerned), and is analogous art to the ’275 patent (and to Zhang) on at least that basis. The ’275 patent describes at length how signals may be processed in digital form. Ex. 1001, 5:56-7:25, Figs. 2-3. Zhang similarly includes such disclosure. Ex. 1013, [0027]-[0039], [0042], Figs. 2-5. For example, the ’275 patent indicates that signals recovered from received RF signals may be output to a demodulator using a serial or parallel data interface, but leaves the particulars to “commonly known methods.” Ex. 1001, 7:16-20, Fig. 2. It is my opinion that a POSITA would consider Zhang ’933, which teaches a serial interface for signals output to a single demodulator, as a pertinent example of those “commonly known methods.” Ex.

1077, [0006], [0007], [0009], [0025], Fig. 3. It is my opinion that a POSITA would similarly consider Zhang ’933 pertinent to Zhang, which describes digital circuitry configured to output the digital data stream using a single bus, which is functionally the same as the circuitry described in Zhang ’933. Ex. 1013, [0038], [0039].

8.8. Mirabbasi (Ex. 1018)

91. Mirabbasi (Ex. 1018) is a Non-Patent Literature published on November 2000, and thus, I understand Mirabbasi is prior art under pre-AIA 35 U.S.C. 102(b). I also understand that Mirabbasi was not considered during the prosecution of the ’275 patent. Ex. 1001, cover.

92. Mirabbasi discusses the advantages of using complex mixing (e.g., mixing RF signals with a complex exponential $\cos(2\pi f_{LO}t) - j\sin(2\pi f_{LO}t)$) instead of real mixing (e.g., multiplying RF signals with a sinusoid such as $\cos(2\pi f_{LO}t)$) when frequency shifting RF signals to a lower frequency to avoid image band problems associated with real mixing. Ex. 1018 at 5.

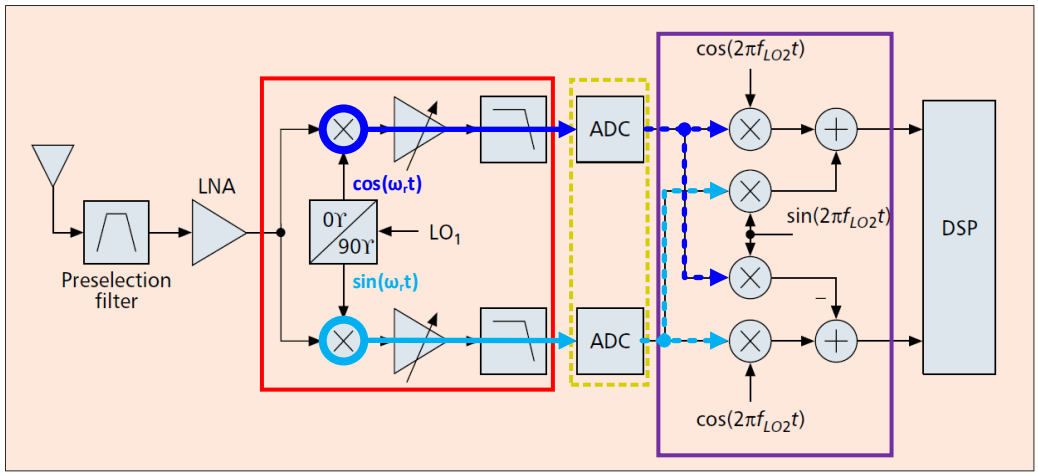

Ex. 1018, Fig. 10 (annotated)

93. Figure 10 of Mirabbasi shows an example of a well-known RF receiver architecture that is disclosed in the '275 patent (and in Zhang) where signals are down converted (i.e., frequency shifted to a lower frequency) through two mixing stages. Ex. 1018 at 10. The first mixing stage mixes an analog signal with a complex exponential via a complex mixing circuit of two mixers (**dark blue** and **light blue**). Ex. 1018 at 6, 10. The real and imaginary outputs of the first mixing stage are called the in-phase (I) and quadrature (Q) components of the frequency shifted signal (since cosine and sine are in quadrature). Ex. 1018 at 6. The in-phase (I) and quadrature (Q) components of the frequency shifted signal are digitized individually by two analog-to-digital converters (**gold**). Ex. 1018 at 10. The second mixing stage (**purple**) involves a complex mixing circuit with four mixers and two adders and further down converts the in-digital phase (I) and quadrature (Q) components before forwarding the components to the digital signal processor (DSP). Ex. 1018 at 6, 10.

94. It is my opinion that Mirabbasi is in the same field of endeavor as the '275 patent, and thus is analogous art. For example, and like the '275 patent, which "relates to wideband receiver systems and methods having a wideband receiver that is capable of receiving multiple radio frequency channels located in a broad radio frequency spectrum," Mirabbasi relates to "wireless receiver architectures used in wideband wireless communication systems." Ex. 1001, 1:32-35; Ex. 1018, 4. It is

my opinion that Mirabbasi is also reasonably pertinent to problems with which the ’275 patent and Zhang are concerned, and is analogous art to the ’275 patent (and to Zhang) on at least that basis. For example, the ’275 patent describes generating downconverted I and Q components of a received RF signal in the analog domain and digitizing those signals using an analog-to-digital converter. Ex. 1001, 4:40-7:20, Figs. 2-3. Mirabbasi similarly describes that the I and Q components of the frequency shifted signal are digitized individually by analog-to-digital converters. Ex. 1018 at 10. It is my opinion that a POSITA would similarly consider Mirabbasi pertinent to Zhang, which also describes a frequency block down-converter that receives a band of analog RF signals and shifts the band to a lower frequency such that an analog-to-digital converter can better process the signal to convert the analog RF signals to digital RF signals. Ex. 1013, [0010], [0023], [0025], [0027], [0030]-[0037], [0041]-[0042].

8.9. U.S. Publication No. 2004/0250284 – Dong (Ex. 1078)

95. Dong (U.S. Pub. No. 2004/0250284, Ex. 1078) is a U.S. Published Application published on December 9, 2004, and thus I understand Dong is prior art under pre-AIA 35 U.S.C. 102(b). Ex. 1078, cover. I understand Dong was not considered during the prosecution of the ’275 patent. Ex. 1001, cover.

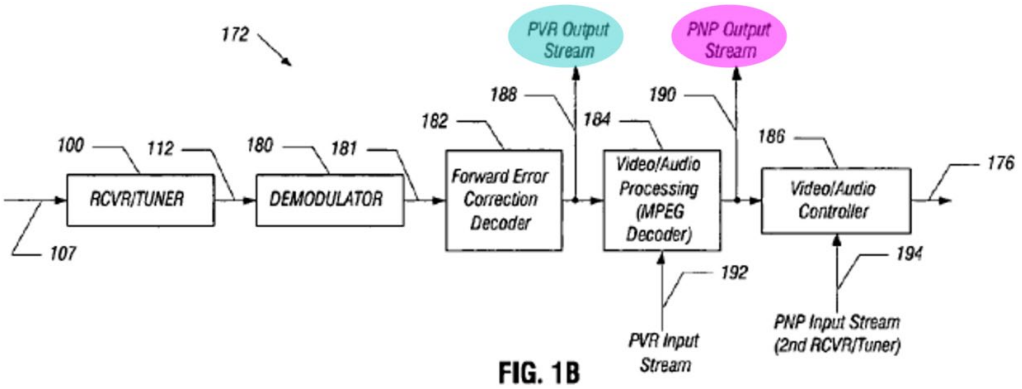

Ex. 1078, Fig. 1B (annotated)

96. Dong describes receiver architectures, especially set-top box receiver architectures for satellite television communications. Ex. 1078, [0002]. Figure 1B shows an example circuitry for a satellite set-top box that includes a receiver architecture 100. Ex. 1078, [0027]. Figure 1B shows an example personal video recorder (PVR) output stream 188 (**aqua**) that is generated from a processed output signal 181 that is output from a demodulator 180. *Id*. The PVR output stream 188 is stored by PVRs for later use and viewing by a user. *Id*. Figure 1B even shows this later use and viewing by the user by showing how the receiver circuit inputs stored data from a PVR as the PVR input stream 192 so it can output the stored data (via the MPEG decoder 184 and video/audio controller 186) for display to a user. *Id*.

97. Figure 1B also shows a picture-in-picture (PNP) output stream 190 (**magenta**) that is also generated from a processed digital data stream that is output from the demodulator 180. *Id*. The PNP output stream 190 is used for picture-in-picture operations (e.g., as a PNP viewing feed). *Id*. Figure 1B even shows this by

showing how the receiver circuit can input a PNP input stream 194 (from another receiver circuit like the one shown in Figure 1B) so it (specifically the video/audio controller 186) can combine the PNP input stream 194 with the stream from the MPEG decoder 184 to produce a picture in picture output signal 176 for display to a user. *Id*.

98. It is my opinion that Dong is in the same field of endeavor as the ’275 patent, and thus is analogous art. For example, and like the ’275 patent, which “relates to wideband receiver systems and methods having a wideband receiver that is capable of receiving multiple radio frequency channels located in a broad radio frequency spectrum,” Dong relates to a “receiver architectures and associated methods to provide initial analog course tuning of desired channels within a received signal spectrum [] selecting LO frequencies for use in down mixing an incoming signal spectrum.” Ex. 1001, 1:32-35; Ex. 1078, [0024]. It is my opinion that Dong is also reasonably pertinent to problems with which the ’275 is concerned (as well as to problems with which Zhang is concerned), and is analogous art to the ’275 patent (and to Zhang) on at least that basis. For example, the ’275 patent describes that “the receiver system may have to concurrently receive several desired channels that may or may not be contiguous”. Ex. 1001, 1:56-58, Fig. 1. Dong similarly describes a receiver configured to receive non-contiguous frequency channels. Ex. 1078, [0008], [0024], [0080]. In my opinion, a POSITA would similarly consider

Dong pertinent to Zhang, which also describes a frequency block down-converter that receives a band of analog RF signals and shifts the band to a lower frequency such that an analog-to-digital converter can better process the signal to convert the analog RF signals to digital RF signals. Ex. 1013, [0010], [0023], [0025], [0027], [0030]-[0037], [0041]-[0042].

9. OPINIONS WITH RESPECT TO THE '275 PATENT

9.1. Zhang Anticipates (Ground A) and Renders Obvious (Ground B) Claims 1-3, 5, 7-13, 15, and 17-20.

99. In the following, I provide an element-by-element analysis showing how Zhang anticipates and renders obvious claims 1-3, 5, 7-13, 15, and 17-20. To help illustrate how the disclosures of these references map to the claim limitations, I have color coded some of my remarks and some figures in the noted art below.

9.1.1. Independent Claim 1

100. The elements of claim 1 appear in the Claims Listing Appendix, labeled as Elements [1A]-[1F]. For the following reasons, it is my opinion that claim 1 is anticipated by Zhang.

a. [1A]: "A method for operating a television receiver, comprising:"

101. It is my opinion that Zhang discloses "[a] method for operating a television receiver, comprising:" as claimed.

102. It is my opinion that Zhang teaches this element. It is my opinion that Zhang's "demodulating signals" (including "demultiplexing a digital multi-channel RF signal") includes "operating a television receiver" as claimed in the '275 patent. Ex. 1013, [0009], [0029], [0041], Claims 13 and 28. Zhang describes "a wide-band receiver" for use in digital set-top boxes, PVRs, and home media centers. Ex. 1013, [0045]-[0047]. Specifically, Zhang describes that "[s]ystems using the invention are enabled to perform advanced wide-band front-ends for digital set-top boxes, PVRs, home gateways and home media centers." Ex. 1013, [0045].

103. As an example of part of Zhang's system, Zhang's multi-channel demodulator 200 illustrated below in Figure 2 receives a RF signal sourced by a variety of systems such as satellite systems, terrestrial TV systems, cable systems, etc. Ex. 1013, [0023], Figs. 2, 6-8. Zhang discloses "[a] method and circuitry for implementing digital multi-channel demodulation circuits." Ex. 1013, Abstract, [0004], [0009], claim 28. As part of describing this method, Zhang describes a method for operating the demodulation circuits (e.g., multi-channel demodulators 200, 600, 710, 810). Ex. 1013, [0009], [0023], [0029], [0041], [0044], [0045]. For example, with respect to the multi-channel demodulator 200 in Figure 2, Zhang describes a method for operating the multi-channel demodulator 200 that includes down-converting a multi-channel RF signal, separating it into selected channels, and feeding the selected channels into respective demodulators. Ex. 1013, [0023]-

[0029]. Zhang also describes that the demodulation circuits are for a "wide-band receiver" and receive signals for television systems. Ex. 1013, [0023], [0025], [0047]. Thus, Zhang discloses the claimed "method for operating a television receiver." Finally, Zhang's method comprises Elements [1B]-[1F]. *See* §§9.1.1.b-f, *infra*. Thus, it is my opinion that Zhang discloses Element [1A].

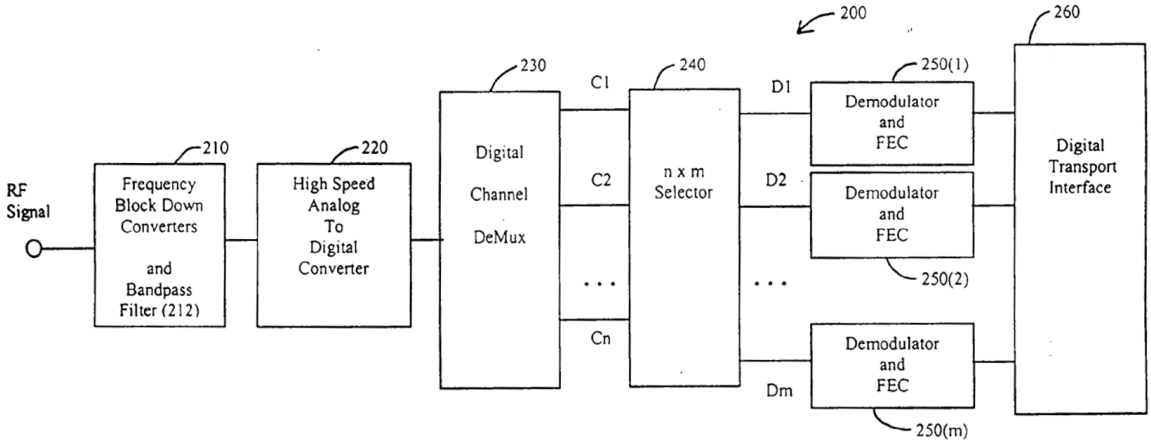

Fig. 2

Ex. 1013, Fig. 2

The RF channels received by Zhang's receiver are similar to those in the '275 patent. For example, Zhang discloses 35 channels, whereas the '275 patent discloses 10 channels. Ex. 1013, [0042]; Ex. 1001, 2:25-27, 4:47-50. Also, Zhang discloses a frequency band of 540-750 MHz, whereas the '275 patent discloses a frequency band of 80 Mhz. Ex. 1013, [0041]; Ex. 1001, 4:47-50. In both, some of the channels are desired and some are not desired. *Compare* Ex. 1013, [0032], [0041]-[0042], [0048], claims 34, 37 *with* Ex. 1001, 4:40-56.

b. [1B]: "receiving, by an input terminal, an input signal comprising broadcast channels, the broadcast channels comprising a plurality of desired channels and a plurality of undesired channels, wherein the plurality of desired channels are non-contiguous;"

104. It is my opinion that Zhang discloses "receiving, by an input terminal, an input signal comprising broadcast channels, the broadcast channels comprising a plurality of desired channels and a plurality of undesired channels, wherein the plurality of desired channels are non-contiguous," as claimed.

105. It is my opinion that Zhang discloses the claimed "receiving by an input terminal, an input signal comprising broadcast channels," by showing an input terminal (**blue**) in Figure 2 (below) for receiving the RF signal (the claimed "input signal"). The circle (**blue**) is the common/standard way of representing a terminal, as a POSITA would have appreciated. Moreover, a POSITA would have known that receivers, like demodulation circuit 200, have an input terminal for receiving (or inputting) the incoming RF signal that they will be processing. The fact that Zhang expressly describes the multi-channel RF signal as an "incoming RF signal" also tells a POSITA that there is an input terminal to receive (or input) the incoming RF signal. Ex. 1013, [0024].

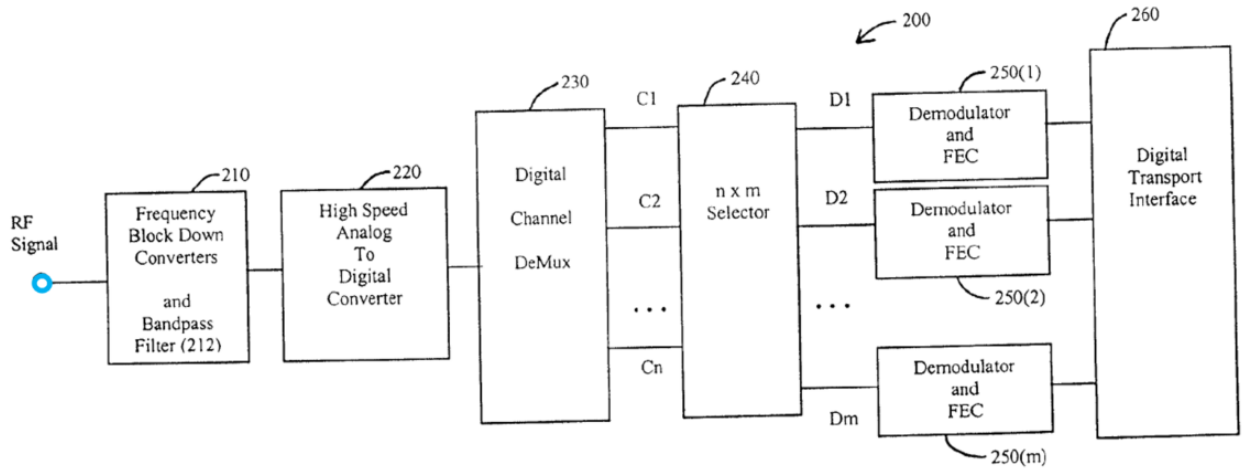

Ex. 1013, Fig. 2 (annotated)

106. The RF signal is an analog signal that includes multiple RF carrier signals or RF channels (the claimed "broadcast channels") that each includes one or more TV content channels from a TV system, for access by multiple subscribers. Ex. 1013, [0005], [0023]-[0025], [0029], [0040]-[0042], claims 1, 3, 13, 27-30, 33. For example, Zhang describes that "[a] frequency-block down-converter 210 receives one or more multi-channel analog RF signals which can be sourced by a variety of systems such as satellite systems, terrestrial TV systems, cable systems, etc." Ex. 1013, [0023]. A POSITA would have known that these are broadcast systems because they are used to broadcast channels carrying content to multiple subscribers. Ex. 1013, [0024] (explaining that the channels are "intended to be accessed or used by subscribers" (plural)). A POSITA would have understood that the multi-channel analog RF signal delivers multiple channels simultaneously to multiple homes according to a network schedule, so that consumers at each home can choose the video content they want. Ex. 1013, [0005]. A POSITA would have

understood that Zhang's multi-channel RF signal includes broadcast channels in the same way that the '275 patent's RF signal is described as including broadcast channels because it comes from a broadcast system. *Compare* Ex. 1013, [0023]-[0025], [0041] (describing known broadcast systems), [0045], [0047] (describing a wide-band receiver compatible with the known DOCSIS system standard) *with* Ex. 1001, 1:67-2:8, 2:33-39, 5:13-16, 9:3-15.

107. Further, the '275 patent describes "desired" channels as those that are extracted from the RF input signal and sent to a demodulator and "undesired" channels as those that are filtered out by the system. Ex. 1001, Abstract ("The wideband ADC is configured to concurrently digitize a band of frequencies comprising a plurality of desired channels and a plurality of undesired channels. …The DFE module is configured to select the plurality of desired channels from the digitized band of frequencies…"), 6:8-13 ("Each of the N complex mixers 250 … extract a different one of the desired channels"), 6:59-62 ("The frequency ω_{ct} is so chosen that each one of the desired channels … will be downshifted to the baseband."), 7:16-25 ("[T]he N desired baseband channels will be sent … to a demodulator…. This approach … removes undesired channels…"). Just like the '275 patent, Zhang's multi-channel analog RF signal comprises multiple RF carrier signals that include a plurality of desired television channels selected by a subscriber and a plurality of undesired television channels to be filtered out. Ex. 1013, [0024],

[0025], [0026], [0028] ("RF channels C_1 to C_n contain content channels that are selected or used by a subscriber"), [0032] ("each filters out all RF channels except for its target RF channel. Thus, only the target RF channel passes."), claims 2, 4, 34, 36, 37.

108. Some of the RF carrier signals or RF channels are "target" RF channels (the claimed "desired channels") and some are undesired RF channels (the claimed "undesired channels") which are filtered out. *Id*. The "target" RF channels may be selected by a subscriber or program provider, or pre-programmed. Ex. 1013, [0024] ("one RF channel can provide a variety of data streams, some of which are selected by a subscriber, e.g., audio, video, etc. Other data streams might be pre-programmed or selected by a program provider, e.g., conditional access data, etc."). Zhang further describes that a target frequency is generated to match the characteristic frequency of a desired RF channel in the multi-channel analog RF signal to select the desired RF channel. Ex. 1013, [0032], Fig. 3, claims 2, 34, 36, 37. Paragraph [0032] of Zhang is partially reproduced below.

> Numeric oscillator 310(1) generates a frequency, or "target" frequency, that matches the characteristic frequency of a desired RF channel, or "target" RF channel. The output of NCO 310(1) is multiplied by all the RF channels received at complex multiplier 320(1). When an [sic] multi-channel RF signal is multiplied with the output of NCO 310(1), the frequency of target RF channel signal is shifted to a desired channel.

109. As discussed further below (*see* Section 9.1.1.e regarding Element [1E]), Zhang discloses that the channel demultiplexer 230 selects target RF channels C_1 to C_n from among the plurality of RF channels within the RF signal and filters out unwanted RF channels. Ex. 1013, [0028]-[0032]. Therefore, Zhang discloses RF channels comprising target channels and unwanted channels, which discloses "the broadcast channels comprising a plurality of desired channels and a plurality of undesired channels," as claimed.

110. It is also my opinion that Zhang discloses the claimed "wherein the plurality of desired channels are non-contiguous" because Zhang discloses that "the RF channels can be in different frequency bands" and that "the RF channels need not be contiguous." Ex. 1013, [0048]. Zhang's target RF channels C_1 to C_n would have been selected from the non-contiguous RF channels, and therefore the target RF channels C_1 to C_n (the claimed "plurality of desired channels") would have also been non-contiguous. Ex. 1013, [0028]-[0032], [0042]. If every one of the non-contiguous RF channels are selected for the target RF channels C1 to Cn (which a POSITA would have understood is one of the examples disclosed by Zhang because 'n' can be any number), then the target RF channels C1 to Cn are necessarily non-contiguous too. A POSITA would have understood that by using 1 to 'n,' Zhang is simply numbering the selected channels to differentiate from each other but not requiring the channels to be consecutive or contiguous channels, and the 'n'

represents any of the RF channels that need not be contiguous. Ex. 1013, [0028]-[0032], [0042], [0048], Figs. 2-3. For example, there is nothing in Zhang that would tell a POSITA that the channel C_2 has to come immediately after channel C_1. *Id.* Rather, a POSITA would have understood that the channel C_1 is simply the RF channel within the multi-channel RF signal that the first complex mixer 320(1) and first NCO 310(1) are targeting and the channel C_2 is the RF channel within the multi-channel RF signal that the second complex mixer 320(2) and second NCO 310(2) are targeting. *Id.* Since the RF signals in the multi-channel RF signal would have been non-contiguous in at least some cases, the channel C_1 and channel C_2 would have also been non-contiguous in some cases. Moreover, Zhang discloses that at least three target RF channels C_1 to C_n would have been selected in some cases. Ex. 1013, [0028]-[0032]. For example, Figures 2 and 3 show C_1, C_2, and C_n. Ex. 1013, Figs. 2-3. In another example, Zhang discloses thirty-five target RF channels C_1 to C_{35}. Ex. 1013, [0042], Fig. 6. Whenever three or more target RF channels are selected, two of them are necessarily non-contiguous and those two alone would also meet the limitation in Element [1B] that the "plurality of desired channels are non-contiguous" because the two alone make a plurality. For example, if C_1, C_2, and C_3 were selected as Zhang discloses, then at least C_1 and C_3 would be non-contiguous and those two would be the claimed "plurality of desired channels" that are non-

contiguous. Thus, it is my opinion that Zhang discloses all of Element [1B] including the non-contiguous part of the claim.

111. If the Patent Owner argues that Zhang does not expressly disclose that the target RF channels C_1 to C_n (which I rely on for the claimed "plurality of desired channels") are non-contiguous, a POSITA would have found this condition obvious from Zhang alone. A POSITA would have recognized this condition as being taught by Zhang because Zhang discloses that "one or more multi-channel analog RF signals…can be sourced from a variety of systems such as satellite systems, terrestrial TV systems, cable systems, etc." Ex. 1013, [0023]. In addition, Zhang specifically points out the following known systems as examples of systems that would send the multi-channel RF signals: NTSC, ATSC, and DVB-T. Ex. 1013, [0029]. A POSITA would have understood that the RF signal used in any of the above referenced systems would include RF channels in "different frequency bands" that have a gap between them in at least some implementations or situations. Ex. 1013, [0048] ("Also, the RF channels need not be contiguous"), [0024]. Moreover, a POSITA would have understood that subscribers (such as the end users who are watching content such as television shows) select content channels according to their individual desires and regardless of the underlying frequencies used to carry the content channels. Ex. 1013, [0024], [0028], claims 3, 30. In other words, a human user selecting programs would normally not be aware of the channel on which those

programs were carried. Thus, a POSITA would have expected that, inevitably, a user would select content channels within non-contiguous RF channels. Indeed, the '275 patent recognizes that it was known that, inevitably, users would select (i.e., "desire") channels that are non-contiguous in a received RF bandwidth. Ex. 1101, 1:44-48, 1:52-58, 2:16-18. Thus, a POSITA would have expected Zhang's subscriber to select content channels within non-contiguous RF channels. In other words, Zhang's subscriber does not have to only select channels that are next to each other. Ex. 1013, [0028]. In fact, a POSITA would appreciate that, given the large number of channels already available at the time of Zhang, it would be statistically unlikely that all the channels selected by a user would be contiguous. If that were the case, it would be merely a coincidence and not the result of the design of Zhang's system. Rather, based on Zhang's system of using complex multipliers 320 and filters 330 to obtain target RF channels C_1 to C_n that contain the content channels selected by a user or subscriber, a POSITA would have expected that the target RF channels C_1 to C_n are not contiguous. Ex. 1013, [0028]-[0032]. Accordingly, in at least some (if not most) instances of operating Zhang's system, the target RF channels C_1 to C_n (which are the channels Zhang's complex mixers 320 target to capture the subscriber's desired content channels) would have been non-contiguous. Ex. 1013, [0028], [0032].

112. It is also my opinion that a POSITA would have been motivated to implement Zhang's system so that the target RF channels C_1 to C_n are non-contiguous because it improves the system's flexibility to access content. Ex. 1013, [0005], [0048]. A POSITA would not have wanted to be limited to target RF channels C_1 to C_n within a single frequency band because content would have been (in at least some instances) broadcast in separate frequency bands on non-contiguous RF channels. Ex. 1013, [0042], [0048]; Ex. 1079, 1:5-50, 2:6-12, 4:34-58, Figure 1 (which shows that it was known for TV channels to be transmitted in non-contiguous frequency bands); Ex. 1001, 2:33-39 (even the '275 patent acknowledges that it was known for desired TV channels to be carried in RF channels that are broadcast in non-contiguous bands). A POSITA would have wanted to improve the system so it would have the flexibility to receive content channels that are available in multiple, separated bands in some cases. A POSITA would have wanted to do this in order to increase the number of content channels that are accessible to subscribers (i.e., the end users who are looking for content to watch). Ex. 1013, [0005]. For example, if 180 content channels (10 RF channels with 18 content channels in each = 180) are in a first frequency band and 90 content channels (5 RF channels with 18 content channels in each = 90) are in a second frequency band, a POSITA would have implemented Zhang such that the target RF channels C_1 to C_n are selected from both bands to increase the total number of accessible content channels. Ex. 1013, [0042],

[0048]. At least some POSITAs would have been working for or building products for a television service provider, and such POSITAs would have wanted to increase the number of accessible content channels to attract subscribers and increase revenue. Ex. 1013, [0005].

113. A POSITA would have had a reasonable expectation of success in implementing Zhang such that the target RF channels C_1 to C_n are non-contiguous because doing so does not involve any structural change to Zhang's system (e.g., no new circuitry needs to be added for C_1 to C_n to be non-contiguous) or any additional steps. Ex. 1013, [0032], [0034], [0048]. Zhang's system already receives an RF signal comprising target RF channels C_1 to C_n and unwanted channels. Ex. 1013, [0032]. The condition that the target RF channels C_1 to C_n are non-contiguous is merely the result of setting the target frequency of Zhang's NCOs 310 to frequencies for non-contiguous channels. Ex. 1013, [0048]. More specifically, the target RF channels C_1 to C_n are selected by setting target frequencies for Zhang's NCOs 310 (more particularly, setting one target frequency for one NCO 310). Ex. 1013, [0032]. The target frequencies correspond to the characteristic frequencies of the desired RF channels (which are within the RF signal), and the desired RF channels are determined based on choices of a subscriber (e.g., a selection of a content channel by the subscriber) that are not influenced by Zhang's system. Ex. 1013, [0028], [0032]. A POSITA would have understood that Zhang's system is designed such

that it is indifferent as to whether the desired RF channels are contiguous or not. Ex. 1013, [0028]-[0032], Figs. 2-3. A POSITA would have also understood that Zhang's system is able to select non-contiguous RF channels just as easily as it is able to select contiguous channels. *Id.* A POSITA would have seen that there is no impediment in Zhang's system to setting the target frequencies of the NCOs 310 so that the target RF channels C_1 to C_n are non-contiguous. *Id.*

114. While I mapped Zhang's target RF channels C_1 to C_n to the claimed "desired channels" in this section above, there is another way to map Zhang to the claims. Specifically, Zhang's selected RF channels D_1 to D_m are also the claimed "desired channels." This is because Zhang discloses that the "nxm digital selector 240…selects one or more of the RF channels D_1 to D_m from one or more of the digital RF channels C_1 to C_n." Ex. 1013, [0028]. A POSITA would have understood that this disclosure means that there would have been instances where the number of selected RF channels D_1 to D_m is less than the number of target RF channels C_1 to C_n and there are multiple unselected RF channels. In these instances, a POSITA would have understood that the multiple unselected RF channels are the claimed "undesired channels." Ex. 1013, [0028], [0039], [0040].

115. In addition, the disclosure that the nxm digital selector 240 "selects one or more of the RF channels D_1 to D_m from one or more of the digital RF channels C_1 to C_n" tells a POSITA that there are numerous possibilities or embodiments. Ex.

1013, [0028]. Indeed, Zhang correctly explains that "one of ordinary skill in the art would recognize many other variations, modifications, and alternatives" and specifically points out that the "RF channels need not be contiguous." Ex. 1013, [0048]. As such, a POSITA would have understood that the possibilities or embodiments include any set of the RF channels C_1 to C_n being selected for the RF channels D_1 to D_m, including embodiments in which selected RF channels D_1 to D_m are non-contiguous channels. Ex. 1013, [0028]. For example, a POSITA would have understood that Zhang's disclosure covers the selected RF channels D_1 and D_2 being RF channels C_1 and C_4. In this case, the selected RF channels D_1 and D_2 (which are the claimed "desired channels" in this case) are non-contiguous because they do not include the intermediate channels C_2 and C_3 (which are the claimed "undesired channels" in this case). Ex. 1013, [0028], Fig. 6. Moreover, as explained above, the "non-contiguous" limitation is met as long as there are three selected channels because at least two of them are necessarily non-contiguous. Zhang discloses that at least three selected RF channels D_1 to D_m would have been selected in some cases. Ex. 1013, [0028]-[0032]. For example, Figures 2 and 3 show D_1, D_2, and D_m. Ex. 1013, Figs. 2-3. In another example, Zhang discloses twenty selected RF channels D_1 to D_{20}. Ex. 1013, [0042], Fig. 6. Whenever three or more RF channels are selected for D_1 to D_m, two of them are necessarily non-contiguous and those two alone would also meet the limitation in Element [1B] that the "plurality of desired channels are

non-contiguous" because the two alone make a plurality. For example, if D_1, D_2, and D_3 were selected as Zhang discloses, then at least D_1 and D_3 would be non-contiguous and those two would be the claimed "plurality of desired channels" that are non-contiguous. Thus, it is my opinion that Zhang discloses all of Element [1B] including the non-contiguous part of the claim under this alternative mapping (relying on D_1 to D_m) as well.

116. To the extent that the Patent Owner argues that Zhang does not expressly disclose the selected RF channels D_1 to D_m being non-contiguous, a POSITA would have found this condition obvious for the same reasons discussed above for why the target RF channels C_1 to C_n would have been non-contiguous because channels D_1 to D_m are selected from C_1 to C_n. Ex. 1013, [0042], [0048]. In addition, a POSITA would have been motivated to have the digital selector 240 select the channels D_1 to D_m such that they are non-contiguous channels because (i) a POSITA would have wanted to avoid demodulating RF channels among the targeted channels C_1 to C_n that a subscriber is not interested in or might not be subscribed to receive (e.g., a subscriber might not be subscribed to HBO so a POSITA would not want the circuit to demodulate the channel for HBO) and (ii) the subscriber would have been interested in or subscribed to content channels carried on non-contiguous RF channels. Ex. 1013, [0024], [0028], [0048]. The subscriber would have been interested in or subscribed to content channels carried on non-

contiguous RF channels because the subscriber is generally unaware of which RF channels are carrying which content channels and generally does not care about the features (such as continuity) of the RF channels as long as the subscriber can access the desired content channels and that the quality of the content is good. The subscriber would have selected content channels without regard to the RF channels carrying them (and therefore without regarding to whether the RF channels carrying them are contiguous). Subscribers have various interests and content channels of interest to the same subscriber would have been dispersed across the RF channels. In other words, the RF channels do not group content channels for a particular subscriber, but rather carry many content channels that are intended to appeal to many subscribers. A POSITA would have understood that demodulating only the selected channels D_1 to D_m that a subscriber is interested in or subscribed to (as opposed to all the channels C_1 to C_m) conserves resources (such as power), reduces costs and circuit size, and speeds up delivery of desired content channels to subscribers, which are advantages that provide motivation to a POSITA to perform such demodulating. Ex. 1013, [0028]. If only some channels are demodulated, the non-active demodulators 250 would use less power. Ex. 1013, [0009] (Zhang explaining that its system lowers power consumption), [0029] ("significant power saving is achieved"), [0037] ("reduces power consumption"), [0047] ("significant power savings"). Also, if fewer channels are demodulated, then less demodulators

250 are needed, which reduces costs and power of the circuit and reduces the size of the overall circuit (which would have been implemented on a chip in some cases and therefore helps to reduce the size of the chip). See Ex. 1013, [0009] (Zhang explaining that its system lowers costs), [0026] (explaining that reducing elements means "the cost of the overall system is reduced"), [0029] ("more RF channels can be demodulated in a single chip"), [0037] (explaining that reducing elements means "less real estate on a chip" is required), [0047] ("reduces overall system costs"); Ex. 1079, Abstract (Tenny teaches the desire to minimize the circuit), 1:5-8, 2:13-22. Further, faster delivery of content channels may be realized because time is not wasted demodulating channels that a subscriber does not choose to watch or cannot watch because of their level of subscription. Ex. 1013, [0028] ("Channel-search capabilities of the digital selector 240 renders it much faster than traditional analog channel switching through RF tuners. This is because only the selected channels are later demodulated . . ."), [0047] ("RF channel search through a digital selector is much faster"). Such faster delivery would allow a subscriber to quickly navigate to channels that they want and are subscribed to, thereby improving the subscriber's user experience. In other words, demodulating only selected channels improves efficiency of the system (uses it more efficiently) and improves the user experience.

117. Moreover, a POSITA would have understood that Zhang does not limit the channels D_1 to D_m to be in a particular order corresponding to the channels C_1 to

C_n. For example, the channels D_1 and D_2 do not have to be channels C_1 and C_2, respectively. For example, channel D_2 could be channel C_4, C_{10}, C_{35}, or any other channel among C_1 to C_n. Ex. 1013, [0028], Fig. 6. Also, because "the RF channels need not be contiguous" (which Zhang discloses in paragraph [0048]), a POSITA would have found it obvious to operate Zhang's system to select channels D_1 to D_m from those non-contiguous RF channels such that the selected RF channels D_1 to D_m were non-contiguous too. Ex. 1013, [0028], [0039], [0048]. A POSITA would have understood that the scenario in which the selected RF channels D_1 to D_m are non-contiguous is one of the finite results achieved by selecting channels from among non-contiguous channels. Ex. 1013, [0028], [0048]. For example, a POSITA would have understood that Zhang covers a scenario where the RF channels in the multi-channel RF signal are non-contiguous and all of those channels are targeted to get channels C_1 to C_n and then all of those are selected to get channels D1 to Dm, which results in channels D_1 to D_m being non-contiguous. Ex. 1013, [0028], [0048]. A POSITA would have been motivated to use Zhang's system to receive RF channels where desired channels are non-contiguous because television channels are broadcast on non-contiguous channels and it would have been preferable to maximize the availability of television channels. Ex. 1013, [0005], [0024], [0048].

118. A POSITA would have also had a reasonable expectation of success in implementing Zhang such that this alternative mapping is obvious in view of Zhang

alone. The reasons are similar to those that I discussed above. That is, a POSITA would have had a reasonable expectation of success in implementing Zhang such that the selected RF channels D_1 to D_m are non-contiguous because doing so does not involve any structural change to Zhang's system (e.g., no new circuitry needs to be added for C_1 to C_n to be non-contiguous) or any additional steps. Ex. 1013, [0032], [0034], [0048]. Zhang's digital selector 240 is already configured to select any subset of the RF channels C_1 to C_n in the RF input signal. Ex. 1013, [0028]. The condition that the selected RF channels D_1 to D_m are non-contiguous is merely the result of not selecting some of the RF channels C_1 to C_n. Ex. 1013, [0028], [0048].

119. In sum, Zhang discloses or teaches receiving, by the input terminal, the RF signal comprising broadcast RF channels, the broadcast RF channels comprising target RF channels C_1 to C_n and unwanted channels , wherein the target RF channels C_1 to C_n are non-contiguous. Thus, Zhang discloses or teaches Element [1B] in at least this way. Additionally, with respect to the alternative mapping, Zhang discloses or teaches receiving, by the input terminal, the RF signal comprising broadcast RF channels, the broadcast RF channels comprising selected RF channels D_1 to D_m and those of the channels from channels C_1 to C_n that were not selected for D_1 to D_m, wherein the selected RF channels D_1 to D_m are non-contiguous. Thus, Zhang discloses or teaches Element [1B] in this way too.

120. Thus, it is my opinion that Zhang discloses or teaches Element [1B] in multiple ways.

c. [1C]: "processing, by a radio front end coupled to the input terminal, the input signal to generate a processed input signal;"

121. It is my opinion that Zhang discloses "processing, by a radio front end coupled to the input terminal, the input signal to generate a processed input signal," as claimed. Figure 2 of Zhang (below) clearly shows that the down converter 210 (**red**) (the claimed "radio front end") is coupled to the input terminal (**blue**) (which is the claimed "input terminal" as explained above) that receives the input RF signal. Ex. 1013, [0023]-[0024].

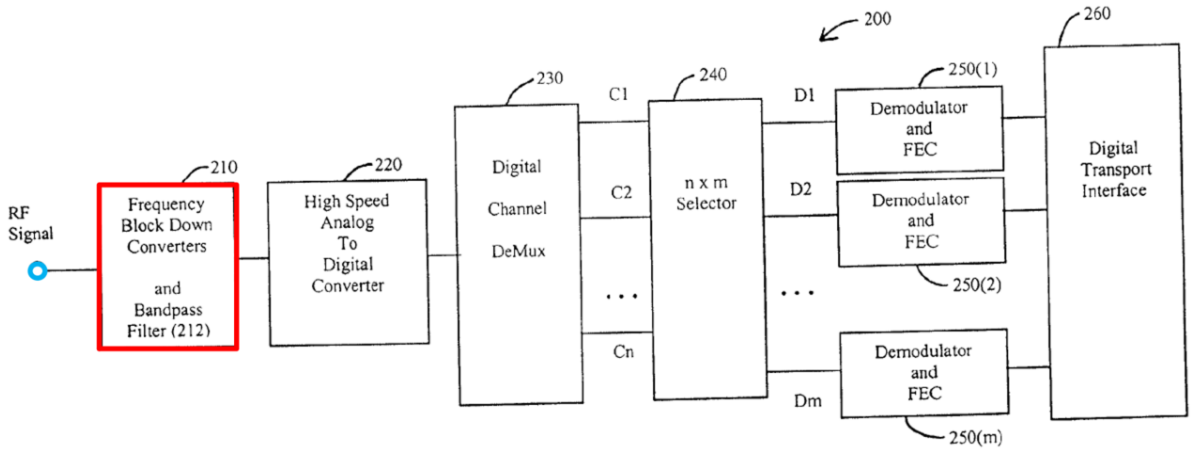

Ex. 1013, Fig. 2 (annotated)

122. The down converter 210 processes a multi-channel analog RF signal to generate a down-converted signal (the claimed "processed input signal"). Ex. 1013, [0025]. Specifically, the down converter 210 shifts the multi-channel analog RF signal to a lower frequency band. *Id*. This shifting of the RF signal (the claimed

"processing…the input signal") generates a down-converted signal (the claimed "processed input signal"). Ex. 1013, [0027] ("the down-converted multi-channel analog RF signal"). "More specifically, the multi-channel analog RF signal is multiplied by a reference signal to a lower frequency band. Signal components outside the lower frequency band are then filtered out. The frequencies are lowered so that subsequent stages can better process the signal." *Id*., [0025].

123. The down-shifting (or down-converting) performed by the down converter 210 in Zhang is the same as the down-shifting performed by the radio front end 210 in the '275 patent. *Compare* Ex. 1013, [0025]-[0026] *with* Ex. 1001, 2:10-12, 2:64-3:1, 4:65-5:47. In the '275 patent, the radio front end comprises mixers that "frequency down-convert[] the received RF input signal to a more convenient intermediate frequency (IF) band." Ex. 1001, 2:10-12, 2:64-3:1, 4:65-66. As such, the radio front end operates as a nominal zero-IF or low-IF down-mixer. Ex. 1001, 5:9-12, 5:40-47. The radio front end also comprises filters to "filter out any unwanted frequency components of the signals." Ex. 1001, 5:25-29. Given the description of a radio front end (e.g., radio front end 210) in the '275 patent, a POSITA would have understood that the down converter 210 of Zhang is the claimed "radio front end." In particular, because Zhang's down-converter 210 receives and processes the RF signal before the RF signal is demodulated just like how the radio front end 210 in the '275 patent receives and processes the RF input

signal 102 before demodulation, a POSITA would have understood that Zhang's down converter 210 is a radio front end as that term is used in the '275 patent. *Compare* Ex. 1013, [0023]-[0026], Fig. 2 *with* Ex. 1001, 4:42-6:19, Fig. 2. Zhang also describes its system, which includes the down-converter 210, as a "wide-band front-end[]." Ex. 1013, [0045].

124. In sum, Zhang discloses shifting, by the down converter 210 coupled to the input terminal, the multi-channel RF signal to generate a down-converted signal. Thus, it is my opinion that Zhang discloses Element [1C].

125. Further, to facilitate the understanding of Zhang's down-converting, I have included the following figure based on Zhang's description to illustrate how Zhang's system downconverts a plurality of frequencies that comprises a plurality of desired television channels and a plurality of undesired television channels. Based on the example described in Zhang, the figure shows a multi-channel analog RF signal between 540-750 MHz with 35 separate RF channels spaced at 6 MHz intervals. Ex. 1013, [0006] ("6 MHz intervals") ("Each channel's bandwidth is less than the spacing of the carrier frequencies. For example, carrier frequencies in the UHF band (300 MHz to 3 GHz) may be spaced at 6 MHz intervals."), [0041] ("the multi-channel analog RF signal is shown to be between 540-750 MHz"); *see also*, Section 8.1, *supra* (citing Ex. 1033 at 45, 413, 515-520). The multi-channel analog RF signal is down converted to a lower frequency band of 20-230 MHz via Zhang's

frequency block down converter 210. Ex. 1013, [0025] ("shifted to a band below 300 MHz, so that they can be processed by a pair of 300 MHz analog-to-digital converters (ADC), or by a single 600 MHz ADC.").

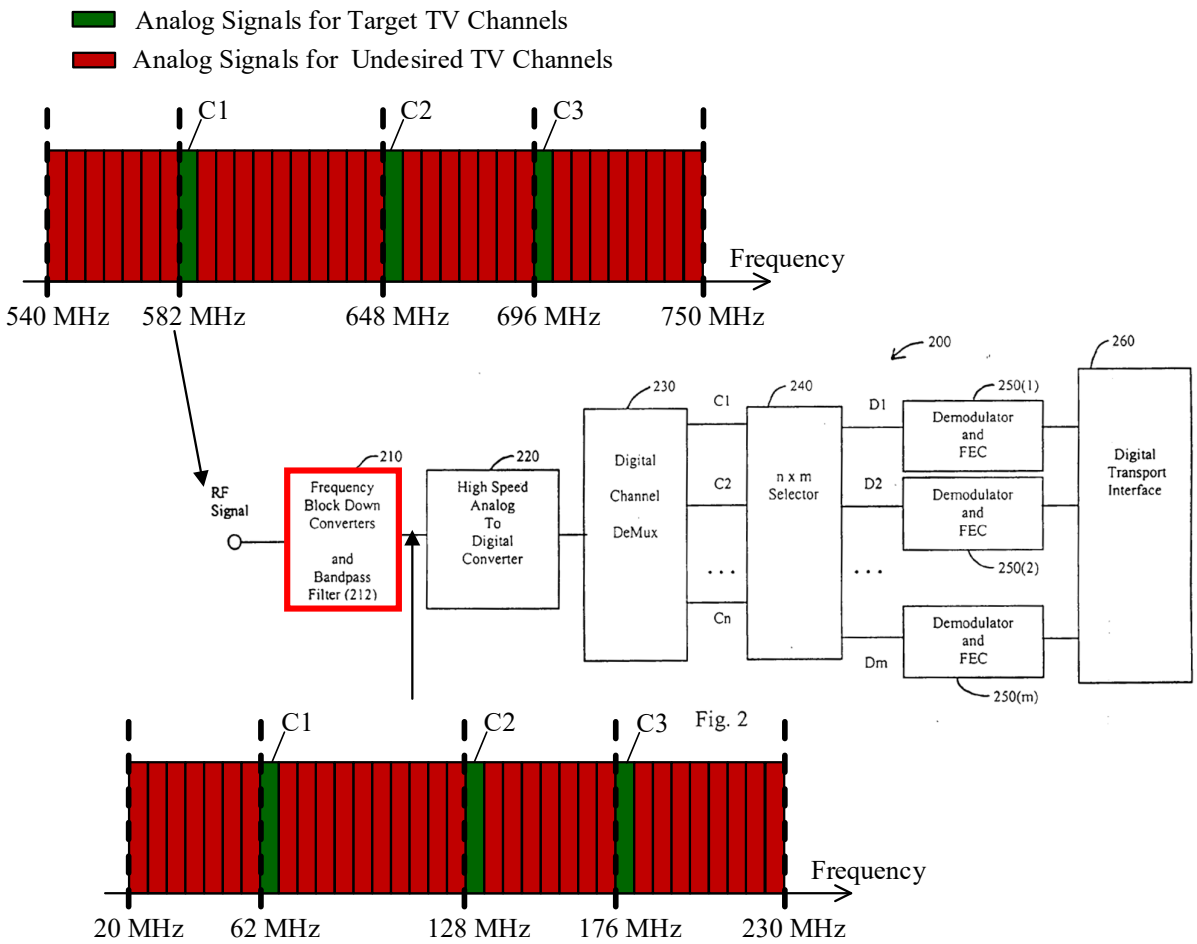

d. [1D]: "digitizing, by an analog-to-digital converter (ADC) coupled to the radio front end, the processed input signal to generate a digitized signal;"

126. It is my opinion that Zhang discloses "digitizing, by an analog-to-digital converter (ADC) coupled to the radio front end, the processed input signal to generate a digitized signal," as claimed. Figure 2 of Zhang (below) clearly shows

that the analog-to-digital converter (ADC) 220 (**gold**) (the claimed "analog-to-digital converter (ADC)") is coupled to the down converter 210 (**red**) (which is the claimed "radio front end" as explained above). Ex. 1013, [0027].

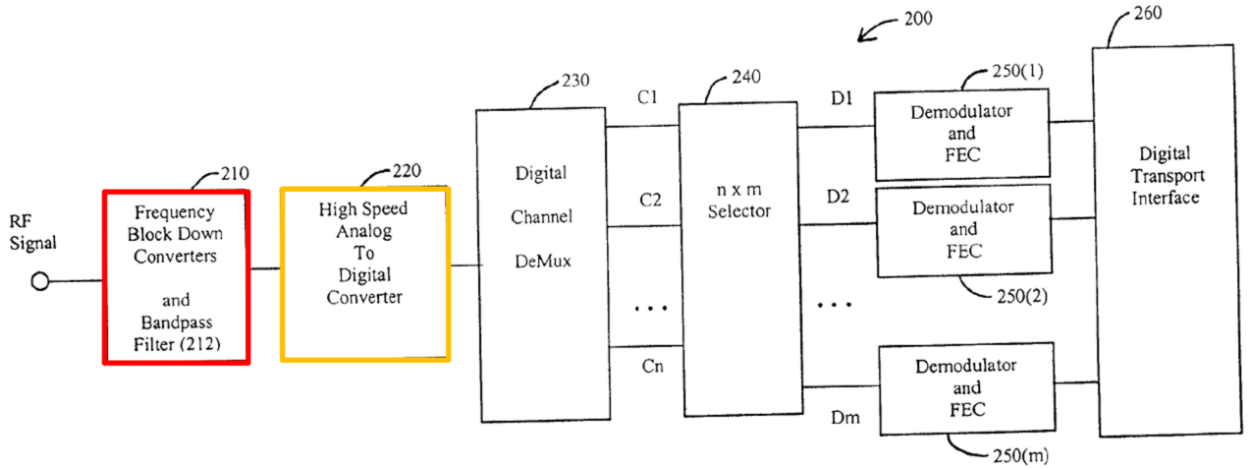

Ex. 1013, Fig. 2 (annotated)

ADC 220 receives the down-converted multi-channel analog RF signal (which is the claimed "processed input signal" as explained above with respect to Element [1C]), and converts the signal to a multi-channel digital RF signal ("digitized signal"). Ex. 1013, Abstract, [0010], [0025], [0027], [0042], claims 1, 7, 8, 28. This is similar to how the '275 patent describes its ADC. Ex. 1001, 5:53-56 (describing ADC digitizing analog filtered signals).

127. In sum, Zhang discloses digitizing, by the ADC 220 coupled to the down converter 210, the down-converted signal to generate a multi-channel digital signal. Thus, it is my opinion that Zhang discloses Element [1D].

e. [1E]: "selecting, by a digital frontend (DFE) coupled to the ADC, the plurality of desired channels from the digitized signal; and"

128. It is my opinion that Zhang discloses "selecting, by a digital frontend (DFE) coupled to the ADC, the plurality of desired channels from the digitized signal;" as claimed. This claimed "selecting" step is met in at least two different ways.

129. First, this claimed "selecting" step is met by the selecting done by the digital channel demultiplexer 230 in Figure 2 (shown below). The digital channel demultiplexer 230 (**purple**) is the claimed "digital frontend (DFE)". Zhang discloses that this component is implemented with a "standard process CMOS," which is a well-known type of digital logic integrated circuit. Ex. 1013, [0044], [0048]; Ex. 1016, at 17-19, 53-54. Moreover, the *digital* channel demultiplexer 230 is a *digital* frontend because it processes digital signals (in particular, it processes the multi-channel digital RF signal) before demodulation, just as the '275 patent's digital frontend processes digital signals before demodulation. *Compare* Ex. 1013, [0028]-[0032], Fig. 2 *with* Ex. 1001, 5:56-6:19, Fig. 2. Zhang also describes its system, which includes the demultiplexer 230, as a "wide-band front-end[]." Ex. 1013, [0045].

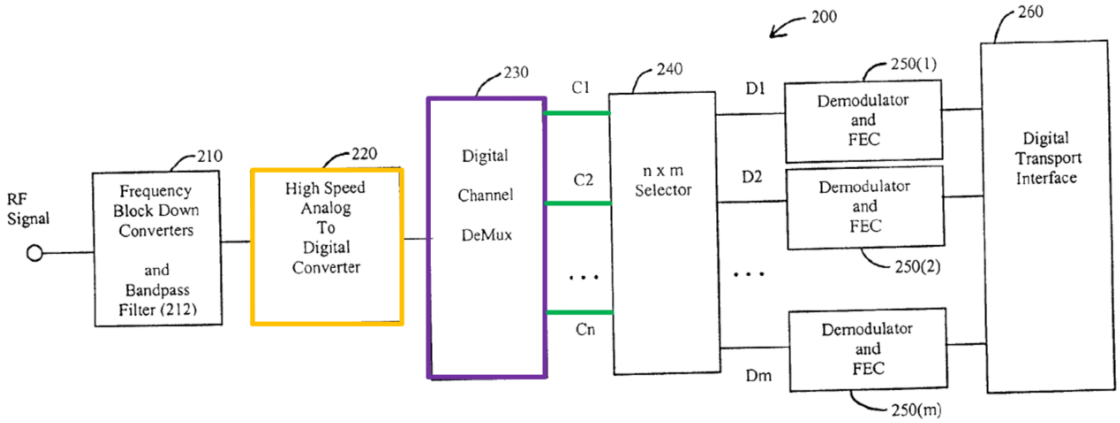

Ex. 1013, Fig. 2 (annotated)

130. As shown above, the digital channel demultiplexer 230 (**purple**) is coupled to the ADC 220 (**gold**), receives the multi-channel digital RF signal (the claimed "digitized signal") from the ADC 220, and selects from this signal a number "n" of desired or target RF channels C_1 to C_n (**green**), each having a unique characteristic frequency that matches a "target" frequency generated by one of the NCOs 310. Ex. 1013, [0028] ("RF channels C_1 to C_n contain content channels that are selected or used by a subscriber."), [0029]-[0032], [0042], claims 1, 2, 10, 11, 13, 16, 17, 21, 23, 27-28, 30, 33-34, 36-41, Figs. 2-3. Specifically, digital channel demultiplexer 230 (**purple**) selects only the desired television channels. Ex. 1013, claim 37 ("The method of claim 34 further comprising filtering undesired RF channels and passing only the target RF channel.").

131. Zhang uses the same technique as described by the '275 patent for selecting and outputting desired channels C_1 to C_n: first using a bank of complex mixers (**purple**) to frequency shift a digitized version of the downconverted

wideband signal (or multi-channel digital RF signal) so that each mixer outputs a different desired channel shifted to baseband (0 Hz), and then filtering out the undesired channels with low pass filters (**green**) so that only the target or desired channels remain. *Compare* Ex. 1001, 3:3-7, 3:21-28, 6:8-17 ("Each of the N complex mixers 250 receives the digital signals I 232 and Q 242 from ADCs 218 and 228 to extract a different one of the desired channels and frequency-shifts the extracted signals to the baseband frequency. Each of the frequency shifted desired channels 252 is filtered by an associated filter module (identified as 260 a to 260 n)."), 6:33-7:46 *with* Ex. 1013, [0027], [0030] ("Digital tuner 300 includes a bank of … complex multipliers 320(1 . . . n), and low-pass filters (LPFs) 330(1 . . . n). One chain of each of these elements is used for each RF channel."), [0031] ("digital tuner 300 receives the RF channels from an ADC". "The same multi-channel RF signal from the ADC enters each multiplier"), [0032] ("Numeric oscillator 310(1) generates a frequency, or "target" frequency, that matches the characteristic frequency of a desired RF channel, or "target" RF channel … the frequency of target RF channel signal is shifted to a desired channel", "the target RF channel is shifted to a baseband, i.e., centered at DC". "LPFs 330(1 . . . n) … each filters out all RF channels except for its target RF channel.").

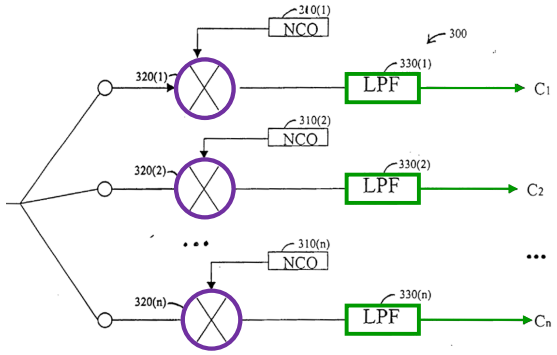

Fig. 3

Ex. 1013, Fig. 3 (annotated)

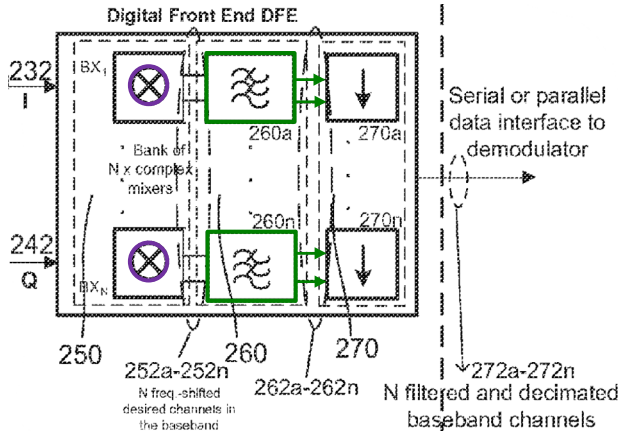

Ex. 1001, Fig. 2 (annotated)

132. To facilitate the understanding of how Zhang teaches Element [1E], I have included the following figure below to illustrate an example of selecting a plurality of desired television channels from digitized plurality of frequencies, as described in Zhang.

133. As shown in the figure below, each desired (i.e., target) channel (e.g., C1, C2, and C3) is "shifted to a baseband, i.e., centered at DC." Ex. 1013, [0032]. As shown in Fig. 3 of Zhang and as I explain in Section 8.3.2, "LPFs 330 (1 . . . n) receive all RF channels and each filters out all RF channels except for its target RF channel." Ex. 1013, Fig. 3, [0032], claim 37. Accordingly, only the desired RF channels (e.g., C1, C2, and C3) are shifted to a baseband (e.g., 0 MHz) and selected. *Id*.

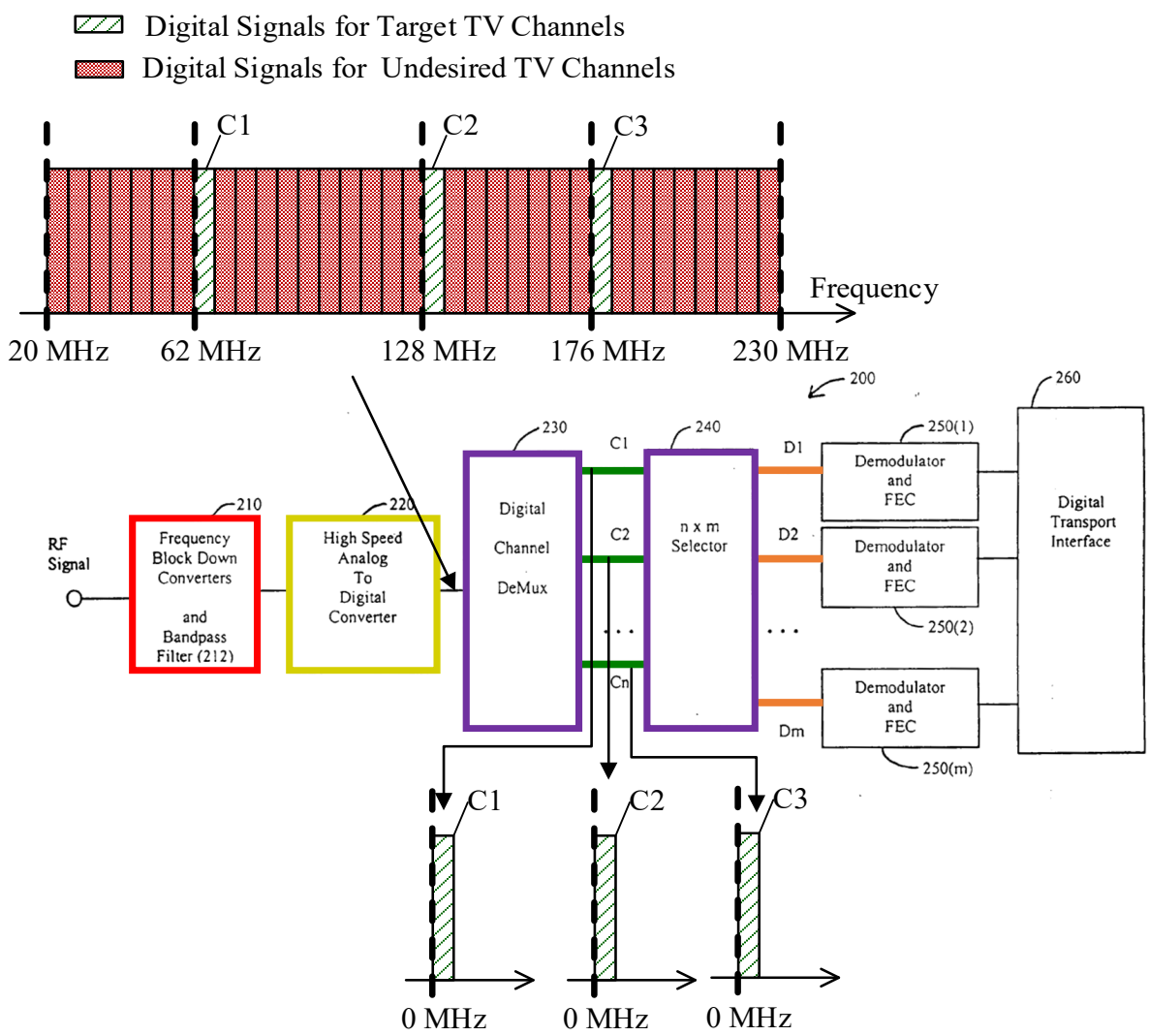

134. The desired channels are output by the digital channel demultiplexer 230 on paths C_1 to C_n (**green**), which a POSITA would have understood to be a serial or parallel digital data stream as described in the '275 patent, to demodulators 250(1)-250(m) via the digital selector 240. *Compare* Ex. 1013, Figs. 2-3, [0028]-[0029], [0032] *with* Ex. 1001, 7:16-20 ("N desired baseband channels will be sent as a serial or parallel digital data stream . . . according to commonly known methods, as shown in FIG. 2.").

135. Thus, it is my opinion that the digital channel demultiplexer 230 is a digital frontend that selects desired television channels from the multi-channel digital RF signal, as required by Element [1E].

136. As an alternative and in addition to the first way that the demultiplexer 230 alone performs the "selecting" step in Element [1E], a POSITA would have understood that a combination of the demultiplexer 230 and all or part of the digital selector 240 performs the claimed "selecting" step in a second way. More specifically, alternative to Zhang's demultiplexer 230 alone being mapped to the claimed "digital frontend (DFE)" and Zhang's target RF channels C_1 to C_n being mapped to the claimed "desired channels," Zhang's demultiplexer 230 in combination with all or part of Zhang's digital selector 240 (an example of part of the digital selector 240 is the bus selector 510 in Zhang's Figure 5) is the claimed "digital frontend (DFE)" and Zhang's selected RF channels D_1 to D_m are the claimed "desired channels." Ex. 1013, [0028]-[0032], [0042], Fig. 2 and Fig. 6. In Zhang, the combination of the demultiplexer 230 (**purple**) and digital selector 240 (also **purple**) is coupled to the ADC 220 (**gold**) and selects [after first selecting target RF channels C_1 to C_n **(green)** as explained above] the RF channels D_1 to D_m (**orange**) from the multi-channel digital RF signal that is output by the ADC 220 (**gold**), as shown in Fig. 2 below. Ex. 1013, [0028]-[0032], [0042], Fig. 2.

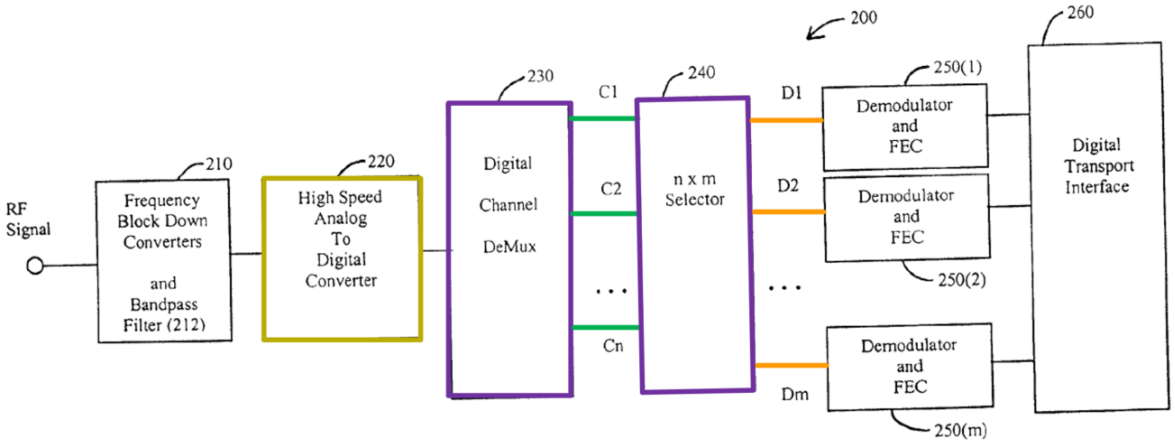

Ex. 1013, Fig. 2 (annotated)

137. The combination of the *digital* channel demultiplexer 230 (**purple**) and *digital* selector 240 (**purple**) is also a *digital* frontend because it processes digital signals (in particular, it processes the multi-channel digital RF signal) before demodulation, just as the '275 patent's digital frontend processes digital signals before demodulation. *Compare* Ex. 1013, [0028]-[0032], [0042], Fig. 2 *with* Ex. 1001, 5:56-6:19, Fig. 2. Zhang also describes its system, which includes the demultiplexer 230 and digital selector 240, as a "wide-band front-end[]." Ex. 1013, [0045].

138. The digital selector 240 selects channels $D_1 – D_m$ to output as a serial or parallel digital data stream to "one or more" demodulators 250(1) – 250(m). Ex. 1013, [0028]-[0029], [0038]-[0039], [0047], claims 2-5, Fig. 3. $D_1 – D_m$ may include all or just some of the channels $C_1 – C_n$. Ex. 1013, [0028] ("digital selector 240 … selects one or more of the RF channels D_1 to D_m. **from one or more** of the digital

RF channels C_1 to C_n") (emphasis added). For m=n, all of the selected channels C1 to Cn are output to one or more demodulators, and for m<n, the user may output some or all n channels of C1 to Cn to the demodulators. Ex. 1013, [0028]-[0029], [0038]-[0039]. By switching through the demultiplexed channels C_1 to C_n selected by the user, the digital selector 240 provides the subscriber with fast channel search capabilities. Ex. 1013, [0005], [0028] ("Channel-search capabilities of the digital selector 240 renders it much faster than traditional analog channel switching through RF tuners."), [0047], claims 3, 30.

139. Where the set of channels D_1 to D_m includes all of the channels C_1 to C_n, the digital channel demultiplexer 230 selects the desired channels and filters out the undesired channels as described above. So, even in this case, the set of channels D_1 to D_m still represents only the desired channels and the undesired channels are the unwanted or non-targeted channels that did not even make it into the set of channels C_1 to C_n. Ex. 1013, [0026], [0032]. Alternatively, a POSITA would understand that where D_1 to D_m includes less than all channels C_1 to C_n, the combination of the digital channel demultiplexer 230 and the digital selector 240 teaches the claimed selecting of the desired channels, in that a channel that is both demultiplexed by 230 and switched by 240 to a demodulator is "desired" and all other channels from the digital multi-channel RF signal (e.g., unselected channels among channels C_1 to C_n) are "undesired." Ex. 1013, [0028] ("digital selector 240

… selects one or more of the RF channels D_1 to D_m from one or more of the digital RF channels C_1 to C_n. RF channels C_1 to C_n contain content channels that are selected or used by a subscriber."), [0029] ("demodulators 250(1… m) demodulate only the RF channels that are selected by digital selector 240"), [0030], [0032]-[0033], [0040], [0042], [0048], claims 2, 4, 36-37.

140. In sum, Zhang discloses selecting, by the demultiplexer 230 coupled to the ADC 220, the target RF channels C_1 to C_n from the multi-channel digital RF signal output by the ADC 220. Thus, Zhang discloses Element [1E] in at least this way. Additionally, with respect to the alternative mapping, Zhang discloses selecting, by the combination of the demultiplexer 230 and digital selector 240 coupled to the ADC 220, the selected RF channels D_1 to D_m from the multi-channel digital RF signal output by the ADC 220. Thus, Zhang discloses Element [1E] in this way too.

f. [1F]: "outputting, by the DFE, the selected plurality of desired channels to at least one demodulator as a digital datastream, wherein the demodulator extracts information encoded in the digital datastream."

141. It is my opinion that Zhang discloses "outputting, by the DFE, the selected plurality of desired channels to at least one demodulator as a digital datastream, wherein the demodulator extracts information encoded in the digital datastream," as claimed.

142. As shown by Fig. 2 below, Zhang discloses demultiplexer 230 (**purple**) (the claimed "DFE") outputting the target RF channels C_1 to C_n (**green**) (the claimed "selected plurality of desired channels") as a digital datastream to one or more demodulators 250(1)-250(m) (**brown**) (which is claimed "at least one demodulator") via the digital selector 240 (**purple**). Ex. 1013, [0028]-[0029], [0042], Fig. 2.

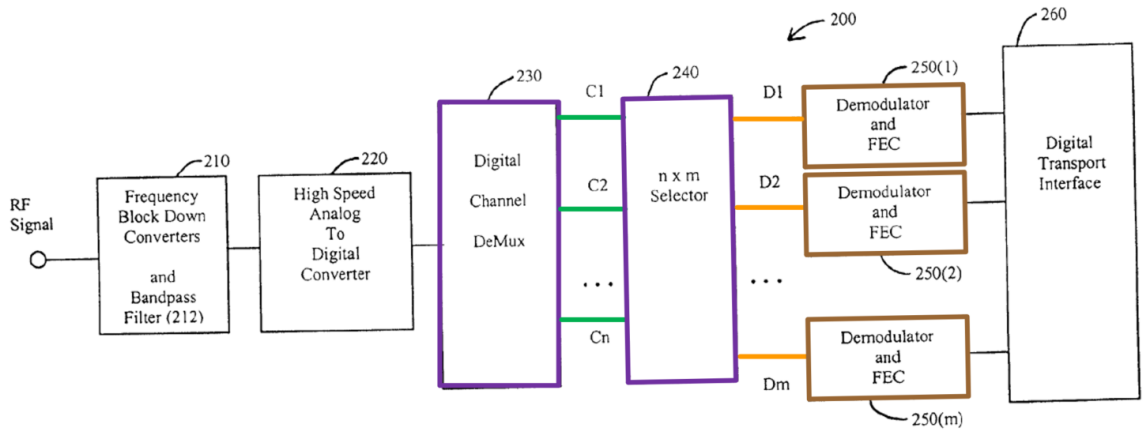

Ex. 1013, Fig. 2 (annotated)

143. Further, the digital selector 240 (**purple**) selects channels D_1 to D_m (**orange**) (which comprise any or all of the target RF channels C_1 to C_n (**green**)) to feed the target RF channels C_1 to C_n (**green**) as a digital datastream to the demodulators 250(1)-250(m) (**brown**). Ex. 1013, [0028]-[0029], [0038]-[0039], [0047], claims 2-4, Figs. 2, 5. For m=n, all of the target RF channels C_1 to C_n (**green**) are fed to the demodulators 250(1)-250(m) (**brown**). Ex. 1013, [0028]-[0029], [0038]-[0039], claims 2-4, 31-32.

144. Zhang discloses that the digital selector 240 is configured to output the claimed "digital datastream" with its bus selector 510, which receives channels C_1

to C_n and sends the channels across one or more clocked data buses. Ex. 1013, Fig. 5, [0038], [0039]. As Zhang explains, "each bus can be used by multiple RF channels with the use of time division multiplexing . . . and each output RF signal from a channel demultiplexer (not shown) can be selected to use any data bus." Ex. 1013, [0039].

145. Zhang's Figure 5 provides an example of the digital selector 240 (**purple**), showing how it has a bus selector 510 that feeds the target RF channels C_1 to C_n (**green**) through one or more data buses 520. Ex. 1013, [0038]-[0039], Fig. 5. Because each of the target RF channels C_1 to C_n (**green**) is fed through a data bus and comprises digital data (e.g., a series of bits) for one or more content channels (which provide video data streams, for example, for television shows), a POSITA would have understood that the target RF channels C_1 to C_n are output as a digital datastream. Ex. 1013, [0024], [0028]-[0029], [0038]-[0042], [0044], claim 3.

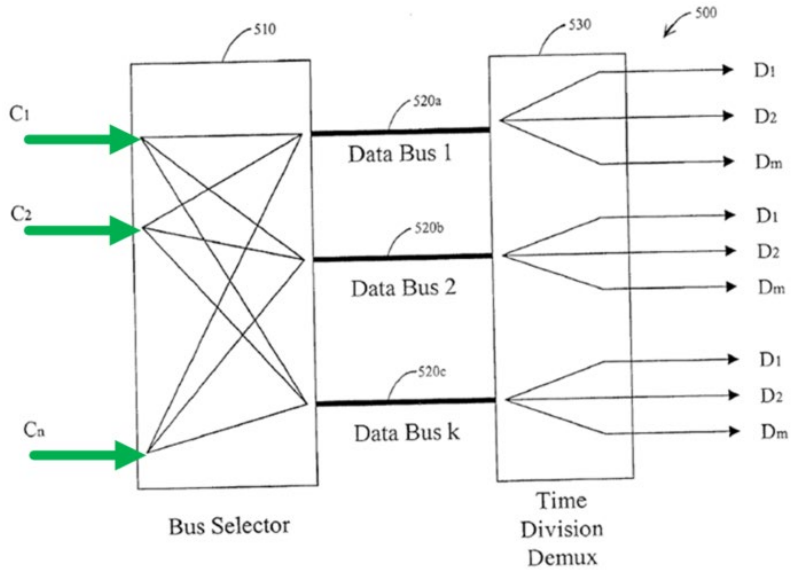

Ex. 1013, Fig. 5 (annotated)

146. Additional examples of how the digital selector 240 would have transferred or fed the channels as digital datastreams through the busses 520 are shown below. Specifically, Zhang's digital selector 240 is shown annotated below (left) sending the selected channels using "time division multiplexing" (i.e., alternating data from each channel sequentially) across one bus in a serial digital data stream, and shown annotated below (right) sending the selected channels "through different data buses" in a parallel digital data stream. *Id*.; Ex. 1016, at 79-80 (Figure 6-25); *see also* Section 9.1.2 (Claims 2 and 3 parallel and serial interfaces), *infra*. These are the same methods for outputting a digital data stream that the '275 patent describes as "commonly known." Ex. 1001, 7:16-20 ("… N desired baseband channels will be sent as a serial or parallel digital data stream to a demodulator using a serial or parallel data interface according to commonly known methods, as shown in FIG. 2.")

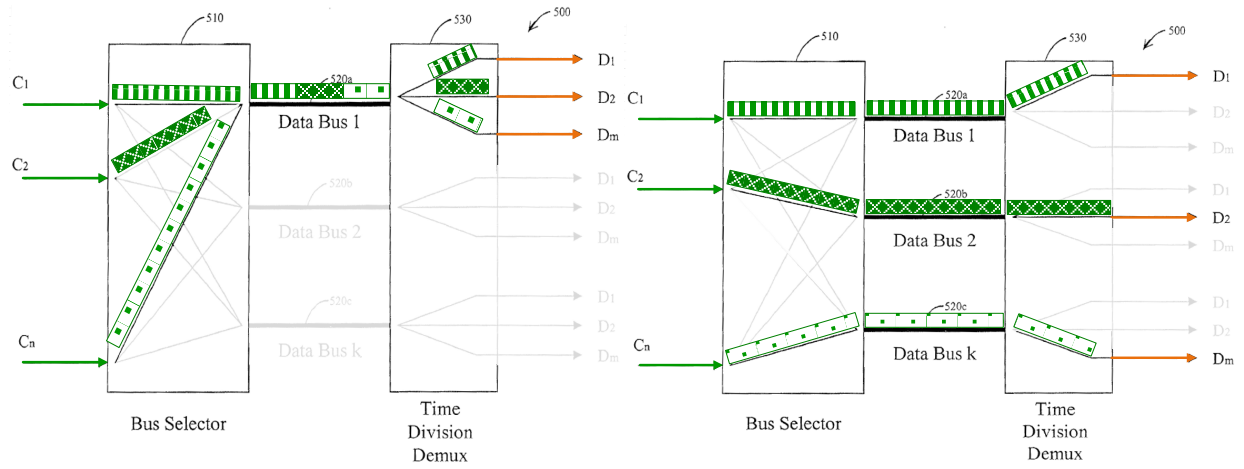

Ex. 1013, Fig. 5 (annotated)

147. Zhang discloses that the digital RF channels in the digital data stream are received from the digital selector 240 and demodulated by "one or more demodulators," and that multiple demodulators (250(1), 250(2), . . . 250(m)) may be "shared demodulators" with common functional blocks. Ex. 1013, claims 1, 2 ("one or more demodulators configured to receive one or more of the selected digital RF channels from the selector and to demodulate the one or more selected digital RF channels"), *see also* [0029], [0038], [0039], [0047], claims 4, 9, 31-32. Zhang's demodulators 250(1)-250(m) (**brown**), like the '275 patent's demodulators, perform demodulation, which entails extracting information encoded in the digital datastream. *Compare* Ex. 1013, [0005], [0007], [0011], [0029], [0042], claim 2 *with* Ex. 1001, 6:13-17. For example, Zhang's demodulators 250(1)-250(m) (**brown**) recover the bits of the video content that is encoded in the target RF channel C_1 to C_n (**green**). Ex. 1013, [0005], [0007] (recover bits), [0029], [0042], [0045] (reception of entertainment and information content), claim 2. A POSITA would have

understood that demodulation is the function of extracting (or recovering) information from encoded (or modulated) datastreams. See Sections 8.2, 8.3.1, and 8.3.5 above; Ex. 1033 at 61, 292, 316; Ex. 1036, [0078], [0119]; Ex. 1015 at pp. 6-7 (IEEE dictionary defining "demodulation" as "The reconversion of a modulated signal back into its original form by extracting the data from the modulated carrier").

148. Zhang also discloses Element [1F] when the alternative mapping (which maps the combination of the demultiplexer 230 and digital selector 240 to the claimed "DFE" and the selected RF channels D_1 to D_m to the claimed "desired channels") is applied. In that case, Zhang discloses that the digital selector 240 (**purple**) outputs the selected RF channels D_1 to D_m (**orange**) through data buses as a digital datastream to one or more demodulators 250(1)-250(m) (**brown**), as shown in Fig. 2 below. Ex. 1013, [0029], [0038]-[0039], [0042], claims 2-4, Figs. 2, 5.

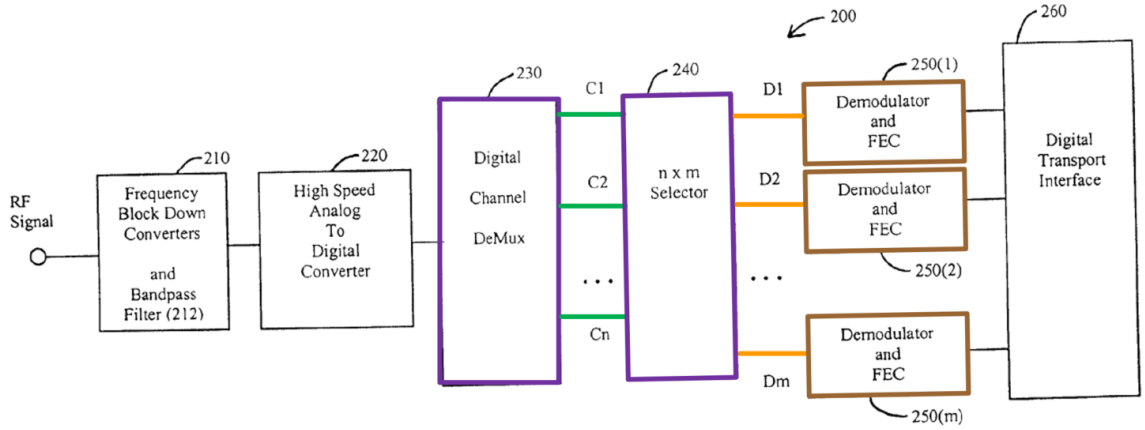

Ex. 1013, Fig. 2 (annotated)

149. Because each of the selected RF channels D_1 to D_m (**orange**) is fed through a data bus and comprises digital data (e.g., a series of bits) for one or more

content channels (which provide video data streams, for example, for television shows), a POSITA would have understood that the selected RF channels D_1 to D_m are output as a digital datastream. Ex. 1013, [0024], [0028]-[0029], [0038]-[0042], [0044], claim 3.

150. Zhang further teaches that multiple demodulators that share resources can be in a single chip. Ex. 1013, [0029] ("Many functional blocks can be shared between different demodulators ... Hence … more RF channels can be demodulated in a single chip."). This chip is similar to the device described in the '275 patent for demodulating multiple digital RF channels. Ex. 1001, 6:3-7, 6:13-19, 7:16-20, 8:29-40, 9:57-60. Thus, the demodulators 250 of Zhang are the claimed "at least one demodulator."

151. In sum, Zhang discloses outputting, by the demultiplexer 230, the target RF channels C_1 to C_n to one or more demodulators 250(1)-250(m) as a digital datastream, wherein the demodulators 250(1)-250(m) extract information (such as video content like television shows) encoded in the digital datastream. Thus, Zhang discloses Element [1F] in at least this way. Additionally, with respect to the alternative mapping, Zhang discloses outputting, by the combination of the demultiplexer 230 and digital selector 240, the selected RF channels D_1 to D_m to one or more demodulators 250(1)-250(m) as a digital datastream, wherein the demodulators 250(1)-250(m) extract information (such as video content like

television shows) encoded in the digital datastream. Thus, Zhang discloses Element [1F] in this way too.

9.1.2. Dependent Claim 2 and 3

[2] "The method of claim 1, wherein the DFE outputs the digital datastream via a serial interface."

[3] "The method of claim 1, wherein the DFE outputs the digital datastream via a parallel interface.."

152. It is my opinion that Zhang describes "[t]he method of claim 1, wherein the DFE outputs the digital datastream via a serial interface," as recited in claim 2, and "[t]he method of claim 1, wherein the DFE outputs the digital datastream via a parallel interface," as recited in claim 3.

153. Claims 2 and 3 are similar, and only differ with regard to a type of interface via which the digital datastream is output. Ex. 1001, claims 2, 3. Claim 2 recites output "via a serial interface," while claim 3 recites output "via a parallel interface." *Id*.

154. As I discuss above with respect to Element [1E] and Element [1F], Zhang discloses a digital channel demultiplexer 230 and a digital selector 240 that select one or more digital RF channels C_1 to C_n, and output all or a subset of these selected channels as D_1 to D_m to one or multiple shared demodulators via one or more data buses 520 in Fig. 5. Ex. 1013, [0029], [0038], [0039]. Moreover, as I

explained above, I relied on Zhang's demultiplexer 230 alone (or in combination with all or part of digital selector 240) for the claimed "DFE," and I relied on the digital datastream for the target RF channels C_1 to C_n or for the selected RF channels $D_1$to D_m as the claimed "digital datastream."

155. Zhang's demultiplexer 230 outputs the digital datastream for the target RF channels C_1 to C_n via the digital selector 240, which is the claimed "serial interface" in some scenarios and the claimed "parallel interface" in other scenarios. This is because digital selector 240 (exemplified in Figure 5) includes a bus selector 510 that transfers the target RF channels C_1 to C_n on the same data bus 520 in one scenario and on different data buses 520 in another scenario. Ex. 1013, [0028]-[0029], [0038]-[0040], Fig. 5. Specifically, Zhang describes the buses being used in multiple different ways, including: A) sending the selected channels across one bus "with the use of time division multiplexing," and B) sending the selected channels "through different data buses." These two scenarios are illustrated in the annotated figures below. Ex. 1013, [0038], [0039]. Both figures show annotations to Figure 5 of Zhang, which illustrates an example of the digital selector 240 showing that it may include a bus selector 510 for controlling how the target RF channels C_1 to C_N are transferred to the data buses. Ex. 1013, [0028]-[0029], [0038]-[0040], Fig. 5. As shown on the left, in the first scenario one bus (i.e., Data bus 1) receives data from each selected channel (represented by green blocks with different cross hatch

patterns) and sends the data from the different channels sequentially in different time intervals (i.e., time division multiplexing). Ex. 1013, [0038], [0039]; Ex. 1016, at 79-80 (Figure 6-25). As shown on the right, in the second scenario data from each bus is sent through a separate data bus 1-k. Ex. 1013, [0038]-[0039]; Ex. 1016, at 79-80 (Figure 6-25).

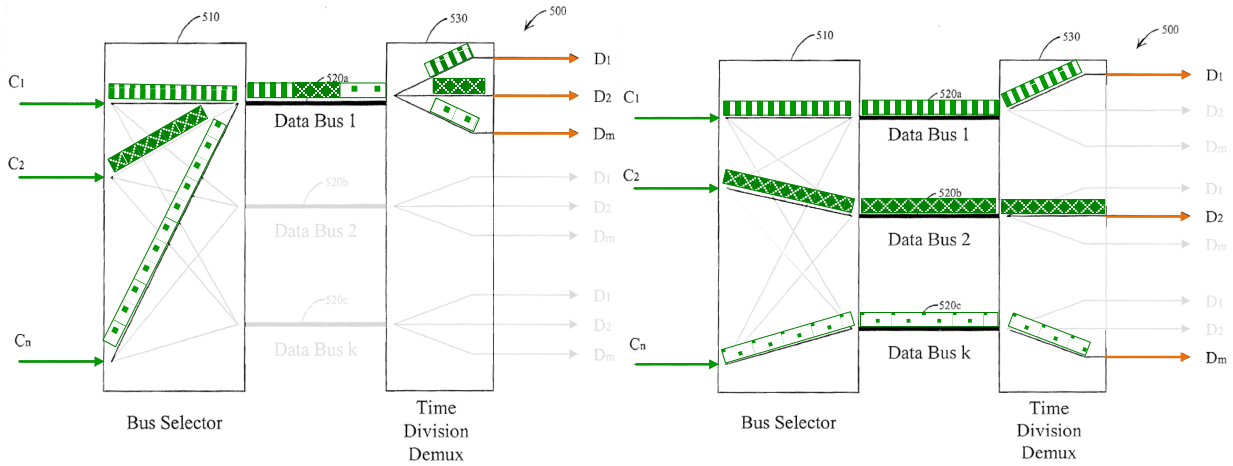

Ex. 1013, Fig. 5 (annotated)

156. Zhang teaches that "[i]n operation, digital selector 500 digitally selects one or more RF channels D1 to Dm from the digital RF channels C1 to Cn and then sends them to appropriate demodulators or output ports (not shown) through different data buses (not shown)." Ex.1013 [0039]. A POSITA would have understood that Zhang's digital selector 500 (240 in Figure 2) is configured to output the target RF channels C1 to Cn via one of the Data Buses 1 to k using time division multiplexing (see above on the left) or via multiple parallel Data Buses 1 to k (see above on the right). Thus, it is my opinion that a POSITA would have understood that Zhang's demultiplexer 230 (alone or with part of digital selector 500 (240))

configured to output the target RF channels C_1 to C_n via a single bus using time division multiplexing (as shown above on the left) teaches a digital front end configured to output the digital datastream "via a serial interface" as recited in claim 2, and that Zhang's demultiplexer 230 (alone or with part of digital selector 500 (240)) configured to output the target RF channels C_1 to C_n via multiple buses, one per selected channel (as shown above on the right), teaches a digital front end configured to output the digital datastream "via a parallel interface" as recited in claim 3. Ex. 1013, [0038]-[0039]. A POSITA would have understood that Zhang's two scenarios use a "serial interface" and "parallel interface" as those as those terms were known in the art. As I further explain below, this understanding is supported by basic text books and technical papers which show that these two interfaces were the standard options for outputting data in standard integrated circuit buses. Ex. 1014, 30:31-42, 31:15-22; Ex. 1016, at 17-19, 53-54; Ex. 1017, at 354-355.

157. With respect to the general understanding of a POSITA regarding the standard options for outputting data, "Digital Integrated Circuits: A Design Perspective" published in 1996 ("Rabaey") is a textbook focused on the design of CMOS digital integrated circuits, which is the same technology Zhang's digital circuitry is implemented in. Ex. 1016, 31-34, 48-51, 80; Ex. 1013, [0044], [0048]. As Rabaey discusses, a digital integrated circuit represents data as binary units (referred to as "bits") in the form of electrical signals on wires (e.g., high and low

voltages for binary values "1" and "0" respectively). Ex. 1016, at 31-34, *see also* 48-51, 80 (Figure 6-25).

158. To output multiple bits (e.g., from multiple channels), the circuit can either transmit the bits over multiple separate wires, one wire for each bit, which was known as a "parallel interface," or the circuit can transmit the set of bits one at a time as sequential pulses over a single wire, according to a fixed sequence, which was known as a "serial interface." Ex. 1016, at 79-80 (Figure 6-25).

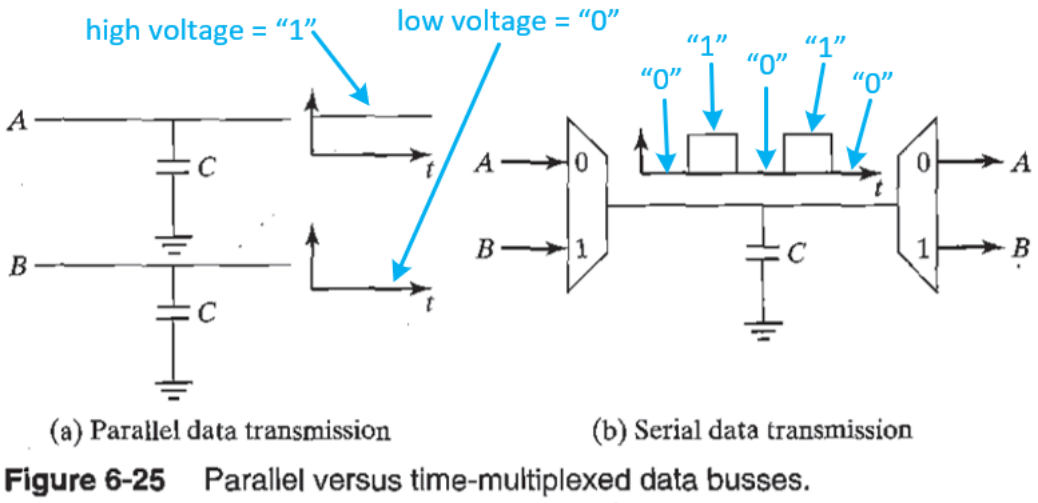

Figure 6-25 Parallel versus time-multiplexed data busses.

Ex. 1016, at 80 (Figure 6-25) (annotated)

159. As shown in Zhang's annotated Figure 5 above, Zhang implements serial and parallel interfaces as those terms are described in Rabaey and as were known in the art. Thus, it is my opinion that Zhang discloses claims 2 and 3.

160. In addition, where the combination of demultiplexer 230 (**purple**) and all of digital selector 240 (**purple**) is the "DFE" and selected RF channels D_1 to D_m (**orange**) form the "digital datastream" (*see* Section 9.1.1, *supra*), Zhang discloses

claim 3 because digital selector 240 (**purple**) outputs channels D_1 to D_m (**orange**) via parallel lines (e.g., buses) to respective demodulators 250(1)-250(m) (**brown**), as shown in Figure 2 below. Ex. 1013, [0029], [0042], claims 2-4, Figs. 2, 6.

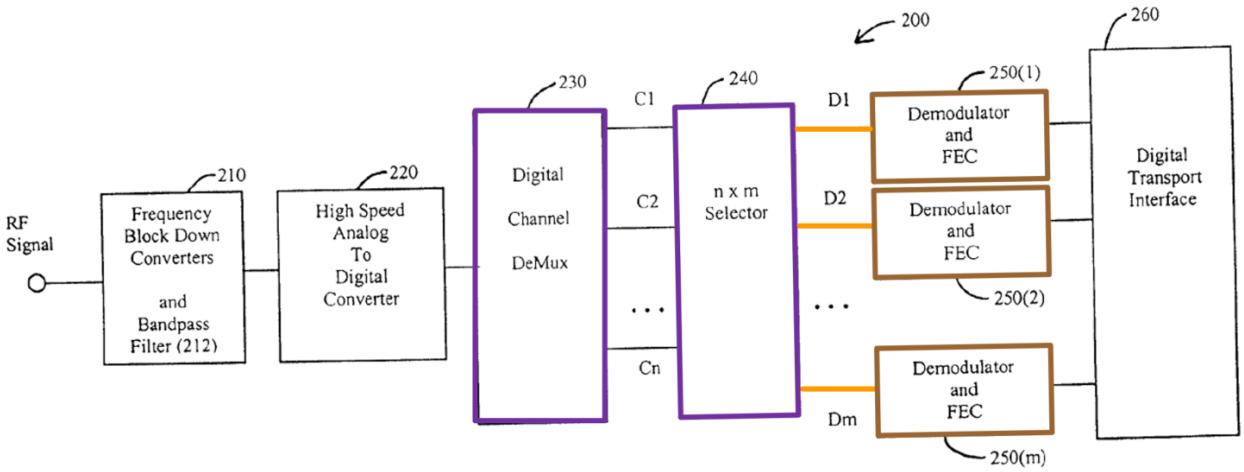

Ex. 1013, Fig. 2 (annotated)

161. To the extent Patent Owner argues that Zhang does not disclose serial and parallel interfaces, implementing Zhang's digital circuitry to output the selected channels (either the RF channels C_1 to C_n or the RF channels D_1 to D_m) to demodulators 250 (either to an individual demodulator or to shared demodulators) via either option would have been obvious as one of two design choices that were well known and used by POSITAs in integrated circuits designs at the time. Ex. 1014, 30:31-42 (teaching serial interface), 31:15-22; Ex. 1016, at 79-80 (teaching both serial and parallel interfaces); Ex. 1017, at 354-355. Thus, a POSITA implementing the Zhang circuit, for example in CMOS, would have in the design process of implementing the output for the digital data stream chosen a serial

interface and/or a parallel interface, both options being typical (and with known tradeoffs – space and cost vs. time) and thus obvious to try. See Section 8.4 above. As the ’275 patent concedes, outputting a digital data steam via serial (claim 2) or parallel (claim 3) interfaces were “commonly known methods,” i.e., Applicant Admitted Prior Art (AAPA). Ex. 1001, 7:16-20. For the same reasons, implementing serial and parallel interfaces would have been well within the POSITA’s skillset, and thus, a POSITA selecting either interface would have had a high expectation of success leading to a predictable result.

9.1.3. Dependent Claim 5

[5] “The method of claim 1, wherein the extracted information is stored for use in a digital video recorder (DVR).”

162. It is my opinion that Zhang discloses “The method of claim 1, wherein the extracted information is stored for use in a digital video recorder (DVR),” as recited in claim 5.

163. Zhang teaches that the demultiplexer 230 and digital selector 240 form a front end for a personal video recorder (PVR): “Systems using the invention are enabled to perform advanced wide-band front-ends for digital set-top boxes, **PVR**s, home gateways and home media centers. FIG. 8 is a simplified high-level block diagram of a system 800 using a multi-channel demodulator 810, according to an embodiment of the present invention. System 800 of FIG. 8 is a set-top

box/**PVR**/home media server. Systems using the invention are also enabled to support the widest simultaneous reception of entertai[nm]ent and information content while providing a wide-band return channel for 2-way communications in cable and satellite services." Ex. 1013, [0045]. This means that the information such as video content extracted from the RF channels D_1 to D_m by demodulators 250 (*see* Section 9.1.1, *supra*) is for use in a PVR (the claimed "digital video recorder (DVR)") which a POSITA would have understood stores such data for playback. Ex. 1013, [0045], Fig. 2 and Fig. 8.

164. A POSITA would have understood that "PVR" stands for "personal video recorder," which is another name for "DVR" or "digital video recorder" for recording content received by a STB. See, e.g., Ex. 1051, [0018] ("A PVR is also referred to as [] digital video recorder (DVR)"). That is, a POSITA would have understood that PVR and DVR are generally used interchangeably, although PVR might have also been considered by some to be a type of DVR that is for a person. To the extent there is a difference between a PVR and DVR, it would have been obvious to replace Zhang's PVR with a DVR because of the interchangeable use and overlapping meaning of PVR and DVR. Ex. 1051, [0018]. A POSITA would have been motivated to do this because a POSITA would have wanted Zhang's system to be more usable and practical (e.g., usable with various models of DVRs owned by various subscribers), and thus would not have limited the application of Zhang to

PVR instead of "the widest scope". Ex. 1013, [0045], [0048] ("intended to be accorded the widest scope"). And, a POSITA would have had a reasonable expectation of success because it is a simple substitution of one known element for another that performs the same video recording function. *Id.* Thus, it is my opinion that Zhang discloses and teaches claim 5.

9.1.4. Dependent Claim 7

[7] "The method of claim 1, wherein the plurality of desired channels comprises at least one television channel."

165. It is my opinion that Zhang discloses "[t]he method of claim 1, wherein the plurality of desired channels comprises at least one television channel," as recited in claim 7.

166. Zhang describes that the down-converter 210 receives one or more multi-channel analog RF signals "which can be sourced by a variety of systems such as satellite systems, terrestrial TV systems, cable systems, etc." Ex. 1013, [0023], [0041]. This indicates that the multi-channel RF input signals would have been television signals. In other words, multiple channels within the RF input signals would have been television channels. *Id*. A POSITA would have understood that Zhang's system is designed "to handle multi-channel satellite, terrestrial TV (NTSC, ATSC, DVB-T, etc), and cable downstream signals." Ex. 1013, [0029]. Thus, Zhang discloses embodiments or scenarios in which the channels (e.g., the target channels

C_1 to C_n) of Zhang's multi-channel analog RF signal are satellite broadcast channels, television broadcast channels, cable broadcast channels, etc. *Id*.

167. As mentioned with respect to Element [1B], the '275 patent describes "desired" channels as those that are extracted from the RF input signals and sent to a demodulator and "undesired" channels as those that are filtered out by the system. Ex. 1001, Abstract, 6:8-13, 6:59-62, 7:16-25. Thus, desired channels and undesired channels are both part of the RF input signals. Just like the '275 patent, Zhang's multi-channel analog RF signal comprises multiple RF carrier signals that include a plurality of desired television channels selected by a subscriber (either the target RF channels C_1 to C_n or the selected RF channels D_1 to D_m) and a plurality of undesired television channels to be filtered out (either the unwanted channels that were not extracted from the input RF signal for C_1 to C_n or the channels of C_1 to C_n that were not selected among D_1 to D_m). Ex. 1013, [0024], [0025], [0026], [0028], [0032], claims 2, 4, 34, 36, 37.

168. Zhang's target RF channels C_1 to C_n and Zhang's selected RF channels D_1 to D_m (each set being the claimed "desired channels") (Section 9.1.1.b, *supra*) both comprise one or more television channels, in the cases where Zhang's multi-channel analog RF signal is sourced by "terrestrial TV systems." Ex. 1013, [0023], [0029], [0041]. In other words, when Zhang's multi-channel analog RF input signal is from a TV system, then a POSITA would have understood that Zhang's set of

target channels C1 to CN and set of selected channels D1 to Dm include "at least one television channel" as claimed in claim 7 because both sets of channels are part of the multi-channel RF input signal. Thus, it is my opinion that Zhang discloses claim 7.

9.1.5. Dependent Claim 8

[8] "The method of claim 1, wherein the plurality of undesired channels comprises at least one television channel."

169. It is my opinion that Zhang discloses "[t]he method of claim 1, wherein the plurality of undesired channels comprises at least one television channel," as recited in claim 8.

170. Zhang describes that the down-converter 210 receives one or more multi-channel analog RF signals "which can be sourced by a variety of systems such as satellite systems, terrestrial TV systems, cable systems, etc." Ex. 1013, [0023], [0041]. This indicates that the multi-channel RF input signals would have been television signals. In other words, multiple channels within the RF input signals would have been television channels. *Id*. A POSITA would have understood that Zhang's system is designed "to handle multi-channel satellite, terrestrial TV (NTSC, ATSC, DVB-T, etc), and cable downstream signals." Ex. 1013, [0029]. Thus, Zhang discloses embodiments or scenarios in which the channels (e.g., the target channels

C_1 to C_n) of Zhang's multi-channel analog RF signal are satellite broadcast channels, television broadcast channels, cable broadcast channels, etc. *Id*.

171. As mentioned with respect to Element [1B], the '275 patent describes "desired" channels as those that are extracted from the RF input signals and sent to a demodulator and "undesired" channels as those that are filtered out by the system. Ex. 1001, Abstract, 6:8-13, 6:59-62, 7:16-25. Thus, desired channels and undesired channels are both part of the RF input signals. Just like the '275 patent, Zhang's multi-channel analog RF signal comprises multiple RF carrier signals that include a plurality of desired television channels selected by a subscriber (either the target RF channels C_1 to C_n or the selected RF channels D_1 to D_m) and a plurality of undesired television channels to be filtered out (either the unwanted channels that were not extracted from the input RF signal for C_1 to C_n or the channels of C_1 to C_n that were not selected among D_1 to D_m). Ex. 1013, [0024], [0025], [0026], [0028], [0032], claims 2, 4, 34, 36, 37.

172. Zhang's unwanted channels that were not included among C_1 to C_n and Zhang's unselected channels that were not included among D_1 to D_m (each set being the claimed "undesired channels") both comprise one or more television channels, in the cases where Zhang's multi-channel analog RF signal is sourced by "terrestrial TV systems." Ex. 1013, [0023], [0029], [0041]. In other words, when Zhang's multi-channel analog RF input signal is from a TV system, then a POSITA would have

understood that Zhang's set of unwanted channels (channels not targeted) and set of unselected channels (channels not selected for D1 to Dm) include "at least one television channel" as claimed in claim 8 because both sets of channels are part of the multi-channel RF input signal. Thus, it is my opinion that Zhang discloses claim 8.

9.1.6. Dependent Claim 9

[9] "The method of claim 1, wherein the broadcast channels comprise satellite broadcast channels."

173. It is my opinion that Zhang discloses "[t]he method of claim 1, wherein the broadcast channels comprise satellite broadcast channels," as recited in claim 9.

174. As explained with respect to Element [1B], Zhang discloses the multi-channel RF input signal comprising broadcast channels with content to be broadcast to subscribers. See Section 9.1.1.b above. Zhang further describes that the multi-channel analog RF signals "can be sourced by a variety of systems such as satellite systems." Ex. 1013, [0023]. This indicates that multi-channel RF input signals would have been satellite broadcast signals. In other words, broadcast channels within the RF input signals would have been or comprise satellite broadcast channels. *Id*. A POSITA would have understood that Zhang's system is designed "to handle multi-channel satellite, terrestrial TV (NTSC, ATSC, DVB-T, etc), and cable downstream signals." Ex. 1013, [0029]. Thus, Zhang discloses embodiments or scenarios in

which the RF channels within the multi-channel analog RF signal (claimed "broadcast channels") comprise "satellite broadcast channels" as claimed in claim 9. Ex. 1013, [0023], [0029], [0041]. Thus, it is my opinion that Zhang discloses claim 9.

9.1.7. Dependent Claim 10

[10] "The method of claim 1, wherein the broadcast channels comprise cable broadcast channels."

175. It is my opinion that Zhang discloses "[t]he method of claim 1, wherein the broadcast channels comprise cable broadcast channels," as recited in claim 10.

176. As explained with respect to Element [1B], Zhang discloses the multi-channel RF input signal comprising broadcast channels with content to be broadcast to subscribers. See Section 9.1.1.b above. Zhang further describes that the multi-channel analog RF signals "can be sourced by a variety of systems such as [] cable systems." Ex. 1013, [0023]. This indicates that multi-channel RF input signals would have been cable broadcast signals. In other words, broadcast channels within the RF input signals would have been or comprise cable broadcast channels. *Id*. A POSITA would have understood that Zhang's system is designed "to handle multi-channel satellite, terrestrial TV (NTSC, ATSC, DVB-T, etc), and cable downstream signals." Ex. 1013, [0029]. Thus, Zhang discloses embodiments or scenarios in which the RF channels within the multi-channel analog RF signal (claimed "broadcast channels")

comprise "cable broadcast channels" as claimed in claim 10. Ex. 1013, [0023], [0029], [0041]. Thus, it is my opinion that Zhang discloses claim 10.

9.1.8. Independent Claim 11

177. The elements of claim 11 appear in the Claims Listing Appendix, labeled as Elements [11A]-[11E]. Claim 11 is a device claim directed to substantially identical subject matter as method claim 1. Specifically, Claim 11 recites a television receiver device with the same components, and the components perform the same functions as recited in claim 1. Thus, claim 11 is disclosed and taught by Zhang, for the same reasons discussed above with respect to claim 1. See my explanation above at Sections 9.1.1.a through 9.1.1.f.

a. [11A]: "A television receiver device, comprising:"

178. It is my opinion that Zhang discloses "[a] television receiver device, comprising:" as claimed.

179. Preamble [11A] is substantially identical to Preamble [1A]. The only difference of Preamble [11A] compared to Preamble [1A] is the addition of "device" and removal of "a method for operating." Thus, it is my opinion that Preamble [11A] is disclosed and taught by Zhang for the same reasons set forth in connection with Preamble [1A]. See my explanation at Section 9.1.1.a. Specifically, Zhang's demodulation circuit (e.g., multi-channel demodulator 200), or the "wide-band

receiver" that uses it, is the claimed "television receiver device." Ex. 1013, Abstract, [0004], [0023], [0025], [0041], [0044]-[0045], [0047].

b. [11B]: "an input terminal operable to receive an input signal comprising broadcast channels, the broadcast channels comprising a plurality of desired channels and a plurality of undesired channels, wherein the plurality of desired channels are non-contiguous;"

180. It is my opinion that Zhang discloses "an input terminal operable to receive an input signal comprising broadcast channels, the broadcast channels comprising a plurality of desired channels and a plurality of undesired channels, wherein the plurality of desired channels are non-contiguous," as claimed.

181. Element [11B] is substantially identical to Element [1B]. The only difference is at the beginning, with Element [11B] citing "an input terminal operable to receive" and Element [1B] citing "receiving, by an input terminal." As such, Element [11B] merely recasts the performed step of Element [1B] as a required functionality. Thus, it is my opinion that Element [11B] is disclosed and taught by Zhang for the same reasons set forth in connection with Element [1B]. See my explanation at Section 9.1.1.b. In particular, Zhang's demodulation circuit comprises an input terminal (the claimed "input terminal") for receiving the RF signal (the claimed "input signal"). Ex. 1013, Fig. 2.

c. [11C]: "a radio front end, coupled to the input terminal, operable to process the input signal;"

182. It is my opinion that Zhang discloses "a radio front end, coupled to the input terminal, operable to process the input signal," as claimed.

183. Element [11C] is substantially identical to Element [1C]. Element [11C] merely recasts the performed step of Element [1C] as a required functionality. Thus, it is my opinion that Element [11C] is disclosed and taught by Zhang for the same reasons set forth in connection with Element [1C]. See my explanation at Section 9.1.1.c. In particular, Zhang's demodulation circuit comprises a down-converter 210 (the claimed "radio front end") for processing the RF signal. Ex. 1013, [0023], [0025], [0026], Fig. 2.

d. [11D]: "an analog-to-digital converter (ADC), coupled to the radio front end, operable to digitize the processed input signal to generate a digitized signal; "

184. It is my opinion that Zhang discloses "an analog-to-digital converter (ADC), coupled to the radio front end, operable to digitize the processed input signal to generate a digitized signal," as claimed.

185. Element [11D] is substantially identical to Element [1D]. Element [11D] merely recasts the performed step of Element [1D] as a required functionality. Thus, it is my opinion that Element [11D] is disclosed and taught by Zhang for the same reasons set forth in connection with Element [1D]. See my explanation at Section 9.1.1.d. In particular, Zhang's demodulation circuit comprises an ADC 220

(the claimed "ADC") for digitizing the processed RF signal. Ex. 1013, [0027], [0031], [0034], Fig. 2.

e. [11E]: "a digital frontend (DFE), coupled to the ADC, operable to select the plurality of desired channels from the digitized signal and"

186. It is my opinion that Zhang discloses "a digital frontend (DFE), coupled to the ADC, operable to select the plurality of desired channels from the digitized signal and" as claimed.

187. Element [11E] is substantially identical to Element [1E]. Element [11E] merely recasts the performed step of Element [1E] as a required functionality. Thus, it is my opinion that Element [11E] is disclosed and taught by Zhang for the same reasons set forth in connection with Element [1E]. See my explanation at Section 9.1.1.e. In particular, Zhang's demodulation circuit comprises the demultiplexer 230 in combination with all or part of the digital selector 240 (the claimed "digital frontend (DFE)") for selecting a plurality of desired channels from the digitized signal. Ex. 1013, [0028]-[0032], [0042], Fig. 2.

f. [11F]: "output the selected plurality of desired channels to at least one demodulator as a digital datastream, wherein the demodulator is operable to extract information encoded in the digital datastream."

188. It is my opinion that Zhang discloses the "digital frontend (DFE)…operable to…output the selected plurality of desired channels to at least one

demodulator as a digital datastream, wherein the demodulator is operable to extract information encoded in the digital datastream," as claimed.

189. Element [11F] is substantially identical to Element [1F]. Element [11F] merely recasts the performed step of Element [1F] as a required functionality. Thus, it is my opinion that Element [11F] is disclosed and taught by Zhang for the same reasons set forth in connection with Element [1F]. See my explanation at Section 9.1.1.f. In particular, Zhang's demodulation circuit comprises the demultiplexer 230 in combination with all or part of the digital selector 240 (the claimed "digital frontend (DFE)") for outputting a plurality of selected channels to one or more demodulators as a digital datastream. Ex. 1013, [0028]-[0032], [0042], claim 2, Fig. 2.

9.1.9. Dependent Claims 12 and 13

[12] "The television receiver device of claim 11, wherein the DFE is operable to output the digital datastream via a serial interface."

[13] "The television receiver device of claim 11, wherein the DFE is operable to output the digital datastream via a parallel interface."

190. It is my opinion that Zhang discloses "[t]he television receiver device of claim 11, wherein the DFE is operable to output the digital datastream via a serial interface," as recited in claim 12, and "[t]he television receiver device of claim 11, wherein the DFE is operable to output the digital datastream via a parallel interface," as recited in claim 13.

191. Claim 12 is substantially identical to claim 2. The only difference between claims 12 and 2 is that claim 12 depends from claim 11 and that claim 12 adds "operable to". Thus, it is my opinion that claim 12 is disclosed and taught by Zhang for the same reasons set forth in connection with claim 2. See my explanation at Section 9.1.2.

192. Claim 13 is substantially identical to claim 3. The only difference between claims 13 and 3 is that claim 13 depends from claim 11 and that claim 13 adds "operable to". Thus, it is my opinion that claim 13 is disclosed and taught by Zhang for the same reasons set forth in connection with claim 3. See my explanation at Section 9.1.2.

9.1.10. Dependent Claim 15

[15] "The television receiver device of claim 11, wherein the extracted information is stored for use in a digital video recorder (DVR)."

193. It is my opinion that Zhang discloses "[t]he television receiver device of claim 11, wherein the extracted information is stored for use in a digital video recorder (DVR)," as recited in claim 15.

194. Claim 15 is substantially identical to claim 5. The only difference between claims 15 and 5 is that claim 15 depends from claim 11. The body of the claim is the same. Thus, it is my opinion that claim 15 is disclosed and taught by

Zhang for the same reasons set forth in connection with claim 5. See my explanation at Section 9.1.3.

9.1.11. Dependent Claim 17

[17] "The television receiver device of claim 11, wherein the plurality of desired channels comprises at least one television channel."

195. It is my opinion that Zhang discloses "[t]he television receiver device of claim 11, wherein the plurality of desired channels comprises at least one television channel," as recited in claim 17.

196. Claim 17 is substantially identical to claim 7. The only difference between claims 17 and 7 is that claim 17 depends from claim 11. The body of the claim is the same. Thus, it is my opinion that claim 17 is disclosed and taught by Zhang for the same reasons set forth in connection with claim 7. See my explanation at Section 9.1.4.

9.1.12. Dependent Claim 18

[18] "The television receiver device of claim 11, wherein the plurality of undesired channels comprises at least one television channel."

197. It is my opinion that Zhang discloses "[t]he television receiver device of claim 11, wherein the plurality of undesired channels comprises at least one television channel," as recited in claim 18.

198. Claim 18 is substantially identical to claim 8. The only difference between claims 18 and 8 is that claim 18 depends from claim 11. The body of the claim is the same. Thus, it is my opinion that claim 18 is disclosed and taught by Zhang for the same reasons set forth in connection with claim 8. See my explanation at Section 9.1.5.

9.1.13. Dependent Claim 19

[19] "The television receiver device of claim 11, wherein the broadcast channels comprise satellite broadcast channels."

199. It is my opinion that Zhang discloses "[t]he television receiver device of claim 11, wherein the broadcast channels comprise satellite broadcast channels," as recited in claim 19.

200. Claim 19 is substantially identical to claim 9. The only difference between claims 19 and 9 is that claim 19 depends from claim 11. The body of the claim is the same. Thus, it is my opinion that claim 19 is disclosed and taught by Zhang for the same reasons set forth in connection with claim 9. See my explanation at Section 9.1.6.

9.1.14. Dependent Claim 20

[20] "The television receiver device of claim 11, wherein the broadcast channels comprise cable broadcast channels."

201. It is my opinion that Zhang discloses "[t]he television receiver device of claim 11, wherein the broadcast channels comprise cable broadcast channels," as recited in claim 20.

202. Claim 20 is substantially identical to claim 10. The only difference between claims 20 and 10 is that claim 20 depends from claim 11. The body of the claim is the same. Thus, it is my opinion that claim 20 is disclosed and taught by Zhang for the same reasons set forth in connection with claim 10. See my explanation at Section 9.1.7.

9.2. Zhang in View of Pandey Renders Claims 2, 3, 12, and 13 Obvious (Ground C)

203. In the following, I show how Zhang in view of Pandey renders claims 2, 3, 12, and 13 obvious. To help illustrate how the disclosures of these references map to the claim limitations, I have color coded some of my remarks and some figures in the noted art below.

9.2.1. Dependent Claims 2 and 3

Claim 2: "The method of claim 1, wherein the DFE outputs the digital datastream via a serial interface."

Claim 3: "The method of claim 1, wherein the DFE outputs the digital datastream via a parallel interface."

204. As described in Section 9.1.2, Zhang's digital selector implements both the serial and parallel interfaces of claims 2 and 3 to output a digital data stream of

the selected channels, and to the extent it doesn't, such implementation would have been obvious based on Zhang in view of a POSITA's background knowledge (including the '275 Patent's admitted prior art). *See* Section 9.1.2, *supra*; Ex. 1013, [0038]-[0039]; Ex. 1001, 7:16-20; Ex. 1014, 30:31-42, 31:15-22; Ex. 1016, 79-80; Ex. 1017, 354-355.

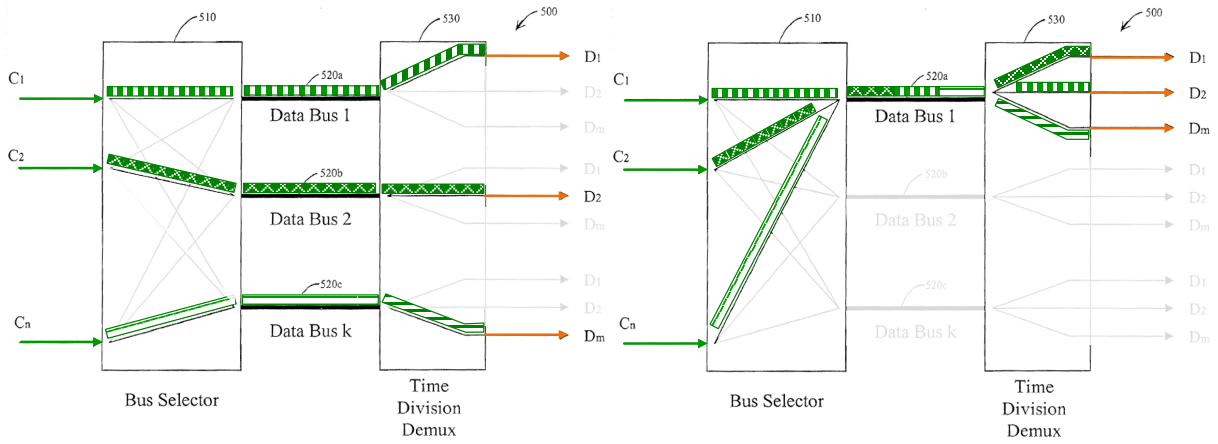

Ex. 1013, Fig. 5 (annotated)

205. In addition, Pandey teaches creating specific serial and parallel interfaces using a computer aided technique for implementing a digital circuit design (e.g., such as Zhang's digital circuitry) on a field programmable gate array (FPGA) chip or application-specific integrated circuit (ASIC) chip. Ex. 1014, Abstract, 1:15-55, 2:4-12; Ex. 1013, Abstract ("A method and circuitry for implementing digital multi-channel demodulation circuits."). The process involves partitioning functional blocks (such as Zhang's channel demultiplexer 230, digital selector 240, and demodulators 250) to different regions of an integrated circuit chip (e.g., 301, 303, 305, 307) and assigning wire traces (e.g., 351, 353, 355, 357) to interconnect

the partitioned blocks. Ex. 1014, 1:56-65, 2:6-12, 2:64-3:5, 6:10-15, 11:6-19, 13:33-14:7; Ex. 1013, Fig. 2 (showing channel demultiplexer 230, digital selector 240, and demodulators 250 as functional blocks).

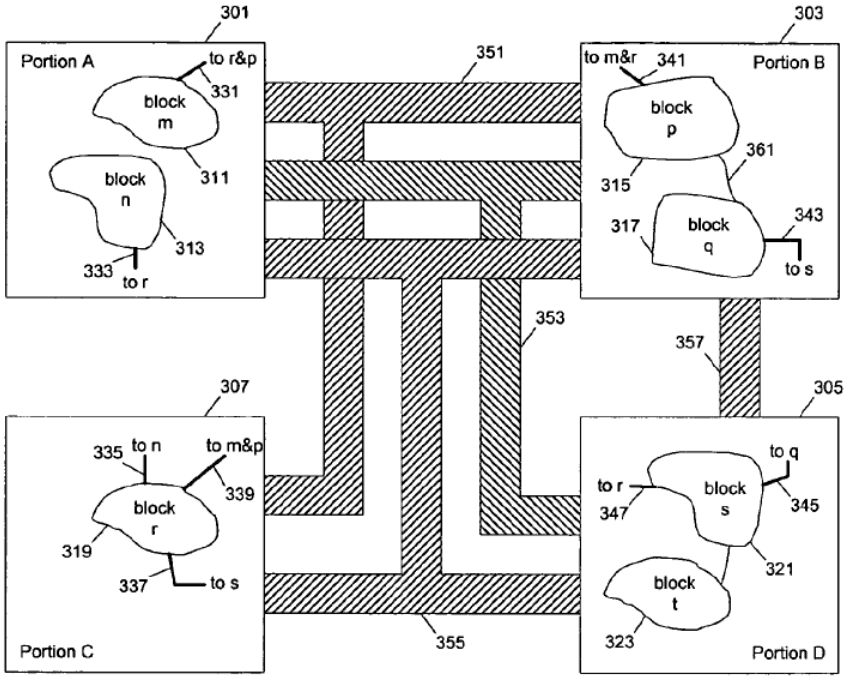

Ex. 1014, Fig. 3

206. Pandey recognizes that the number of signals (nets) between function blocks in different partitions may exceed the number of traces (physical wires) available inside a chip, and that in such cases, multiple signals must be time-multiplexed (i.e. transmitted serially) over a single trace. Ex. 1014, 10:24-53, 10:58-11:5, 29:44-58, 30:31-42. For example, as shown below, a plurality of parallel signals from logic block A 1613 in a first partition are multiplexed by 1615 onto a single trace 1605, and then demultiplexed back into parallel signals input to logic block B 1623 in a second partition. Ex. 1014, 30:31-52, Fig. 37.

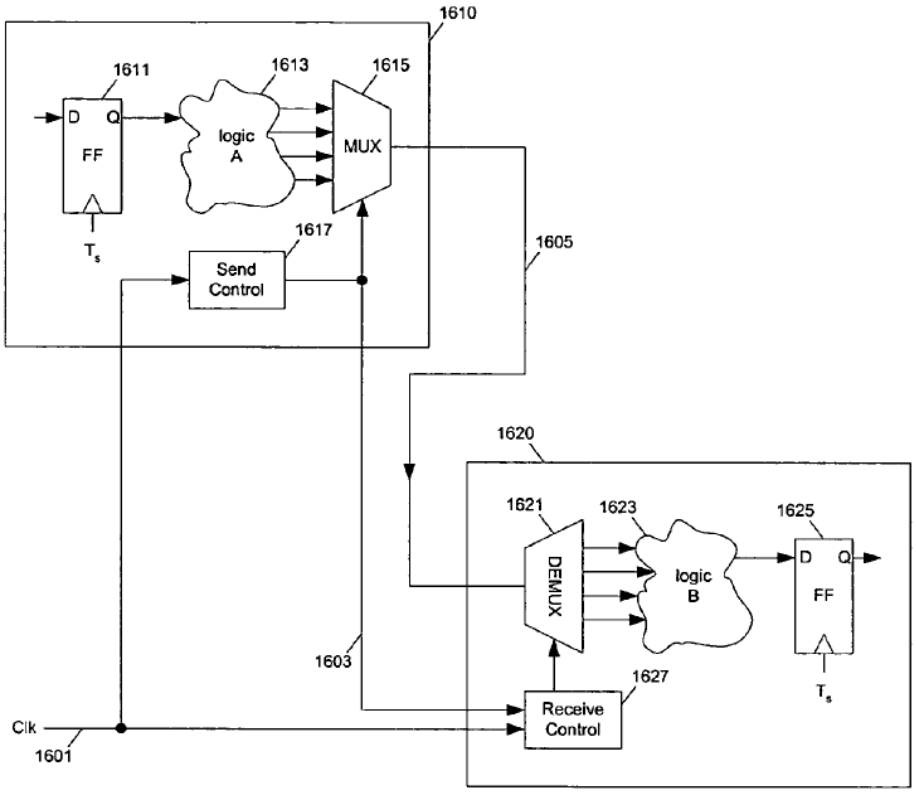

Ex. 1014, Fig. 37

207. Pandey's process optimizes the partitioning of blocks based on reducing the multiplexing ratio of wires to signals required between partitions. Ex. 1014, 5:50-53, 6:11-15, 6:44-53, 7:13-19, 29:44-30:9, 30:53-31:12, 31:56-63, Figs. 38-39. Thus, depending upon the partitioning of the circuit design within finite area and finite interconnection of a chip, Pandey's optimization will in some layouts result in signals being grouped and time multiplexed through a serial interface between partitions, and in other layouts result in signals having individual dedicated traces with no multiplexing, which is a parallel interface. Ex. 1014, 31:20-22, 32:12-15. Thus, Pandey teaches both serial and parallel interfaces for groups of signals between digital functional blocks, with the selection between the two interfaces

being dependent on its optimization scheme for implementing a digital design and dependent upon the area and interconnect resources of a particular integrated chip. Ex. 1014, 11:6-19, 13:33-55, 31:20-22, 32:12-15, Figs. 2-3.

208. It is my opinion that it would have been obvious to a POSITA to combine Zhang with Pandey to arrive at multiple combinations that teach a serial interface in at least one case and a parallel interface in at least another case. For example, in one combination of Zhang and Pandey, a POSITA would have implemented Zhang's demultiplexer 230 (alone or with the digital selector 240) such that the RF channels C_1 to C_n (or alternatively the RF channels D_1 to D_m) are outputted as a digital datastream to demodulators 250 via a serial interface (like Pandey's single trace 1605). In particular, a POSITA would have used a single wire or data bus between Zhang's bus selector 510 and demodulators 250 to transfer channels C_1 to C_n (or channels D_1 to D_m which may be fewer channels than C_1 to C_n if the bus selector 510 does not select all of C_1 to C_n). This example combination teaches claim 2 including the "serial interface" limitation. In another example combination of Zhang and Pandey, a POSITA would have implemented Zhang's demultiplexer 230 (alone or with the digital selector 240) such that the RF channels C_1 to C_n (or alternatively the RF channels D_1 to D_m) are outputted as a digital datastream to demodulators 250 via a parallel interface (like Pandey's parallel traces). In particular, a POSITA would have used multiple wires or data buses

between Zhang's bus selector 510 and demodulators 250 to transfer channels C_1 to C_n (or channels D_1 to D_m which may be fewer channels than C_1 to C_n if the bus selector 510 does not select all of C_1 to C_n). This example combination teaches claim 3, including the "parallel interface" limitation.

209. It is also my opinion that a POSITA would have been motivated to apply Pandey's optimization for dedicated (i.e., parallel) and/or time-multiplexed (i.e., serial) interconnection to the interconnection between Zhang's demultiplexer 230, digital selector 240, and/or demodulators 250. A POSITA would have been motivated to do this because Zhang calls for implementing them on a chip and they need to be connected for Zhang's system to function properly and because the serial and parallel interfaces in Zhang were useful, well-known ways of making these connections. The demodulators 250 cannot perform their intended function of demodulating the selected RF channels if they do not receive the channel data from the demultiplexer 230 and digital selector 240. A POSITA would have also understood that Zhang teaches optimizing the real estate needed for implementing the digital portion of its system on a single chip, and would have understood that the process described in Pandey would have been beneficial in this implementation. Ex. 1013, [0029], [0037], [0044], [0047]-[0048]; Ex. 1014, 1:20-2:12, 6:10-15. It would have been obvious for a POSITA to seek ways to reduce the area needed for implementing Zhang on a chip and to look to Pandey's optimization process. A

POSITA would have been taught by Pandey that either serial or parallel interfaces are used for connecting digital components in order to leverage their respective benefits and would have found it obvious to apply either type of interface to transfer the digital datastream output from Zhang's demultiplexer 230 and/or digital selector 240 to Zhang's demodulators 250. For example, in view of Pandey, a POSITA would have implemented Zhang's system to place demultiplexer 230 and selector 240 in one portion of a chip and connect them via a serial or parallel interface to demodulators 250 in another portion of the chip. This would have been done as part of the "typical floor planning operation" when designing the integrated circuit for implementing Zhang. Ex. 1014, 1:60-2:3. This would have been done to "enable one to apply divide-and-conquer techniques to simplify the design process (e.g., placement and routing)." Ex. 1014, 2:4-12. In particular, a POSITA would have been motivated to implement each approach (using a serial interface or parallel interface) to enable the POSITA to employ Pandey's cost function. A POSITA would have employed Pandey's cost function to optimize how Zhang's circuit is arranged (i.e., fitted onto) on a single chip and how to connect the circuit components (i.e., determine whether to use a serial interface or parallel interface). That is, a POSITA would have implemented the serial interface in at least one instance and the parallel interface in at least another instance and applied Pandey's cost function to each instance in pursuit of determining how to implement Zhang's circuit on a

single chip in a manner that reduces area of the circuit and therefore area of the entire chip. A POSITA would have desired to reduce the area of the circuit and/or chip to reduce the cost of the television receiver in which the chip is used. Consumer/subscriber demand for lower cost in-home electronic devices, such as television receivers, was well-known and would have been a driving factor in the POSITA's design considerations.

210. Further, Zhang teaches sending a datastream from demultiplexer 230 and/or digital selector 240 to demodulators 250, and Pandey discloses parallel and serial interconnections in an integrated circuit chip. Ex. 1013, [0028]-[0032], Fig. 2; Ex. 1014, 11:6-19, 13:33-55, 31:20-22, 32:12-15, Figs. 2-3. Pandey's process for implementing circuit designs with parallel and serial interfaces has been a known method. Ex. 1014, Abstract, 1:15-60, 2:4-12, 2:64-3:5, 6:10-15, 11:6-19, 13:33-14:7. It would have been predictable for a POSITA to use parallel and/or serial interfaces taught by Pandey in Zhang's circuit design, for sending Zhang's datastream from demultiplexer 230 and/or digital selector 240 to demodulators 250, using the known method. The combination is simply using a known technique for implementing data buses in an integrated circuit as taught in Pandey, to improve a similar integrated circuit having data buses for outputting digital data streams as taught in Zhang, in the same way Pandey teaches to apply its technique.

211. It would have been predictable for a POSITA to combine Zhang and Pandey in the ways discussed above because Pandey's process considers available resources in terms of chip area and trace availability and is optimized to fit a target design (e.g., Zhang's digital circuit) within those resources. Ex. 1014, 31:15-22, 32:7-15. Where trace resources for a particular integrated circuit are insufficient, Pandey's process will predictably time-multiplex signals onto a single trace based on a desired multiplexer ratio, thus producing to a serial interface to Zhang's demodulators. *Id.* Likewise, where the resources are sufficient, Pandey's process will predictably make the multiplexer ratio equal to one and assign each signal to its own trace, thus producing a parallel interface to Zhang's demodulators. *Id*. Further, it is my opinion that a POSITA would have had a reasonable expectation of success in combining Zhang and Pandey, because Pandey's optimization utilized processes such as floor planning, partitioning, and wire routing that were standard and well within a POSITA's skillset. Ex. 1014, 1:20-2:38. Finally, as the Applicant Admitted Prior Art (AAPA) makes clear, a POSITA would have been familiar with implementing serial and parallel interfaces to transfer data between circuit components like Zhang's demultiplexer 230 or digital selector 240 and demodulator 250. Ex. 1001, 7:16-20.

9.2.2. Dependent Claim 12

Claim 12: "The television receiver device of claim 11, wherein the DFE is operable to output the digital datastream via a serial interface."

212. Claim 12 is substantially identical to claim 2. The only difference between claims 12 and 2 is that claim 12 depends from claim 11 and that claim 12 adds "operable to". Thus, it is my opinion that claim 12 is taught by Zhang in view of Pandey for the same reasons set forth in connection with claim 2. See my explanation at Section 9.2.1.

9.2.3. Dependent Claim 13

Claim 13: "The television receiver device of claim 11, wherein the DFE is operable to output the digital datastream via a parallel interface."

213. Claim 13 is substantially identical to claim 3. The only difference between claims 13 and 3 is that claim 13 depends from claim 11 and that claim 13 adds "operable to". Thus, it is my opinion that claim 13 is taught by Zhang in view of Pandey for the same reasons set forth in connection with claim 3. See my explanation at Section 9.2.1.

9.3. Zhang in view of Zhang '933 Renders Claims 2 and 12 Obvious (Ground D)

214. In the following, I show how Zhang in view of Zhang '933 renders claims 2 and 12 obvious. To help illustrate how the disclosures of these references

map to the claim limitations, I have color coded some of my remarks and some figures in the noted art below.

9.3.1. Dependent Claims 2 and 12

Claim 2: "The method of claim 1, wherein the DFE outputs the digital datastream via a serial interface."

Claim 12: "The television receiver device of claim 11, wherein the DFE is operable to output the digital datastream via a serial interface."

215. Zhang '933 describes a demodulation engine that processes digital data from selected RF channels. Ex. 1077, [0006], [0018]. The demodulation engine operates in three operating modes: a data processing mode, a channel switching mode, and a waiting mode. Ex. 1077, [0007]. "In the data processing mode, the demodulation engine processes the channel data that is currently loaded into the demodulation engine. In the channel switching mode, the demodulation engine stores the current channel data into the data buffer and retrieves and loads channel data from another channel for processing." *Id*. In this way, one demodulation engine can process multiple RF channels, as shown in Figures 3 and 5 below. In other words, various RF channels are able to share the one demodulation engine. Ex. 1077, [0009], [0025], [0028]. This enables the demodulation engine 44 (**brown**) to process more data (and/or more channels) without having to use additional components, as processing speed increases. *Id*.

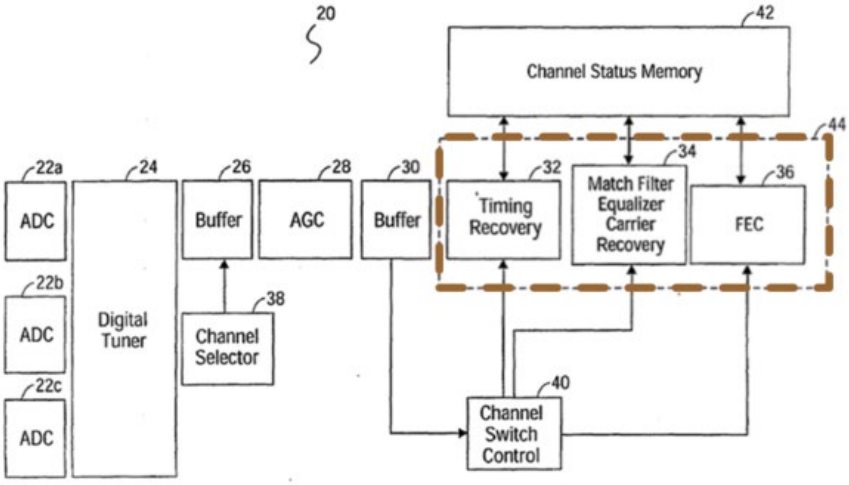

FIG. 3

Ex. 1077, Fig. 3 (annotated)

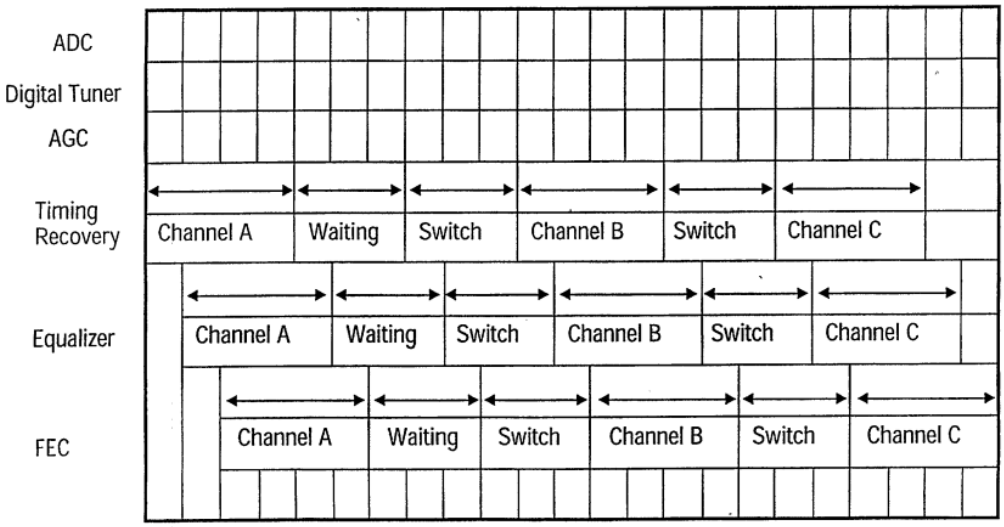

FIG. 5

Ex. 1077, Fig. 5

216. Based on the above, Zhang '933 discloses a multi-channel demodulator including a single demodulation engine 44 for processing data for multiple RF channels by processing the data for one channel at a time. Ex. 1077, Abstract, [0006]-[0007], [0009], [0018], [0022]-[0026], [0028]. "Fig. 5 is a simplified timing

diagram illustrating processing and switching of the channels by the demodulation engine 44." Ex. 1077 [0028]. A POSITA would have understood that, as illustrated by Fig. 5 (above), the demodulator input receives first Channel A digital datastream for processing by Timing Recovery 32, followed by Channel B and then C digital datastreams, in a time division multiplexed fashion via a serial interface. A POSITA would have understood that Zhang '933 teaches outputting a plurality of channels to one (i.e., a single, shared) demodulator as a digital datastream using a serial interface. A POSITA would have also understood that Zhang '933 teaches a number of serial interfaces (e.g., a single line from buffer 30 to channel switch control 40) along the path for transferring the digital data of the RF channels from the digital tuner 24 to the single demodulation engine 44. Ex. 1077, [0021]-[0026], [0028]-[0029].

217. A POSITA would have been motivated to combine Zhang and Zhang '933 to output desired channels as a datastream to a single demodulator because using a single demodulator reduces cost and improves efficiency and scalability, as taught by Zhang '933. Ex. 1077, [0003]. In implementing this combination, a POSITA would have used a serial interface to connect Zhang's digital selector 240 with a single demodulator (like Zhang '933's single demodulator) because using a serial interface reduces costs and saves space. A POSITA would have found it obvious to modify Zhang's circuit to use a single demodulator (like the single

demodulation engine 44 in Zhang ’933), instead of the multiple demodulators 250(1)-(m) in Zhang, in order to demodulate the selected RF channels D_1 to D_m. Ex. 1077, [0003]. For example, a POSITA would have found it obvious to replace Zhang’s multiple demodulators 250(1)-(m) with a single demodulator (like Zhang ’933’s demodulation engine 44) that demodulates the selected RF channels D_1 to D_m one at a time. Ex. 1077, [0009], [0017], [0025], Fig. 3. In making this combination, a POSITA would have connected Zhang’s digital selector 240 to the single demodulator via a serial interface because a serial interface is all that is needed to feed the channel data for one channel at a time to the single demodulator. Ex. 1077, [0003], [0009], [0017], [0025], Fig. 3. In other words, a POSITA would have immediately realized that a serial interface provides a well-known solution for connecting two single components like Zhang’s digital selector 240 and the single demodulator of the combination. See Section 8.3.5 above (in particular, Ex. 1076, 6:50-58 and Fig. 4 teaches a serial interface to a demodulator). Although a parallel interface is another solution, a POSITA would have understood that extra lines of the parallel interface would not be necessary for this connection and a POSITA would have realized that the extra lines take up space and therefore would have chosen a serial interface (over a parallel interface) for feeding the channel data to the single demodulator in the combination. Accordingly, in the combination of Zhang and Zhang ’933, Zhang’s demultiplexer 230 and digital selector 240 together (the

claimed "DFE") output, or are operable to output (as in claim 12), channels D_1 to D_m as a digital datastream via a serial interface to a single demodulator. Ex. 1013, [0028]-[0032], Fig. 2; Ex. 1077, [0003], [0009], [0017], [0025], Fig. 3. Thus, it is my opinion that this combination teaches claims 2 and 12.

218. A POSITA would have been motivated to carry out the combination of Zhang and Zhang '933 to use a single demodulator and serial interface for sending channel data to the single demodulator because using a single demodulator (instead of multiple demodulators) and a single-wire serial interface (instead of a multi-wire parallel interface) reduces the amount of circuitry in the system. Ex. 1077, [0003]. A POSITA would have understood that the reduced amount of circuitry leads to reduced costs, reduced use of space on the chip, and reduced power consumption. *Id*. A POSITA would have found these benefits to provide motivation for the POSITA to make the combination of Zhang and Zhang '933. I note that Zhang even provides express motivation for the POSITA to reduce the size of the circuit on the chip and to reduce power consumption and costs by reducing the number of circuit elements needed. Ex. 1013, [0008], [0026], [0037]. Zhang '933 also teaches that a single demodulator reduces costs and improves efficiency and scalability, which also provides the POSITA with motivation for the combination of Zhang and Zhang '933. Ex. 1077, [0003], [0005], [0007], [0009].

219. It is also my opinion that a POSITA would have expected success in the combination of Zhang and Zhang ’933 because it is a straightforward combination that only involves basic circuit design and implementation that would have been well-within the level of skill of a POSITA. In this regard, I note that even the ’275 patent admits that implementing a serial interface to transfer data between circuit components was “commonly known.” Ex. 1001, 7:16-20.

220. Lastly, although Zhang ’933 mentions “[t]he present invention generally relates to demodulators and, more specifically, to an improved design for a fully **parallel** multi-channel demodulator” (Ex. 1077, [0001]), a POSITA would have understood from the rest of the specification that it is about parallel processing inside the single demodulator, and there is still a serial interface going to the single demodulator.

9.4. Zhang in view of Mirabbasi Renders Claims 4 and 14 Obvious (Ground E)

221. In the following, I show how Zhang in view of Mirabbasi renders claims 4 and 14 obvious. To help illustrate how the disclosures of these references map to the claim limitations, I have color coded some of my remarks and some figures in the noted art below.

9.4.1. Dependent Claim 4

Claim 4: "The method of claim 1, wherein the ADC comprises: a first ADC configured to generate a digital in-phase signal; and a second ADC configured to generate a digital quadrature signal."

222. As I explained above with respect to Elements [1B] and [1C], Zhang's frequency block down converter 210 (**red**) receives a multi-channel *analog* RF signal from a TV system and downconverts the signal to a lower frequency range so that signal would have been digitized by the ADC 220 (**gold**) to a multi-channel *digital* RF signal. Ex. 1013, [0005], [0023]-[0025], [0029], [0041], claims 13, 27, 33. As I further explained with respect to Elements [1D] and [1E], Zhang's digitized output from the ADC 220 is input to individual complex multipliers 320 within the digital channel demultiplexer 230 (**purple**). Ex. 1013, [0030]-[0032]; *see* Sections 9.1.1.d-e, 9.1.3, *supra*. I also note that Zhang describes the circuit in its Figure 2 as being "exemplary," so a POSITA would have understood that Zhang is not limited to the particular circuit shown. Ex. 1013, [0023]. In particular, Zhang explains that the ADC 220 is for "this specific embodiment" and considers the ADC 220 to be capable of converting the entire signal band. Ex. 1013, [0027]. A POSITA would have understood that other variations of the ADC 220 would have been applicable based on this. Zhang even explains that two ADCs are typically used in satellite systems. Ex. 1013, [0025].

223. Zhang does not expressly disclose its ADC 220 having two ADCs for digitizing I and Q components, but it is my opinion that a POSITA would have found it obvious to implement the ADC 220 (**gold**) to have two ADCs for doing this based on Zhang's teachings, the POSITA's general knowledge, and Mirabbasi.

224. Mirabbasi provides a tutorial of known RF receiver architectures used for receiving digitally modulated RF signals. Ex. 1018 at 4, 11. As shown below, Mirabbasi describes a well-known "Low-IF Receiver" having the same architecture as that in Zhang, which is a RF analog frontend (**red**) that performs frequency downconversion of the analog input to an intermediate frequency (IF), followed by an analog-to-digital converter (**gold**) that digitizes the analog IF signal, followed by a digital multiplexer (**purple**) that further downconverts the digitized signal to a baseband signal, which is then processed by additional digital circuitry to demodulate the signal and recover the modulated data. Ex. 1018 at 9-10, Fig. 10; *see also* Ex. 1025 at 272, 279-280; Ex. 1034 at 54-63; Ex. 1013, [0023]-[0029], Fig. 2. The drawing below also shows an example of how a POSITA would have combined Zhang with Mirabbasi.

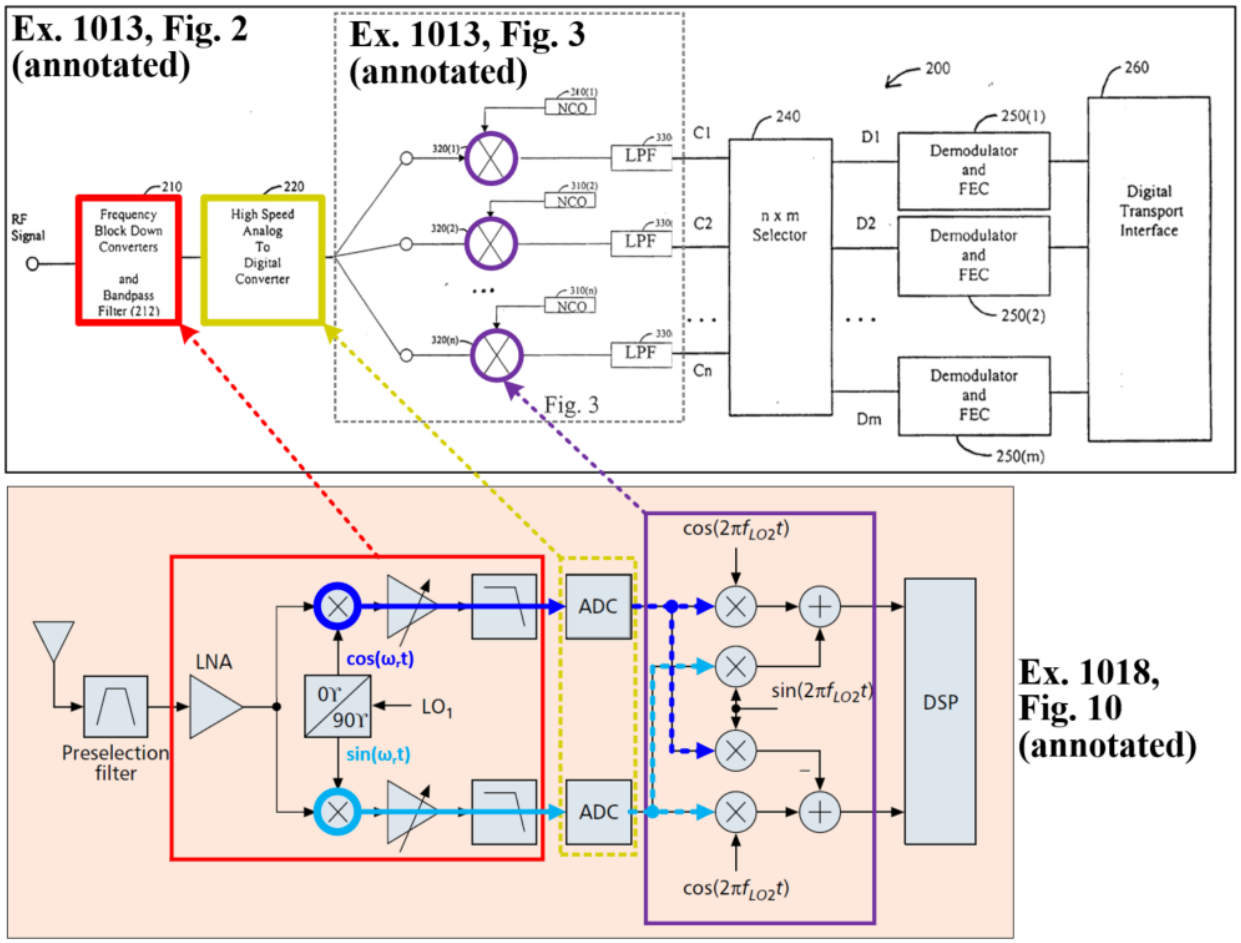

225. Mirabbasi also describes a well-known "double-conversion wideband IF receiver" having a similar structure as the "Low-IF Receiver." Ex. 1018 at 9-10, Fig. 10. Both the "double-conversion wideband IF receiver" and the "Low-IF Receiver" employ "two quadrature downconversion paths in a heterodyne receiver, all of the required information for the separation of the wanted signal from unwanted signals, such as images, is available in the two IF signals." *Id*. at 10. Mirabbasi discusses the subtle differences between the two architectures including the choice of IF and the requirements for the analog-to-digital converters. *Id*.

226. It is my opinion that Zhang in view of Mirabbasi disclose "[t]he method of claim 1, wherein the ADC comprises: a first ADC configured to generate a digital in-phase signal; and a second ADC configured to generate a digital quadrature signal," as recited in claim 4.

227. In Mirabbasi, following generation by the mixers, the in-phase (solid **dark blue line**) and quadrature (solid **light blue line**) signals are passed through amplifiers and filters respectively to first and second ADCs (**gold**) to generate a digital in-phase signal (dashed **dark blue line**) and a digital quadrature signal (dashed **light blue line**), respectively, thus disclosing the features of claim 4. Ex. 1018 at 10; Ex. 1025 at 274-275, 279-280; Ex. 1034 at 54-56, 61-63, Fig. 3.29a.

228. As shown in the comparative figure above which provides an example of the combination of Zhang and Mirabbasi, Mirabbasi's low-IF receiver illustrated in Figure 10 has the same basic architecture and performs the same functions as Zhang's receiver illustrated in Figure 2. Mirabbasi's low-IF receiver provides specific implementation details that are absent in Zhang and which a POSITA would have found advantageous to implement the Zhang receiver, for example, by implementing: 1) Zhang's frequency block downconverter 210 (**red**) using Mirabbasi's analog complex mixer (**red**) to generate in-phase and quadrature signals; 2) Zhang's wideband analog-to-digital converter (**gold**) with Mirabbasi's pair of ADCs (**gold**) for digitizing the in-phase and quadrature signals; and 3) each

of Zhang's complex multipliers (mixers) as originally described in Zhang (**purple circles**) or with Mirabbasi's complex mixer (**purple box**). As a result, the combination of Zhang and Mirabbasi has two ADCs for generating a digital in-phase signal and digital quadrature signal, respectively. Thus, the combination of Zhang and Mirabbasi results in an arrangement that teaches claim 4. I note that implementing Zhang in view of Mirabbasi to arrive at this arrangement does not change the basic underlying operations of the components in Zhang's demodulation circuit (e.g., the demodulation circuit 200 shown in Figure 2 of Zhang) that I relied on for showing the elements of claim 1. For example, even though Zhang's frequency block downconverter 210 is implemented with Mirabbasi's analog complex mixer, the modified downconverter 210 is still processing the input RF analog signal. Likewise, even though Zhang's ADC 220 is implemented with Mirabbasi's pair of ADCs, the modified ADC 220 is still digitizing the down-converted signal. Further, even where Zhang's complex multipliers 320 in its demultiplexer 230 are implemented with Mirabbasi's complex mixer, the modified demultiplexer 230 (alone or with digital selector 240) still would select channels C1 to Cn and D1 to Dm and output them to demodulators 250.

229. As described in Mirabbasi, the "low-IF" architecture (the combination of **red**, **gold**, **purple circuits**) overcomes a number of issues found in other common RF receiver designs, such as heterodyne, homodyne, and wideband IF with double-

conversion receivers. Ex. 1018 at 6-10. Such advantages of the low-IF receiver include eliminating DC offset in the baseband signals, making the sampling of the IF signal with ADCs more feasible because the IF signal is at a lower frequency, and eliminating gain and phase mismatches between the in-phase and quadrature signals because they are partially downconverted and corrected digitally. Ex. 1018 at 8, 10. Because of these advantages, a POSITA would have been motivated to use Mirabbasi's low-IF design—i.e., its analog complex mixer (**red**), pair of ADCs (**gold**), and (optionally) its complex mixer (**purple box**)—to implement Zhang's corresponding receiver components as described above to eliminate DC offset, and gain and phase mismatches. Indeed, some issues like DC offset are significant in CMOS, a technology in which the Zhang receiver is implemented, and thus a POSITA would have found Mirabbasi's low-IF architecture, which eliminates DC offset, to be particularly beneficial. Ex. 1013, [0048]; Ex. 1018 at 8-9.

230. Thus, modifying Zhang with Mirabbasi as described above to include two ADC for generating I and Q signals (which are the features of claim 4) would have been nothing more than using a known technique to improve a similar device in the same way. The known technique is Mirabbasi's technique of using its low-IF receiver to split up the input analog signal into I and Q signals and separately digitize them using separate ADCs. A POSITA would have considered Mirabbasi's low-IF receiver architecture to be similar to Zhang's receiver because they have the same

basic architecture, such as a mixer/multiplier followed by a filter. A POSITA would have also understood that Mirabbasi's technique would have improved Zhang's receiver in the same way that it provides improvements, like eliminating DC offset, over other common architectures described by Mirabbasi. Ex. 1018, 9-10. The combination of Zhang and Mirabbasi also combines known elements according to known methods to yield predictable results. The known elements are Zhang's bank of complex multipliers 320, selector 240, and demodulators 250 and Mirabbasi's low-IF receiver architecture including circuitry for splitting the input RF signal into in-phase and quadrature signals and separately processing the signals. Ex. 1013, Figs. 2-3; Ex. 1018, Fig. 10. The known methods are Mirabbasi's methods of implementing various receiver architectures by connecting known components, such as mixers and filters to other known components like ADCs. Also, a POSITA would have understood that the combination of Zhang with Mirabbasi yields the predictable result of separating Zhang's multi-channel RF signal into in-phase and quadrature analog signals, performing analog-to-digital conversion of each analog signal, and then demultiplexing each digital signal into separate channels.

231. This combination of Zhang and Mirabbasi is predictable because Mirabbasi's low-IF architecture used components that were common and well known to a POSITA, and because the basic architecture of the low-IF receiver matched that of Zhang's receiver, thus requiring little or no deviation in Mirabbasi's

implementation when applied to Zhang. *See e.g.*, Ex. 1025 at 279-280; Ex. 1034 at 63. Further, in my opinion, a POSITA would have had a reasonable expectation of success in combining Zhang and Mirabbasi, because the implementation of Mirabbasi's receiver was taught in basic textbooks and well within a POSITA's skillset. *See e.g.*, Ex. 1025 at 279-280; Ex. 1034 at 63.

9.4.2. Dependent Claim 14

Claim 14: "The television receiver device of claim 11, wherein the ADC comprises: a first ADC configured to generate a digital in-phase signal; and a second ADC configured to generate a digital quadrature signal."

232. It is my opinion that Zhang in view of Mirabbasi teaches claim 14.

233. Claim 14 recites features substantially identical to those of claim 4 and is rendered obvious by the combination of Zhang and Mirabbasi, for the same reasons discussed above with respect to claim 4. *See* Section 9.4.1, *supra*.

9.5. Zhang in view of Dong Renders Claims 5, 6, 15, and 16 Obvious (Ground F)

234. In the following, I show how Zhang in view of Dong renders claims 5, 6, 15, and 16 obvious. To help illustrate how the disclosures of these references map to the claim limitations, I have color coded some of my remarks and some figures in the noted art below.

9.5.1. Dependent Claim 5

Claim 5: "The method of claim 1, wherein the extracted information is stored for use in a digital video recorder (DVR)."

235. Dong relates to set-top box receiver architectures for satellite television communications. Ex. 1078, [0002]. Fig. 1A and Fig. 1B show set-top box environment and circuitry, respectively. Dong describes a satellite set-top box that receives an input signal spectrum from a satellite antenna and processes the signal spectrum. The output signal from the set-top box is provided to a television, "a videocassette recorder (VCR)" or other device as represented by the TV/VCR block 174. Ex. 1078, [0026].

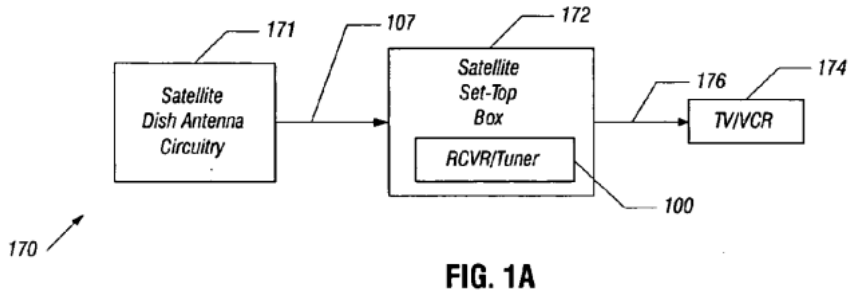

Ex. 1078, Fig. 1A (annotated)

236. Dong discloses outputting demodulated digital data as a PVR output stream (aqua) for storage in a personal video recorder (PVR) (the claimed "digital video recorder (DVR)"). Ex. 1078, [0027], [0082]. Dong describes that the output signal is processed by a demodulator and a decoder to produce an output stream. And the output stream would have been "stored by personal video recorders (PVRS)

for later use and viewing by a user," as represented by the PVR output stream 188 (aqua). Ex. 1078, [0027].

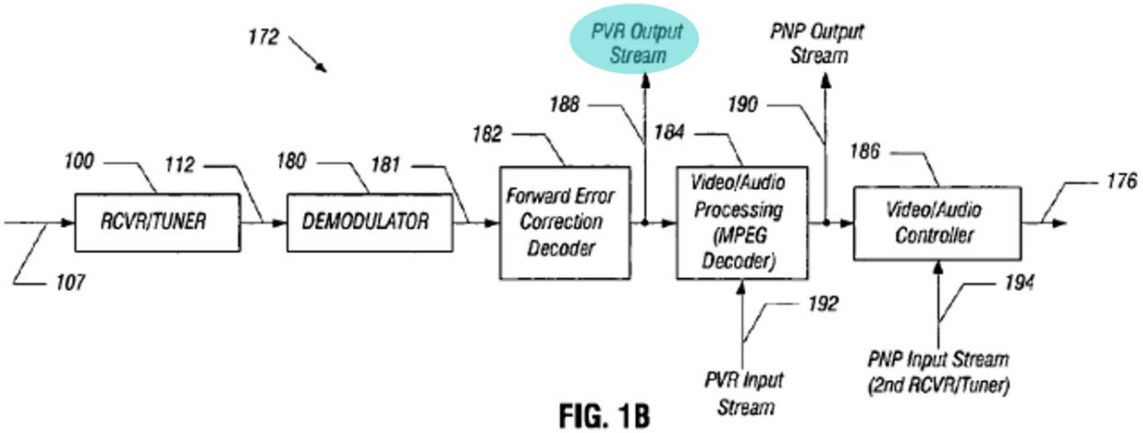

Ex. 1078, Fig. 1B (annotated)

237. A POSITA would have understood that a PVR is another name for (or type of) a DVR. Ex. 1078, [0027], [0082] (Dong using "DVR" interchangeably with PVR); Ex. 1051, [0018].

238. To the extent that Zhang's disclosures related to its PVR do not disclose claim 5, it would have been obvious to modify Zhang in view of Dong to store extracted information from channels D_1 to D_m in PVR (or DVR) storage for use in the PVR (or DVR). In other words, it would have been obvious to combine Zhang and Dong such that the information extracted and output by Zhang's demodulators 250 (the claimed "extracted information") is stored for use in a DVR. This is similar to how Dong outputs its PVR output stream for storage in its PVR. For example, a POSITA would have found it obvious to modify Zhang in view of Dong to store

information extracted from channels D_1 to D_m in a PVR (or DVR) for subsequent use in the PVR (or DVR). A POSITA would have been motivated to modify Zhang based on Dong to store the digital information in a DVR, which is like Zhang's PVR or Dong's PVR/DVR, because a POSITA would have wanted to make the digital information (such as video content for a television show) available for access at a later time. Ex. 1078, [0027].

239. A POSITA would have known that storing the extracted information in the DVR gives a subscriber/consumer, who owns or possesses the DVR, the option to access the information at a time that is most convenient to the subscriber and allows the subscriber (or family members or others who live in the same house with the subscriber) to access the information multiple times. A POSITA would have also known that DVRs, due to their ability to store video content, allow additional playback features, like rewind, pausing, and fast-forwarding. Ex. 1033, 455. A POSITA would have appreciated that subscribers want these features (e.g., to have more control over the playback and to skip commercials) and want to watch content at their own convenience because different times are convenient for different subscribers (and different family members or others living within the household of the subscriber). Ex. 1013, [0005] (Zhang shows that a POSITA would have known about the demand for video-on-demand content driven by consumers as opposed to video content being broadcast according to network schedules). Thus, there would

have been demand by subscribers for these playback features and this convenience of accessing content on demand. A POSITA would have understood that providing such playback features and convenience would have fulfilled this demand, which would have helped service providers (that employ POSITAs) to attract and retain subscribers, which would have led to increased revenues. With the goal of increasing revenues, a POSITA would have sought to improve the subscriber experience by offering the combination of Zhang and Dong in which demodulated information is stored for use in a DVR. Ex. 1013, [0044] (Zhang also shows that a POSITA would have wanted to enable "new home networking architectures, new classes of consumer electronics devices, and new services"), [0048].

240. The combination of Zhang and Dong merely combines known elements according to known methods to yield predictable results. The known elements are Zhang's Figure 2 circuit including demodulators 250 and Dong's PVR/DVR. Ex. 1013, [0023]-[0029], Fig. 2; Ex. 1078, [0027], [0082], Fig. 1B. The known methods are Dong's connecting of a demodulator to a PVR/DVR to provide the PVR output stream. Ex. 1078, [0027], Fig. 1B. A POSITA would have understood that the predictable result of combining these known elements using the known methods is the connection of Zhang's demodulators 250 to a PVR/DVR so that the output of Zhang's demodulators 250 is stored for use in the PVR/DVR. Ex. 1013, [0023]-[0029], Fig. 2; Ex. 1078, [0027], [0082], Fig. 1B. A POSITA would have understood

that the combination of Zhang and Dong would have been nothing more than using a known technique disclosed by Dong to improve a similar device in the same way. The known technique is outputting a PVR output stream from a demodulator to a PVR/DVR. Ex. 1078, [0027], Fig. 1B. The similar device is Zhang's Figure 2 receiver circuit that has a demodulator similar to Dong's receiver circuit having a demodulator 180. Ex. 1013, [0023]-[0029], Fig. 2. A POSITA would have understood that using Dong's known technique with Zhang's similar system would have improved Zhang in the same way that it improves Dong, which is by outputting extracted information from Zhang's demodulator 250 to a DVR to enable later access (once or multiple times) to the extracted information. Ex. 1013, [0023]-[0029], Fig. 2; Ex. 1078, [0027], [0082], Fig. 1B. There are many scenarios where storing or recording information (e.g., a TV program) for later use (e.g., viewing) is needed or desired. For example, a consumer or subscriber might want to watch a show over and over again. Or, as another example, one person in a house might watch a show and another person might want to watch the same show later.

241. It is also my opinion that a POSITA would have expected success in the combination of Zhang and Dong because connecting a DVR to Zhang's demodulators 250 to output information extracted from demodulators 250 to the DVR would have been a routine skill for the POSITA. Ex. 1013, [0048]; Ex. 1078,

[0026]-[0027], [0106], Figs. 1A-1B; Ex. 1001, 1:55-58 (even the ’275 patent admits that DVR applications were known).

9.5.2. Dependent Claim 6

Claim 6: “The method of claim 1, wherein the extracted information is output for a picture-in-picture display.”

242. In my opinion, Zhang in view of Dong teaches claim 6, although Zhang does not expressly disclose outputting the demodulated channels for a picture-in-picture display. Nevertheless, Zhang’s Figure 2 circuit simultaneously demodulates multiple channels thereby providing the foundation for offering picture-in-picture service.

243. Dong discloses a circuit that has a tuner 100 and demodulator 180. The circuit outputs demodulated digital data as a PNP output stream 190 (**magenta**) for displaying a picture-in-picture feed along with a primary feed on a TV (the claimed “picture-in-picture display”). Ex. 1078, [0027], [0082]. A video data stream processed by a video/audio processing circuitry such as an MPEG decoder would have been used for “picture-in-picture (PnP) operations.” An example situation is that the set-top box circuitry includes two tuners with one tuner providing the primary viewing feed and a second tuner providing the PnP viewing feed. Ex. 1078, [0027].

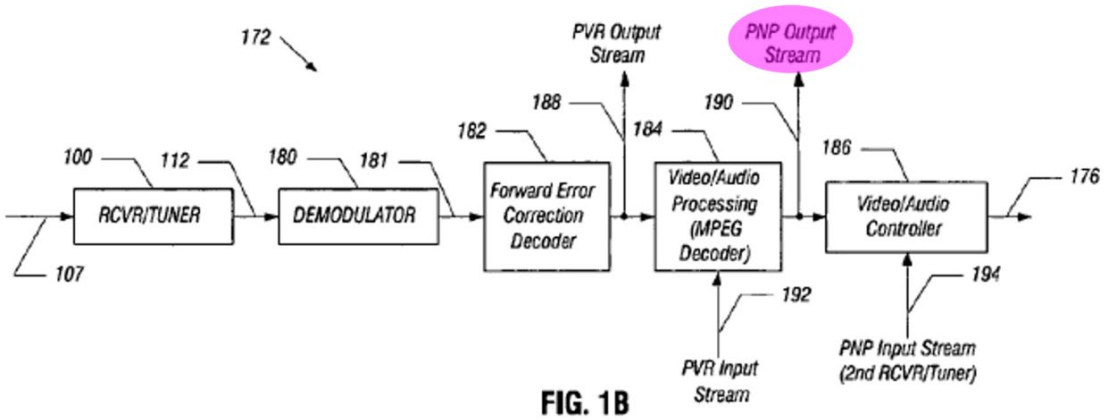

Ex. 1078, Fig. 1B (annotated)

244. Dong's Figure 1B also shows that a PNP input stream 194 (which is the PNP output stream of another instance of this circuit having another tuner) is combined with a primary viewing feed by a video/audio controller 186 to generate an output signal 176 for providing the picture-in-picture display on a TV. Ex. 1078, [0027].

245. A POSITA would have found it obvious to combine Zhang and Dong such that the information extracted and output by Zhang's demodulators 250 (which is the claimed "extracted information") is output for displaying a picture-in-picture feed on a TV, in a similar way to how Dong outputs its PNP output stream for display. Thus, the combination teaches claims 6. For example, it would have been obvious to modify Zhang in view of Dong to output information extracted from channels D_1 to D_m as a PNP output stream to a controller that generates an output signal for displaying a picture-in-picture feed on a TV. The controller would

function like Dong's video/audio controller 186 that generates output signal 176 to provide picture in picture displays.

246. A POSITA would have been motivated to carry out the combination of Zhang and Dong to output the extracted information for a PnP display because a POSITA would have wanted to enhance the subscriber's experience by enabling a subscriber to watch multiple television channels at the same time. Ex. 1078, [0082]. Dong explains that "it may later be desired by a user…to concurrently tune into a second signal channel, for example, for use with PnP". *Id*. A POSITA would have appreciated that a subscriber may want to watch two different television programs being broadcast at the same time. Besides, a POSITA would understand that multiple people within the subscriber's household may want to watch different programs on the same television. For addressing these two situations, picture-in-picture was a well-known feature. Ex. 1033 at 467; Ex. 1035, 4:37-43; Ex. 1001, 1:55-58 (even the '275 patent admits that picture-in-picture applications were known). As a result, subscribers would have had demand for receivers with the ability to provide picture-in-picture. Providing picture-in-picture would have fulfilled this demand, which would have helped service providers (that employ POSITAs) to attract and retain subscribers, which would have led to increased revenues. The goal of increasing revenues would have motivated a POSITA to seek to improve the subscriber experience by offering the combination of Zhang and Dong in which demodulated

information is output for picture-in-picture display. Ex. 1013, [0044], [0048]. For example, Zhang's paragraph [0044] shows that a POSITA would have wanted to enable "new home networking architectures, new classes of consumer electronics devices, and new services." Ex. 1013, [0044].

247. The combination of Zhang and Dong merely combines known elements according to known methods to yield predictable results. The known elements are Zhang's Figure 2 circuit including demodulators 250 and Dong's circuitry including connections for carrying a primary viewing feed and PnP viewing feed and video/audio controller 186 for combining the feeds for display on a TV. Ex. 1013, [0023]-[0029], Fig. 2; Ex. 1078, [0027], Fig. 1B. The known methods are Dong's processing and feeding of demodulator outputs to a TV. Ex. 1078, [0027], Fig. 1B. A POSITA would have understood that combining these known elements results in the predictable result of a picture-in-picture display formed from the data output by two of Zhang's demodulators 250. Ex. 1013, [0023]-[0029], Fig. 2; Ex. 1078, [0027], Fig. 1B. The combination of Zhang and Dong would have been nothing more than using a known technique to improve a similar device in the same way. The known technique is Dong's outputting a PNP output stream from a demodulator to video/audio controller 186 that combines it with a primary viewing feed for a picture-in-picture display. Ex. 1078, [0027], Fig. 1B. The similar device is Zhang's Figure 2 receiver circuit having a demodulator similar to Dong's receiver circuit

having a demodulator 180. Ex. 1013, [0023]-[0029], Fig. 2; Ex. 1078, [0027], Fig. 1B. A POSITA would have understood that using Dong's technique would have improved Zhang's circuit in the same way that it improves Dong's circuit, which is by outputting extracted information from Zhang's demodulator 250 to a video/audio controller that combines it with a primary viewing feed for a picture-in-picture display. *Id*.

248. As using demodulator outputs for two channels to get two feeds for a picture-in-picture display was well-known and the combination does not involve creating any new hardware or software, a POSITA would have expected success in the combination of Zhang and Dong. Ex. 1013, [0048]; Ex. 1078, [0027], [0082], [0106], Fig. 1B; Ex. 1001, 1:55-58 (even the '275 patent admits that picture-in-picture applications were known).

9.5.3. Dependent Claim 15

Claim 15: "The television receiver device of claim 11, wherein the extracted information is stored for use in a digital video recorder (DVR)."

249. Claim 15 is substantially identical to claim 5. The only difference between claims 15 and 5 is that claim 15 depends from claim 11. The body of the claim is the same. Thus, it is my opinion that claim 15 is disclosed and taught by Zhang and Dong, for the same reasons set forth in connection with claim 5. See my explanation at Section 9.5.1.

9.5.4. Dependent Claim 16

Claim 16: "The television receiver device of claim 11, wherein the extracted information is output for a picture-in-picture display."

250. Claim 16 is substantially identical to claim 6. The only difference between claims 16 and 6 is that claim 16 depends from claim 11. The body of the claim is the same. Thus, it is my opinion that claim 16 is disclosed and taught by Zhang in view of Dong, for the same reasons set forth in connection with claim 6. See my explanation at Section 9.5.2.

9.6. Alternate Arguments and Grounds based on Means-Plus-Function Construction of "radio front end" and "digital frontend"

9.6.1. Claims 11, 12-13, 15, and 17-20 based on Zhang (Grounds A/B) Claims 12-13 based on Ground C, Claim 12 based on Ground D, and Claims 15-16 based on Ground F

251. As I noted above in Section 6, I was asked to consider a potential means-plus function construction of "radio front end" of Element [11C]. As discussed in that section, the corresponding structure is illustrated in Figures 2 and 4 of the '275 patent. In this section, I include additional arguments showing how Zhang anticipates (Ground A) and renders obvious (Ground B) the same claims even if "radio front end" is construed to be a means-plus-function term.

252. To the extent "radio front end" of Element [11C] is construed to be a means-plus function term, it is my opinion that Zhang's down-converter 210 is the claimed "radio front end." Zhang's down-converter 210 has the same (or equivalent)

structure as the radio front ends 210, 410 of the ’275 patent that are identified as the corresponding structures. Like the radio front ends 210 and 410 of the ’275 patent, Zhang’s down converter 210 includes a multiplier (which a POSITA would have understood is a mixer) followed by a filter: “… the multi-channel analog RF signal is **multiplied** by a reference signal to a lower frequency band. Signal components outside the lower frequency band are then **filtered** out.” Ex. 1013, [0025]. In other words, a POSITA would have understood that because Zhang’s down-converter 210 multiplies the multi-channel analog RF signal by a reference signal, Zhang includes a mixer. *Id.* A POSITA would have also understood that Zhang’s mixer is substantially the same as the ’275 patent’s mixers 211, 221 in radio front end 210 and mixers 411, 421 in radio front end 410 that multiply the RF input by a frequency signal 205, 405. *Compare* Ex. 1013, [0025], Fig. 2 *with* Ex. 1001, 4:65-5:21, 7:31-41, Figs. 2, 4. In addition, Zhang’s down-converter 210 includes a bandpass filter 212, which a POSITA would have understood is substantially the same as the ’275 patent’s filters 215, 225 in the radio front end 210 and its filters 415, 425 in the radio front end 410. *Compare* Ex. 1013, [0026], Fig. 2 *with* Ex. 1001, 5:22-37, 7:41-46, Figs. 2, 4. Also, Zhang’s down-converter 210 processes the input RF signal by downconverting it as explained above, which means it performs the same claimed function of “process[ing] the input signal” that is attributed to the claimed “radio front end” in claim 11.

253. Further, I understand that structures are deemed equivalent if they perform the same function in the same way to achieve the same result. In this regard, I note that Zhang's down-converter 210 and the '275 patent's radio front ends 210, 410 perform the same function of processing the input signal in the same way, which is by down-converting an analog RF input signal by multiplying the input signal with a reference signal and then filtering the signal after the multiplying. Zhang's down-converter 210 and the '275 patent's radio front ends 210, 410 also achieve the same result of obtaining a downconverted analog RF signal. Ex. 1013, [0025]-[0026]; Ex. 1001, 2:64-3:1, 4:43-5:47.

254. In addition, as I noted above in Section 6, I was also asked to consider a potential means-plus function construction of "digital frontend (DFE)" of Element [11E] and claims 12 and 13. As discussed in that section, the corresponding structure is illustrated in Figures 2 to 4 of the '275 patent. In this section, I include additional arguments showing how Zhang anticipates (Ground A) and renders obvious (Ground B) the same claims even if "digital frontend" is construed to be a means-plus-function term.

255. To the extent "digital frontend (DFE)" of Element [11E] and claims 12 and 13 is construed to be a means-plus function term, it is my opinion that Zhang's demultiplexer 230 alone or with all or part of the digital selector 240 is the claimed "digital frontend." Zhang's demultiplexer 230 has the same (or equivalent) structure

as at least the digital front end 230 of the ’275 patent that is identified as the corresponding structure. For example, as shown below where Figure 3 of Zhang (left) is side-by-side with Figure 2 of the ’275 patent (right), Zhang’s demultiplexer 230 includes a bank of complex multipliers 320(1…n) (**purple**) that are each followed by one of the low pass filters 330(1…n) (**green**), which is the same as how the ’275 patent’s digital front end 230 includes a bank of N complex mixers 250 (**purple**) that are each followed by one of the low pass filters 260a-n (**green**). *Compare* Ex. 1001, 3:3-7, 6:8-7:15 *with* Ex. 1013, [0027], [0028], [0030], [0031], [0032]; *see also* Sections 9.1.1.e, 9.1.8.e, *supra*.

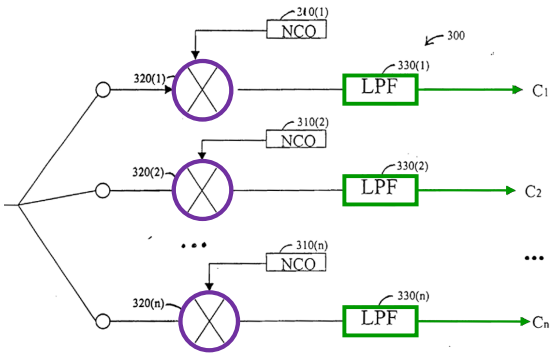

Fig. 3

Ex. 1013, Fig. 3 (annotated)

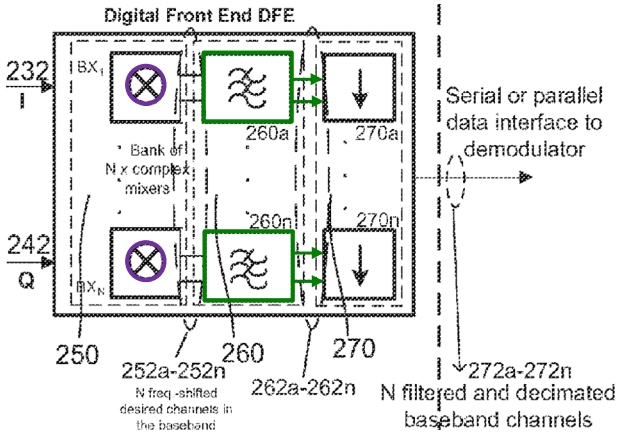

Ex. 1001, Fig. 2 (annotated)

256. Also, Zhang’s demultiplexer 230, alone or in combination with all or part of the digital selector 240, selects channels C1 to Cn (or D1 to Dm) and outputs the selected channels to one or more demodulators 250 as a digital datastream via

either a serial interface or parallel interface as explained above (See Sections 9.1.1.e-f and 9.1.2 above), which means the demultiplexer 230, with all or part of the digital selector 240, performs the same claimed functions of "select[ing] the plurality of desired channels from the digitized signal and output[ting] the selected plurality of desired channels to at least one demodulator as a digital datastream," ([11E]-[11F]), "output[ting] the digital datastream via a serial interface" (claim 12), and "output[ting] the digital datastream via a parallel interface" (claim 13) that are attributed to the claimed "digital frontend" or "DFE" in claims 11-13.

257. Further, as mentioned, I understand that structures are deemed equivalent if they perform the same function in the same way to achieve the same result. In this regard, I note that Zhang's demultiplexer 230, alone or in combination with all or part of the digital selector 240, and the '275 patent's digital front end 230 perform the same function of selecting and outputting a respective desired channel in the same way, which is by first downconverting the respective desired channel to baseband and then low-pass filtering with a FIR filter to isolate the desired channel. Zhang's demultiplexer 230, alone or in combination with all or part of the digital selector 240, and the '275 patent's digital front end also achieve the same result of selecting and outputting a plurality of desired channels as a digital datastream. *Compare* Ex. 1013, [0028]-[0032], Figs. 2-3 *with* Ex. 1001, 3:3-10, 5:56-7:20, Figs. 2, 3.

258. Thus, Zhang (Grounds A/B) anticipates and renders obvious claims 11, 12-13, 15, 17-20 (Sections 9.1.8-14), Zhang in view of Pandey (Ground C) renders obvious claims 12-13 (Sections 9.2), Zhang in view of Zhang '933 (Ground D) renders obvious claim 12 (Section 9.3.1), and Zhang in view of Dong (Ground F) renders obvious claims 15-16 (Sections 9.5), for the reasons stated above, even if "radio front end" and "digital frontend" are given means-plus-function constructions.

9.6.2. Claims 11-15 and 17-20 based on Zhang in view of Mirabbasi (Ground E)

259. Further, if "radio front end" of Element [11C] and "digital frontend" of Element [11E] and claims 12 and 13 were to be construed as means-plus function terms, and if the corresponding structure were limited to what is shown in, for example, Figures 2 and 3 (both shown below), it is my opinion that the combination of Zhang and Mirabbasi teaches these elements and claims.

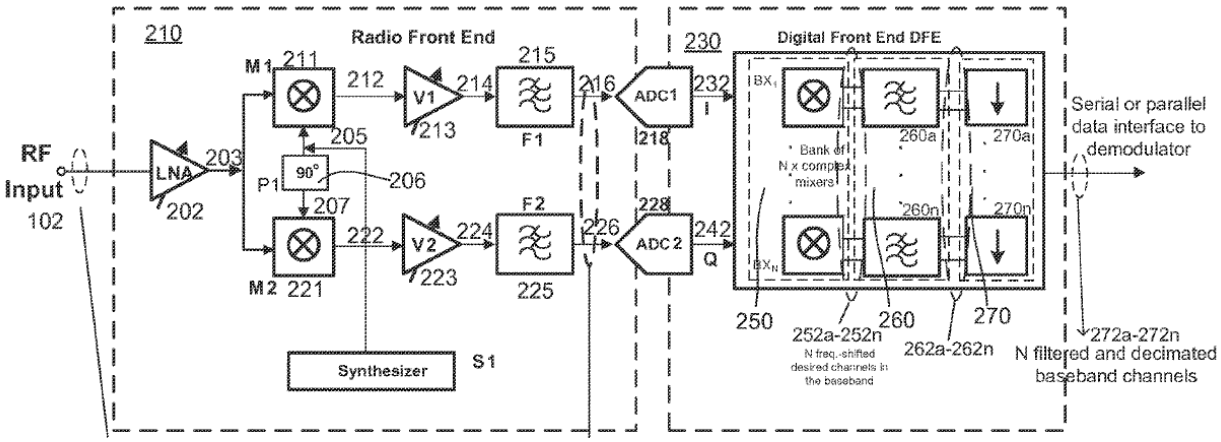

Ex. 1001, Fig. 2 (annotated)

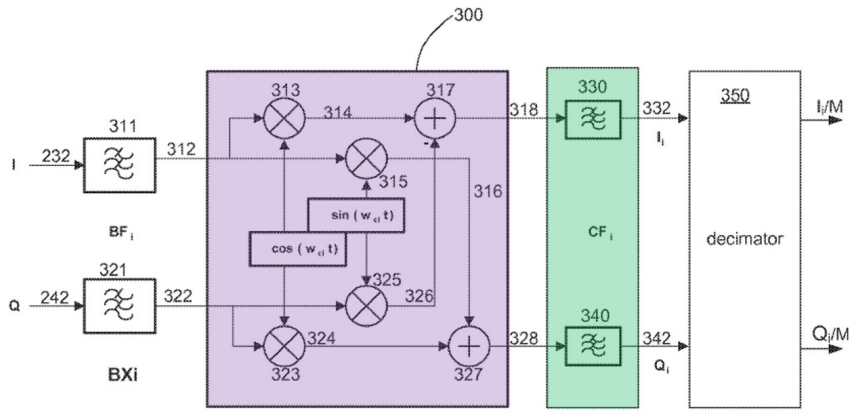

FIG. 3

Ex. 1001, Fig. 3 (annotated)

260. As I explained above with respect to claims 4 and 14, the combination of Zhang in view of Mirabbasi would have involved implementing Zhang's converter 210 (**red**), ADC 220 (**gold**), and each bank of complex multipliers 320(1…n) (**purple**) of demultiplexer 230 with Mirabbasi's corresponding circuitry, as illustrated in the following drawing made from Figures 2 and 3 of Zhang (on top) and Figure 10 of Mirabbasi (on bottom). Ex. 1013, [0023]-[0032], Figs. 2 and 3; Ex. 1018, pp. 9-10, Fig. 10.

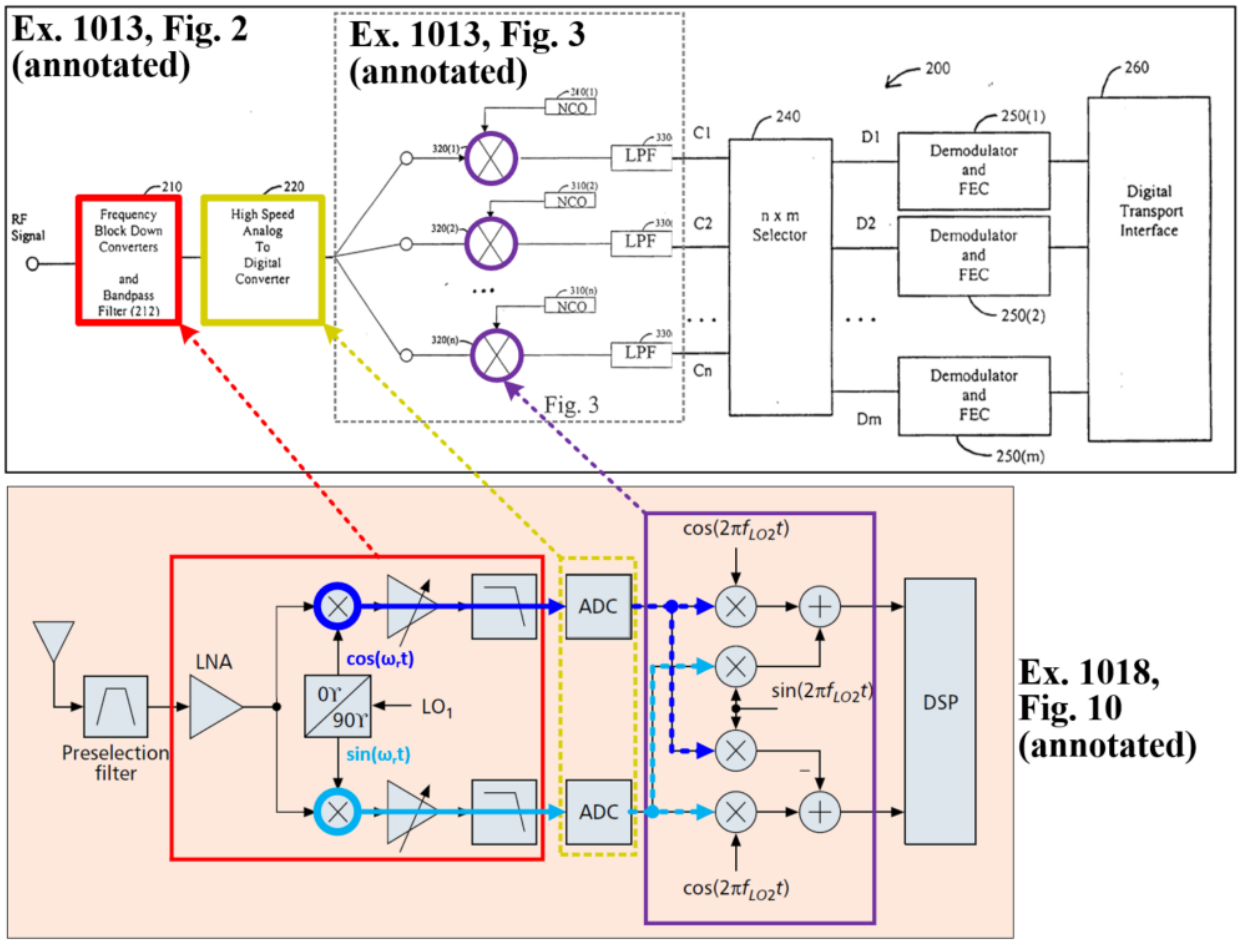

261. First, this combination of Zhang in view of Mirabbasi teaches the same or equivalent structure of a "radio front end", with any differences in my view being insubstantial.

262. In the combination of Zhang and Mirabbasi, Zhang's down-converter 210 implemented with Mirabbasi's radio front end circuitry (**red box** above and below) is the claimed "radio front end." Mirabbasi's radio front end circuitry has the same (or equivalent) structure as the radio front ends 210, 410 of the '275 patent that are identified as the corresponding structures (See Section 6 above). In particular, Mirabbasi's radio front end circuitry (**red**) includes a low-noise amplifier (LNA) and

two paths (**blue** and **light blue**) where each path includes a mixer, amplifier, and filter, which is the same as how the ’275 patent’s radio front end 210 (**red**) includes LNA 202 and two paths (**blue** and **light blue**) where each path includes a mixer 211 or 221, an amplifier 213 or 223, and a filter 215 or 225. *Compare* Ex. 1018, 7-10, Figs. 7, 10 *with* Ex. 1001, 4:43-5:37, Fig. 2. This is also the same as the ’275 patent’s radio front end 410, which includes LNA 403, and two paths that each include a mixer 411 or 421, an amplifier 413 or 423, and a filter 415 or 425. Ex. 1001, 7:31-46, Fig. 4.

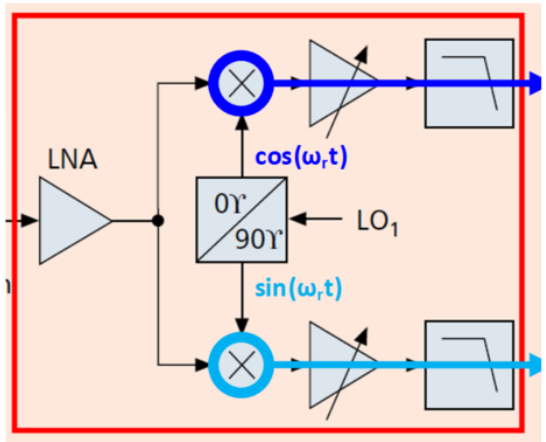

Ex. 1018, Fig. 10 (annotated)

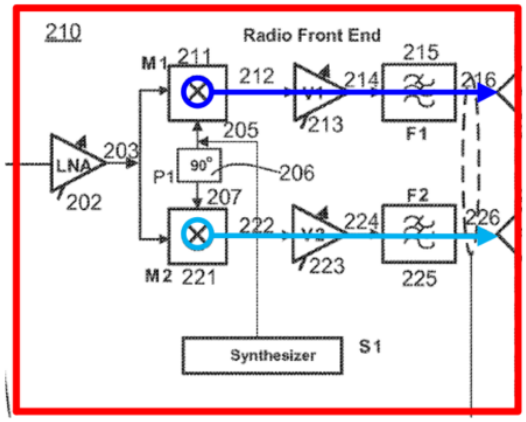

Ex. 1001, Fig. 2 (annotated)

263. Also, in the combination of Zhang and Mirabbasi, Mirabbasi’s radio front end circuitry (**red**) processes Zhang’s RF signal (the claimed “input signal”) by separating it into I and Q components and downconverting them, which means it performs the same claimed function of “process[ing] the input signal” that is attributed to the claimed “radio front end” in claim 11.

264. Further, I understand that structures are deemed equivalent if they perform the same function in the same way to achieve the same result. In this regard, I note that Mirabbasi's radio front end circuitry (**red**) and the '275 patent's radio front ends 210, 410 perform the same function of processing the input signal in the same way, which is by down-converting an analog RF input signal by multiplying the input signal with a reference signal and then filtering the signal after the multiplying. Mirabbasi's radio front end circuitry and the '275 patent's radio front ends 210, 410 also achieve the same result of obtaining I and Q components of a downconverted analog RF signal. Ex. 1018, 6-10; Ex. 1001, 2:64-3:1, 4:43-5:47.

265. In addition, in this section I include additional arguments showing how the combination of Zhang and Mirabbasi teaches claims 11-13 even if "digital frontend" is construed to be a means-plus-function term. In the combination of Zhang and Mirabbasi, Zhang's demultiplexer 230 is modified such that each bank of complex multipliers 320(1…n) (**purple**) is implemented with Mirabbasi's complex mixer (**purple**), as shown below.

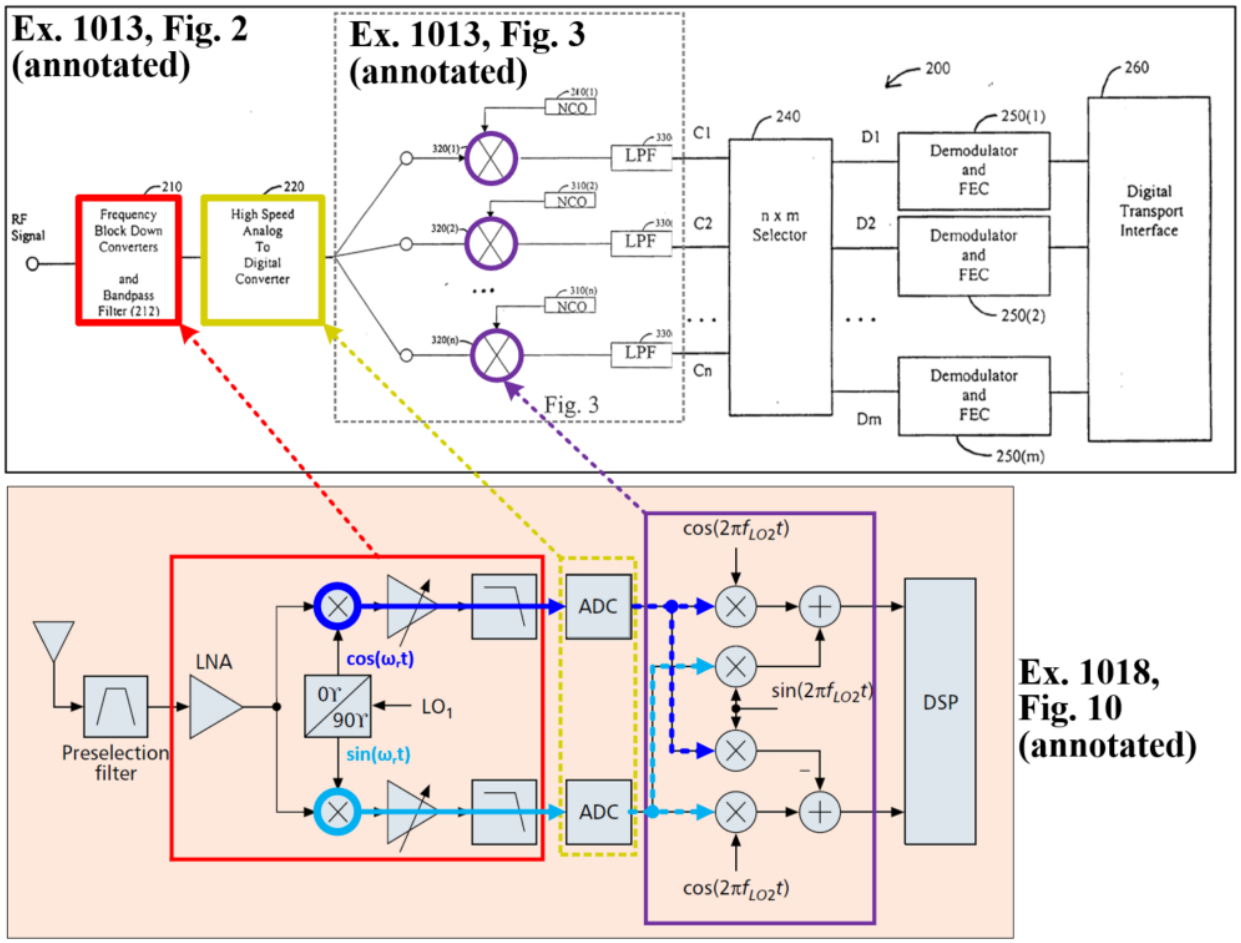

266. The modified demultiplexer 230 (alone or with all or part of the digital selector 240) is the claimed "digital frontend (DFE)." The combination of Zhang and Mirabbasi presents a modified demultiplexer 230 that has the same (or equivalent) structure as the digital front end 230 of the '275 patent that is identified as the corresponding structure. For example, as shown below where the combination is illustrated on the left and Figures 2-3 of the '275 patent are on the right, the modified demultiplexer 230 in the combination of Zhang and Mirabbasi includes a bank of complex mixers 320 (**purple**) that each have four mixers/multipliers and two adders and a respective low pass filter 330 (**green**) at the output of each adder, which is the

same as how the ’275 patent’s digital front end 230 includes a bank of complex mixers 250 (**purple**) that each have four mixers/multipliers and two adders and a respective low pass filter 260a-n (**green**) at the output of each adder. *Compare* Ex. 1013, [0028], [0030]-[0032], Figs. 2-3 and Ex. 1018, 6, 9-10, Figs. 3, 9-10 *with* Ex. 1001, 3:3-10, 5:56-7:61, Figs. 2, 3. I note that the decimators 270a-n in Figure 2 of the ’275 patent are optional, and a POSITA would have understood that those are not required by the claimed “digital frontend” as the claims do not require decimating. Ex. 1001, 3:8-10, 6:17-19.

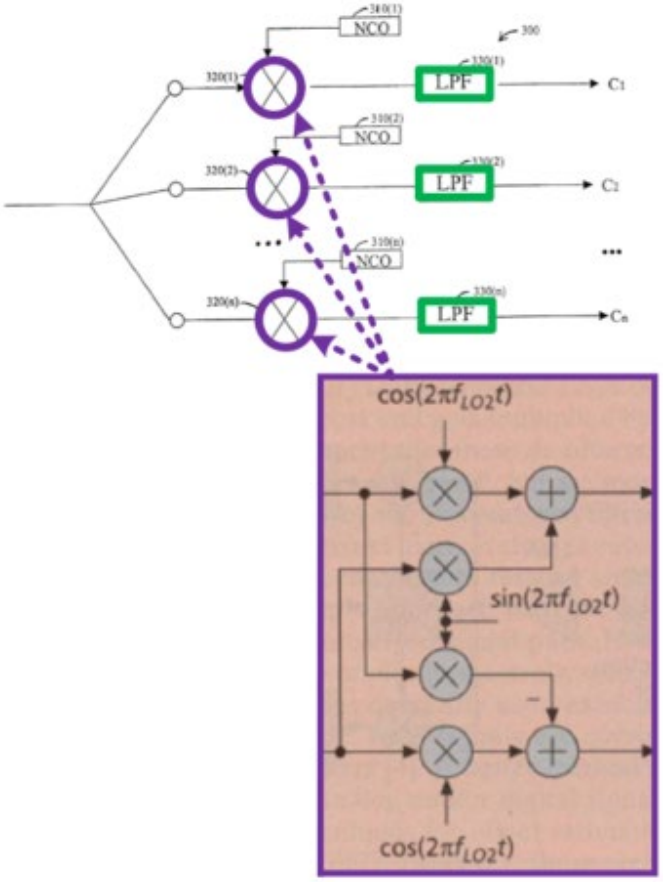

Ex. 1013, Fig. 3 (annotated) and Ex. 1018, Fig. 10 (annotated)

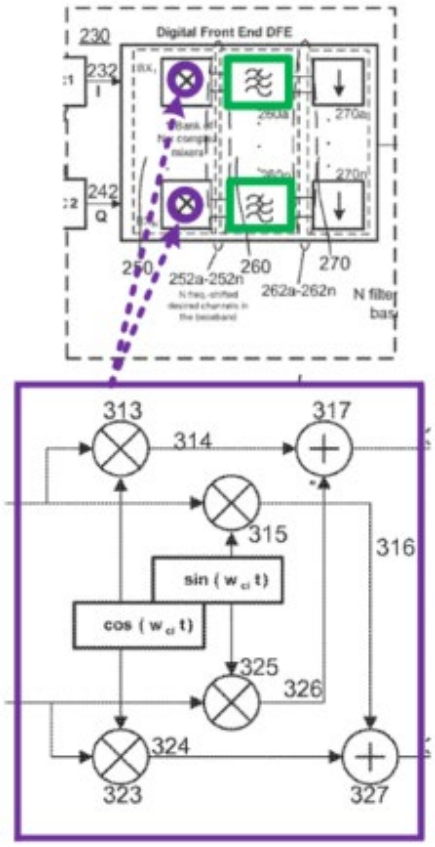

Ex. 1001, Figs. 2-3 (annotated)

267. I also note that the modified demultiplexer 230 in the combination of Zhang and Mirabbasi's would have retained Zhang's NCOs 310 for providing the sine and cosine signals used by its four mixers/multipliers, in the same manner that the '275 patent's mixer 300 uses NCOs to generate the sine and cosine signals used by its four mixers/multipliers. *Compare* Ex. 1013, [0032], Fig. 3 and Ex. 1018, 6, 9 *with* Ex. 1001, 6:54-59. Mirabbasi's complex mixer has the identical structure and performs the identical downconversion (i.e., shifting the frequency of in-phase and quadrature components of the digital complex input signal) as mixer 300 in Figure 3 of the '275 patent. Ex. 1018, pp. 9-10, Fig. 3; Ex. 1001, Fig. 3, 6:33-52, 9:49-54; *see also* Ex. 1025, pp. 279-280; Ex. 1034, p. 63. Moreover, the modified demultiplexer 230 (alone or in combination with all or part of the digital selector 240) still selects channels C_1 to C_n (or D_1 to D_m) and outputs the selected channels to one or more demodulators 250 as a digital datastream via either a serial interface or parallel interface as explained above (See Sections 9.1.1.e-f and 9.1.2 above), which means the modified demultiplexer 230, with all or part of the digital selector 240, performs the same claimed functions of "select[ing] the plurality of desired channels from the digitized signal and output[ting] the selected plurality of desired channels to at least one demodulator as a digital datastream," ([11E]-[11F]), "output[ting] the digital datastream via a serial interface" (claim 12), and

"output[ting] the digital datastream via a parallel interface" (claim 13) that are attributed to the claimed "digital frontend" or "DFE" in claims 11-13.

268. Further, as mentioned, I understand that structures are deemed equivalent if they perform the same function in the same way to achieve the same result. In this regard, I note that the modified demultiplexer 230, alone or in combination with all or part of digital selector 240, and the '275 patent's digital front end 230 perform the same function of selecting and outputting desired channels in the same way, which is by first downconverting I and Q components of a desired channel to baseband and then low-pass filtering each component to isolate the desired channel. The modified demultiplexer 230 in the combination, alone or with all or part of the digital selector 240, and the '275 patent's digital front end 230 also achieve the same result of selecting and outputting a plurality of desired channels as a digital datastream.

269. Thus, Zhang in view of Mirabbasi renders obvious independent claim 11 and dependent claims 12-15 and 17-20, even if "radio front end" and/or "digital frontend" are given means-plus-function constructions. I note that the modification of Zhang's downconverter 210, ADC 220, and demultiplexer 230 based on Mirabbasi does not change the basic underlying operations of the components in Zhang's demodulation circuit (e.g., the demodulation circuit 200 shown in Figure 2 of Zhang) that I relied on for showing how Zhang alone teaches claims 11-13, 15,

and 17-20 and this modification is the same as the one that I relied on for showing claim 14. For example, even though Zhang's frequency block downconverter 210 is implemented with Mirabbasi's analog complex mixer, the modified downconverter 210 is still processing the input RF analog signal. Likewise, even though Zhang's ADC 220 is implemented with Mirabbasi's pair of ADCs, the modified ADC 220 is still digitizing the down-converted signal. Further, even where Zhang's complex multipliers 320 in its demultiplexer 230 are implemented with Mirabbasi's complex mixer, the modified demultiplexer 230 (alone or with digital selector 240) still would select channels C1 to Cn and D1 to Dm and output them to demodulators 250. Therefore, it is my opinion that the combination of Zhang and Mirabbasi teaches claims 11-15 and 17-20 for the same reasons given above (see Sections 9.1 and 9.4), except that here the structure from Mirabbasi is relied on for the "radio front end" and "digital frontend."

9.6.3. Claims 12 and 13 based on Zhang in view of Mirabbasi and Pandey (Ground G), Claim 12 based on Zhang in view of Mirabbasi and Zhang '933 (Ground H), and Claims 15-16 based on Zhang in view of Mirabbasi and Dong (Ground I)

270. The features added to Zhang from Mirabbasi for showing the "radio front end" and "digital frontend," as discussed above with respect to claim 11 (Sections 9.6.2), are independent of the Pandey features (e.g., parallel and serial interfaces) added to Zhang in Ground C (Sections 9.2.2-3) for claims 12 and 13, the

Zhang ’933 features (e.g., serial interface to single demodulator) added to Zhang in Ground D (Section 9.3.1) for claim 12, and the Dong features (e.g., DVR, PNP) added to Zhang in Ground F (Sections 9.5.3-4) for claims 15-16. Thus, a POSITA would have added Mirabbasi’s teachings of a radio front end and digital frontend (Sections 9.6.2) to each of these combinations with the same motivations and expectation of success that were given for adding Mirabbasi to Zhang alone.

271. Thus, Zhang in view of Mirabbasi and Pandey (ground G) renders claims 12 and 13 obvious, Zhang in view of Mirabbasi and Zhang ’933 (ground H) renders claim 12 obvious, and Zhang in view of Mirabbasi and Dong (Ground I) renders claims 15 and 16 obvious, for the reasons discussed above with respect to each of these claims, and for the reasons for combining Mirabbasi with Zhang (which teaches the “radio front end” and “digital frontend” under means-plus-function constructions).

10. CONCLUSION

272. All of the statements made in this declaration of my own knowledge are true. All statements made based on information and belief are believed to be true. I declare under penalty of perjury that the foregoing is true and correct.

Dated: 11/16/2024 By: David B. Lett

David B. Lett

CLAIM LISTING APPENDIX

U.S. Pat. No. 11,785,275

Designation	Claim Language
Claim 1	
[1A]	A method for operating a television receiver, comprising:
[1B]	receiving, by an input terminal, an input signal comprising broadcast channels, the broadcast channels comprising a plurality of desired channels and a plurality of undesired channels, wherein the plurality of desired channels are non-contiguous;
[1C]	processing, by a radio front end coupled to the input terminal, the input signal to generate a processed input signal;
[1D]	digitizing, by an analog-to-digital converter (ADC) coupled to the radio front end, the processed input signal to generate a digitized signal;
[1E]	selecting, by a digital frontend (DFE) coupled to the ADC, the plurality of desired channels from the digitized signal; and
[1F]	outputting, by the DFE, the selected plurality of desired channels to at least one demodulator as a digital datastream, wherein the demodulator extracts information encoded in the digital datastream.
Claim 2	
2	The method of claim 1, wherein the DFE outputs the digital datastream via a serial interface.
Claim 3	
3	The method of claim 1, wherein the DFE outputs the digital datastream via a parallel interface.
Claim 4	
4	The method of claim 1, wherein the ADC comprises: a first ADC configured to generate a digital in-phase signal; and a second ADC configured to generate a digital quadrature signal.
Claim 5	
5	The method of claim 1, wherein the extracted information is stored for use in a digital video recorder (DVR).

Designation	Claim Language
Claim 6	
6	The method of claim 1, wherein the extracted information is output for a picture-in-picture display.
Claim 7	
7	The method of claim 1, wherein the plurality of desired channels comprises at least one television channel.
Claim 8	
8	The method of claim 1, wherein the plurality of undesired channels comprises at least one television channel.
Claim 9	
9	The method of claim 1, wherein the broadcast channels comprise satellite broadcast channels.
Claim 10	
10	The method of claim 1, wherein the broadcast channels comprise cable broadcast channels.
Claim 11	
[11A]	A television receiver device, comprising:
[11B]	an input terminal operable to receive an input signal comprising broadcast channels, the broadcast channels comprising a plurality of desired channels and a plurality of undesired channels, wherein the plurality of desired channels are non-contiguous;
[11C]	a radio front end, coupled to the input terminal, operable to process the input signal;
[11D]	an analog-to-digital converter (ADC), coupled to the radio front end, operable to digitize the processed input signal to generate a digitized signal; and
[11E]	a digital frontend (DFE), coupled to the ADC, operable to select the plurality of desired channels from the digitized signal and
[11F]	output the selected plurality of desired channels to at least one demodulator as a digital datastream, wherein the demodulator is operable to extract information encoded in the digital datastream.
Claim 12	
12	The television receiver device of claim 11, wherein the DFE is operable to output the digital datastream via a serial interface.

Designation	Claim Language
Claim 13	
13	The television receiver device of claim 11, wherein the DFE is operable to output the digital datastream via a parallel interface.
Claim 14	
14	The television receiver device of claim 11, wherein the ADC comprises: a first ADC configured to generate a digital in-phase signal; and a second ADC configured to generate a digital quadrature signal.
Claim 15	
15	The television receiver device of claim 11, wherein the extracted information is stored for use in a digital video recorder (DVR).
Claim 16	
16	The television receiver device of claim 11, wherein the extracted information is output for a picture-in-picture display.
Claim 17	
17	The television receiver device of claim 11, wherein the plurality of desired channels comprises at least one television channel.
Claim 18	
18	The television receiver device of claim 11, wherein the plurality of undesired channels comprises at least one television channel.
Claim 19	
19	The television receiver device of claim 11, wherein the broadcast channels comprise satellite broadcast channels.
Claim 20	
20	The television receiver device of claim 11, wherein the broadcast channels comprise cable broadcast channels.