# United States Patent [19]

**Tenny**

[11] **3,968,444**

[45] **July 6, 1976**


[54] **SKIP BAND TUNER**


[75] Inventor: **Ralph F. Tenny,** Richardson, Tex.

[73] Assignee: **Texas Instruments Incorporated,** Dallas, Tex.



[22] Filed: **Nov. 11, 1974**

[21] Appl. No.: **522,675**

[52] **U.S. Cl.** ..... **325/470;** 325/453; 325/455; 325/459; 325/465

[51] **Int. Cl.**[2] ..... **H04B 1/32**

[58] **Field of Search** ..... 325/452, 453, 458, 459, 325/464–466, 468–470; 334/11, 14, 15; 340/147 C, 171 A, 168 R



[56] **References Cited**

UNITED STATES PATENTS

| | | | |
|---|---|---|---|
| 3,654,557 | 4/1972 | Sakamoto et al. | 325/465 |
| 3,818,353 | 6/1974 | Sakamoto | 325/470 |
| 3,822,405 | 7/1974 | Sakamoto | 325/464 |
| 3,839,678 | 10/1974 | Bell | 325/468 |
| 3,845,394 | 10/1974 | Hamada | 325/464 |



*Primary Examiner*—Robert L. Griffin
*Assistant Examiner*—Jin F. Ng
*Attorney, Agent, or Firm*—Harold Levine; James T. Comfort; James O. Dixon



[57] **ABSTRACT**

A digital tuning controller is provided which utilizes the storage of codes relating to the location and bandwidth of unused or illegal frequency bands to control a frequency acquisition operation with minimum circuitry.

A two digit keyboard entry corresponding to a selected channel number is stored. First counter means indicates a current channel location. Second counter means counts regularly spaced frequency markers produced as the band is scanned to increment the first counter. A comparator signals coincidence between the content of the first counter and the keyboard entry. A third counter counts the frequency markers for comparison with the current output state of a read only memory (ROM) having stored codes corresponding to the location and bandwidth of the unused frequency bands. Upon coincidence, the third counter is reset, the second counter is inhibited and the next succeeding location of the ROM is addressed to provide an output state indicating the bandwidth of the skip band. Upon coincidence again occurring between the ROM and the third counter, the second counter is activated to resume counting and the tuning operation continues until either another skip band is reached or the selected channel is acquired.


**18 Claims, 14 Drawing Figures**

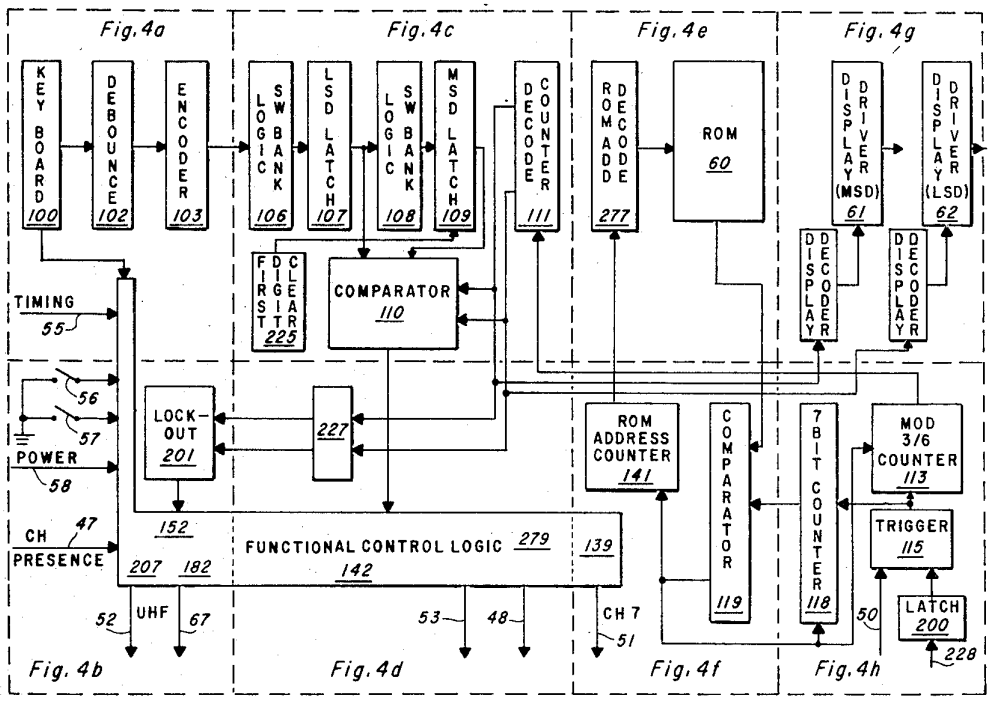

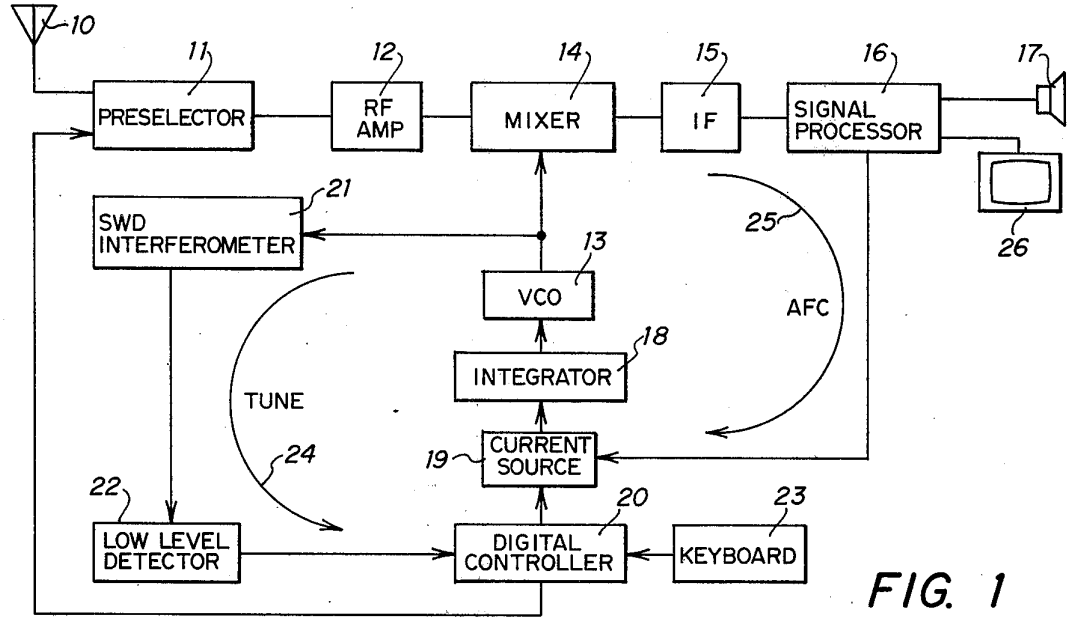
10
11
PRESELECTOR
12
RF AMP
14
MIXER
15
IF
16
SIGNAL PROCESSOR
17
26
21
SWD INTERFEROMETER
13
VCO
25
AFC
18
INTEGRATOR
TUNE
24
19
CURRENT SOURCE
22
LOW LEVEL DETECTOR
20
DIGITAL CONTROLLER
23
KEYBOARD

FIG. 1

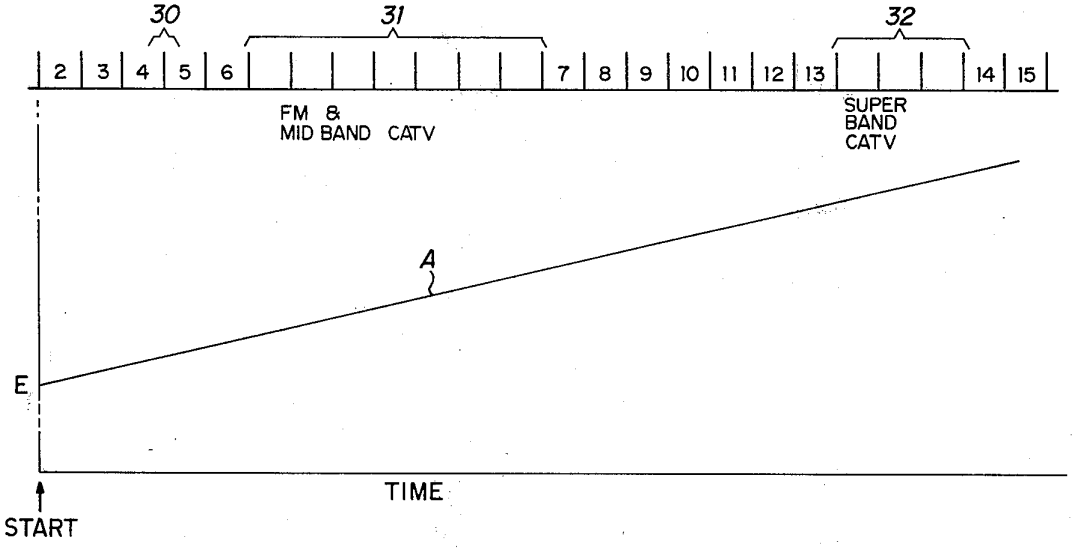
30
31
32
2
3
4
5
6
7
8
9
10
11
12
13
14
15
FM & MID BAND CATV
SUPER BAND CATV
A
E
TIME
START

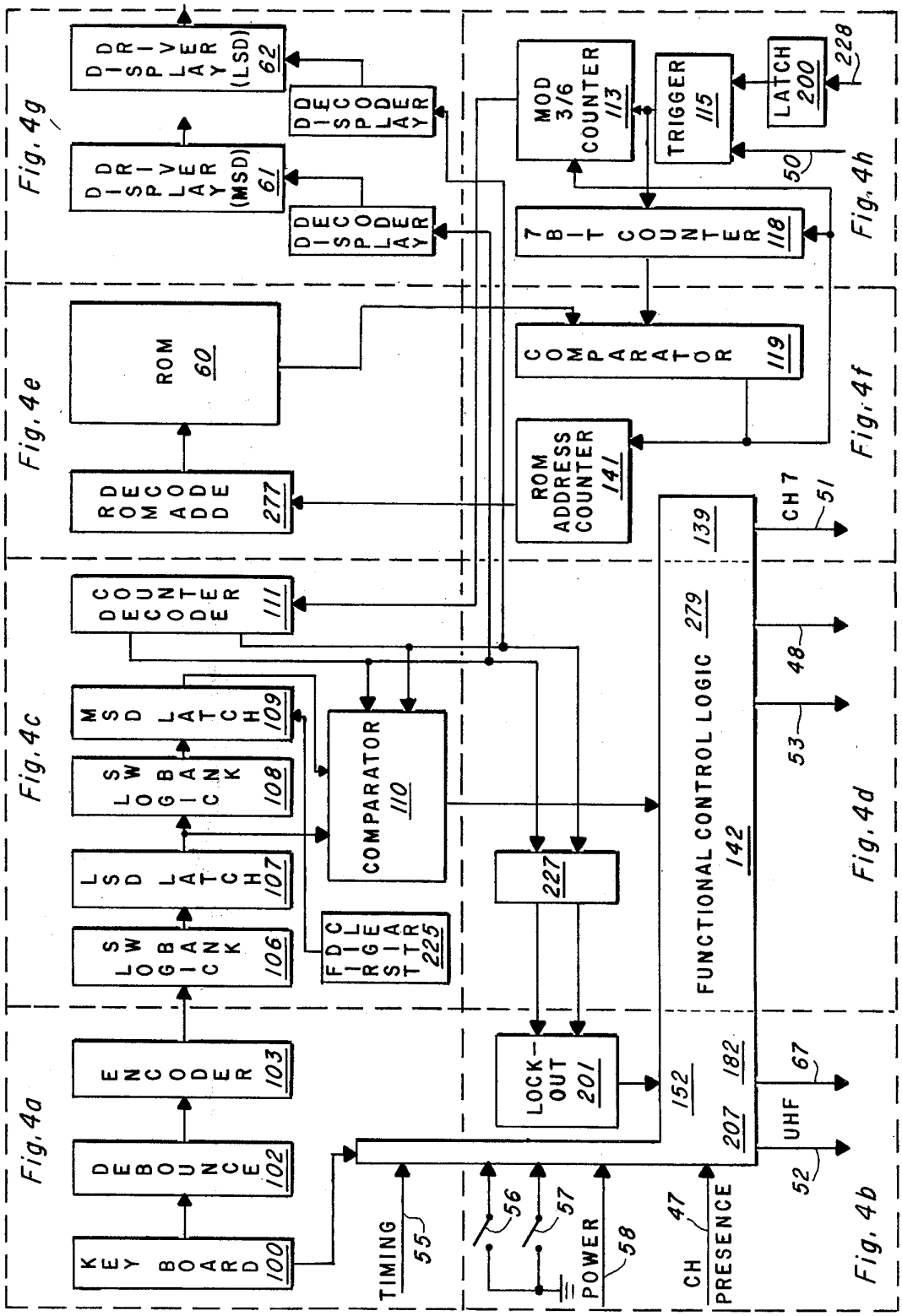
Fig. 3
Fig. 4a
Fig. 4b
Fig. 4c
Fig. 4d
Fig. 4e
Fig. 4f
Fig. 4g
Fig. 4h
KEY BOARD 100
DEBOUNCE 102
ENCODER 103
SW LOGIC BANK 106
LSD LATCH 107
SW LOGIC BANK 108
MSD LATCH 109
COUNTER DECODER 111
COMPARATOR 110
FDC LIGEAR STTR 225
ROM ADDRESS COUNTER 141
COMPARATOR 119
7 BIT COUNTER 118
MOD 3/6 COUNTER 113
TRIGGER 115
LATCH 200
228
50
ROM 60
ROM ADDRESS DECODE 277
DDRIVER DISPLAY (MSD) 61
DDRIVER DISPLAY (LSD) 62
DDECODER DISPLAY
DDECODER DISPLAY
FUNCTIONAL CONTROL LOGIC 142
279
139
227
LOCK-OUT 201
152
182
207
CH 7
51
48
53
UHF
67
52
TIMING
55
56
57
POWER
58
CH PRESENCE
47

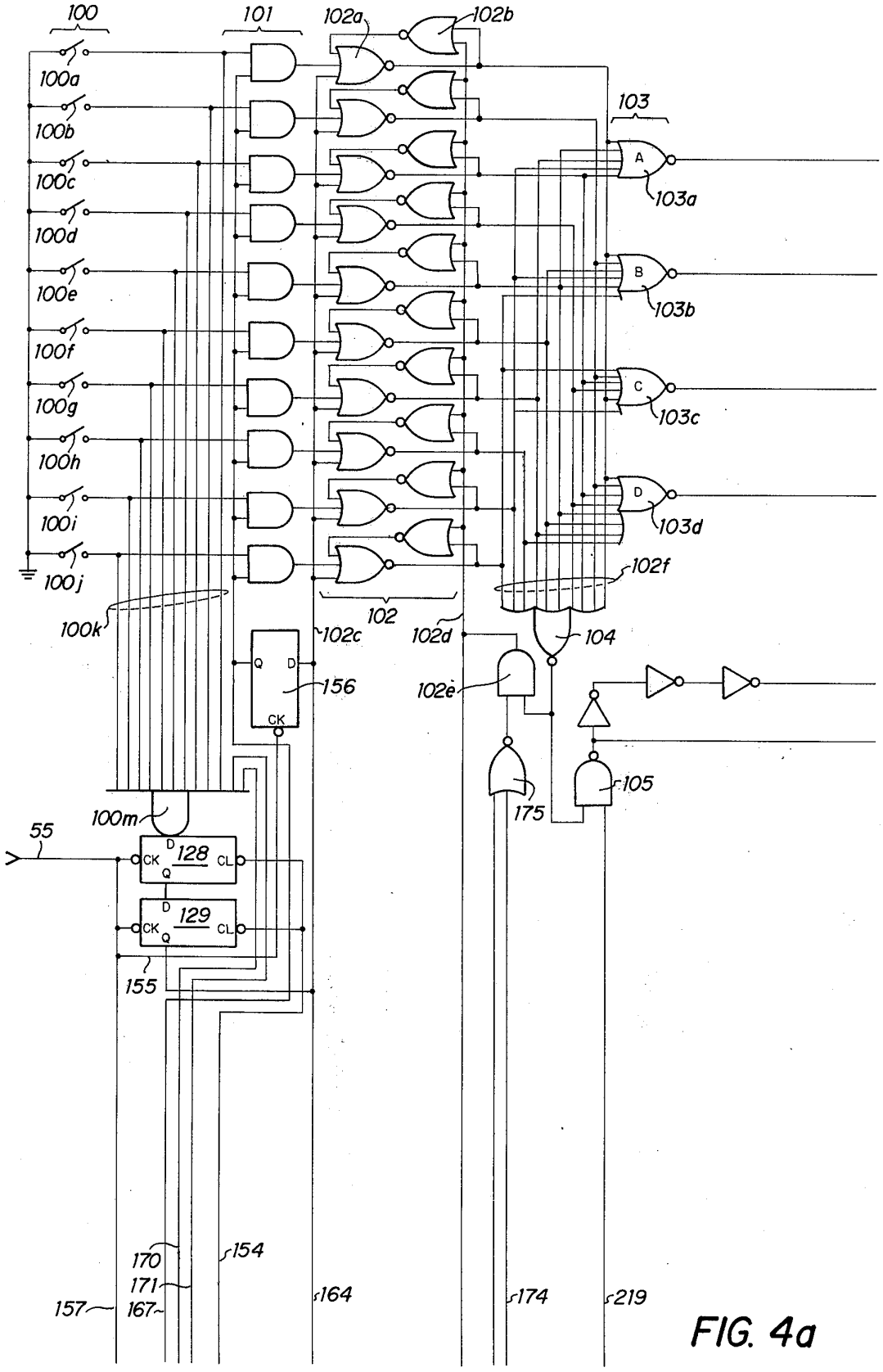
100
101
102a
102b
103
100a
100b
100c
100d
100e
100f
100g
100h
100i
100j
100k
A
B
C
D
103a
103b
103c
103d
102f
102
102c
102d
104
Q
D
CK
156
102e
175
105
100m
55
128
129
CL
155
170
171
157
167
154
164
174
219

FIG. 4a

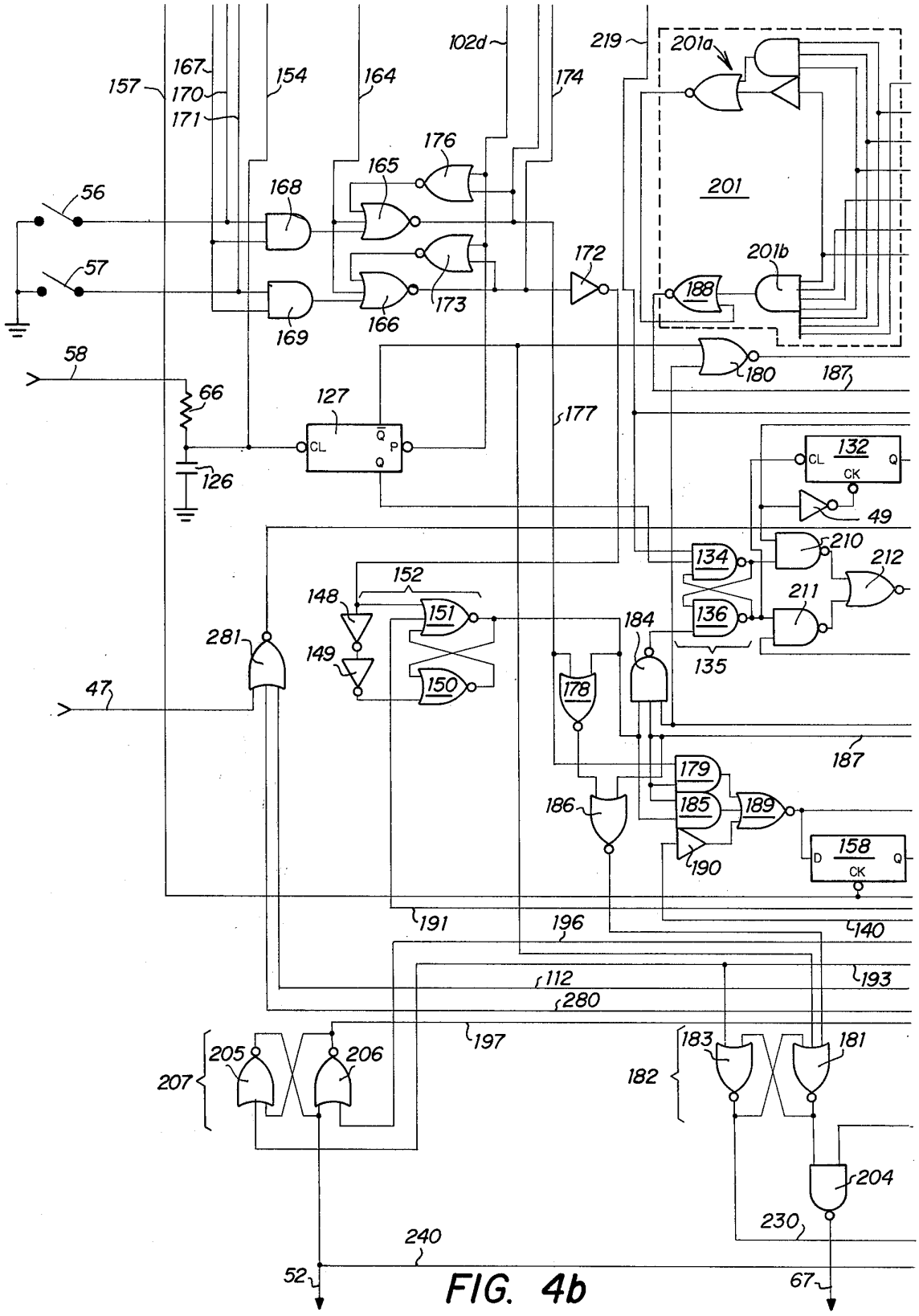
56
57
58
66
126
127
CL
Q
P
Q
157
167
170
171
154
164
102d
174
219
201a
201
201b
188
176
165
168
173
166
169
172
180
187
177
132
CL
CK
Q
49
210
212
211
134
136
135
152
148
149
151
150
281
47
184
178
179
185
189
186
190
158
D
CK
Q
191
196
140
112
193
280
197
205
206
207
183
181
182
204
230
240
52
67

FIG. 4b

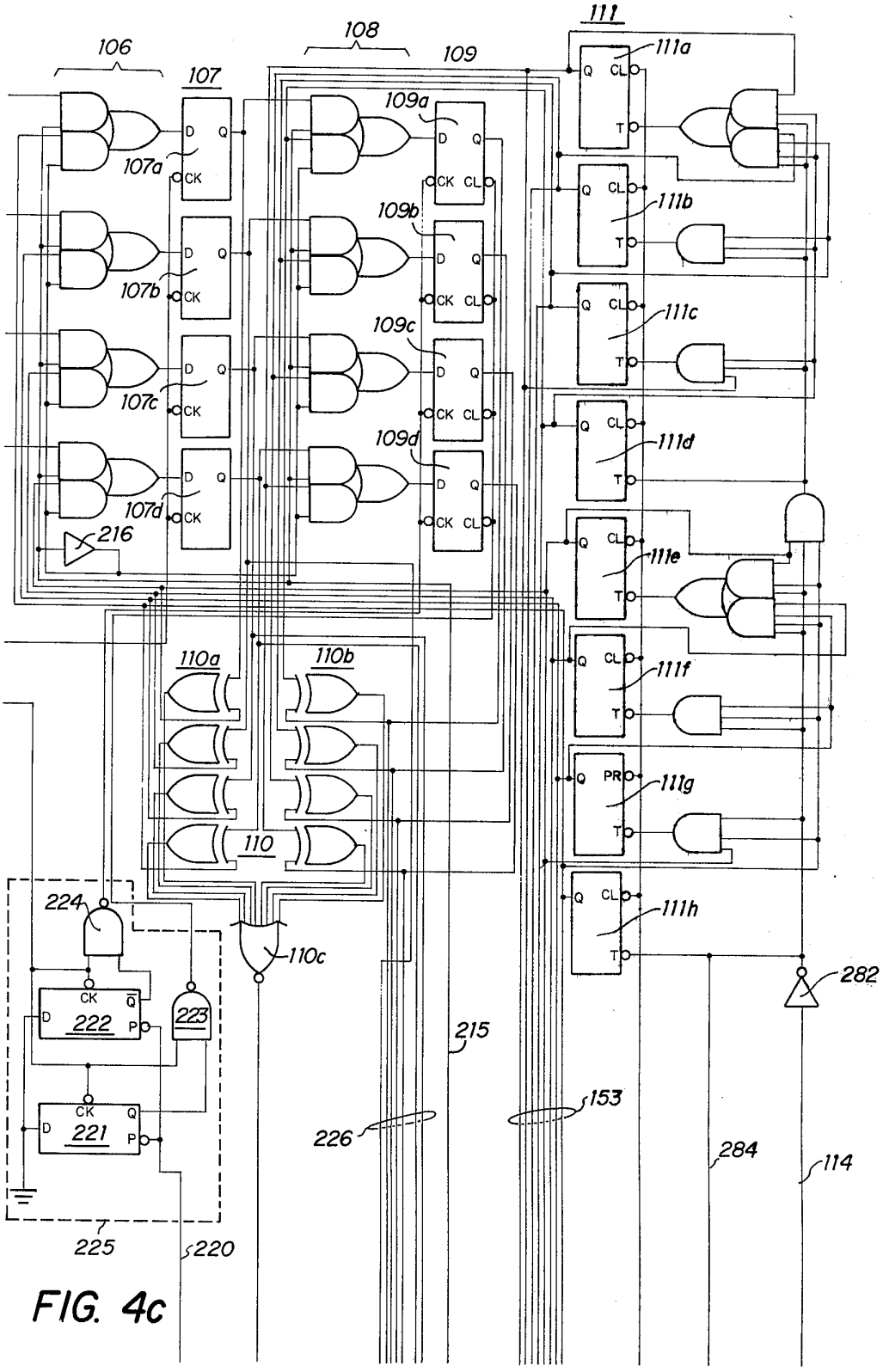
106
107
108
109
111
107a
107b
107c
107d
109a
109b
109c
109d
111a
111b
111c
111d
111e
111f
111g
111h
110a
110b
110
110c
216
224
222
221
223
225
220
215
226
153
284
114
282
D
Q
CK
CL
PR
T
P

FIG. 4c

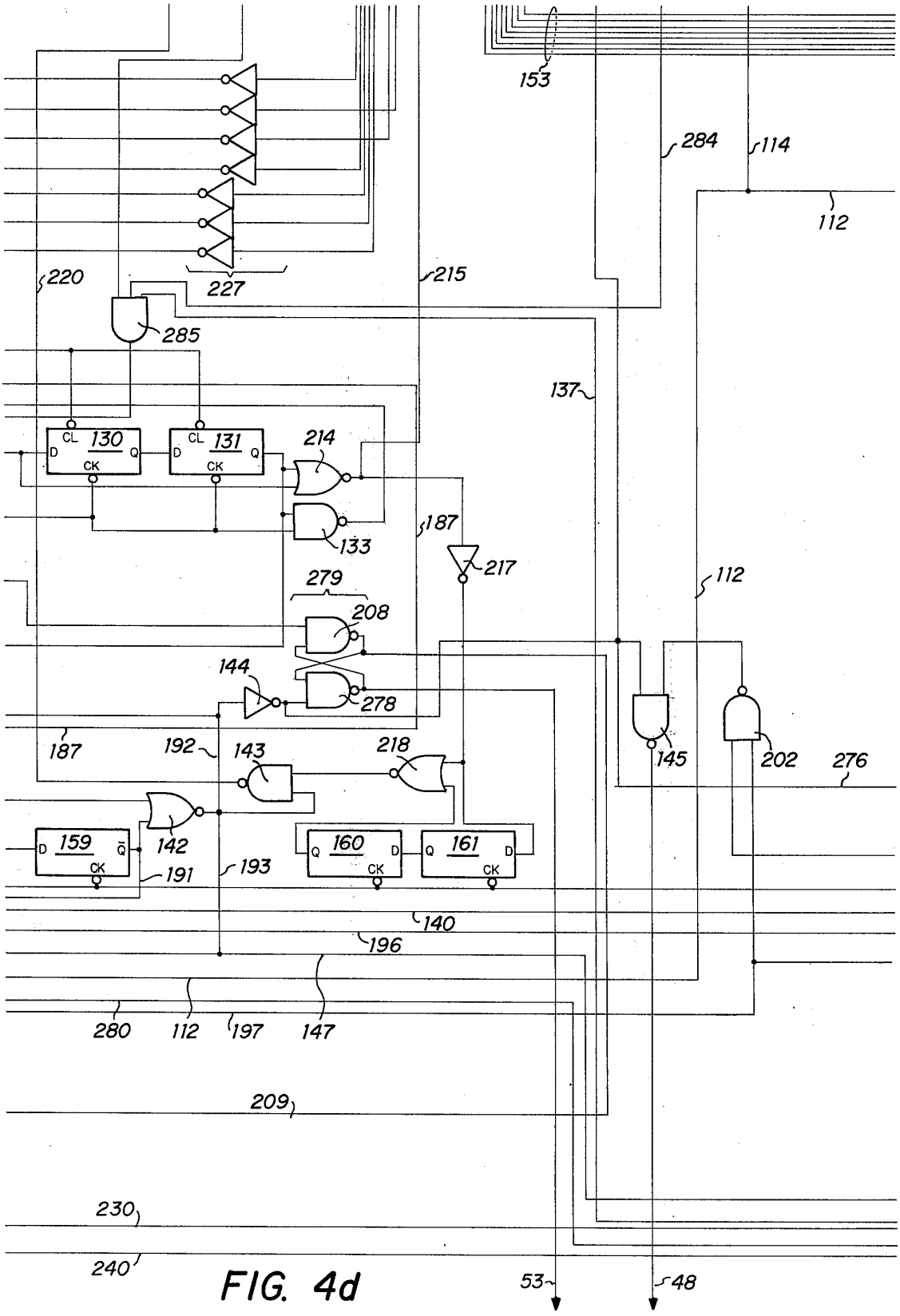
153
284
114
112
220
227
215
285
137
CL
130
D
Q
CK
CL
131
D
Q
CK
214
133
187
217
112
279
208
144
278
187
192
143
218
145
202
276
159
D
Q̄
CK
142
191
193
160
Q
D
CK
161
Q
D
CK
140
196
280
112
197
147
209
230
240
53
48

FIG. 4d

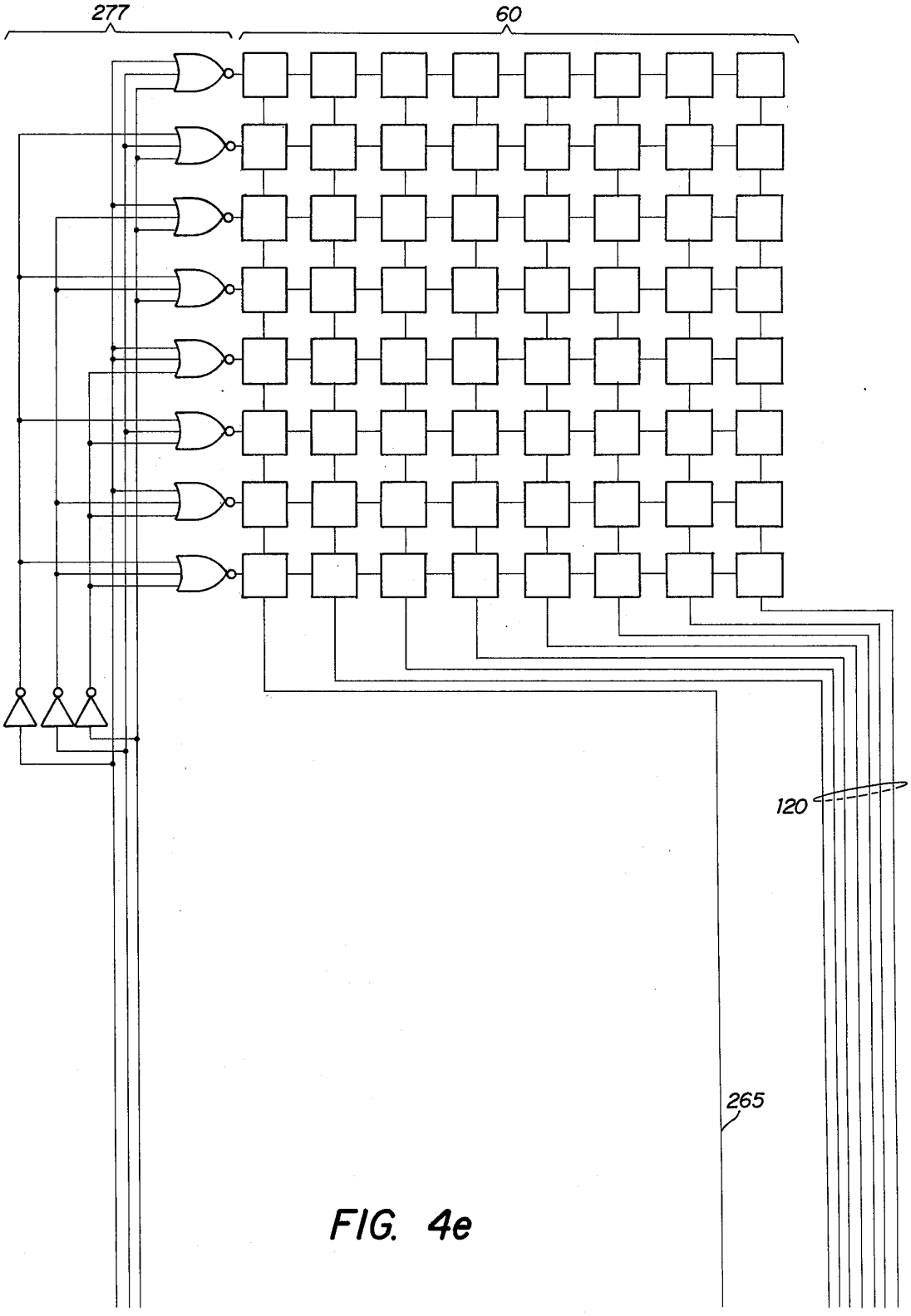


FIG. 4e

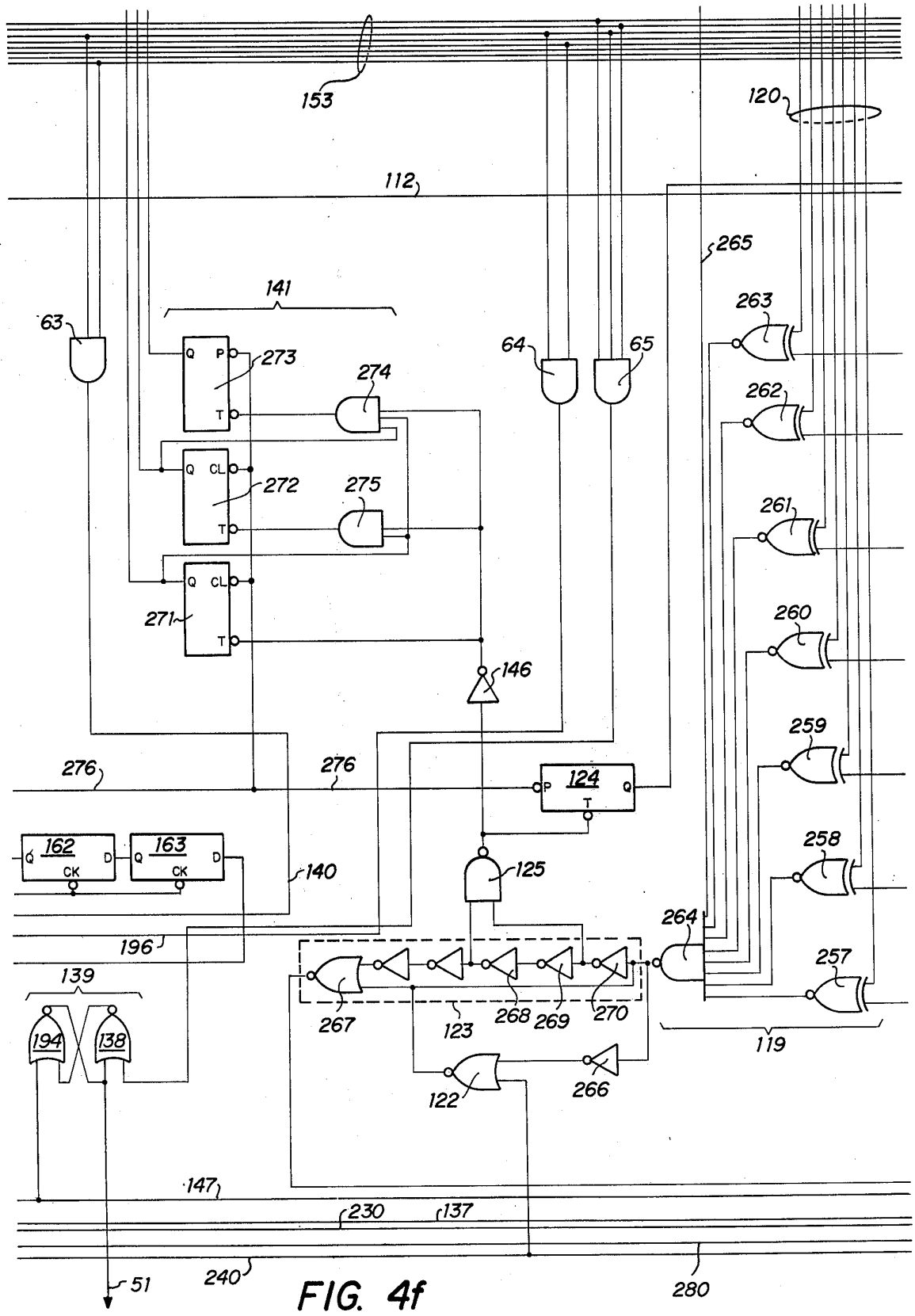
153
120
112
265
141
63
64
65
263
262
261
260
259
258
257
273
274
272
275
271
146
276
276
124
162
163
140
125
196
264
139
194
138
267
123
268
269
270
119
122
266
147
230
137
51
240
280

FIG. 4f

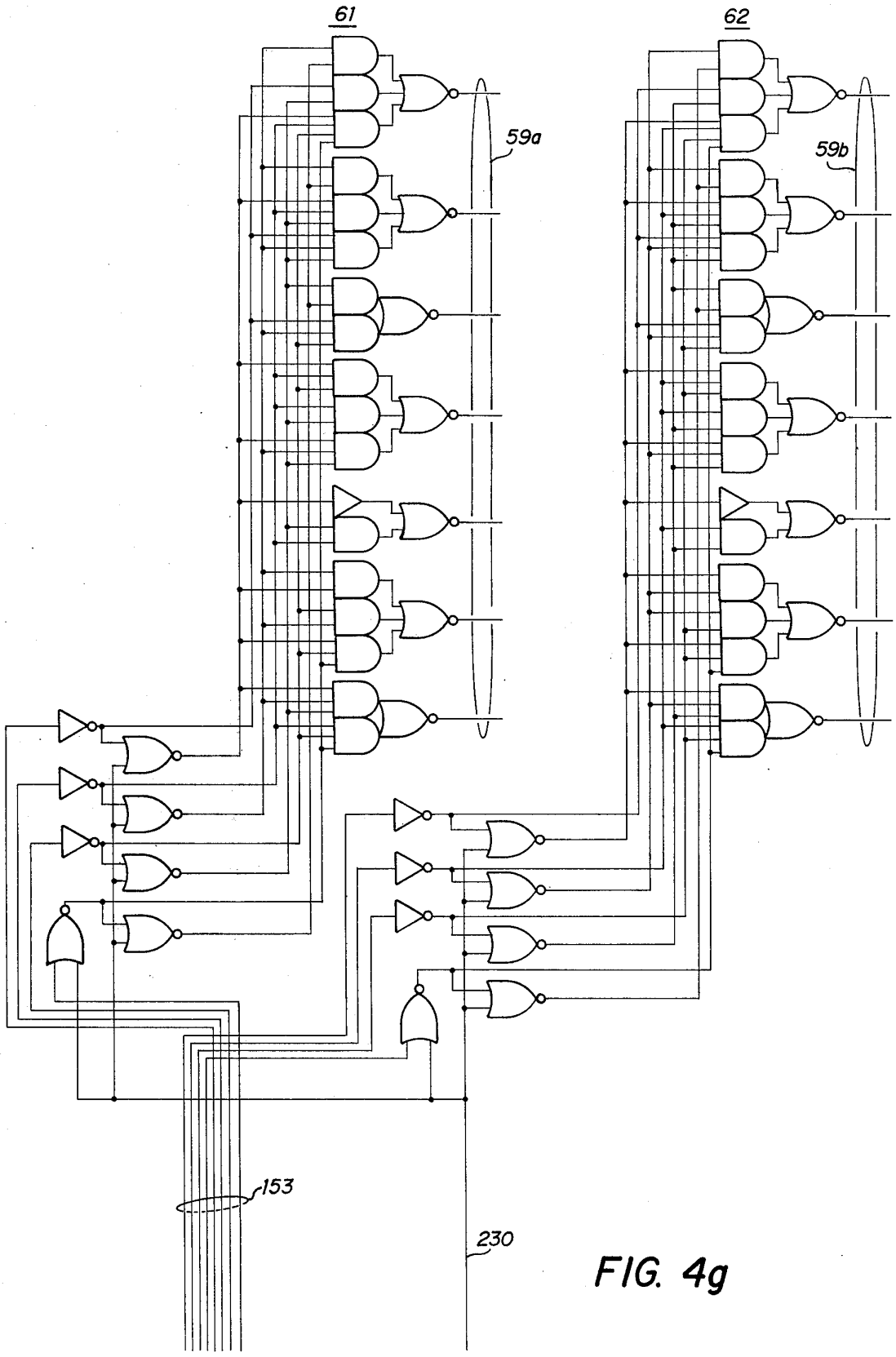


FIG. 4g

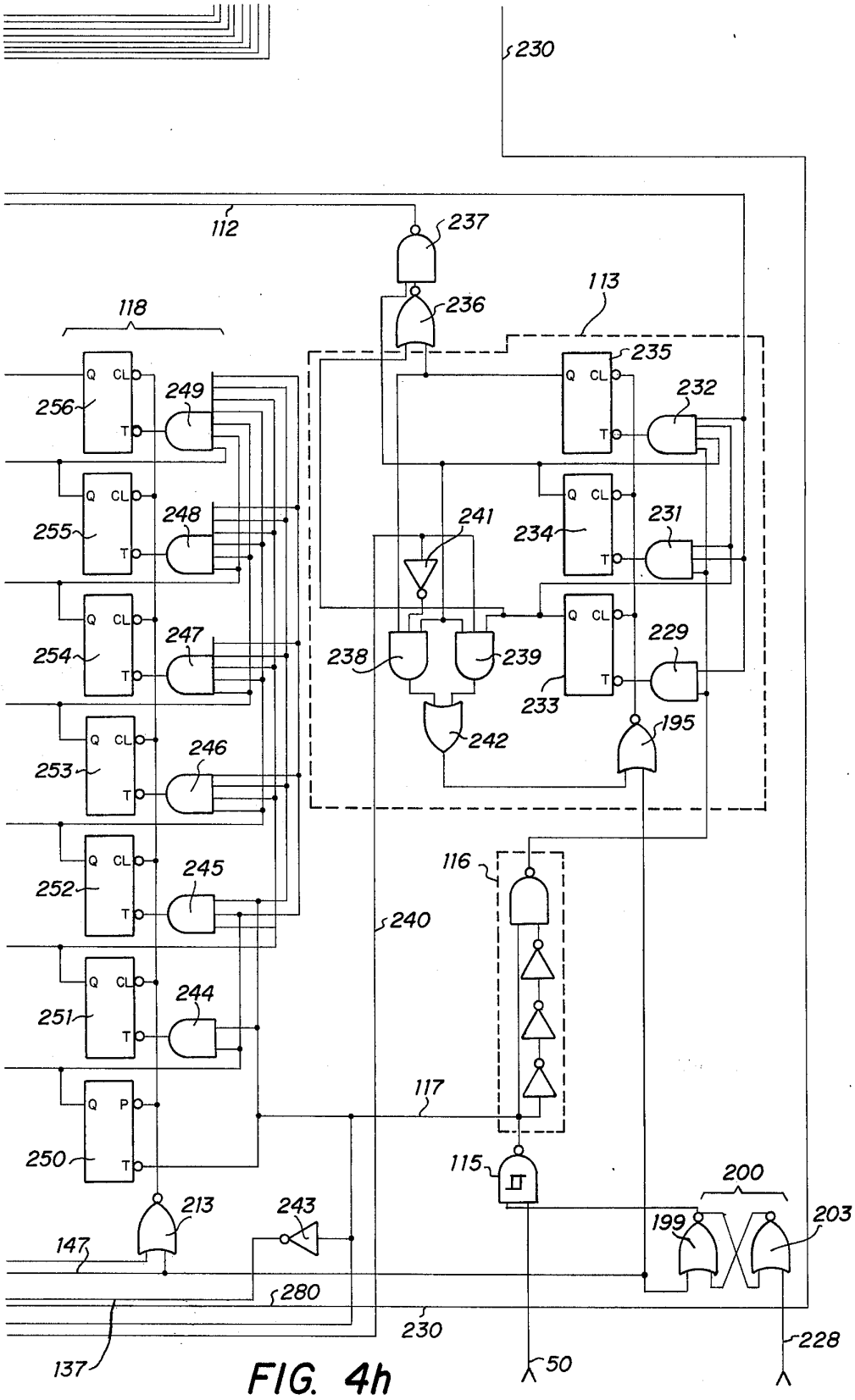
230
112
237
236
113
118
235
232
249
256
248
255
241
234
231
247
254
238
239
229
233
242
195
246
253
245
252
116
240
244
251
117
250
115
200
213
243
199
203
147
280
230
228
137
50

FIG. 4h

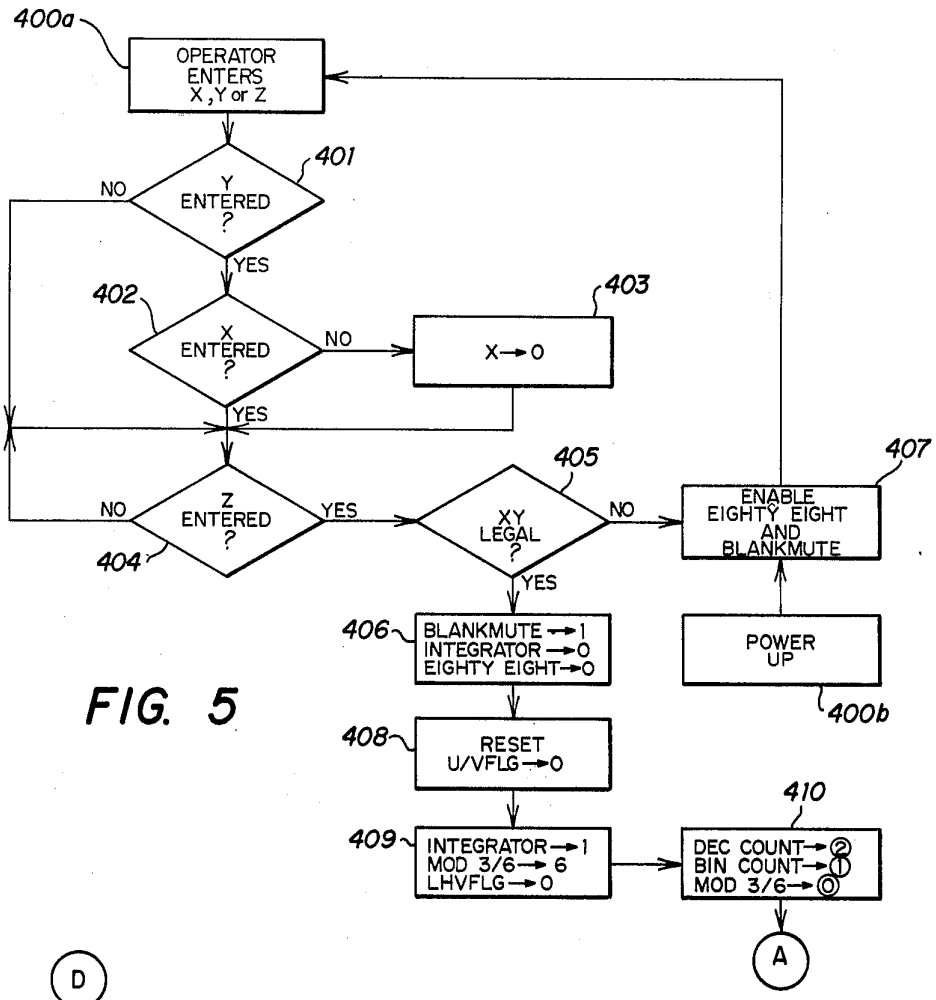
400a
OPERATOR ENTERS X, Y or Z
401
Y ENTERED ?
NO
YES
402
X ENTERED ?
NO
YES
403
X→0
Z ENTERED ?
NO
YES
404
405
XY LEGAL ?
NO
YES
407
ENABLE EIGHTY EIGHT AND BLANKMUTE
POWER UP
400b
406
BLANKMUTE →1
INTEGRATOR →0
EIGHTY EIGHT→0
408
RESET U/VFLG→0
409
INTEGRATOR→1
MOD 3/6→ 6
LHVFLG→0
410
DEC COUNT→2
BIN COUNT→1
MOD 3/6→0
A

FIG. 5

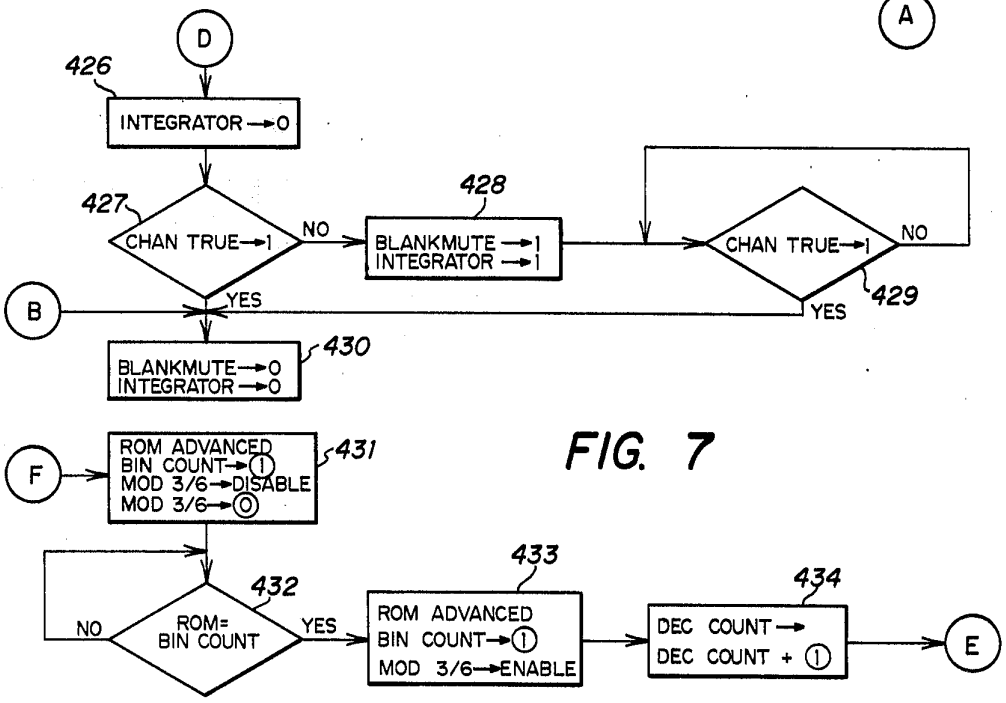
D
426
INTEGRATOR →0
427
CHAN TRUE→1
NO
YES
428
BLANKMUTE →1
INTEGRATOR →1
CHAN TRUE→1
NO
YES
429
B
430
BLANKMUTE→0
INTEGRATOR →0
F
431
ROM ADVANCED
BIN COUNT→1
MOD 3/6→DISABLE
MOD 3/6→0
432
ROM= BIN COUNT
NO
YES
433
ROM ADVANCED
BIN COUNT→1
MOD 3/6→ENABLE
434
DEC COUNT →
DEC COUNT + 1
E

FIG. 7

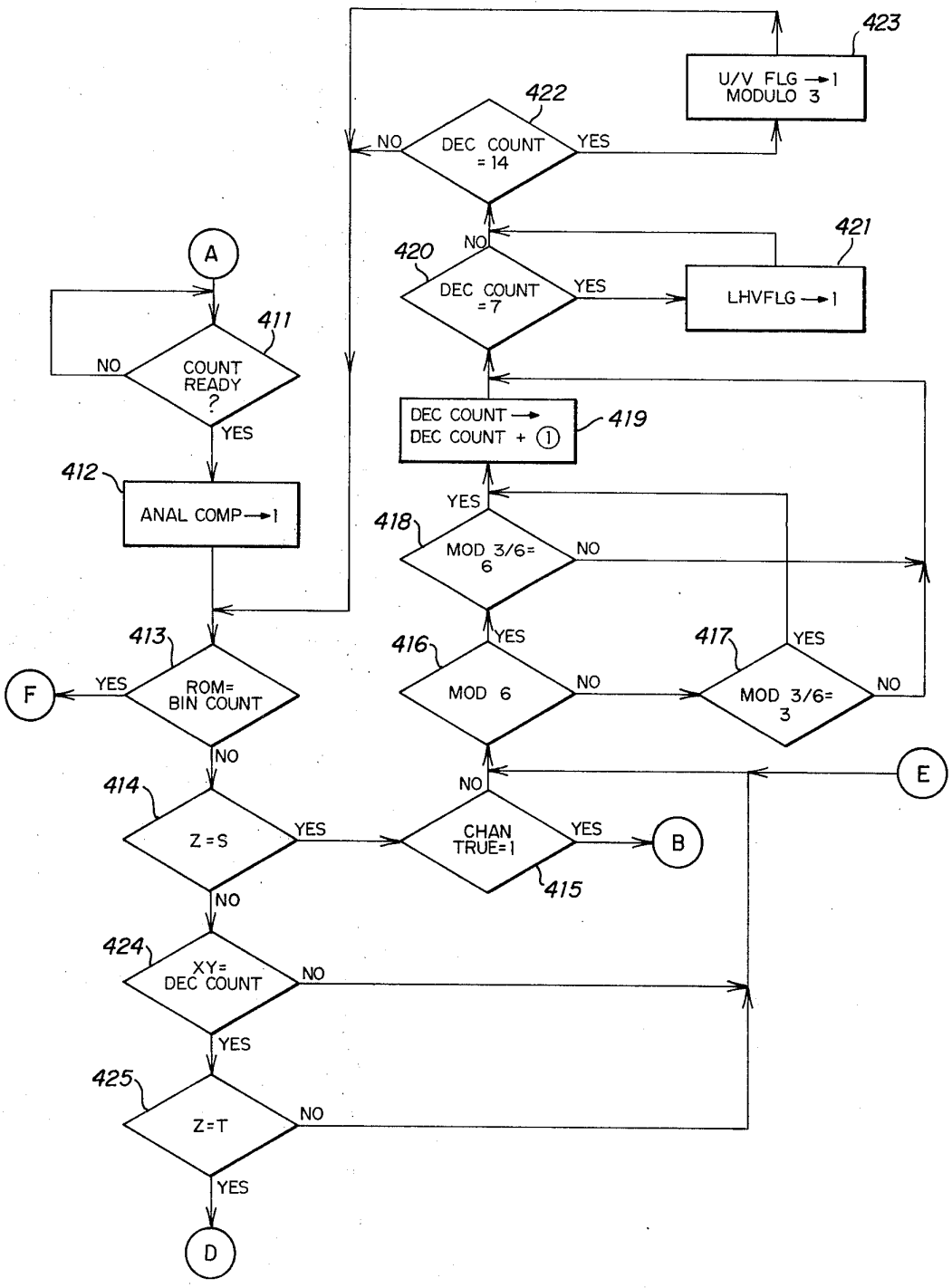
423
U/V FLG → 1
MODULO 3
422
DEC COUNT
= 14
NO
YES
421
420
NO
DEC COUNT
= 7
YES
LHVFLG → 1
A
411
COUNT
READY
?
NO
YES
DEC COUNT →
DEC COUNT + 1
419
412
ANAL COMP → 1
YES
418
MOD 3/6=
6
NO
413
416
YES
417
YES
F
YES
ROM=
BIN COUNT
MOD 6
NO
MOD 3/6=
3
NO
NO
E
414
NO
Z = S
YES
CHAN
TRUE=1
YES
B
415
NO
424
XY=
DEC COUNT
NO
YES
425
Z=T
NO
YES
D

FIG. 6

## SKIP BAND TUNER

### FIELD OF THE INVENTION

This invention relates to automatic tuning of receiver systems such as television, and more particularly to circuit minimization in scanning a band in which a selected channel is located. In a more specific aspect, the invention involves the ROM storage of channels to be skipped and controls utilizing such storage.

### PRIOR ART

In the transmission of television signals in the United States, the VHF channels 2–13 are not in continuous sequence, but rather have interspersed therein other allocations not related to television transmission. In addition, the VHF and UHF bands are separated by a band of frequencies devoted to other than television transmission.

Further, as is well known, the VHF band and the UHF band have channel allocations of a 6 MHz bandwidth per channel as shown in the following Table.

TABLE I

| VHF Channel | Freq. Band | Picture Freq. |
|---|---|---|
| 2 | 54–60 MHz | 55.25 MHz |
| 3 | 60–66 | 61.25 |
| 4 | 66–72 | 67.25 |
| 5 | 76–82 | 77.25 |
| 6 | 82–88 | 83.25 |
| FM | 88–108 | |
| Midband CATV | 108–174 | |
| 7 | 174–180 | 175.25 |
| 8 | 180–186 | 181.25 |
| 9 | 186–192 | 187.25 |
| 10 | 192–198 | 193.25 |
| 11 | 198–204 | 199.25 |
| 12 | 204–210 | 205.25 |
| 13 | 210–216 | 211.25 |
| Superband CATV | 216–290 | |
| UHF Channel | Freq. Band | Picture Freq. |
| 14 | 470–476 | 471.25 |
| — | — | — |
| — | — | — |
| — | — | — |
| 69 | 800–806 | 801.25 |
| Land Mobile | 806–890 | |

In tuning a superheterodyne receiver in the VHF or UHF ranges, it is necessary to provide a local oscillator having a variable frequency output. Further, it is desirable that the selection of a given local oscillator frequency be accomplished by actuation of relatively simple keyboard inputs.

In systems such as disclosed in U.S. application Ser. No. 504,626, filed Sept. 9, 1974, entitled "Frequency Selection and Control" and assigned to the assignee of the present application, tuning involves the variation in the output of a local oscillator to produce an output pulse at 1.0 MHz intervals as the oscillator frequency sweeps over the band of interest. The output pulses have been colloquially described as fence posts which provide frequency scale markers regularly spaced across the band over which the oscillator operates. The pulses or fence posts are counted during each tuning operation as the oscillator sweeps upward from a reference point at a lower end of the VHF channel.

A keyboard input addresses a ROM having stored therein codes corresponding to the location of each available channel relative to the reference point. More particularly, each code specifies the number of fence posts between a selected channel and the reference point. A comparator then is utilized to transfer control of the oscillator output from a tuning mode to an automatic frequency control (AFC) mode when the count of the fence posts corresponds with the code for the desired channel.



It will be noted from Table I that there is a skip band of 4.0 MHz between channels 4 and 5 and that there is a skip band between channels 6 and 7 from 88 MHz to 174 MHz. Prior systems provide encoding of each of the frequencies of the channels to which tuning is to be accomplished, but ignore these frequencies within the skip bands.

The present invention is directed toward minimization of the size of the ROM used for storage of tuning information. If the number of stations to be selected is large, as is generally the case, compared with the number of channels that are to be ignored or not used in a given operation, then a relatively small size read only memory (ROM) can be employed to encode only the frequencies that are to be skipped. This results in a significant minimization of the circuitry involved in the tuning operation.

### SUMMARY OF THE INVENTION

The present invention is directed to a digital tuning controller which employs stored indicia relating to the location and size of unused frequency bands in a field of operation to direct a frequency acquisition process.

More particularly, regularly spaced frequency markers produced from the variable output of a local oscillator are counted to signal the proximity of succeeding channels, and the aggregate is compared with the stored indicia to identify unused frequency bands. When the lower frquency boundary of an unused band is acquired, the acquisition process is suspended until the local oscillator is driven to the upper boundary of the band, as determined from a comparison between the stored indicia and counted frequency markers. The acquisition process then continues until either a selected frequency is acquired or another unused band is confronted.

In a preferred embodiment, there is provided a digital tuning controller having a modulo 3/6 binary counter for signaling the outer frequency boundaries of channel allocations, a decade counter incremented by the modulo 3/6 counter and indicating the current channel location of a search or tune operation, an encoder receiving keyboard entries indicating selected channel numbers, and a comparator to signal a selected channel acquisition upon coincidence between the decade counter and the encoded input. There further is provided a read only memory (ROM) having stored therein codes relating to the location and size of unused or illegal frequency bands, a binary counter indicating the frequency interval of separation between a current frequency location and a reference frequency, and a comparator to signal a coincidence between the binary counter and a current output state of the ROM. The lower boundary of an unused frequency band is identified upon coincidence, and the count of the modulo 3/6 counter is suspended until the upper boundary of the unused band is similarly identified.

### DESCRIPTION OF THE DRAWINGS

The novel features believed characteristic of the invention are set forth in the appended claims. The invention itself, however, as well as further objects and advantages thereof, will best be understood by refer-

ence to the following detailed description of an illustrative embodiment taken in conjunction with the accompanying drawings, in which:

FIG. **1** is a block diagram of a system embodying the invention;

FIG. **2** illustrates local oscillator frequency variation involved in operating the present invention;

FIG. **3** is a map of FIGS. **4***a*–**4***h* showing in block diagram form the location and interconnection of the principal elements in those figures;

FIGS. **4***a*–**4***h* illustrate a control circuit in large size integrated circuit form for practicing the invention; and

FIGS. **5**–**7** illustrate a flow diagram for an embodiment of a system of the type shown in FIGS. **4***a*–**4***h*.

## DESCRIPTION OF PREFERRED EMBODIMENTS

Referring to FIG. **1**, a television tuning system is illustrated which embodies the present invention. A signal from an antenna **10** is passed through a preselector **11**, an RF amplifier **12**, and thence to a mixer **14**. The mixer **14** is provided with a second input from a voltage controlled oscillator **13**. The output of the mixer is applied to an IF strip **15**, within which the product signal from mixer **14** is amplified and filtered in accordance with conventional techniques. The output of IF strip **15** then is applied to a conventional signal processing unit **16**, which in turn applies an audio signal to a speaker **17** and a video signal to a display tube **26**.

The oscillator **13** is a voltage controlled oscillator (VCO) which is varied in frequency by the output of an integrator **18**. The integrator in turn is controlled by the output of a current source **19**, the duty cycle of which is controlled by a digital controller **20** embodying the present invention.

The output of VCO **13** is also applied to an SWD interferometer **21**, which is a surface wave device so connected and operated in the system as to produce output markers at selected frequencies across the band over which VCO **13** is caused to sweep. More particularly, as disclosed in U.S. application Ser. No. 504,626, filed Sept. 9, 1974, and assigned to the assignee of the present application, interferometer **21** comprises an SWD having two output channels characterized by predetermined differential delays of the VCO **13** signal. The SWD signals are applied to the inputs of a summing amplifier which in turn supplies a signal to a low level detector **22**. The detector **22** thus provides output markers corresponding to the edges of frequency windows through which VCO output signal **13** passes in response to control by integrator **18**. In the preferred embodiment described herein, the output markers are produced at regular 1.0 MHz frequency intervals as the oscillator sweeps across a range of frequencies. The frequency markers so produced are applied to digital controller **20** to conduct a search upward from channel 2 to acquire the channel selected by depressing keys at keyboard **23**.

When a selected channel frequency has been acquired, control of current source **19** is transferred from tune loop **24** to AFC loop **25**. More particularly, control of the current source **19** transfers from digital controller **20** to signal processor **15** to track the selected signal.

In operation, a channel is selected by depressing keys at keyboard **23**, whereupon digital controller **20** sets a broad bandpass filter at preselector **11** for either VHF or UHF reception. A composite signal including frequency modulated audio and amplitude modulated video signals is received by antenna **10** and applied through preselector **11** and RF amplifier **12** to mixer **14**.



Upon initiating a tune command, digital controller **20** is reset to begin an upward search from channel 2. During the tuning operation, the duty cycle of current source **19** is controlled by digital controller **20** to drive integrator **18**, which in turn applies a ramp voltage to VCO **13**. In response to the ramp voltage, the VCO **13** output frequency sweeps upward from channel 2 and through the VHF and UHF bands.

The output of VCO **13** is processed by interferometer **21** and detector **22** to produce output pulses at regular frequency intervals which are counted by digital controller **20**. As the allocated channel frequencies are spaced 6.0 MHz apart, a new channel is indicated each time a number of frequency markers corresponding to a 6.0 MHz interval have been counted.

The output frequency of VCO **13** thus continues to sweep upward, and the frequency markers from detector **22** continue to be counted until the number of 6.0 MHz intervals corresponds to the channel number entered at keyboard **23**. Acquisition of the selected channel is then indicated, and control of current source **19** transfers from tune loop **24** to AFC loop **25** to track the signal at the selected channel location.

With reference to FIG. **2**, the output voltage of integrator **18** varies as represented by curve A. In response, the frequency of oscillator **13** changes so that there will be a succession of channels to which the system is tuned. For convenience, these have been numbered as in Table I.

As channels for television reception span both the UHF band and the VHF band, certain of the bands **30**, **31** and **32** are to be skipped in the tuning operation. For example, a frequency set **32** to which interferometer **21** tunes the oscillator lies between the UHF and VHF bands. The frequencies within set **32** are not allocated to television transmission, and thus are to be skipped. Another frequency range to be skipped, set **31**, lies between VHF channels 6 and 7. Another frequency range to be skipped, set **30**, lies between channels 4 and 5.

Heretofore receiver systems have been provided utilizing control from a ramp generator such as integrator **18** to vary the frequency of a voltage controlled oscillator, as in said U.S. application Ser. No. 504,626. In such prior art systems, a ROM has been provided with stored data to address each of the many channels lying within a broadcast band. This has resulted in the necessity of a very large ROM. In contrast, and in accordance with the present invention, a digital controller is provided having a ROM with stored data corresponding only to those channels that are to be skipped. This permits automatic tuning through the entire broadcast band with use of a very small ROM which is actuated to skip sets of frequencies such as sets **30**, **31** and **32**.

FIGS. **4***a*–**4***h*, arranged as shown in FIG. **3**, illustrate in logic circuit form a system embodying the present invention. The system, employed as a digital controller in the receiver system of FIG. **1**, may be embodied as a large scale integrated circuit formed on a single MOS chip. However, it is to be understood that an interface chip may be required to communicate with peripherals exceeding the load capacity of the MOS chip.

More particularly, the system of FIGS. **4***a*–**4***h* comprises a keyboard **100** providing manual inputs for

channel selection. A least significant digit latch **107** and a most significant digit latch **109** store the channel number entered into keyboard **100.** A decade counter **111** indicates the current channel number to which the system is tuned. A read only memory (ROM) **60** has stored therein information corresponding to the location and bandwidth of frequency bands to be skipped. Conventional BCD to seven segment decoder/drivers **61** and **62** supply the channel number indicated by counter **111** to a two digit display (not shown). A modulo 3/6 counter **113** counts frequency markers supplied by an external analog comparator to increment counter **111.** A seven bit binary counter **118** also counts the frequency markers to compare with the output states of ROM **60.** A comparator **119** signals coincidence between the content of counter **118** and an output state of ROM **60.** A ROM address counter **141** increments an address decode circuit **277** addressing ROM **60.**

Considering the foregoing components in more detail, keyboard **100,** FIG. **4***a*, comprises ten switches **100***a*–**100***j* corresponding to the numerals 0–9, respectively. The closure of any one switch grounds the input to one of a set of AND gates **101.** The lines leading from the switches **100** to the AND gates **101** are also connected by way of lines **100***k* as inputs to an AND gate **100***m*. The outputs of AND gates **101** in turn are applied to a debounce circuit **102** comprising an array of ten NOR gates **102***a* and ten NOR gates **102***b*.

NOR gates **102***a* each have one input connected to one of the AND gates **101,** while the second inputs of each of the gates **102***a* are connected in parallel to line **102***c*. Each of the NOR gates **102***b* has one input connected to the output of one of the NOR gates **102***a*, and a second input supplied by way of line **102***d*. The state of line **102***d* is controlled by the output of an AND gate **102***e*, while the state of line **102***c* is controlled by the Q output of a flip-flop **129.**

The outputs of NOR gates **102***a* are also applied to an encoding circuit **103** comprising four NOR gates **103***a*, **103***b*, **103***c* and **103***d*, and by way of lines **102***f* to the input of a NOR gate **104.** Gate **104** is a strobe gate signaling the depression of a keyboard **100** switch. The output of gate **104** is applied as an input to AND gate **102***e* and a NAND gate **105.**

The outputs of NOR gates **103***a*–**103***d* in turn are applied through logic switch bank **106,** FIG. **4***c*, to the D inputs of a first latch **107** comprised of flip-flops **107***a*–**107***d*.

The Q outputs of flip-flops **107***a*–**107***d* are connected as inputs to a second logic switch bank **108,** the outputs of which are connected to the D inputs of a second latch **109** comprising flip-flops **109***a*–**109***d*. The latch **107** stores the least significant digit of a channel number selected at keyboard **100,** while latch **109** stores the most significant digit of the selected channel number.

The Q outputs of the flip-flops **107***a*–**107***d* also are connected as inputs to an array of four exclusive OR gates **110***a* forming a least significant digit part of a comparator **110,** and as inputs to a lockout circuit **201,** FIG. **4***b*. Second inputs to each of the exclusive OR gates **110***a* are supplied by the Q outputs of flip-flops **111***e*–**111***h* forming a least significant digit register of a decade counter **111.**

The Q outputs of flip-flops **109***a*–**109***d* are connected as inputs to an array of four exclusive OR gates **110***b* forming a most significant digit part of comparator **110,** and as inputs to lockout circuit **201.** Second inputs to each of the exclusive OR gates **110***b* are supplied by the Q outputs of flip-flops **111***a*–**111***d* forming a most significant digit register of decade counter **111.**

The outputs of each of the exclusive OR gates **110***a* and **110***b* are connected as inputs to a NOR gates **110***c*. Exclusive OR gates **110***a* and **110***b* together with NOR gate **110***c* comprise comparator **110.** Upon coincidence occurring between the numbers stored in latches **107** and **109** and the numbers stored in decade counter **111,** the output of NOR gate **110***c* is raised to a logic one level.

As before described, the Q output of latches **107** and **109** supply inputs to lockout circuit **201.** More particularly, the Q outputs of flip-flops **107***b*–**107***d* and flip-flops **109***a*–**109***d* are connected by way of lines **226** through a bank of seven inverters **227,** FIG. **4***d*, to the inputs of logic switch **201***a* and AND gate **201***b*. The outputs of logic switch **201***a* and AND gate **201***b* in turn are applied as inputs to NOR gate **188.** Lockout circuit **201** is utilized to prevent either tuning or searching to an illegal or unused TV channel, including channels 0, 1, or 84–99 inclusive. When an illegal channel is selected, the output of NOR gate **188** transitions from a normal logic one state to a logic zero state to inhibit system reset and thus prevent a search or tune operation.

Referring to counter **111,** FIG. **4***c*, the Q output of flip-flops **111***a*–**111***h* are also applied by way of lines **153** to conventional BCD to seven segment decoder/driver circuits **61** and **62,** FIG. **4***g*. Driver circuits **61** and **62** in turn drive two digit display indicating a channel of operation corresponding to the contents of decade counter **111.** More particularly, circuit **61** drives a most significant digit display by way of output lines **59***a*, while circuit **62** drives a least significant digit display by way of output lines **59***b*. As circuits **61** and **62** are fully disclosed at page **176** of the publication by Texas Instruments Incorporated entitled "The TTL Data Book for Design Engineers", First Edition, Copyright 1973, the circuits are not described in further detail herein.

The Q outputs of flip-flops **111***a* and **111***f* are also connected by way of lines **153** as inputs to AND gate **63,** FIG. **4***f*. When the number in decade counter **111** is equal to the numeral 84 corresponding to channel 84, the output of AND gate **63** is raised to a logic one level to signal that the allocated channel frequencies have been overreached.

In addition, the Q outputs of flip-flops **111***d* and **111***f* are connected by way of lines **153** to the inputs of an AND gate **64** to signal the transition from VHF channel 13 to UHF channel 14. Further, the Q outputs of flip-flops **111***f*, **111***g* and **111***h* are connected by way of lines **153** to the inputs of AND gate **65** to signal a channel 7 operation.

Power is applied to the system by way of a line **58,** FIG. **4***b*, which is connected to a resistor **66** in series with a capacitor **126** having one terminal at ground. The node intermediate to resistor **66** and capacitor **126** is connected to the clear input of a flip-flop **127,** and by way of a line **154** to the clear input of flip-flops **128** and **129.** In the quiescent state, capacitor **126** is discharged and thereby clears flip-flops **127, 128** and **129.** In the power-up state, however, when power is supplied by way of line **58** to charge capacitor **126,** flip-flops **127, 128** and **129** are free to operate under the command of either clock or preset signals.

Timing control for the sytem is derived from a 60 cycle vertical oscillator applying a timing signal by way

of line **55**, FIG. **4***a*, to the clock input of flip-flops **128** and **129**, by way of line **155** to the clock input of a flip-flop **156**, and by way of line **157** to the clock input of flip-flops **158**, **159**, **160**, **161**, **162** and **163**.

The D input of flip-flop **128** is supplied by AND gate **110***m*, and the Q output is applied to the D input of flip-flop **129**. The Q output of flip-flop **129** in turn is connected to the D input of flip-flop **156**, to one input each of NOR gates **102***a*, and by way of line **164** to an input of NOR gates **165** and **166**, FIG. **4***b*.

The Q output of flip-flop **156** is connected to a second input of AND gates **101**, and by way of line **167** to an input of AND gates **168** and **169**. A second input to AND gate **168** is connected to SPST switch **56** having a contact terminal connected to ground, and by way of line **170** to an input of AND gate **100***m*.

A second input to AND gate **169** is connected to SPST switch **57** having a contact terminal connected to ground, and by way of line **171** to an input of AND gate **100***m*. Switches **56** and **57** are depressed to initiate a tune or a search sequence, respectively.

AND gates **168** and **169** supply inputs to NOR gates **165** and **166**, respectively. The output of NOR gate **166** is connected as an input to a NOR gate **173**, which in turn supplies an input to NOR gate **166**. The output of NOR gate **166** is also applied by way of line **174** as an input to NOR gate **175**, and through an inverter **172** as an input to a flip-flop circuit **152**. The output of NOR gate **175** is connected as one input to AND gate **102***e*.

NOR gate **165** supplies an input to a NOR gate **176**, an input to a NOR gate **175**, and an input by way of line **177** to a NOR gate **178** and an AND gate **179**. NOR gate **176** in turn supplies an input to NOR gate **165**.

Flip-flop circuit **152**, FIG. **4***b*, comprises a latch circuit formed from NOR gates **150** and **151**, with an input from inverter **172** applied directly to gate **151** but delayed through inverters **148** and **149** as an input to gate **150**. The flip-flop circuit **152** supplies an input to NOR gate **178**, a NAND gate **184** and an AND gate **185**. The output of NOR gate **178** in turn is applied as an input to a NOR gate **186**, the output of which is applied as an input to a NOR gate **181**. A second input to NOR gate **186** is connected to a line **187** leading to an input of NAND gate **184**, to an input of AND gate **179**, and to an input of AND gate **185**. Also connected to line **187** is the output of a NOR gate **188**, a component part of lockout circuit **201**.

The $\overline{Q}$ output of flip-flop **127** is applied as an input to a NOR gate **180**, and to a NOR gate **181** of a latch circuit **182**. The present input to flip-flop **127** is connected to inputs of NOR gates **173** and **176**, and to line **102***d*. The Q output of flip-flop **127** is connected to one input of a NAND gate **134**, which is joined to a NAND gate **136** to form a latch circuit **135**.

The outputs of AND gates **179** and **185** are applied as inputs to a NOR gate **189**, the third input of which is supplied by AND gate **63** by way of line **140** through driver **190**.

The output of NOR gate **189** is applied to the D input of flip-flop **158** and to one input of NOR gate **142**. The Q output of flip-flop **158** is connected to the D input of flip-flop **159**, FIG. **4***d*, while the $\overline{Q}$ output of flip-flop **159** is connected directly to a second input of NOR gate **142** and by way of line **191** to an input of NOR gate **151**. Flip-flops **158** and **159** form a monostable multi-vibrator circuit with NOR gate **142**, the circuit being triggered by NOR gate **189**.

The output of NOR gate **142**, FIG. **4***d*, supplying a system reset pulse, is applied as an input to a NAND gate **143**, and by way of line **192** as an input to inverter **144**, NAND gate **184** and NOR gate **180**. The output of NOR gate **142** is also applied by way of line **193** as an input to NOR gate **183** and NOR gate **205**, by way of lines **193** and **147** as an input to a NOR gate **194**, a NOR gate **213**, and NOR gates **195** and **199**. In addition, NOR gate **142** supplies a reset pulse to the succeeding receiver system by way of lines **193** and **147** to output line **48**.

NOR gates **205** and **206** comprise a latch circuit **207** controlling the state of a line **52** to flag a transition from VHF operation to UHF operation. A second input to latch **207** is supplied by AND gate **64** along line **196** to an input of NOR gate **206**. The output of NOR gate **205** is connected to line **52**, while the output of NOR gate **206** is connected by way of line **197** to the D input of flip-flop **163** and to one input of a NAND gate **202**. The output of gate **202** in turn supplies a logic signal to trigger NAND gate **145** and flag a system reset condition on line **48**.

The Q output of flip-flop **163**, FIG. **4***f*, is connected to the D input of flip-flop **162**, and the Q output of flip-flop **162** is connected as a second input to NAND gate **202**. NAND gate **202** and flip-flop **162** and **163** comprise a monostable multivibrator.

While capacitor **126**, FIG. **4***b*, is in a discharged state, flip-flop **127** remains cleared with a $\overline{Q}$ output at a logic one state. The output of NOR gate **180** is thus at a logic zero state which is applied to the clear inputs of flip-flops **130** and **131**.

After power has been applied along line **58** to charge capacitor **126**, the depression of a switch at keyboard **100** will be signaled by the occurrence of a logic zero at the output of NOR gate **104**. The logic state of line **102***d* correspondingly drops to a logic zero and flip-flop **127** is preset. The Q output of flip-flop **127** is thus raised to a logic one state which is applied to NAND gate **134**.

The output of NAND gate **134**, FIG. **4***b*, is applied as an input to NAND gate **210**, while the output of NAND gate **136** is applied as an input to NAND gate **211** and the clear input of a flip-flop **132**. The outputs of NAND gates **210** and **211** in turn are applied as inputs to a NOR gate **212**. the output of which is connected to an input of NAND gate **208**, FIG. **4***d*. NAND gates **208** and **278** form a latch circuit **279**, while NAND gates **134** and **136** form a latch circuit **135**.

The output of NAND gate **136** is also applied to the clear input of a flip-flop **132**, the clock input of which is supplied by an AND gate **285** through an inverter **49**. The Q output of flip-flop **132** is applied to both the D input of flip-flop **130**, FIG. **4***d*, and an input of a NOR gate **214**.

The Q output of flip-flop **130** in turn is connected to the D input of flip-flop **131**, the Q output of which is connected as an input to NOR gate **214**, NAND gate **133**, and AND gate **211**.

The output of NAND gate **133** is applied to NAND gate **134** to reset latch **135** and is connected by line **219** to NAND gate **105**, FIG. **4***d*. NAND gate **105** supplies a clock pulse through three inverters to the clock inputs of latch **107**, and supplies an input to a first digit clear circuit **225**.

The output of NOR gate **214**, FIG. **4***d*, is applied along line **215** as an input to logic switch banks **106** and **108**, and as an input to inverter **216** supplying addi-

tional inputs to the logic switch banks. NOR gate **214** also supplies an input to inverter **217** which triggers a monostable multivibrator circuit comprising NOR gate **218** and flip-flops **160** and **161**.

More particularly, the output of inverter **217** is connected to an input of NOR gate **218** and to the $\overline{D}$ input of flip-flop **161**. The Q output of flip-flop **161** is connected to the D input of flip-flop **160**. the Q output of flip-flop **160** in turn is connected as an input to NOR gate **218**.

The output of NOR gate **218**, FIG. **4***d*, supplies an input to NAND gate **143**, the output of which is connected by way of line **220** to the preset input of flip-flops **221** and **222** of circuit **225**. The Q output of flip-flop **221** is applied as an input to a NAND gate **223**, the output of which is connected to the clear input of flip-flops **109***a*–**109***d*. The $\overline{Q}$ output of flip-flop **222** is connected as an input to a NAND gate **224** which supplies a clock signal to flip-flops **109***a*–**109***d*. The clock signals to flip-flops **221** and **222**, and second inputs to NAND gates **223** and **224** are supplied by NAND gate **105**. The D inputs of flip-flops **221** and **222** are connected in parallel to ground.

Flip-flops **221** and **222** and NAND gates **223** and **224** comprise circuit **225** which accommodates the entry of a single digit channel number at keyboard **100**. Thus, the depression of a second keyboard switch to enter a zero as a most significant digit in latch **109** is obviated.

When a system reset condition exists, NOR gate **142**, FIG. **4***d*, applies a pulse to inverter **144** and to NOR gate **194** as before described. The output of inverter **144** in turn is applied as an input to NAND gate **278** to change the state of latch circuit **279** which is comprised of NAND gates **208** and **278**.

The output of NAND gate **278** is applied along a line **53** to control the duty cycle of current source **19** of FIG. **1**. The output of NAND gate **208** is applied along line **209** as an input to a NAND gate **204**. A second input to gate **204** is supplied by latch circuit **182** by way of the output of NOR gate **181**. The output of gate **204** in turn may be applied by way of an output line **67** controlling the duty cycle of an external display.

The output of NOR gate **183** is applied by way of line **230** to the decode/driver circuits **61** and **62**. When line **230** is at a logic one level, a two digit display driven by signals on output lines **59***a* and **59***b* will indicate an **88** to signify the presence of an illegal channel number in latches **107** and **109**.

The output of inverter **144** also is applied to the clear inputs of flip-flops **111***a*–**111***f* and **111***h*, to the preset input of flip-flop **111***g*, and to one input of NAND gate **145**. In addition, inverter **144** supplies an input by way of line **276** to the preset input of flip-flops **124** and **273** and to the clear inputs of flip-flops **271** and **272**, FIG. **4***f*.

Upon receiving a reset pulse from NOR gate **142**, NOR gate **194**, FIG. **4***f*, applies a logic zero state to output line **51** to signify a below channel 6 condition. Further, when a channel 7 operation is signaled by AND gate **65**, the output of NOR gate **138** is forced to a logic zero state to thereby raise the output of NOR gate **194** to a logic one state. NOR gates **138** and **194** form latch circuit **139**.

After a channel number has been entered at keyboard **100** and a command has been entered by depressing either switch **56** or switch **57**, system operation commences upon the receipt of a Count Ready signal applied along line **228** to NOR gate **203**, which with NOR gate **199** forms latch circuit **200**. NOR gate **199** receives inputs from input line **228** and from NOR gate **142** by way of line **147** and in turn supplies an input to a Schmidt trigger **115**.

Upon receiving a pulse along line **50**, FIG. **4***h*, from an external analog comparator comprising a part of detector **22**, FIG. **1**, trigger **115** activates a monostable multivibrator **116**, the output of which is applied to an input of AND gates **229**, **231** and **232**. The outputs of AND gates **229**, **231** and **232** in turn are connected to the trigger inputs of flip-flops **233**–**235**, respectively. The clear inputs to flip-flops **233**–**235** are connected in parallel to the output of a NOR gate **195**, which receives reset signals from NOR gate **142** by way of line **147** and from NAND gate **145** by way of line **198**.

The Q output of flip-flop **235**, FIG. **4***h*, is connected to an input of a NOR gate **236**, the output of which is applied as an input to a NAND gate **237**. The Q output of flip-flop **234** is applied as an input to AND gate **232**, NAND gate **237**, an AND gate **238** and an AND gate **239**. The Q output of flip-flop **233** is applied as an input to AND gate **231**, to AND gate **239**, and to NOR gate **236**. An additional input is applied to AND gate **239** by way of line **240** which in turn is connected to the UVF-/UHF signal line **52**. Line **240** is also connected by way of inverter **241** to an input of AND gate **238**. The outputs of AND gates **238** and **239** in turn are applied as inputs to OR gate **242**, the output of which is applied as an input to NOR gate **195**.

Flip-flops **233**–**235**, gates **195**, **229**–**232**, **236**–**239** and **242**, and inverter **241** comprise a modulo 3/6 counter **113**. NAND gate **237** of counter **113** emits a pulse once each six counts when the counter is in a modulo 6 count state as during a VHF operation, or once each three counts while in a modulo 3 count state as during a UHF operation. The pulse is applied along lines **112** and **114** to an inverter **282**. The output of inverter **282** supplies a trigger pulse to counter **111** and by way of line **284** to AND gate **285**.

A second input to AND gate **285** is supplied by inverter **243** by way of line **137**. A third input is supplied by the NOR gate **110***c* of comparator **110**. The output of AND gate **285** in turn is appllied to an input of AND gate **210** and through an inverter **49** to the trigger input of flip-flop **132**.

The output of NAND gate **237** is also applied along line **112** as an input to a NOR gate **281** which also receives a Channel Presence signal from a preceding receiver system by way of line **47**. A third input is supplied by trigger **115** by way of line **280**. The output of NOR gate **281** is applied to the clock input of flip-flops **130** and **131** and as an input to NAND gate **133**.

The output of Schmidt trigger **115** is also applied by way of line **117** as an input to an inverter **243**, to AND gates **244**–**249**, and to the trigger input of a flip-flop **250**. The Q output of flip-flop **250** in turn is applied as an input to AND gates **244**–**249** and to exclusive NOR gate **257**, while the Q output of flip-flop **251** is applied as an input to AND gates **245**–**249** and to exclusive NOR gate **258**. Further, the Q output of flip-flop **252** is connected to an input of AND gates **246**–**249** and to an input of exclusive NOR gate **259**, while the Q output of flip-flop **253** is connected to an input of AND gates **247**–**249** and to an input of exclusive NOR gate **260**. The Q output of flip-flop **254** is applied as an input to AND gates **248** and **249** and as an input to exclusive NOR gate **261**. In addition, the Q output of flip-flop **255** is connected as an input to AND gate **249** and as

an input to exclusive NOR gate **262.** The Q output of flip-flop **256** is connected directly as an input to exclusive NOR gate **263.** Flip-flops **250–256** and AND gates **244–249** comprise a seven bit binary counter **118.**

The clear inputs of flip-flops **251–256,** FIG. **4***h*, and the present input of flip-flop **250** are each connected in parallel to the output of a NOR gate **213** which receives an input from NOR gate **142** by way of line **147.** NOR gate **213** also receives an input from a monostable multivibrator circuit **123.**

A second set of inputs to exclusive NOR gates **257–263,** FIG. **4***f*, are supplied by lines **120** leading from the output of ROM **60.** The outputs of gates **257–263** are applied as inputs to a NAND gate **264.** An additional input to NAND gate **264** is applied by way of a line **265** also leading from the output of ROM **60.** Exclusive NOR gates **257–263** and NAND gate **264** comprise a comparator **119** which compares the output state of ROM **60** with the contents of counter **118.**

The output of NAND gate **264,** FIG. **4***f*, is applied through an inverter **266** as an input to NOR gate **122.** A second input to NOR gate **122** is applied by way of line **240** leading from latch circuit **207.** The output of NAND gate **264** is also applied as a trigger to multivibrator **123.** More particularly, the output of NAND gate **264** is applied as an input to a NOR gate **267,** as is the output of NOR gate **122.** The output of NAND gate **264** also is applied through five inverters as a third input to NOR gate **267.** Thus, when the output of NAND gate **264** changes state to denote coincidence, a momentary pulse is produced at the output of NOR gate **267** having a pulse width equal to the delay produced by the five inverters. The output of NOR gates **267** in turn is applied as a second input to nor gate **213.**

The output of NAND gate **264** is also applied through a first of the inverters, inverter **270,** to one input to NAND gate **125,** and through a second and third of the inverters **268** and **269,** to the second input of NAND gate **125.** The circuit comprising inverter **268,** inverter **269** and NAND gate **125** comprises a spike rejecting circuit using the gate delays created by inverters **269** and **268.**

The output of NAND gate **125** is applied to the trigger input of flip-flop **124** and through an inverter **146** to AND gates **274** and **275** and to a trigger input of a flip-flop **271.** The Q output of flip-flop **271** is applied as an input to AND gates **274** and **275,** while the Q output of flip-flop **272** is applied as an input to AND gate **274.** The outputs of AND gates **274** and **275** in turn are applied to the trigger inputs of flip-flops **273** and **272,** respectively. In addition, the preset input of flip-flop **273** and the clear inputs of flip-flops **271** and **272** are connected in parallel to a line **276** leading from the output of inverter **144.** AND gates **274** and **275** and flip-flops **271–273** form a ROM address counter **141.**

The Q outputs of flip-flops **271–273** are applied as inputs to a conventional three to eight line address decode circuit **277** addressing the ROM **60,** FIG. **4***e*.

The digital controller illustrated in FIGS. **4***a*–**4***h* may be in any one of four states.

## I — QUIESCENT STATE

In the quiescent state, no current exists on input line **58,** and capacitor **126** is discharged. Thus, flip-flops **127, 128** and **129** are cleared. The $\overline{Q}$ output of flip-flop **127** is raised thereby to a logic one level forcing a logic zero level at the output of NOR gate **180** to clear flip-flops **130** and **131.** The $\overline{Q}$ output is also applied to latch circuit **182** to flag a blank/mute condition on line **67** and turn off an external display.

The Q output of flip-flop **127** is applied to AND gate **134** of latch circuit **135.** As switches **56** and **57** are normally open as are the switches of keyboard **100,** and since flip-flop **129** has been cleared by the discharge state of capacitor **126** to place the Q output in a logic zero state, the output of NOR gate **166** is at a logic one state. The output of flip-flop circuit **152,** therefore, is forced to a logic zero state, and the output of NAND gate **184** is raised to a logic one state which is applied to NAND gate **136.** Thus, flip-flop **132** is cleared.

AND gate **63** which tests for the occurrence of a channel **84** number in decade counter **111** has a logic zero state at its output. The output of driver **190** is at a logic zero state. In addition, a logic zero at the output of flip-flop **152** forces a logic zero at the output of AND gate **185.** Further, as the output of the lockout circuit **201** is normally at a logic one state as is the output of NOR gate **165** when switch **56** is open, the output of NOR gate **189** is forced to a logic zero state which is applied to NOR gate **142** and the D input of flip-flop **158.** One clock period later, the Q output of flip-flop **158** goes to a logic zero which is clocked into flip-flop **159.** At the end of a second clock period, the Q output of flip-flop **159** is raised to a logic one state which is applied to NOR gate **142** to force the output of the NOR gate to a logic zero state. For two clock periods, therefore, a logic one state exists at the output of NOR gate **142** to signal a system reset condition.

The reset signal is applied to inverter **144,** the output of which transitions to a logic zero state. Thus, flip-flops **111***a*–**111***f* and **111***h* are cleared and flip-flop **111***g* is preset to place a channel 2 indication in decade counter **111.** Further, the output of NAND gate **145** is raised to a logic one level and applied along output line **48** to signal a system reset condition to the succeeding receiver system. The logic zero state at the output of inverter **144** also clears flip-flops **271** and **272** of ROM address counter **141** and presets flip-flop **273** to address the first location of ROM **60.** In addition, the logic zero state of inverter **144** is applied to the preset input of flip-flop **124** to place counter **113** in a count state.

Since flip-flops **130** and **131** are cleared, the output of inverter **217** is at a logic zero state which is applied to the D input of flip-flop **161** and to one input of NOR gate **218.** Thus, for two clock periods, the output of NOR gate **218** is at a logic one state which is applied to an input of NAND gate **143.** During this same period of time, the output of NOR gate **142** is at a logic one state which forces the output of NAND gate **143** to a logic zero state. The first digit clear circuit **225,** therefore, is preset.

The logic one state at the output of NOR gate **142,** which signals a system reset, also forces the output of NOR gate **205** to a logic zero state to signal a VHF operation on line **52.** In addition, the output of NOR gate **194** drops to a logic zero state to signal a below channel 6 operation on output line **51.** Further, the logic one state of gate **142** is applied along line **147** to NOR gate **213** to clear flip-flops **251–256** and preset flip-flop **250** of binary counter **118.** Flip-flops **233–235** of MOD 3/6 counter **113** also are cleared, and the output of NOR gate **199** is lowered to a logic zero state to inhibit the 1.0 MHz pulse train received on input line **50.**

## II — POWER UP STATE

When power is applied along line **58**, capacitor **126** is charged above the input threshold of the clear inputs of flip-flops **127**, **128** and **129**. Flip-flops **128** and **129**, therefore, respond to the clock signal on line **55**, and flip-flop **127** is freed to respond to a preset signal.

Before a channel number entry is made by depressing switches of keyboard **100**, the output of NAND gate **100***m* is at a logic one state which is clocked through flip-flops **128**, **129** and **156** to raise the output of NOR gate **104** to a logic one level. Also, as the Q output of flip-flop **129** is at a logic one level, the output of NOR gates **165** and **166** are at logic zero levels. A logic one level thus exists at the outputs of NOR gate **175** and AND gate **102***e*, and line **102***d* is raised to a logic one level.

When a keyboard entry is made by depressing selected switches of keyboard **100**, the output of NOR gate **104** is forced to a logic zero level which is applied through AND gate **102***e* and along line **102***d* to preset flip-flop **127**. The Q output of flip-flop **127** is thus raised to a logic one state, while the Q output is forced to a logic zero state. This output state of the flip-flop is maintained throughout the period that power is applied to the system by way of line **58**.

As before explained, when the first digit of a channel number is entered from keyboard **100**, the output of gate **104** drops to a logic zero state. The output of NAND gate **105** thus is raised to a logic one state which is applied to circuit **225**, and through three inverters to clock the four least significant digit flip-flops **107***a*–**107***d* of latch **107**.

As flip-flops **221** and **222** of circuit **225** were preset during the quiescent state as before described, the $\overline{Q}$ output of flip-flop **222** is at a logic zero state while the Q output of flip-flop **221** is at a logic one state. NAND gate **224** thus remains at a logic one state inhibiting the clock inputs of latch **109** and preventing the entry of most significant digit data. Since the Q output of flip-flop **221** is at a logic one state, the output of NAND gate **223** is forced to a logic zero state to thereby clear flip-flops **109***a*–**109***d* of latch **109**.

After the first channel digit is entered at keyboard **100** and clocked into latch **107**, the output of NOR gate **104** returns to a logic one state. The output of NAND gate **105** is thus forced to a logic zero state to clock flip-flops **221** and **222**. The $\overline{Q}$ output of flip-flop **222** is raised to a logic one state, while the Q output of flip-flop **221** is forced to a logic zero state. The output of NAND gate **224** in turn drops to a logic zero state to clock the data stored in latch **107** into latch **109**.

Upon entry of a second channel number digit, the output of NOR gate **104** again transitions to a logic zero state to clock the digit into latch **107** as before described.

## III — TUNE STATE

Assuming that a channel number has been entered into the most significant and least significant latches **109** and **107**, respectively, a normal tune operation is begun by depressing switch **56**. The output of AND gate **100***m* is thereby lowered to a logic zero state which is clocked through flip-flops **128** and **129**. Thus, the output of NOR gate **165** is raised to a logic one state which is applied to an input of AND gate **179**. As the other input of AND gate **179** is normally at a logic one state, the output of NOR gate **189** is forced to a logic zero state. Two clock periods later, the $\overline{Q}$ output of flip-flop **159** is raised to a logic one state. However, during the time interval defined by the two clock periods, the output of NOR gate **142** is at a logic one level to initiate a system reset as before described. Thus, decade counter III is preset to a channel 2 indication, ROM address counter **141** is cleared to address the first location of ROM **60**, flip-flop **124** is preset to enable MOD 3/6 counter **113**, binary counter **118** is cleared and the analog comparator input on input line **50** is disabled to await a Count Ready signal on input line **228**.

With flip-flop **124** preset for a count state, counter **113** will be free to count as either a modulo 3 or modulo 6 counter as determined by the logic state existing on output line **52** and line **240**. More particularly, a logic zero state on output line **52** signifies operation in the VHF range. AND gate **238** is thereby activated to decode a 6, while AND gate **239** is inhibited. When output line **52** is at a logic one state, however, a UHF range is indicated which inhibits AND gate **238** while freeing AND gate **239** to decode a 3 count. Depending on the count state, whether a modulo 3 or modulo 6, every count of 3 or 6 will cause output of OR gate **242** to transition to a logic one state to clear flip-flops **233**–**235**.

The counter then is incremented only after a Count Ready pulse is received on line **228**, which forces the output of NOR gate **199** to a logic one state. Schmidt trigger **115** is no longer inhibited, and analog comparator inputs (frequency markers) on line **50** are received to actuate the trigger. Monostable multivibrator **116** responds to the Schmidt trigger and in turn pulses the trigger inputs of flip-flops **233**—**235**.

NOR gate **236** and AND gate **237** receive the Q outputs of flip-flops **233**–**235** and decode on a binary count of 2. The output of gate **237** then transitions from a logic one to a logic zero state at the binary count of 2, and on a binary count of 3 returns to a logic one state. This sequence of state transitions is fed through inverter **282** to trigger decade counter **111**, which is updated to contain the present channel position to which the system is tuned.

Counter **113** continues to count the analog comparator pulses on line **50**, and to update counter **111** until the output of the decade counter equals the output of latches **107** and **109**. Under a coincidence condition, the output of comparator **110** rises to a logic one state which is reflected at the output of AND gate **285**. Two other inputs to AND gate **129** are applied by inverter **282** and by inverter **243**.

The output of inverter **282** is at a logic one state once each 6 binary counts when counter **113** is in a modulo 6 state, or once each 3 binary counts when counter **113** is in a modulo 3 state. The output of inverter **243** is at a logic one state when the output of Schmidt trigger **115** is forced to a logic zero state by an incoming pulse on input line **50**. When each of the above conditions occur simultaneously, the output of AND gate **285** will rise to a logic one state to signify that the system is tuned to the channel selected at keyboard **100**.

During the tuning operation, the analog comparator pulses on input line **50** also are counted by binary counter **118**. Concurrently, the output of counter **118** is compared with the output of ROM **60** by means of binary comparator **119**. When coincidence occurs, the output of NAND gate **264** is raised to a logic one state. Monostable multivibrator **123** is triggered thereby to

produce a momentary logic one state at the output of NOR gate **267** to reset counter **118.** In addition, the output of NAND gate **125** transistions to a logic zero state to trigger flip-flop **124** and inhibit counter **113.**

During the period that the output of NAND gate **125** is at a logic zero state, the output of inverter **146** is raised to a logic one state. As soon as counter **118** is reset, the output of comparator **119** drops to a logic zero state to return NAND gate **125** to a logic one state. The output of inverter **146** thus returns to the logic zero state to trigger flip-flops **271–273** and increment ROM address counter **141** by one count. This in turn causes the address decode circuit **277** to advance to the next ROM **60** location.

When the output of ROM **60** corresponding to the new location addressed by circuit **277** again compares with the output of counter **118,** flip-flop **124** is triggered to allow counter **113** to continue the count of pulses received by way of input line **50.**

Thus, in accordance with the invention, a search begins upward from channel 2 during a tuning operation and continues until an invalid channel or skip area is encountered. Such an encounter is signaled by a coincidence occurring between the contents of counter **118** and the output state corresponding to the first addressed word of ROM **60.** When coincidence occurs, counter **113** is inhibited and the next location in ROM **60** is addressed. Such location contains a word indicating the number of frequency markers to be skipped. The tuning operation then continues upward until a coincidence again occurs as signified by the output of comparator **119.** ROM address counter **141** is again incremented to address the next location in ROM **60,** and flip-flop **124** is triggered to free counter **113** and continue the count of pulses from monostable multivibrator **116.** This next location of ROM **60** contains a word indicating the number of frequency markers between the present channel location and the next illegal channel or skip area. In further accordance with the invention, ROM **60** contains only words indicating the location of skip areas, and words indicating the number of frequency markers to be skipped.

After a power up stage, the output of NAND gate **134** of latch **135** is at a logic one state, while the output of NAND gate **136** is at a logic zero state. Thus, the output of NAND gate **208** is at a logic zero state which is applied along line **209** to signal a blank/mute condition on line **67.** The display tube **26** of FIG. **1** thus is deactivated during the tuning operation. When AND gate **285** is raised to a logic one state to signal a channel acquisition, NOR gate **212** is forced to a logic zero state and the output of NAND gate **208** transitions to a logic one state. The output of NAND gate **278** thereby transitions to a logic zero state which is applied along output line **53** to turn off current source **19** of FIG. **1.** In addition, the output of NAND gate **208** is applied along line **209** to remove the blank/mute condition on line **67.** This signifies the end of the tune sequence.

## IV — SEARCH STATE

A search sequence may be initiated to acquire a channel signal at a channel location by depressing switch **57** after a keyboard **100** entry.

The grounding of switch **57** causes the output of NOR gate **166** to transistion to a logic one state which in turn causes the output of inverter **172** to transition to a logic zero state. The logic zero state at inverter **172** triggers flip-flop **152** and causes the output of NOR gate **151** to rise to a logic one state which is applied to an input of AND gate **185.** As the remaining input from lockout circuit **201** is normally at a logic one state, system reset occurs as previously described. In addition, the output of NAND gate **184** transitions to a logic zero state to change the state of latch **135.**

The output of NAND gate **134** is thus forced to a logic zero state, while the output of NAND gate **136** transitions to a logic one state to remove the clear signal to flip-flop **132.**

Operating in a manner analogous to that of the tune operation, the upward search continues until a coincidence is noted at the output of comparator **110.** Then, when the output of gate **285** transitions to a logic one level to signify that the sought for channel location has been acquired, flip-flop **132** is triggered. However, in contradistinction to the tuning operation, the output of NOR gate **212** does not transition to a logic zero state, and thus the output of NAND gate **278** and line **53** remain at a logic one state to allow the current source **19** to continue to drive an oscillator **13** of FIG. **1.**

When flip-flop **132** is triggered by the occurrence of a logic one state at the output of AND gate **285,** the Q output of the flip-flop is raised to a logic one state which is applied to NOR gate **214.** The output of NOR gate **214** thus is forced to a logic zero state which is applied along line **215** to logic switch banks **106** and **108.** This in effect switches the input terminals of latches **107** and **109** from keyboard **100** to the Q outputs of counter **111.**

The presence of channel information is signaled by NOR gate **281,** which normally receives logic state one inputs from NAND gate **237,** Schmidt trigger **115** and input line **47.** Thus, when a legal channel count is indicated by the output of NAND gate **237** in sync with a Schmidt trigger output and simultaneously a signal is received on input line **47** signifying the presence of a channel signal, flip-flops **130** and **131** are clocked by the trailing edge of the pulse generated by gate **281.**

Since the input of flip-flop **130** is tied to the output of flip-flop **132,** it will take two consecutive pulses from gate **281** to clock a logic one state from flip-flop **132** through flip-flops **130** and **131.** When a logic one state appears at the Q output of flip-flop **131,** the logic state is applied to the input of AND gate **211** to force the output of NOR gate **212** to a logic zero state. The state of NAND gates **208** and **278** of latch circuit **279** are thereby changed, and a logic zero state is applied along line **53** to turn the current source off. Control of VCO **13,** FIG. **1,** in the succeeding receiver system then is turned over to an AFC network.

When the Q output of flip-flop **131** is raised to a logic one state, the sync pulse output of NOR gate **281** also may be clocked through NAND gate **133.** The first of these sync pulses resets latch circuit **135** and causes the output of NAND gate **134** to transition to a logic one state. The output of NAND gate **136** thus transitions to a logic zero state, and flip-flop **132** is cleared to force the Q output to a logic zero state.

The flip-flop **132** logic zero state is clocked through flip-flops **130** and **131** by two successive NOR gate **281** sync pulses. Before the logic zero state is clocked through flip-flop **131,** however, the sync pulses are clocked through NAND gate **133** and applied to NAND gate **105.** The resulting logic one state at the output of NAND gate **105** then is applied to clock latch **107,** and by way of first digit clear circuit **225** to clock latch **109.** As the output of NOR gate **214** is at a logic

zero state during this period, data flow from keyboard **100** is inhibited and latches **107** and **109** load the contents of decade counter **111.** A further search thus may be conducted to acquire a signal at the location stored in latches **107** and **109** by merely depressing key **57.**

When the Q output of flip-flop **131** returns to a logic zero state, the output of NOR gate **214** transitions to a logic one state which is applied to inverter **217.** The monostable multivibrator circuit including NOR gate **218** and flip-flops **160** and **161** then is triggered and a logic one pulse is applied to NAND gate **143** to preset first digit clear circuit **225.**

Throughout the search sequence, AND gate **63** is connected to the counter **111** outputs so as to decode a count of **84.** Such a count is an indication that the search sequence has progressed beyond the highest possible channel. As illustrated in FIGS. **4***a*–**4***h*, a logic one at the output of AND gate **63** is applied to driver **190** to initiate a reset sequence. Thus, if a search has proceeded through UHF range and progressed beyond channel **83,** a system reset occurs and the search sequence resumes from channel **2** up through the VHF and UHF ranges.

FIGS. **5**–**7** comprise a flow chart for the digital controller of FIGS. **1** and **4***a*–**4***h* and are provided to further aid in understanding the operation of controller.

Beginning with state **400***a*, an operator enters at keyboard **100** either one or both of two digits X and Y, representing the most significant and least significant digits, respectively, of a channel number. In addition, a further command characterized by the letter Z designates either a tune mode or an acquisition (search) mode. It is assumed the system is in a powered-up condition as represented by state **400***b*.

At state **401,** a test is made for the presence of a least significant digit Y. If the least significant digit (LSD) is present, a transfer is made to state **402** where a test for the presence of a most significant digit (MSD) is made. If the MSD is not present, then the MSD latch **109,** FIG. **4***c*, is cleared at state **403** and a transfer to state **404** is made. However, if the MSD is present, a transfer is made directly from state **402** to state **404.** Further, a direct transfer is made from state **401** to state **404** when the presence of an LSD is not detected.

At state **404,** the presence of either a tune or acquisition command initiates a transfer to state **405,** while the absence of either command causes the decision process to reenter state **404** to again test for the presence of a command.

At state **405,** the LSD and MSD are tested against usable or legal channel numbers, and if a legal channel has been requested, then a transfer is made to state **406.** However, if a nonexistent or forbidden channel has been requested, then a transfer is made to state **407** where a two digit display is activated by way of lines **59***a* and **59***b*, FIG. **4***g*, to display the number **88** indicating an illegal channel selection. After such indication, a blank/mute command is given to deenergize both the video and sound channels of the display. From state **407** a transfer is made to state **400***a* where the system enters a quiescent state to await additional operator entries.

Assuming that the operator has requested a legal channel, integrator **18** and an illegal entry indicator signal (Eighty Eight) are disabled as are the video and sound channels of the TV receiver.

The tuning process begins at state **408** where the system is reset to begin a low to high frequency scan from channel 2 and where a UHF-VHF flag (U/VFLG) is set for a VHF operation. At state **409,** the integrator **18** is energized; the modulo 3/6 counter **113** of FIG. **4***h* is set to count every sixth fence post, and an RF preselector control flag LHVFLG, corresponding to line **51** of FIG. **4***f*, is reset to 0 to place preselector **11** of FIG. **1** in a mode for operation between channels 2 and 6.

At state **410,** decade counter **111,** FIG. **4***c*, is set for a channel 2 indication, while binary counter **118** counting frequency markers or fence posts is set with a one count and modulo 3/6 counter **113** is cleared.

At state **411** (FIG. **6**), a test is made for a Count Ready pulse, line **228** of FIG. **4***h*, to locate the initial fence post. If a County Ready pulse is present, a transfer is made to state **412.** However, if there is no Count Ready pulse, a return to state **411** is made to await the arrival of the pulse.

Upon receipt of the Count Ready pulse, the frequency band marker or fence post input from an analog comparator in detector **22** of FIG. **1** is enabled at state **412.** Further, a test is made at state **413** to determine whether comparator **119** of FIG. **4***f* indicates coincidence between binary counter **118** and the current output state of ROM **60.** If so, a transfer is made to node F where a skip loop is initiated to proceed to the next legal channel as will be later explained. However, if coincidence has not occurred, then a transfer is made to state **414** where the command entry is examined. If a search command has been entered, a transfer is made to state **415** where a test is made to determine whether a channel signal exists at the present frequency location. If so, a transfer is made to node B to lock on the present frequency location as will later be explained. However, if a channel signal does not exist at the present frequency location, a transfer is made to state **416.**

At state **416,** line **240** of FIG. **4***h* is sensed to determine whether modulo 3/6 counter **113** is in a modulo 6 or modulo 3 count state. If a modulo 3 count state exists, a transfer is made to state **417** to test the contents of counter **113.** If a count of 3 exists in the counter, a transfer is made to state **419.** However, if a count other than 3 exists in counter **113,** a transfer is made from state **417** directly to state **420.**

If counter **113** is in a modulo 6 count state, a transfer is made from state **416** to state **418** to test for a count in If a count other than 6 exists in counter **113,** a transfer is made to state **420.** However, if a count of 6 exists in the counter, a transfer is made to state **419** where decade counter **111** is incremented by 1.

At state **420,** the contents of decade counter **111** are examined to determine whether a channel **7** operation is indicated. If so, a transfer is made to state **421** to set the LHVFLG flag, line **51** of FIG. **4***f*. After the flag is set, a transfer is made to state **422.** A direct transfer from state **420** to state **422** is made if a count other than 7 exists in decade counter **111.**

The contents of counter **111** are further tested at state **422** to determine whether the system operation is proceeding through the UHF band. If so, a transfer is made to state **423** where the U/VFLG flag is set and counter **113** is placed in a modulo 3 count state. A transfer is then made from state **423** to state **413** where the operation continues as before described. A transfer is made directly from state **422** to state **413** if decade counter **111** contains other than a 14 count.

Assuming that comparator **119** does not indicate a condition of coincidence, and that the operator entered a command other than a search command, a transfer is

made from state **414** to state **424** where comparator **110** of FIG. **4***c* is examined for a coincidence condition. If the contents of decade counter **111** are not identical to the channel number entered at keyboard **100,** a transfer is made from state **424** to state **416** where the process continues as before described. However, if the contents of decade counter **111** are identical to the channel number entered at keyboard **100,** then comparator **110** will signal the existence of a coincidence and a transfer is made from state **424** to state **425.**

The command entered by the operator at keyboard **100** is examined at state **425,** and a transfer is made from state **425** to state **416** if a command other than a tune command has been entered. However, if a tune command has been entered, a transfer is made through node D to state **426** (FIG. **7**) where integrator **18** is disabled. The transfer is then made to state **427** to test for the existence of a broadcast signal at the present frequency location. If a broadcast signal does not exist, a transfer is made to state **428** where integrator **18** is again enabled and a blank/mute condition is signaled on line **67** of FIG. **4***b*. The integrator continues to drive the local oscillator upward in frequency until a broadcast signal is detected at state **429.** When a broadcast signal is detected, a transfer is made from state **429** to state **430** where the integrator is disabled and the blank/mute condition is removed.

Referring to state **415,** FIG. **6,** where a search command has been detected and a broadcast signal at the current frequency location exists, a transfer is made from state **415** through node B to state **430** (FIG. **7**) where again integrator **18** is disabled and the blank/-mute condition is removed.

When the system is in either a tune or search operation and a state of coincidence exists between ROM **60** and the contents of binary counter **118,** a transfer is made from state **413** of FIG. **6** through node F to state **431** as before described. At state **431,** FIG. **7,** the ROM address counter **141** increments the address decode circuit **277** to address the next successive location of ROM **60** containing the bandwidth in fence posts of the skip band at the current frequency location. In addition, binary counter **118** of FIG. **4***h* is reset and modulo 3/6 counter **113** is both reset and disabled.

A transfer is then made from state **431** to state **432** where the system cycles until binary counter **118** has a binary count equal to the current output state of ROM **60.** Integrator **18** continues to drive VCO **13** of FIG. **1** upward in frequency until the number of fence posts counted by binary counter **118** is equal to the binary count indicated by the current output state of ROM **60.** Upon coincidence as indicated by comparator **119** of FIG. **4***f*, a transfer is made from state **432** to state **433** where the ROM address counter **141** again increments the address decode circuit **277.** The output state of ROM **60** thereby indicates the bandwidth in fence posts between the current frequency location and the next skip area.

Binary counter **118** is reset and modulo 3/6 counter **113** is enabled before a transfer is made from state **433** to state **434,** where decade counter **111** is incremented by 1. A transfer is then made from state **434** through node E to state **416** of FIG. **6,** where the process continues as before described.

In accordance with the invention, there is provided a digital tuning controller having internal storage for a selected channel number and for indicia relating to the size and location of unused frequency bands to be skipped. During a tune or search operation, regularly spaced frequency markers produced from the output of a local oscillator are counted while the oscillator is sweeping a band of allocated channels. Aggregates of the count are compared with the internal storage continuously to avoid unused or illegal frequency bands and to acquire a selected channel and a signal within the channel.

Having described the invention in connection with certain specific embodiments thereof, it is to be understood that further modifications may now suggest themselves to those skilled in the art and it is intended to cover such modifications as fall within the scope of the appended claims.

What is claimed is:

**1.** In a tuner for the selection of one of a plurality of broadcast channels of the same type and standard bandwidth located in a plurality of noncontiguous frequency bands within a frequency spectrum, the channels within each band being continuous, said tuner being adapted to tune continuously and repeatedly through said frequency spectrum containing all of said channels and to produce regularly spaced frequency markers while tuning through said spectrum, a control system comprising:

a. a keyboard to receive manual entry of the digits of the selected channel number and to produce electrical indicia thereof,

b. means to receive and store said channel number indicia,

c. means to initiate tuning traversals of said spectrum by said tuner,

d. means to receive and count said frequency markers generated during said traversals,

e. means to receive said frequency markers and produce a channel count indication each time the number of frequency markers receiver indicates tuner traversal of a channel bandwidth,

f. means to receive and compare said channel count indications and said stored channel number indicia and to arrest the traversal of said tuner when the comparison indicates the selected channel has been tuned by said tuner,

g. means storing indications of frequency bands within said spectrum not containing channels of said same type, and

h. means to receive and compare the stored indications and said frequency marker count and to interrupt the reception of said frequency markers by said last mentioned means to receive said frequency markers when this comparison indicates said tuner is traversing said frequency bands within said spectrum not containing channels of said same type.

**2.** The control system defined in claim **1** further comprising means to receive said channel count indications and to produce a visual display of the channel number currently tuned by said tuner.

**3.** The control system defined in claim **1** further comprising means to prevent initiation of the tuning traversal of said tuner and to produce a visual error indication when an inoperative channel number is entered through said keyboard.

**4.** The control system defined in claim **1** further comprising:

a. means to initiate a search tuning traversal of said spectrum by said tuner; and

b. means to detect presence of a broadcast signal occurring in the channel of said same type tuned by said tuner and to arrest the traversal of said tuner in response thereto.

**5.** The control system defined in claim **4** further comprising means to receive said channel count indications and to produce a visual display of the channel number currently tuned by said tuner.

**6.** The control system defined in claim **4** further comprising means to prevent initiation of the tuning traversal of said tuner and to produce a visual error indication when an inoperative channel number is entered through said keyboard.

**7.** In a broadcast television tuner for selecting one of a plurality of television channels some of which are separated from others by frequency bands assigned for broadcast other than television, said tuner being adapted to tune continuously and repeatedly through the spectrum containing said plurality of channels and to produce one MHz markers as the tuner traverses said spectrum, a control system comprising:

a. means to receive and store electrical signal indicia of the channel number of the desired television channel,

b. means to receive and count said one MHz markers and to produce a channel marker for each six one MHz markers received,

c. means to receive and count said channel markers,

d. means to receive and compare said indicia of channel number and the count of said channel markers and to arrest the spectrum traversal of said tuner when the comparison indicates equality of said channel number and said count,

e. means having addressively stored therein indicators of the locations within said spectrum of said frequency bands assigned for broadcast other than television,

f. second means to receive and count said one MHz markers, and

g. means to receive and compare the count from said second means and the currently addressed indicator of location from the means storing said indicators and to interrupt reception of said one MHz markers by said first mentioned means to receive and count said markers when the comparison indicates said tuner is traversing one of said frequency bands assigned for broadcast other than television and to increment the said means storing said indicators to produce a next successively stored indicator when the comparison indicates said tuner has traversed the boundary limit of one of said frequency bands assigned for broadcast other than television.

**8.** The control system defined by claim **7** further comprising means to receive said count of channel markers and to produce a visual display of the television channel number currently tuned by said tuner.

**9.** The control system defined by claim **7** further comprising means to receive said indicia of channel number and to produce an error indication and to prevent initiation of the tuning of said tuner through said spectrum when said indicia received is of an inoperative channel number.

**10.** The control system as defined in claim **7** wherein said means to receive and compare said count and said currently addressed indicator further produces a signal to reset said second means to receive and count one MHz markers whenever the comparison indicates said tuner has traversed a boundary limit of one of said frequency bands assigned to broadcast other than television.

**11.** A control system as defined in claim **7** further comprising manually controlled means to initiate tuning of said tuner through said spectrum in a search mode,

means to indicate presence of a broadcast signal received by said tuner, and

means responsive to said means to indicate presence of a broadcast signal to arrest the traversal of said tuner when a signal present indication is received while said tuner is traversing a broadcast television channel.

**12.** The control system defined in claim **11** further comprising means to receive said count of channel markers and to produce a visual display of the television channel number currently tuned by said tuner.

**13.** A control system as defined in claim **7** further comprising manually controlled means to initiate tuning of said tuner through said spectrum subsequent to the reception of said desired channel number indicia.

**14.** The control system as defined by claim **13** wherein said means to receive and store electrical signal indicia of the channel number is adapted to receive and store separately the digits of said channel number in the order of most significant digit first and least significant digit next, and

said control system further comprises means to insert a zero indicia in the most significant digit storage location of said means to receive and store said indicia in response to the activation of said manual control means after the reception of only a single digit indicia by said means to receive and store said indicia.

**15.** The control system as defined in claim **13** further comprising means to receive said count of channel markers and to produce a visual display of the television channel number currently tuned by said tuner.

**16.** The control system defined by claim **13** further comprising means to receive said indicia of channel number and to produce an error indication and to prevent initiation of the tuning of said tuner through said spectrum when said indicia is of an inoperative channel number.

**17.** The control system as defined in claim **13** further comprising manually control means to initiate tuning of said tuner through said spectrum in a search mode,

means to indicate presence of a broadcast signal received by said tuner, and

means responsive to said means to indicate presence of a broadcast signal to arrest the traversal of said tuner where a signal present indication is received while said tuner is traversing a broadcast television channel.

**18.** The control system as defined in claim **17** wherein said means to receive and store electrical signal indicia of the channel number is adapted to receive and store separately the digits of said channel number in the order of most significant digit first and least significant digit next, and

said control system further comprises means to insert a zero indicia in the most significant digit storage location of said means to receive and store indicia in response to activation of said manually controlled means after the reception of only a single digit indicia by said means to receive and store said indicia.

* * * * *