UNITED STATES PATENT AND TRADEMARK OFFICE

BEFORE THE PATENT TRIAL AND APPEAL BOARD

COMCAST CABLE COMMUNICATIONS, LLC,
Petitioner,

v.

ENTROPIC COMMUNICATIONS, LLC,
Patent Owner.

Case IPR2025-00180
Patent 11,785,275

EXHIBIT 2013

DECLARATION OF SAMUEL H. RUSS, PH.D.

TABLE OF CONTENTS

Page

I. INTRODUCTION 1

II. QUALIFICATIONS 2

III. BASES OF OPINIONS 5

IV. APPLICABLE LEGAL STANDARDS 5

A. Level Of Ordinary Skill In The Art 5

B. My Understanding Of Legal Standards 7

V. CLAIMS-AT-ISSUE (CLAIMS 1-76) 10

VI. OPINIONS 11

A. Overview: Zhang Is The Prior Art Considered And Rejected During Prosecution Because It Has A Fundamentally Different Architecture From The Patent. 11

B. Petitioner Does Not Show "Selecting, By A Digital Frontend (DFE) … The Plurality Of Desired Channels From The Digitized Signal" (All Claims, All Grounds). 18

1. Zhang Channels C1-Cn Are Not The Claimed "Plurality Of Desired Channels" 18

a. Zhang's Channels C_1-C_n Are All Channels In The Entire Signal Band That Are Indiscriminately Demultiplexed Without Any Selection. 19

b. Petitioner Does Not Show Other Claim Limitations If It Relies Zhang Channels C_1-C_n As The Claimed "Desired Channels" 33

2. Zhang's Channels D_1-D_m Do Not Selected "From The Digitized [Input] Signal." 36

VII. CONCLUSION 44

I. INTRODUCTION

1. My name is Samuel H. Russ. I have been retained as an expert witness to provide my independent opinion in regard to the matters at issue in *inter partes* review of U.S. Patent No. 11,785,275 ("the '275 patent") in IPR2025-00180. I have been retained by Entropic Communications, LLC ("Entropic"), the Patent Owner in this proceeding. The Petitioner is Comcast Cable Communications, LLC ("Comcast" or "Petitioner").

2. I am being compensated at my standard hourly rate for my time spent working in connection with this case. I am also being reimbursed for expenses that I incur during the course of this work. My compensation is in no way related to the outcome of this litigation. If called as a witness, I would testify as to the statements and opinions contained in this report.

3. My analysis of the materials produced in this matter is ongoing and I will continue to review any new material as it is provided. This declaration represents only those opinions I have formed to date. I reserve the right to amend or supplement my opinions based on additional documents or evidence I am presented, including without limitation any arguments or expert declarations advanced by Petitioner in this case.

4. I am not a legal expert and offer no opinions on the law. However, I have been informed by counsel of the various legal standards that apply, and I have applied those standards in arriving at my conclusions.

II. QUALIFICATIONS

5. I have more than 20 years of experience in the fields of broadband cable networks and communications engineering. As explained below, I have authored a reference textbook on signal processing, authored or co-authored 32 journal articles and conference papers in the areas of video storage, video networking and consumer electronics. I am a named inventor on 51 patent applications, which have led to 29 issued U.S. patents and 9 European patents. My professional career has been dedicated to issues relating to signal integrity, communication systems, and home networking more generally. A detailed record of my professional qualifications is set forth in the attached Exhibit 2010, which is my *curriculum vitae*, including a list of publications, awards, research grants, and professional activities. My *curriculum vitae* also lists the matters in which I have served as an expert.

6. I received a Bachelor of Science in Electrical Engineering with Highest Honors from Georgia Institute of Technology in 1986 and a Ph.D. in Electrical Engineering from Georgia Institute of Technology in 1991. My Ph.D.

dissertation was titled "An Information-Theoretic Approach to Analysis of Computer Architectures and Compression of Instruction Memory Usage."

7. I am currently an Associate Professor in the Department of Electrical and Computer Engineering at the University of South Alabama. I joined the Electrical and Computer Engineering faculty in 2007. I have taught a number of classes including classes in signal integrity, embedded systems, and the design of high-speed digital systems. During that time, I won awards for excellent teaching and have been actively publishing research in signal integrity, home networking, and digital video recording (DVR) technologies.

8. Previously, from 1994 to 1999, I served on the faculty of Mississippi State University as an Assistant Professor in the Department of Electrical & Computer Engineering. I taught circuit board design and two-way interactive video classes, among other topics.

9. I also have significant industry experience. From 2000 to 2007, I was the manager in the Advanced Technologies R&D group for Scientific-Atlanta (later Cisco, now Technicolor). As part of this work, I explored major new technologies including home networking and multi-room video distribution and managed a cable set-top box (STB) design group that designed four STB models for the cable television industry, including the Explorer 4200 (non-DVR) and 8300 (DVR) models. Both models were produced in high volumes and sold several

million units. As the design-group manager, I was responsible for managing the design and prototyping activities of the group and for interfacing with other groups (especially integrated circuit design, procurement, software developers, the factory where prototypes were built, and product managers). I also maintained the hardware and mechanical development schedule.

10. While at Scientific-Atlanta, I became a staff expert in home networking, and conducted demonstrations of wireless video technology. I also managed a group that developed a new coaxial home networking system. This coaxial system won a Technology and Engineering Emmy Award in 2013. Further, I was a staff expert in digital video recorder (DVR) reliability, and led a team that improved the software, hardware, repair, and manufacturing processes.

11. I am the author of *Signal Integrity: Applied Electromagnetics and Professional Practice*, Springer, 1st ed. 2016, 2nd ed. 2022. I have also researched and written about video storage, multimedia broadcasting over networks, embedded systems, consumer electronics, set-top boxes, access of stored video from peer devices in a local network, electronic manufacturing systems, and other topics in video and image processing. I have authored or co-authored 32 journal articles and conference papers in these areas of video storage, video networking and consumer electronics. One of my conference papers on digital video recording

won second place in a "Best Paper" competition at the 2011 International Conference on Consumer Electronics in Las Vegas, Nevada.

12. I am a named inventor on 51 patent applications that were filed while I was at Scientific-Atlanta, many of which focus on cable technology. These applications have led to 29 issued U.S. patents and 9 European patents, including U.S. Patent No. 7,908,625 ("Networked Multimedia System").

III. BASES OF OPINIONS

13. In the course of conducting my analysis and forming my opinions, I have reviewed materials including those listed below:

i. U.S. Patent No. 11,785,275 ("the '275 patent") and its prosecution history;

ii. The Petition and all cited exhibits therein;

iii. Declaration of David B. Lett (Exhibit 1002) and all exhibits cited therein;

iv. The Institution Decision (Paper 8);

v. All the exhibits cited in my declaration herein.

IV. APPLICABLE LEGAL STANDARDS

A. Level Of Ordinary Skill In The Art

14. My opinions in this declaration are based on the understandings of a person of ordinary skill in the art, which I understand is sometimes referred to as

an "ordinary artisan" or by the acronyms "POSITA" or "PHOSITA," as of the time of the invention, which I understand is here assumed to be the effective filing date (April 17, 2009) provisional application from which the '275 patent issued. I understand that the person of ordinary skill in the art is a hypothetical person who is presumed to have known the relevant art at the time of the invention. By "relevant," I mean relevant to the challenged claims of the '275 patent.

15. I understand that factual indicators of the level of ordinary skill in the art include the various prior art approaches employed, the types of problems encountered in the art, the rapidity with which innovations are made, the sophistication of the technology involved, and the educational background of those actively working in the field. I understand that, in assessing the level of skill of a person of ordinary skill in the art, one should consider the type of problems encountered in the art, the prior solutions to those problems found in the prior art references, the rapidity with which innovations are made, the sophistication of the technology, the level of education of active workers in the field, and my own experience working with those of skill in the art at the time of the invention.

16. In this case, Mr. Lett has asserted in his declaration that a person of ordinary skill in the art as of the time of the '275 patent would have had:

> a degree in electrical engineering or a similar discipline, along with three-to-four years of experience with digital signal processing (DSP) and radio frequency (RF) tuning systems for satellite and/or cable

> communications. Additional education may substitute for professional experience, and significant work experience may substitute for formal education.

Ex. 1002 [Lett-Decl.] ¶ 31.

17. For the purposes of this declaration, I have applied Mr. Lett's proposed qualifications of a POSITA.

18. As further discussed below, my opinions as stated in this declaration are valid even if the Board adopts a slightly different level of ordinary skill in the art.

B. My Understanding Of Legal Standards

19. When considering the '275 patent and stating my opinions, I rely on the following legal standards as described to me by the attorneys for Entropic.

20. I understand that a patent claim is unpatentable if the claimed invention was anticipated by a prior art reference or would have been obvious to a person of ordinary skill in the art at the time of the purported invention.

21. I understand that anticipation requires that every limitation of the claim at issue be disclosed, either expressly or under principles of inherency, in a single prior art reference.

22. I understand that inherency may not be established by probabilities or possibilities. The mere fact that a certain thing may result from a given set of

circumstances is not sufficient. Instead, it must be proven that the claim limitation not expressly found in the reference necessarily follows from what is found there.

23. I understand that an obviousness analysis involves comparing a claim to the prior art to determine whether the claimed invention would have been obvious to a person of ordinary skill in the art at the time of the invention in view of the prior art and in light of the general knowledge in the art as a whole. I also understand that obviousness is ultimately a legal conclusion based on underlying facts of four general types, all of which must be considered: (1) the scope and content of the prior art; (2) the level of ordinary skill in the art; (3) the differences between the claimed invention and the prior art; and (4) any objective indicia of non-obviousness, including any praise of the invention.

24. I also understand that obviousness may be established under certain circumstances by combining or modifying the teachings of the prior art. Specific teachings, suggestions, or motivations to combine any first prior art reference with a second prior art reference can be explicit or implicit, but must have existed before the date of purported invention. I understand that prior art references themselves may be one source of a specific teaching or suggestion to combine features of the prior art, but that such suggestions or motivations to combine art may come from the knowledge that a person of ordinary skill in the art would have had.

25. I understand that a reference may be relied upon for all that it teaches, including uses beyond its primary purpose, but also including teachings that lead away from the invention. I understand that a reference may be said to teach away when a person of ordinary skill, upon reading the reference, would be discouraged from following the path set out in the reference, although the mere disclosure of alternative designs does not teach away.

26. I further understand that whether there is a reasonable expectation of success in combining references in a particular way is also relevant to the analysis.

27. I understand that it is improper to use hindsight to combine references or elements of references to reconstruct the invention using the claims as a guide. My analysis of the prior art is made from the perspective of a person of ordinary skill in the art at the time of the invention.

28. I understand that in order to be eligible as prior art in obviousness and therefore form a reference in one of the instituted grounds, a reference must be analogous art to the ’275 patent. I also understand that it is Petitioner’s burden to prove that their asserted references are analogous art to the ’275 patent.

29. I am not offering any legal opinions in this declaration nor am I qualified to do so. I only consider such legal standards in framing my opinions and conclusions as well as placing assertions made by Petitioner in the Petition into the proper context. Additionally, from a subject matter perspective, I understand that

the petitioner always has the burden of persuasion regarding a challenge of patentability of an invention under an inter partes review.

V. CLAIMS-AT-ISSUE (CLAIMS 1-76)

30. I understand that Petitioner has challenged the claims as follows:

- Ground A: Claims 1-3, 5, 7-13, 15, 17-20 as anticipated by Zhang under pre-AIA 35 § 102(b);
- Ground B: Claims 1-3, 5, 7-13, 15, 17-20 as obvious under pre-AIA § 103(a) based on Zhang;
- Ground C: Claims 2-3, 12-13 as obvious under pre-AIA § 103(a) based on Zhang in view of Pandey;
- Ground D: Claims 2, 12 as obvious under pre-AIA §103(a) based on Zhang in view of Zhang-933;
- Ground E: Claims 4, 14 as obvious under pre-AIA § 103(a) based on Zhang in view of Mirabbasi;
- Ground F: Claims 5-6, 15-16 as obvious under pre-AIA § 103(a) based on Zhang in view of Dong;
- Ground G: Claims 12-13 as obvious under pre-AIA § 103(a) based on Zhang in view of Mirabbasi and Pandey;
- Ground H: Claim 12 as obvious under pre-AIA § 103(a) based on Zhang in view of Mirabbasi and Zhang-933;

- Ground I: Claim 15-16 as obvious under pre-AIA § 103(a) based on Zhang in view of Mirabbasi and Dong.

VI. OPINIONS

31. Of claims 1-20, only claims 1 and 11 are in independent form. Claims 1 and 11 are only challenged in grounds A and B, both based on Zhang alone. Furthermore, Mr. Lett relies on his discussion of claim 1 for arguments against claim 11. Ex. 1002 [Lett-Decl.] ¶¶ 177-189.

32. Therefore, in this declaration, I address only claim 1, but those arguments equally apply to all claims 1-20.

33. Mr. Lett also presents "alternate arguments" to the extent "radio front end" and "digital front end" are means-plus-function limitations. Ex. 1002 [Lett-Decl.] ¶¶ 251-271. As I understand that Patent Owner does not contend that those terms are means-plus-function limitations, the "alternate arguments" in Mr. Lett's declaration are inapplicable on their own terms. Therefore, I do not address them here.

A. Overview: Zhang Is The Prior Art Considered And Rejected During Prosecution Because It Has A Fundamentally Different Architecture From The Patent.

34. Zhang is the cornerstone of each of Petitioner's grounds. Pet., 14-15. Although both Zhang and the '275 patent involve a digitized RF input signal, and, ultimately, output desired channels, the method by which they achieve this result is

critically different. Specifically, the ’275 patent selects desired channels from the digitized input signal. In contrast, Zhang performs no selection from the digitized input signal. Instead, it blindly extracts ***all*** channels, ***both*** desired ***and*** undesired, from the digitized input signal without performing any selection, and only later selects the desired channels from the extracted channels.

35. The Figure 2 embodiment of the ’275 patent, annotated below, is illustrative. There, the analog input RF signal (yellow) is first digitized in the analog to digital converters (yellow). Ex. 1001 [’275] 5:53-56. Then, a bank of N mixers (blue) selects N desired channels, without selecting any undesired channels, from the digitized input signal. *Id*., 5:56-61, 6:1-11. Specifically, each of the N mixer paths is responsible for extracting a desired channel from the digitized input signal. The selected desired channels are then output to demodulators (green). *Id*., 7:16-20.

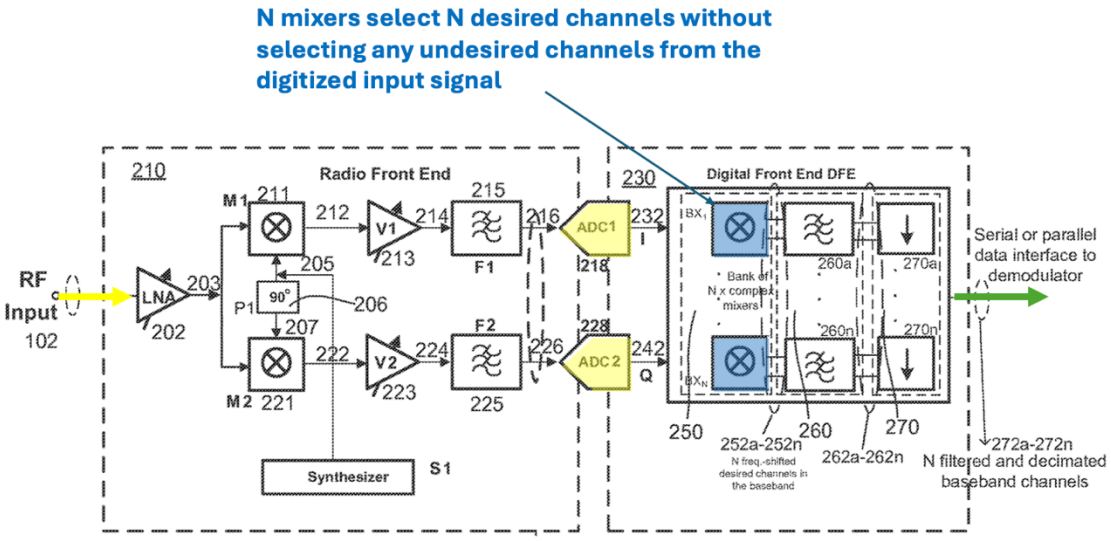

'275 Pat. Fig. 2 (modified and annotated)

36. In Zhang, creating an output of desired channels is achieved through a different method, which I explain in the context of Zhang's Figures 2 and 3, annotated below. Similar to the '275 patent, Zhang digitizes an input signal (yellow), consisting of "n" desired and undesired channels, in the analog to digital converter 220 (yellow). Ex. 1013 [Zhang] [0027] ("In this specific embodiment, ADC 220 is a high-speed ADC so that an entire signal band with n channels can be converted"). Note that the letter "n" in Zhang denotes the total number of channels in the "entire signal band," both desired and desired, whereas the letter "N" in the '275 patent denotes the number of desired channels.

37. Unlike the '275 patent, however, Zhang's method then blindly extracts from the digitized input signal ***all*** channels C_1-C_n, ***both*** desired ***and*** undesired, in the Digital Channel DeMux 230 (red) without making any selection.

Id., [0028] ("A digital channel demultiplexer 230 then demultiplexes the multi-channel digital RF signal into separate digital RF channels C_1 to C_n."). The exemplary architecture of Zhang's Digital Channel DeMux 230 is shown in Zhang's Figure 3, which I have included in the annotation below. Note that even though Zhang's Digital Channel DeMux 230 uses complex mixers similar to the '275 patent to extract channels, it extracts all channels, both desired and undesired, rather than selecting the desired ones, unlike the '275 patent.

38. Once all channels C_1-C_n, both desired and undesired, are extracted from the digitized input signal, the channels C_1-C_n are sent as the input to the digital selector 240 (blue). *Id*., [0028]. Using the channels C_1-C_n as the input, the digital channel selector 240 (blue) then selects the desired channels and outputs them to demodulators (green). *Id*., [0028] ("an n×m digital selector 240 receives the demultiplexed digital RF channels C_1 to C_n and then selects one or more of the RF channels D_1 to D_m from one or more of the digital RF channels C_1 to C_n."); [0039] ("In operation, digital selector 500 digitally selects one or more RF channels D_1 to D_m from the digital RF channels C_1 to C_n and then sends them to appropriate demodulators …."). Note that if the "n" channels extracted by the Digital Channel Demux of Zhang were all "desired" channels, there would be no need for a separate n×m digital selector. In other words, the arrangement of the

pieces of Zhang's Fig. 2 makes clear that all channels, not just the ones that are desired, are being processed.

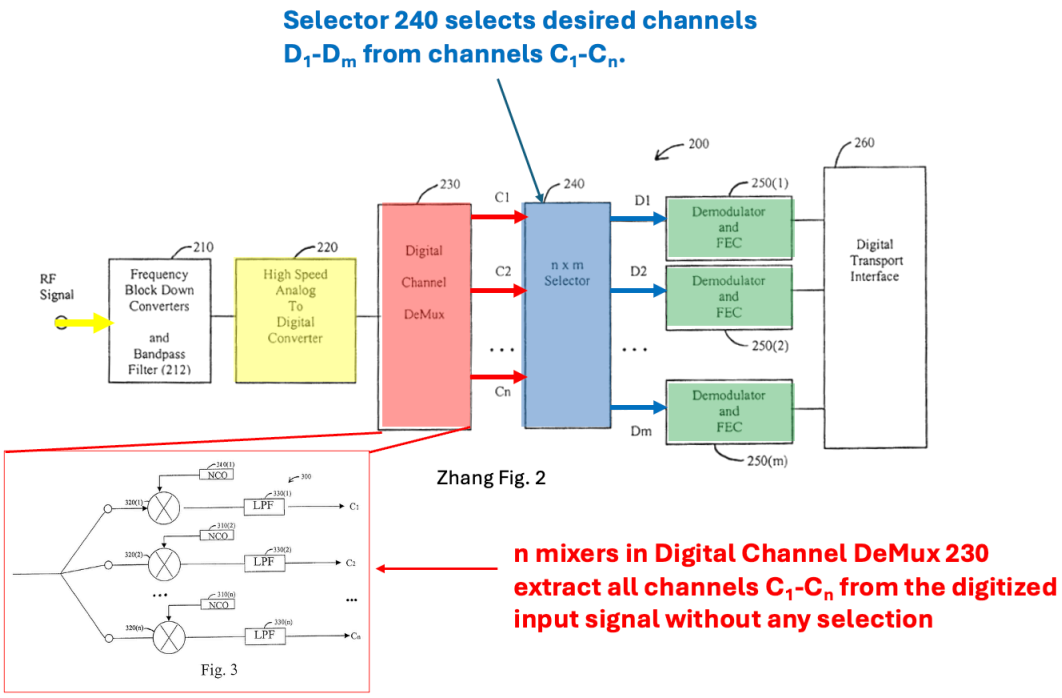

39. The fundamental distinction between Zhang and the '275 patent, and Zhang's failure to disclose the "selecting" step, was also recognized by the Examiner during prosecution of the '275 patent.

40. The applicant during prosecution listed U.S. Pat. 6,704,372 [Zhang-Patent] in an IDS:

U.S.PATENTS						Remove
Examiner Initial*	Cite No	Patent Number	Kind Code[1]	Issue Date	Name of Patentee or Applicant of cited Document	Pages,Columns,Lines where Relevant Passages or Relevant Figures Appear
	1	6704372		2004-03-09	Zhang et al.	

Ex. 2024 [IDS] 1.

41. The Zhang patent submitted by the applicant in the IDS is the patent that issued from the same application that published as the Zhang reference relied upon by the Petition. Ex. 1013 [Zhang] 1 (Appl. No.: 09/956,479); Ex. 2023 [Zhang-Patent] 1 (Appl. No.: 09/956,479). Both the Zhang patent submitted by the applicant in the IDS and the Petition's Zhang reference have substantially identical disclosures. *Compare generally* Ex. 1013 [Zhang] *with* Ex. 2023 [Zhang-Patent].

42. The Examiner stamped the IDS, confirming consideration of the Zhang patent:

ALL REFERENCES CONSIDERED EXCEPT WHERE LINED THROUGH. /B.J.J/

Ex. 2024 [IDS] 1-2.

43. The Examiner subsequently issued a notice of allowance, confirming that he had considered the references identified in the IDS, including Zhang:

> Claims 19-38 are allowed. ***The prior art comprising Information Disclosure Statements filed 16 August 2023 and 18 August 2023 was considered by the Examiner in view of the instant application.*** Although the prior art is from the applicant's other patents, i.e. US 8223,775, as part of Entropic Communications, LLC, the applicant, v. Charter communications, Inc. Civil Action and Entropic Communications, LLC v. DirectTV, LLC and Dish Network Corp., Civil Action, the prior art was related to a cable modem system and architecture but not as claimed in the instant application.

Ex. 2025 [NOA] 6.

44. The Examiner then confirmed that the considered prior art, including Zhang, did not disclose the claimed step of selecting desired channels from the digitized input signal, because the prior art instead used a demultiplexer to separate an input signal into all its constituent channels:

> The following is a statement of reasons for the indication of allowable subject matter: ***the prior art made of record*** teach a receiver for a wireless telecommunication system teach all of the adjacent frequency bands in the IF signal passed by a band pass filter in the radio frontend are converted to a digital signal by an ADC and then ***separated into their respective frequency bands by a channelizer*** where the separated frequency bands are processed in the normal manner by subsequent DSP devices, see Claxton et al. US 6,735,421. ***The prior art made of record do not teach selecting, by a digital frontend (DFE) coupled to the ADC, a plurality of desired channels from the digitized signal*** and outputting by the DFE, the selected plurality of desired channels to at least one demodulator as a digital datastream.

Ex. 2025 [NOA] 7.

45. A POSITA reviewing the ’275 patent’s prosecution history would understand that a reference similar to Zhang, which demultiplexes the digitized input signal into all its constituent channels does not perform the “selecting” step of the claims.

46. As I will explain in the following section, Petitioner relies on Zhang alone for the disclosure or obviousness of the same “selecting” step that the

Examiner found was missing in Zhang. In my opinion, the examiner was correct that Zhang was the prior art of the '275 patent that merely channelized the digitized input signal into its constituent channels, and did not select desired channels from the digitized input signal.

B. Petitioner Does Not Show "Selecting, By A Digital Frontend (DFE) … The Plurality Of Desired Channels From The Digitized Signal" (All Claims, All Grounds).

47. Limitation 1[e] recites "selecting, by a digitized frontend (DFE) coupled to the ADC, the plurality of desired channels from the digitized signal." Ex. 1001 ['275] cl. 1. Independent claim 11 recites a corresponding limitation. *Id*., cl. 11 (limitation 11[e]). Petitioner contends that Zhang alone discloses this limitation. Pet., 31-34 (contending Zhang alone discloses limitation 1[e]); 45-46 (relying on arguments for claim 1 for the alleged disclosure of claim 11).

48. Petitioner relies on two alternative theories. It first argues that Zhang's channels C_1-C_n constitute the claimed "plurality of desired channels." Pet., 31. In the alternative, Petitioner relies on Zhang's channels D_1-D_m as the claimed "plurality of desired channels." Pet., 33. As I explain below, both of Petitioner's alternatives fail.

1. <u>Zhang Channels C1-Cn Are Not The Claimed "Plurality Of Desired Channels"</u>

49. Petitioner first argues that Zhang's channels C_1-C_n disclose the claimed "plurality of desired channels" that are selected from the digitized input

signal. Pet., 31 ("selecting the target RF channels C_1-C_n (claimed 'desired channels')"). As discussed below, however, both Zhang and its prosecution history confirm that channels C_1-C_n are all channels in the entire signal band, both desired and undesired. Petitioner's arguments that Zhang discloses or renders obvious the claims contradict Zhang's express teachings.

a. Zhang's Channels C_1-C_n Are All Channels In The Entire Signal Band That Are Indiscriminately Demultiplexed Without Any Selection.

50. As I explain in this section, both Zhang and its prosecution history confirm that channels C_1-C_n are all channels in the entire signal band that are indiscriminately demultiplexed without any selection. Therefore, they are neither "desired channels," nor "selected."

51. The letter "n" in Zhang denotes the number of channels, both desired and undesired, in the "entire signal band." For example, Zhang explains:

> An ADC 220 then converts the down-converted multi-channel analog RF signal to a multi-channel digital RF signal. In this specific embodiment, ADC 220 is a high-speed ADC so that ***an entire signal band with n channels*** can be converted.

Ex. 1013 [Zhang] [0027].

52. Zhang then explains that its digital channel demultiplexer 230 demultiplexes the input RF signal into channels C_1-C_n:

> A digital channel demultiplexer 230 then demultiplexes the multi-channel digital RF signal into separate digital RF channels C_1 to C_n.

Ex. 1013 [Zhang] [0027]; *see also id*. Abstract ("A digital channel demultiplexer receives the multi-channel digital RF signal from the ADC and demultiplexes the multi-channel digital RF signal into separate digital RF channels").

53. Consequently, because "n" in Zhang denotes the total number of channels, both desired and undesired, the demultiplexed channels C_1 to C_n also include both desired and undesired channels.

54. The remainder of Zhang only further confirms that channels C_1 to C_n include both desired and undesired channels. Specifically, Zhang explains that, after channels C_1-C_n are extracted from the input RF signal, an n×m selector 240 selects the desired channels D_1-D_m from the total channels C_1-C_n:

> Still referring to FIG. 2, an n×m digital selector 240 receives the demultiplexed digital RF channels C_1 to C_n ***and then selects one or more of the RF channels D_1 to D_m from one or more of the digital RF channels C_1 to C_n***. … [O]nly the selected channels are later demodulated unlike the systems using RF tuners which demodulate all of the RF channels.

Ex. 1013 [Zhang] [0028]; *see also id*., [0039] ("In operation, digital ***selector 500 digitally selects one or more RF channels D_1 to D_m from the digital RF channels C_1 to C_n and then sends them to appropriate demodulators*** or output ports (not shown) through different data buses (not shown)."); [0042] ("For example, in FIG.

6, there are 35 separate RF channels C_1 to C_{35}. Of those RF channels, 20 RF channels D_1 to D_{20} are selected. Those 20 selected RF channels are sent to a set of demodulators 650(1 … 20) for demodulation.”).

55. This aspect of Zhang’s operation is shown in its Figure 2, annotated below, confirming that the digital channel demultiplexer 230 demultiplexes channels C_1-C_n containing both desired and undesired channels, and n×m selector 240 selecting desired channels D_1-D_m for transmission to demodulators 250 (green):

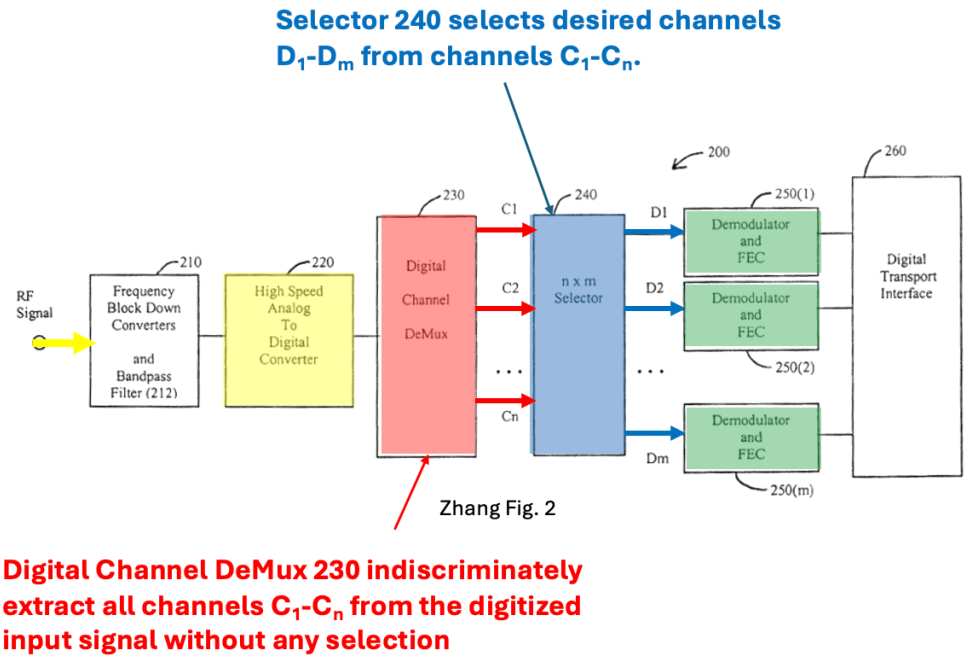

56. Zhang’s specification generally uses variables such as n and m, but it does provide one numerical example, which confirms that channels C_1-C_n are all the channels in the entire signal band. Zhang explains that in its Figure 6

embodiment, the frequency band of the input signal is 540-750 MHz. Ex. 1013 [Zhang] [0041]; Fig. 6. This means that the frequency band of the input signal is 750 – 540 = 210 MHz.

57. Zhang further discloses that in its Figure 6 embodiment, there are 35 channels C_1-C_{35} in the input signal. Ex. 1013 [Zhang] [0042]; Fig. 6. In other words, in Zhang's Figure 6 embodiment, n = 35. Zhang uses exemplary channel width of 6 MHz, which was typical at the time of Zhang (and, indeed, in North America is typical now). Ex. 1013 [Zhang] [0006]. The frequency bandwidth for 35 channels (C_1-C_{35}), at 6 MHz each, equals 210 MHz, obtained by multiplying 35 and 6. That is exactly the frequency bandwidth of the entire input signal, 540-750 MHz. Therefore, Zhang's only numerical example confirms that channels C_1-C_n are all the channels in the entire signal band. This comports with my understanding of a typical cable plant in the US, such as those that the set-top box designs that I managed were designed to attach to.

58. Zhang's prosecution history also confirms this. Zhang's European Patent Application claims recited "a digital channel demultiplexer … to demultiplex the digital RF signal into separate digital RF channels (C_1 … C_n)," and "a selector … configured to receive the separate digital RF channels and to select one or more separate digital RF channels (D_1... D_m)." Ex. 2016 [Zhang-EPO-Reply] 4.

59. The European Patent Office (EPO) noted that the independent claims "appear to be not new." Exhibit 2015 [EPO-Communication-Annex] 2-3. In response, the applicant explained that it is the selector that distinguished Zhang from its prior art, where all of the channels were demodulated:

> ***The provision of a selector allows the selection of specific RF channels for demodulation dependent on the specific application*** in which the apparatus is implemented (paragraph 37 of the application) this allows for power consumption to be optimized because only the selected channels are later demodulated ***unlike systems which demodulate all of the RF channels*** (e.g. [Reference] D1 and [Reference] D2). Thus, the invention provides apparatus which is not only faster, but also dissipates less heat, than systems such as those in D1 and D2, because fewer resources are required when demodulating only the selected RF channels (paragraph 25).

Ex. 2016 [Zhang-EPO-Reply] 2-3. Subsequently, the EPO accepted the Zhang applicant's argument and allowed the claims without any further rejection. Ex. 2017 [EPO-Grant-Intent] 1.

60. A POSITA reviewing the above would recognize that from Zhang's applicant's own perspective, the digital channel demultiplexer 230, like Zhang's prior art, demultiplexed all channels (both desired and undesired) without performing any selection, and it was Zhang's selector that, unlike Zhang's prior art, only transmitted desired channels to demodulators.

61. Thus, Zhang's prosecution history confirms its express disclosures in its specification that channels C_1-C_n encompass all channels in the entire signal band, both desired and undesired.

62. Petitioner first relies on the fact that Zhang's Digital Channel DeMux 230 in an embodiment is implemented through complex mixers and argues that because the '275 patent also relies on complex mixers to extract channels, it supposedly follows that channels C_1-C_n are the claimed "desired channels." Pet., 33.

63. But, as explained above, even though Zhang and the '275 patent both use complex mixers to extract channels from the digitized input signal, Zhang's mixers, unlike the '275 patent's mixers, extract ***all*** channels, ***both*** desired ***and*** undesired, from the digitized input signal. This is shown below by adding additional annotations (red) to Petitioner's annotation comparing Zhang Figure 3 with the '275 patent Figure 2 (at Pet., 33). As can be seen in the figures and explained in more detail below, in Zhang, the number of complex multipliers 320 (1…n) is the same number "n" as the number of all channels, both desired and undesired, in the entire signal band. In contrast, the number of mixers N in the '275 patent is the number of desired channels.

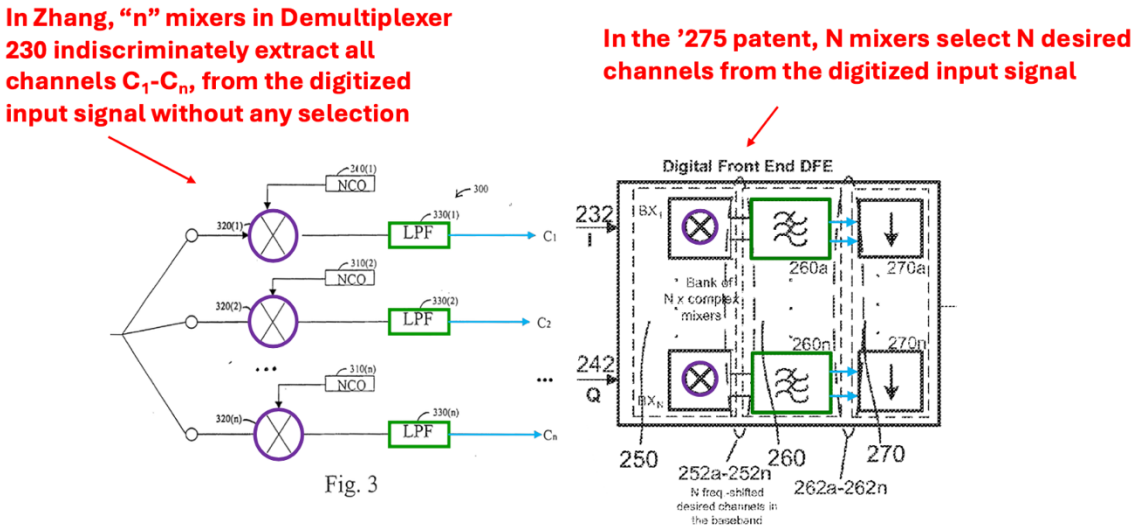

Ex. 1013, Fig. 3 (annotated) **Ex. 1001, Fig. 2 (excerpted/annotated)**

64. At a high level, if Zhang's Figure 3 down converted and output only desired channels, there would have been no need for the subsequent channel selector 240 to select desired channels D_1-D_m from channels C_1-C_n. This is in contrast to the '275 patent's Figure 2, where the output of the Digital Front End is sent to demodulators because the down conversion and selection in the Digital Front End is only for the desired channels. Details of Zhang's Figure 3 confirm this distinction.

65. Zhang explains that its Figure 3 "can be used to implement digital channel demultiplexer 230 of Fig. 2." Ex. 1013 [Zhang] [0030] (cited by Pet., 25). Zhang further explains that its Figure 3 contains "complex multipliers 320 (1 …n)." Ex. 1013 [Zhang] [0030]. These "complex multipliers 320 (1 …n)" are the complex mixers relied upon by Petitioner. Pet., 25. It can be readily shown, however, that Zhang's complex mixers 320 (1….n) extract both desired and

undesired channels from the digitized input RF signal. First, Zhang confirms that the output of its Figure 3 circuitry is channels C_1 to C_n. Ex. 1013 [Zhang] [0032] ("Digital tuner circuit 300 then outputs the separated RF channels C_1 to C_n, each RF channel being centered at the baseband."). As I explained above, Zhang is clear that channels C_1-C_n include both desired and undesired channels.

66. Second, there are "n" complex multipliers 320 (1…n), each used for extracting a single channel. Ex. 1013 [Zhang] [0030] ("One chain of each of these elements is used for each RF channel."). As I also explained above, Zhang is clear that the number "n" in its disclosure denotes both desired and undesired in "entire signal band." Ex. 1013 [Zhang] [0027]. Thus, the number of complex multipliers 320 (1…n) further confirms that Zhang's Figure 3 output both desired and undesired channels.

67. Petitioner attempts to capitalize on Zhang's use of the phrase "target channel" in its discussion of Figure 3 to argue that Figure 3 only outputs desired channels. Pet., 32 (citing Ex. 1013 [Zhang] [0032]). Petitioner is incorrect. Zhang, again, makes clear that its Figure 3 outputs both desired and undesired channels, and Petitioner's interpretation of Zhang's use of the phrase "target channel" is simply incorrect.

68. Specifically, in Zhang, as I explain further below with reference to its annotated Figure 3, the digitized input RF signal is sent in parallel to multiple data

paths, each of which is responsible for extracting one of the channels C_1-C_n from the digitized input signal. It is in this context that Zhang states that each data path is responsible for extracting its "target channel," which only means the specific one of channels C_1-C_n that the data path is responsible for. "Target channel," thus, does not refer to a "desired" channel but, rather, a particular channel for a particular data path, which may ultimately be desired or undesired. For example, the target channel for the fourth chain is C_4.

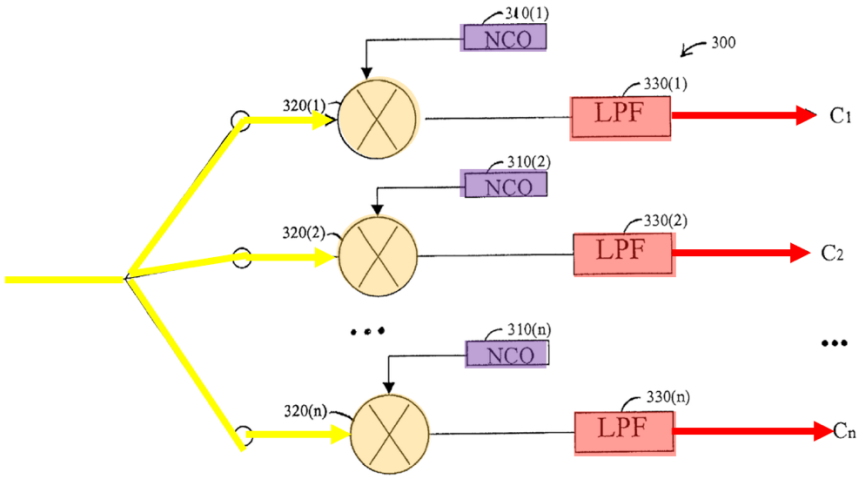

Fig. 3

69. Further, if Zhang's digital channel demultiplexer 230 (as implemented in its Figure 3) demultiplexed only desired channels, that would negate the function of the digital channel selector 240 that follows the digital channel demultiplexer 230. Again, the digital channel selector 240 takes the output of the digital channel demultiplexer 230 (channels C_1-C_n) as input, and selects and outputs desired channels D_1-D_m.

70. In Zhang's Figure 3 (above), the digitized input RF signal (yellow) is transmitted in parallel through multiple data paths, each of which is responsible for extracting one of channels C_1-C_n. Ex. 1013 [Zhang] [0030]-[0031]. In each data path, the way a channel is extracted is that a numerical local oscillator NLO 310 (purple) provides the frequency for the one of channels C_1-C_n for which that specific data path is responsible. *Id*., [0032]. A multiplier 320 (orange) multiplies the digitized input RF signal with the provided frequency to bring the channel to baseband. *Id*. Then a corresponding low pass filter LPF 330 (red) filters out all channels other than the one of C_1-C_n for that data path. *Id*. In this context, Zhang states that the complex mixer 320 (orange) is provided with the "characteristic frequency of a desired RF channel," which means the frequency of the one of channels C_1-C_n for which this specific data path is responsible. Similarly, Zhang states that the LPF (red) only permits the "target RF channel" to pass, which, again, means the specific one of channels C_1-C_n for which this specific data path is responsible. *Id*. Nothing in Zhang's discussion of its Figure 3 changes its consistent disclosure that channels C_1-C_n contain both desired and undesired channels.

71. Furthermore, Petitioner maps the claimed "digital front end" that selects the desired channels to the entirety of Zhang's Demultiplexer 230, not to one chain that outputs only one of channels C. Pet., 32 ("Zhang's digital channel

demultiplexer 230 is the digital frontend …"). Zhang's Demultiplexer 230 as a whole outputs all of channels C_1–C_n, not a subset or only "desired channels." *Id*. Ex. 1013 [Zhang] [0027]. As such, the element that Petitioner relies upon for the disclosure of "digital front end" does not select and output any specific channels—it simply outputs all channels. The fact that one circuit element within that larger structure coincidentally refers to the specific signal it is tasked with processing as "target" or "desired" does not change the fact that Demultiplexer 230 as a whole outputs all channels. Taken to its logical conclusion, Petitioner's argument removes all meaning from "desired channels" because all circuit elements always have a "target" or "desired" signal that they process.

72. Petitioner also relies on Zhang's claims to argue that channels C_1-C_n contain only desired channels. Pet., 32. First, I note that this is not a claim construction exercise focused on identifying the broadest reading of Zhang's claims. Rather, the question is what Zhang—including its claims, read in context—teaches a person of ordinary skill in the art. As I explain below, Zhang's claims closely follow Zhang's Figure 3 embodiment discussed above, and Petitioner misapprehends their disclosure—which, of course, cannot claim a system that is entirely different from Zhang's specification.

73. For example, Zhang's claims 34, 36, and 37 depend from independent claim 28. Claim 28 claims the function of Zhang's digital channel demultiplexer

in Zhang's Figure 3, which extracts both desired and undesired channels from the input signal, and recites "[a] method for demultiplexing a digital multi-channel RF signal into a plurality of separate content channels." As detailed below, claims 34, 36, and 37 recite various details of Zhang's digital channel demultiplexer 230 from Zhang's Figure 3, including functions of the mixers, local oscillators and low pass filters. As noted above, however, Zhang's discussion of its Figure 3 is the ***only*** disclosure in Zhang of "target channels" and "target frequencies," and Zhang's use of these phrases does not mean selecting only desired channels as the '275 patent does. Rather, it only refers, in context, to the specific one of channels C_1-C_n (consisting of both desired and undesired channels) for which the specific data path is responsible for extracting.

Zhang Claims	Zhang Fig. 3 (Annotated)
34. The method of claim 28 wherein the demultiplexing further comprises: **providing a plurality of select frequencies**, each select frequency being associated with a corresponding and separate RF channel; and **multiplying the at least one multi-channel RF signal** with each of the select frequencies to obtain separate RF channels. 36. The method of claim 34 further comprising **shifting the target RF channel to a baseband**. 37. The method of claim 34 further comprising **filtering undesired RF channels and passing only the target RF channel.** 38. The method of claim 37 wherein the filtering is achieved with a **low-pass filter (LPF)** 39. The method of claim 38 wherein the **LPF is a fine impulse response (FIR) filter.** 40. The method of claim 39 wherein the **FIR filter is a high-speed filter.** 41. The method of claim 34 wherein the select frequences are generated by **numeric control oscillators**.	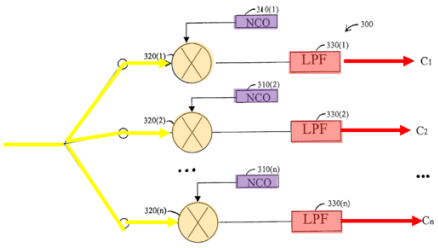 Fig. 3

74. Thus, as is clear from the above, similar to Zhang's Figure 3, "target RF channel" in Zhang's claims refers to the one of the channels C_1-C_n for which this path is responsible, and "undesired RF channels" refers to the remaining ones of channel C_1 to C_n other than the one for which this path is responsible. To repeat the earlier example, it means that the fourth chain outputs C_4 and no other channels. But again, all chains that together form the demultiplexer 230 collectively output all channels C_1-C_n.

75. Petitioner also relies on Zhang's statement that "RF channels C_1 to C_n contain channels that are selected or used by a subscriber." Pet., 32 (quoting Exhibit 1013 [Zhang] [0028]). But this portion of Zhang does not state that channels C_1 to C_n contain "only" desired channels, as the claims require. Instead, in context (reproduced below in full), this statement in Zhang simply means that the "channels that are selected or used by a subscriber" are the desired channels D_1-D_m selected by Selector 240, and are contained within the broader set of "RF channels C_1 to C_n" from which they are selected:

> Still referring to FIG. 2, an n×m digital selector 240 receives the demultiplexed digital RF channels C_1 to C_n and then selects one or more of the RF channels D_1 to D_m from one or more of the digital RF channels C_1 to C_n. RF channels C_1 to C_n contain content channels that are selected or used by a subscriber. Channel-search capabilities of the digital

> selector 240 renders it much faster than traditional analog channel switching through RF tuners.

Ex. 1013 [Zhang] [0028]; *see also id*., [0027] ("an entire signal band with n channels can be converted.").

76. For the foregoing reasons, Zhang channels C_1-C_n are neither "desired channels" nor "selected." Rather, they are all the channels in the entire signal band, indiscriminately demultiplexed.

b. Petitioner Does Not Show Other Claim Limitations If It Relies On Zhang Channels C_1-C_n As The Claimed "Desired Channels"

77. Irrespective of whether Zhang channels C_1-C_n are "desired" or "selected," to the extent Petitioner relies on Zhang's channels C_1-C_n as the claimed "desired channels," then it fails to show the subsequent limitation 1[f].

78. Limitation 1[f] recites "outputting … ***the selected plurality of desired channels*** to at least one demodulator …" "The selected plurality of desired channels" that is provided in limitation 1[f] is the same "plurality of desired channels" that were "select[ed]" in limitation 1[e]. Ex. 1001 ['275] ("selecting, by the digital frontend (DFE) coupled to the ADC, the plurality of desired channels from the digitized signal."). Thus, the claims require that the same "plurality of desired channels" be (1) selected in limitation 1[e] and (2) output to demodulators in limitation 1[f]. But, as explained below, Zhang does not output channels C_1-C_n

to demodulators and, to the extent Petitioner relies on channels C_1-C_n for limitation 1[e], it fails to show limitation 1[f].

79. Zhang explains that it selects channels D_1-D_m from channels C_1-C_n, and it is channels D_1-D_m, not channels C_1-C_n, that are output to demodulators:

> A digital channel demultiplexer 230 then demultiplexes the multi-channel digital RF signal into separate digital RF channels C_1 to C_n. … [A]n n x m digital selector 240 receives the demultiplexed digital RF channels C_1 to C_n and then selects one or more of the RF channels D_1 to D_m from one or more of the digital RF channels C_1 to C_n.
>
> […]
>
> The m selected RF channels are then fed into respective demodulators 250(1), 250(2), … 250(m).

Ex. 1013 [Zhang] [0028]-[0029].

80. The number m of demodulators 250(1)-250(m) further confirms that it is channels D_1-D_m, not C_1-C_n, that are sent to demodulators.

81. Zhang further confirms that channels D_1-D_m are the channels sent to demodulators in its discussion of its Figure 5, which implements the Selector 240:

> In operation, digital selector 500 digitally ***selects one or more RF channels D_1 to D_m*** from the digital RF channels C_1 to C_n and ***then sends them to appropriate demodulators*** or output ports ….

Ex. 1013 [Zhang] [0039].

82. That channels D_1-D_m, not C_1-C_n, are sent to demodulators is also readily apparent from Zhang's Figure 2 (annotations added):

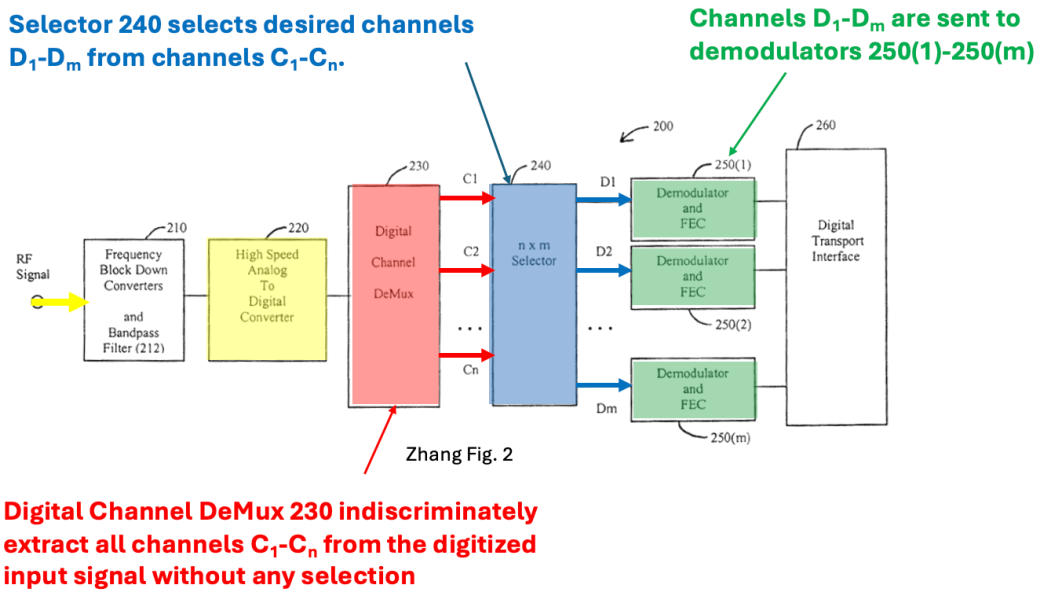

83. Petitioner appears to rely on the theoretical happenstance that all channels C_1-C_n may, in retrospect, happen to be subsequently selected by Selector 240 and be sent to demodulators. Pet., 35. This argument fails for multiple reasons.

84. First, Petitioner does not point to any disclosure in Zhang that teaches or suggests that all extracted channels C_1-C_n could be the desired channels D_1-D_m. Instead, Zhang by design extracts more channels from the input signal than are desired (*i.e.*, Zhang extracts all channels) so that new desired channels can be selected without having to extract them from the input signal. Ex. 1013 [Zhang]

[0028] ("Channel-search capabilities of the digital selector 240 renders it much faster than traditional analog channel Switching through RF tuners.").

85. Second, the theoretical happenstance that all extracted channels C_1-C_n could subsequently be selected as the desired channels D_1-D_m does not disclose a method that selects desired channels instead of blindly extracting all channels.

86. For the foregoing reasons, to the extent Petitioner relies on Zhang's channels C_1-C_n as the claimed "desired channels," then it fails to show the subsequent limitation 1[f].

2. Zhang's Channels D_1-D_m Are Not Selected "From The Digitized [Input] Signal."

87. Petitioner's reliance on channels D_1-D_m as the claimed "plurality of desired channels" also fails to disclose or render obvious the claims because channels D_1-D_m are not selected "from the digitized signal," as required.

88. Limitations 1[b] and 1[d] recite, respectively, receiving "an input signal," and "digitizing, by an ***analog-to-digital converter (ADC)*** coupled to the radio front end, the processed input signal to ***generate a digitized signal***."

89. As shown in Zhang's Figure 2, annotated below, for the disclosure of the claimed "digitized signal" generated by the ADC in limitation 1[d], Petitioner relies on the Zhang's Analog To Digital Converter 220, which generates a digitized signal and inputs that digitized signal to the Channel Demultiplexer 230. Pet., 22, 30-31.

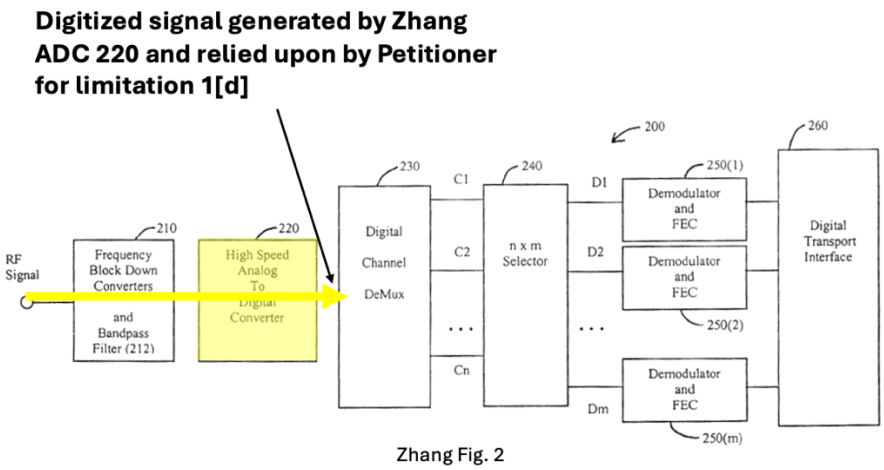

90. Limitation 1[e] further requires "selecting … the plurality of desired channels ***from the digitized signal***." The antecedent basis for "the digitized signal" of limitation 1[e] is the digitized signal that is generated by the ADC in limitation 1[d].

91. As I will explains below with reference to Zhang's annotated Figure 2, channels D_1-D_m (blue) in Zhang are not selected "from the digitized signal" (yellow) identified by Petitioner as the claimed "digitized signal." Instead, channels D_1-D_m (blue) are selected from the already extracted channels C_1-C_n (red):

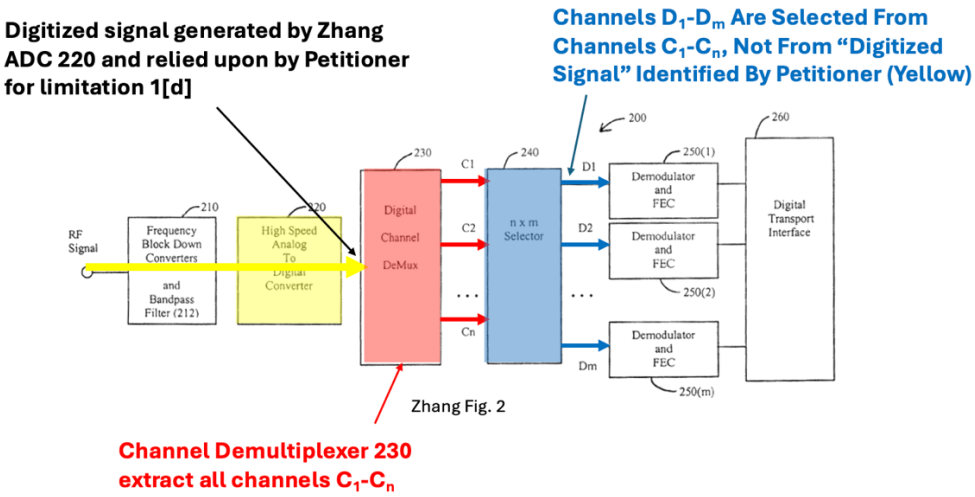

92. Zhang states that the n×m selector 240 selects the desired channels D_1-D_m from the extracted channels C_1-C_n, not from the digitized input signal:

> Still referring to FIG. 2, an n×m digital selector 240 receives the demultiplexed digital RF channels C_1 to C_n and then ***selects one or more of the RF channels D_1 to D_m from one or more of the digital RF channels C_1 to C_n.***

Ex. 1013 [Zhang] [0028]; *see also id.*, [0039] ("digital selector 500 digitally ***selects one or more RF channels D_1 to D_m from the digital RF channels C_1 to C_n.***").

93. Zhang's Figure 5 shows an exemplary implementation of Zhang's selector 240, and confirms that Zhang selects the desired channels D_1-D_m from extracted channels C_1-C_n, not from the digitized input signal. Ex. 1013 [Zhang] [0038] ("FIG. 5 is a simplified high-level schematic diagram of an n×m digital

selector 500, which in some embodiments of the present invention, can be used to implement digital selector 240 of FIG. 2.”).

94. In Zhang’s Figure 5, annotated below, channels C_1-C_n (red), which were extracted from the digitized input signal by the digital channel demultiplexer 230, enter the selector on the left-hand side of the figure. The circuitry within the selector 240 selects and outputs desired channels D_1-D_m (blue) from the channels C_1-C_n:

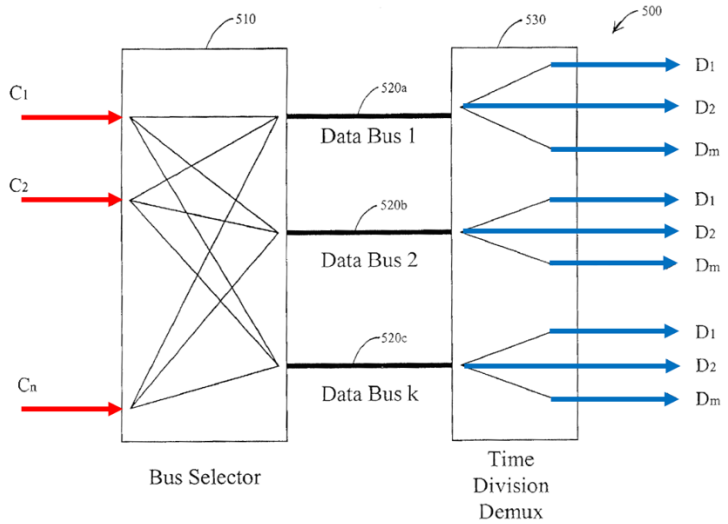

Fig. 5

95. Zhang’s explanation of Figure 5 also confirms that the desired channels D_1-D_m are selected from channels C_1-C_n, not from the digitized input signal. Ex. 1013 [Zhang] [0039] (“digital selector 500 digitally ***selects one or more RF channels D_1 to D_m from the digital RF channels C_1 to C_n*** and then sends them to appropriate demodulators ….”).

96. Zhang's channels C_1-C_n are not the "digitized signal" identified by Petitioner. As shown above, Petitioner relies on the digital signal generated by Zhang's ADC 220 and input into Channel Demultiplexer 230 as the claimed "digitized signal." Pet., 30-31. Selecting from the demultiplexed channels C_1-C_n is not the same as selecting "from the digitized signal" identified in Zhang by Petitioner. Rather, channels C_1-C_n are extracted (*i.e.*, separated out), non-contiguous portions of the digitized input signal, generally with many missing frequency ranges as compared to the input signal.

97. First, C_1-C_n are channels that are separated out from the digitized input signal into distinct channels. Ex. 1013 [Zhang] [0028] ("A digital channel demultiplexer 230 then demultiplexes the multi-channel digital RF signal into separate digital RF channels C_1 to C_n."); [0010] ("A digital channel demultiplexer receives the multi-channel digital RF signal from the ADC and demultiplexes the multi-channel digital RF signal into separate digital RF channels.").

98. Second, channels C_1-C_n together are generally only a non-contiguous subset of the digitized input signal. This is because there are frequency ranges that exist in the digitized input signal, including between the channels, that do not exist in the channels C_1-C_n. For example, frequency guard bands are generally placed between different RF channels in an input signal to avoid interference between

channels. These exemplary frequency ranges would not be included in the demultiplexed channels C_1-C_n, even though they exist in the digitized input signal.

99. Both the ’275 patent’s specification and its claims confirm that Zhang’s selection of desired channels D_1-D_m from channels C_1-C_n does not disclose selecting the desired channels “from the digitized signal.” In all embodiments of the ’275 patent, the desired channels are selected from the digitized input signal. For example, in the ’275 patent’s Figure 2, annotated below, the input signal (yellow) is first digitized in the analog to digital converters (yellow). Ex. 1001 [’275] 5:48-51. Then, a bank of N mixers (blue) selects N desired channels from the digitized input signal. *Id*., 5:51-55, 5:63-6:6. The selected desired channels are then output to demodulators (green). *Id*., 7:10-14. This is in contrast to Zhang where, as explained above, the digitized input signal is demultiplexed into channels C_1-C_n, with those separate outputs C_1-C_n sent to the digital selector 240. The desired channels are then selected by the digital selector 240 from channels C_1-C_n, not from the digitized input signal.

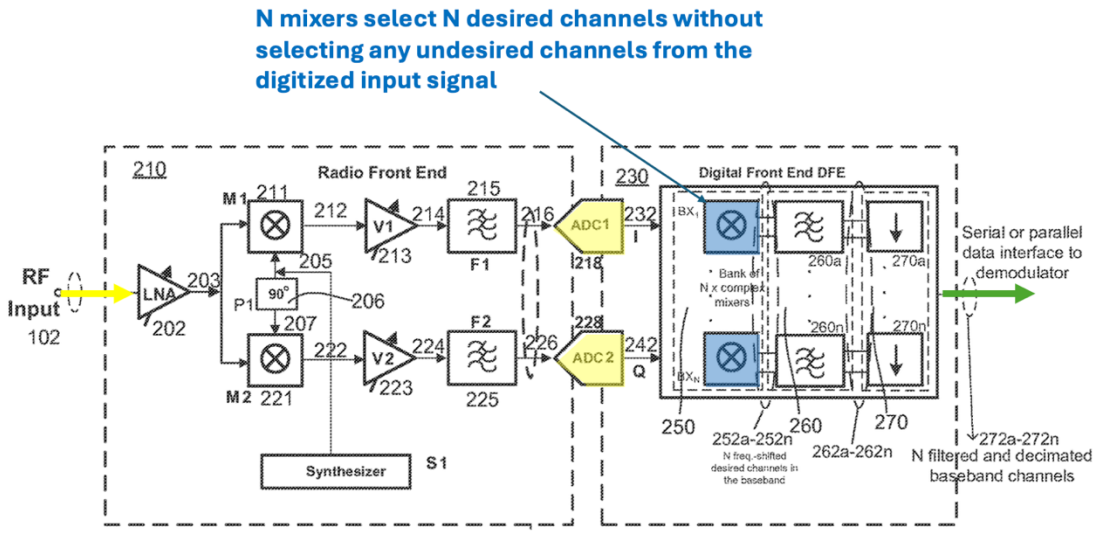

'275 Pat. Fig. 2 (modified and annotated)

100. A comparison of the claims of the '275 patent with claims in US 11,381,866, which has a common specification with the '275 patent, further confirms the significance of selecting the desired channels "from the digitized signal." For example, claim 1 of the '866 patent recites a "digital front end" that is configured to "concurrently select and provide each of the plurality of desired channels without providing any of the plurality of undesired channels," but does not expressly recite that the selection must be "from the digitized signal." Ex. 2018 ['866-Patent] cl. 1. This is shown in the table below:

’275 Patent Limitation 1[e]	’866 Patent Limitation 1[b]
“selecting, by a digital frontend (DFE) coupled to the ADC, the plurality of desired channels from the digitized signal”	“a digital frontend (DFE) coupled to the wideband ADC, wherein the DFE is configured to concurrently select and provide each of the plurality of desired channels, via a serial interface, without providing any of the plurality of undesired channels.”

101. As is shown in the comparison above, while claim 1 of the ’275 patent recites that the selection of desired channels must be “from the digitized signal,” claim 1 of the ’866 patent does not explicitly recite the source signal from which the selection must be performed. If claim 1 of the ‘275 patent were read so broadly as to cover the selection of Zhang’s channels D_1-D_m, then the language of the claim requiring that these channels be selected “from the digitized signal” would be rendered superfluous.

102. For all these reasons, Petitioner’s reliance on Zhang’s channels D_1-D_m as the claimed “plurality of desired channels” fails to meet the claims because they are not selected “from the digitized signal” as required.

VII. CONCLUSION

103. For the foregoing reasons, based on my expertise and experience and the record of this case that I have reviewed, it is my opinion that the challenged claims are not shown to be disclosed or obvious.

104. I understand that my opinions discussed above support a legal conclusion that the challenged claims are nonobvious.

In signing this declaration, I recognize that the declaration will be filed as evidence in a contested case before the Patent Trial and Appeal Board of the United States Patent and Trademark Office. I also recognize that I may be subject to cross-examination in the case and that cross-examination will take place within the United States. If cross-examination is required, I will appear for cross-examination within the United States during the time allotted.

I hereby declare that all statements made herein of my own knowledge are true and all statements made herein on information and belief were and are believed by me to be true, and that all statements herein were and are made with the knowledge that willful false statements and the like so made are punishable by fine or imprisonment, or both, under section 1001 of Title 18 of the United States Code and that any such willful false statements may jeopardize the validity of the application or any patents issued thereon.

Respectfully submitted,

Dated: August 4, 2025

Samuel H. Russ

Samuel H. Russ, Ph.D.