UNITED STATES PATENT AND TRADEMARK OFFICE

BEFORE THE PATENT TRIAL AND APPEAL BOARD

COMCAST CABLE COMMUNICATIONS, LLC,
Petitioner,

v.

ENTROPIC COMMUNICATIONS, LLC,
Patent Owner.

Case IPR2024-00432
Patent 9,210,362 B2

PETITIONER'S REPLY TO PATENT OWNER'S RESPONSE UNDER 37 C.F.R. § 42.23

TABLE OF CONTENTS

I. INTRODUCTION 1

II. THE PETITION EXPLAINED HOW ZHANG TAUGHT SELECTING DESIRED CHANNELS IN TWO SEPARATE WAYS, USING THE SAME CIRCUITRY SET FORTH IN THE '362 PATENT 2

III. THAT ZHANG'S D_1-D_M ARE SELECTED DESIRED TELEVISION CHANNELS IS UNDISPUTED AND ELEMENT [1D] DOES NOT LIMIT THE MANNER IN WHICH THEY ARE SELECTED 7

A. Zhang's Demultiplexer 230, in Combination with Selector 240, Discloses Element [1D]'s "Digital Circuitry" 7

B. Zhang's Demultiplexer 230, in Combination with Selector 240, Performs Element [1D]'s Functional Language 8

C. Zhang Teaches the Claims Even If the Claims Require Selection Directly from the Digitized Plurality of Frequencies 13

IV. ZHANG'S C_1-C_N ARE SELECTED DESIRED TELEVISION CHANNELS UNDER EITHER THE CORRECT CONSTRUCTION OR THE INCORRECT CONSTRUCTION TACITLY ARGUED BY PO 14

A. Zhang Discloses that Channels C_1-C_n are "desired channels" even under PO's Construction 15

1. Zhang Expressly Identifies C_1-C_n as "desired channels" and that the Number of Them May Be Less Than the Number of Channels Received 15

2. Contrary to the POR Assertions, Petitioner's Expert Repeatably Explains that "n" is a Variable Less Than or Equal To the Number of Channels in the Plurality of Frequencies. 18

3. PO's Expert Did Not Consider Zhang's Express Disclosures Where "n" Is Less Than All Channels in the

Plurality of Frequencies, and Remains Willfully Blind to Them 19

4. The Presence of Selector 240 Does Not Require that C_1-C_n Include All Channels, Desired and Undesired.....20

5. The Prosecution History of Zhang's European Patent Does Not Require that C_1-C_n in Zhang Include All Channels 21

B. PO Misconstrues "select said plurality of desired television channels" to also Require Not Selecting Any Undesired Channels 22

C. It is Undisputed that Zhang's Channels C_1-C_n Are Selected Desired Channels under the Proper Claim Construction 25

V. PETITIONER'S ALTERNATIVE ARGUMENTS THAT C_1-C_N AND D_1-D_M EACH DISCLOSE THE CLAIMED "DESIRED TELEVISION CHANNELS" ARE ENTIRELY CONSISTENT 26

VI. CONCLUSION.....26

TABLE OF AUTHORITIES

Cases

Clare v. Chrysler Group LLC,
819 F.3d 1323 (Fed. Cir. 2016).....14

Curtiss-Wright Flow Control Corp. v. Velan, Inc.,
438 F.3d 1374 (Fed. Cir. 2006).....13

Info-Hold, Inc. v. Applied Media Techs. Corp.,
783 F.3d 1262 (Fed. Cir. 2015).....12

Nobel Biocare Servs. AG v. Instradent U.S., Inc.,
903 F.3d 1365 (Fed. Cir. 2018).....24

SightSound Techs., LLC v. Apple Inc.,
809 F.3d 1307 (Fed. Cir. 2015).....13

Superguide Corp. v. DirecTV Enterprises, Inc.,
358 F.3d 870 (Fed. Cir. 2004).....24

Upjohn Co. v. Mova Pharm. Corp.,
225 F.3d 1306 (Fed. Cir. 2000)..... 19, 21, 24

Vivid Techs., Inc. v. Am. Sci. & Eng'g, Inc.,
200 F.3d 795 (Fed. Cir. 1999).....22

Rules

Fed. R. Evid. 702(b)..... 19, 21, 24

Regulations

37 C.F.R. § 42.65 21

37 C.F.R. § 42.65(a)..... 19, 24

EXHIBITS

Previously Filed:

Ex. 1001: U.S. Patent No. 9,210,362 ("the '362 patent")

Ex. 1002: Expert Declaration of David B. Lett

Ex. 1003: Curriculum Vitae of David B. Lett

Ex. 1004: Certified Prosecution History of the '362 patent

Ex. 1005: Certified Prosecution History of U.S. Patent No. 9,100,622

Ex. 1006: Certified Prosecution History of U.S. Patent No. 8,526,898

Ex. 1007: Certified Prosecution History of U.S. Provisional App. No. 61/170,526 ("'526 provisional")

Ex. 1008: Reserved

Ex. 1009: Reserved

Ex. 1010: Reserved

Ex. 1011: Reserved

Ex. 1012: Reserved

Ex. 1013: U.S. Pub. No. 2003/0056221 ("Zhang")

Ex. 1014: U.S. Patent No. 7,237,214 ("Pandey")

Ex. 1015: Excerpts of "IEEE Std 100-2000, The Authoritative Dictionary of IEEE Standards Terms, Seventh Edition" (IEEE Press. 2000) ("IEEE Std 100")

Ex. 1016: Excerpts of Jan M. Rabaey, "Digital Integrated Circuits: A Design Perspective" (Pearson, 2nd ed. 2002) ("Rabaey")

Ex. 1017: A. P. Chandrakasan, "Ultra Low Power Digital Signal

Processing," Proceedings of 9th International Conference on VLSI Design, Bangalore, India, 1996, pp. 352-357 ("Chandrakasan")

Ex. 1018: S. Mirabbasi and K. Martin, "Classical and Modern Receiver Architectures," IEEE Communications Magazine, vol. 38, no. 11, pp. 132-139, November 2000 ("Mirabbasi")

Ex. 1019: U.S. Patent No. 6,061,406 ("Carson")

Ex. 1020: U.S. Pub. No. 2006/0233147 ("Karabinis")

Ex. 1021: Data-Over-Cable Service Interface Specifications, DOCSIS 2.0, Radio Frequency Interface Specification, CM-SP-RFIv2.0-I11-060602

Ex. 1022: Certified File History (as of February 2, 2024) for *Ex Parte* Reexamination No. 90/019,255

Ex. 1023: Certified Prosecution History of U.S. Patent No. 9,100,363

Ex. 1024: Reserved

Ex. 1025: J. Crols and M. S. J. Steyaert, "Low-IF Topologies for High-Performance Analog Front Ends of Fully Integrated Receivers," IEEE Transactions on Circuits and Systems II: Analog and Digital Signal Processing, vol. 45, no. 3, pp. 269-282, March 1998 ("Crols")

Ex. 1026: U.S. Pub. No. 2007/0027943 ("Jensen '943")

Ex. 1027: U.S. Patents and Patent Applications Family Tree for U.S. Patent No. 9,210,362

Ex. 1028: Reserved

Ex. 1029: Entropic Communications, LLC v. Charter Communications, Inc., No. 2:22-cv-00125-JRG (E.D. Tex. June 26, 2023) (Claim Construction Memorandum Opinion and Order)

Ex. 1030: Reserved

Ex. 1031:	Reserved
Ex. 1032:	Reserved
Ex. 1033:	Excerpts of W. Ciciora, J. Farmer, D. Large, and M. Adams, "Modern Cable Television Technology: Video, Voice, and Data Communications" (2nd ed. 2004) ("Ciciora")
Ex. 1034:	Excerpts of J. Crols and M. Steyaert, "CMOS Wireless Transceiver Design" (1997)
Ex. 1035:	U.S. Patent No. 7,340,230 ("Khoini-Poorfard")
Ex. 1036:	U.S. Pub. No. 2003/0217362 ("Summers")
Ex. 1037:	U.S. Pub. No. 2006/0256799 ("Eng")
Ex. 1038:	U.S. Pub. No. 2006/0083335 ("Seendripu")
Ex. 1039:	Excerpts of Chris Bowick, "RF Circuit Design" (2nd ed. 2008)
Ex. 1040:	Reserved
Ex. 1041:	Excerpts of Roland Priemer, "Introductory Signal Processing" (1991)
Ex. 1042:	U.S. Patent No. 7,272,375 ("Tuttle")
Ex. 1043:	U.S. Patent No. 7,130,576 ("Gurantz")
Ex. 1044:	U.S. Patent No. 5,278,837 ("Kelley")
Ex. 1045:	Jeffrey H. Reed, "Software Radio: A Modern Approach to Radio Engineering" (2002)
Ex. 1046:	U.S. Patent No. 7,213,042 ("Cannon")
Ex. 1047:	Reserved
Ex. 1048:	Excerpts of William Buchanan, "Computer Busses" (2000) ("Buchanan")

Ex. 1049:	U.S. Patent No. 7,079,528 ("Ziegler")
Ex. 1050:	Excerpts of "Software Defined Radio: Enabling Technologies" (Walter Tuttlebee ed., 2003)
Exs. 1051-1072:	Reserved
Ex. 1073:	Expert Declaration of Sylvia Hall-Ellis, Ph.D
Ex. 1074	Reserved
Ex. 1075	U.S. Patent No. 6,791,995 ("Azenkot")
Ex. 1076	U.S. Patent No. 6,542,203 ("Shadwell")

Served (Not Filed):

Ex. 1077:	Second Expert Declaration of Sylvia Hall-Ellis, Ph.D

Filed Herewith:

Ex. 1078:	Second Expert Declaration of David B. Lett
Ex. 1079:	Transcript of Deposition of Dr. Russ

Comcast Cable Communications, LLC ("Petitioner") respectfully submits this reply brief in support of its petition for *inter partes* review of claims 1-20 of U.S. Patent No. 9,210,362 ("the '362 patent").

I. INTRODUCTION

Every claim of the '362 patent is invalid based on the Zhang grounds put forth in the Petition. Patent Owner's Response ("POR") asserts only that Zhang does not teach the portion of element [1D] requiring "*digital circuitry configured to: select said plurality of desired television channels from said digitized plurality of frequencies.*"[1] PO's sole argument is wrong for multiple reasons.

First, PO misapprehends Zhang and the digital circuitry relied upon in the Petition as meeting element [1D]. The Petition identified two instances of digital circuitry (Zhang's demultiplexer 230 alone, and demultiplexer 230 combined with selector 240) whose input is the recited "*digitized plurality of frequencies*" and whose output is the "*plurality of desired television channels*." Each of these two instances of circuitry thus selects the desired channels from the digitized plurality of frequencies, and meets element [1D]. Zhang even uses the same circuitry that is set

[1] The POR disputes that Zhang discloses element [11D] for the same reasons as element [1D], which has substantially similar scope. The discussion herein for element [1D] applies equally to element [11D].

forth in the ’362 patent.

Second, PO’s argument is tacitly based on an improper claim construction that imports the negative limitation “and not select any undesired channels” into the claims. Neither the claim language (which uses the open-ended “comprising” transition) nor the specification (which discloses the selection of undesired channels) supports rewriting the claims in this fashion. However, given the breadth of Zhang’s teachings and its startling similarity to the circuitry disclosed in the ’362 patent, Zhang teaches element [1D] even under PO’s tacit narrowing of the claim. In short, the claims are not patentable regardless of PO’s claim constructions.

As set forth below and in the Petition, all claims should be canceled. Ex. 1078, ¶¶ 1-32.

II. THE PETITION EXPLAINED HOW ZHANG TAUGHT SELECTING DESIRED CHANNELS IN TWO SEPARATE WAYS, USING THE SAME CIRCUITRY SET FORTH IN THE ’362 PATENT

Zhang’s features map precisely to the features of Figure 2 of the ’362 patent. Like that of the ’362 patent, Zhang’s system receives a wideband signal, down-converts and digitizes the signal, selects desired channels from the digitized signal, and transmits the selected channels to a demodulator. With respect to element [1D], the Petition showed that Zhang disclosed the claimed “*digital circuitry configured to: select said plurality of desired television channels from said digitized plurality of frequencies*” in two alternate ways, each of which is independently sufficient to

render the claims unpatentable. Pet., 8-11, 28-36.

First, Zhang's Digital Channel Demultiplexer 230 discloses digital circuitry that "select[s]" desired television channels C_1-C_n (**green**) by extracting them from the ADC's multi-channel digital RF signal output (**gold**). Pet., 29-31. Both Zhang's demultiplexer 230 (as detailed in Figure 3) and the '362 patent's digital front end 230 use banks of identical complex mixers (**purple**), each followed by a low pass filter (**green**), and a serial or parallel interface (**orange**) to select and output desired television channels to a demodulator. *Id*.

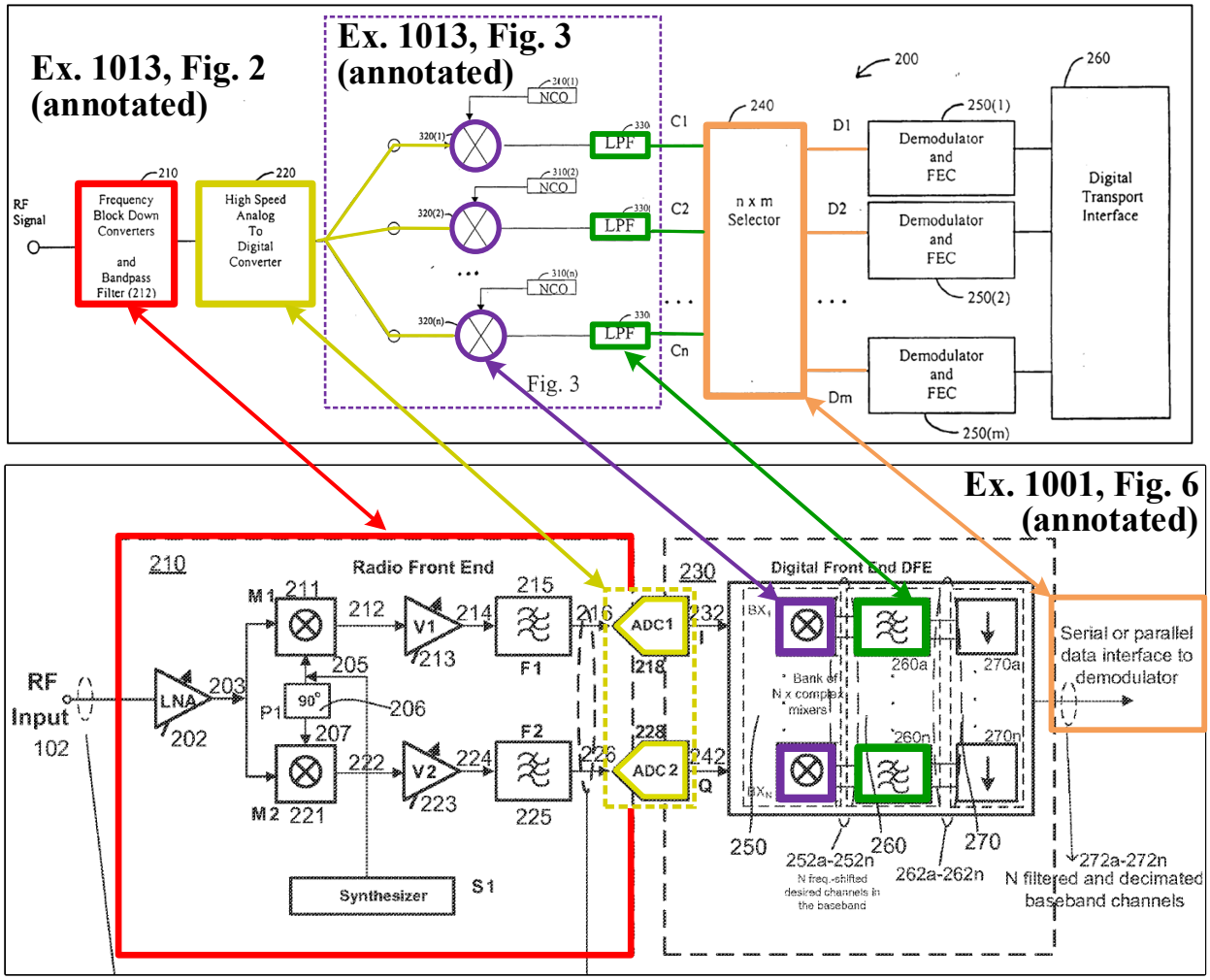

Pet., 11 (annotating Ex. 1001, Fig. 2 and Ex. 1013, Figs. 2, 3)

Second, in the alternate reading of Zhang, demultiplexer 230 together with all or part of selector 240 (as detailed in Figure 5) selects one or more channels from the plurality of digital frequencies received by the ADCs and outputs them as D_1-D_m (which may be a subset of C_1-C_n and which are also desired channels), in the same manner that the '362 patent's digital front end uses a serial or parallel interface to output desired television channels. Pet., 31-33.

Pet., 29 (Ex. 1013, Fig. 2, annotated)

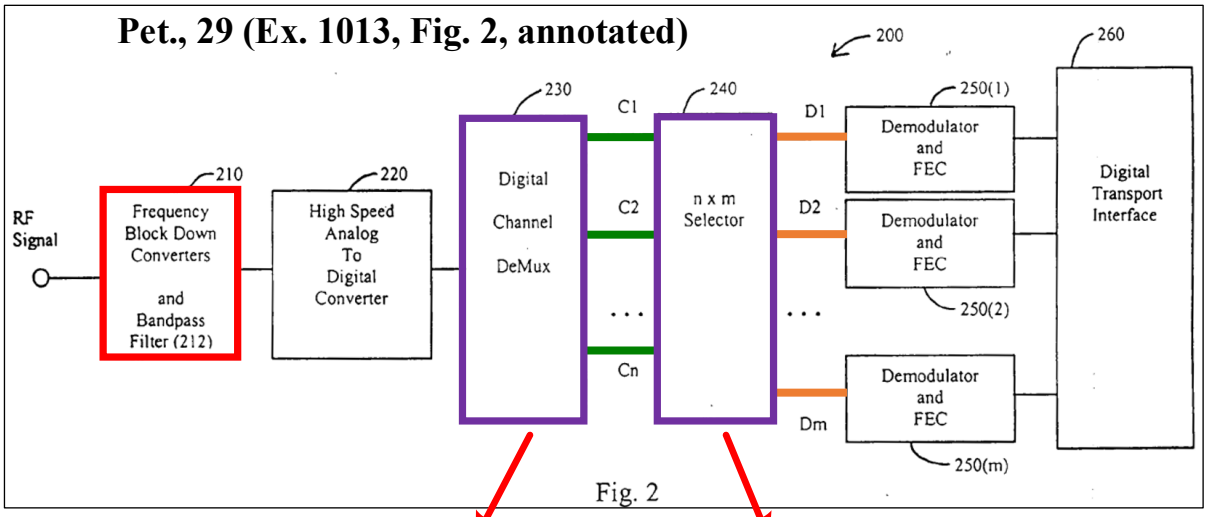

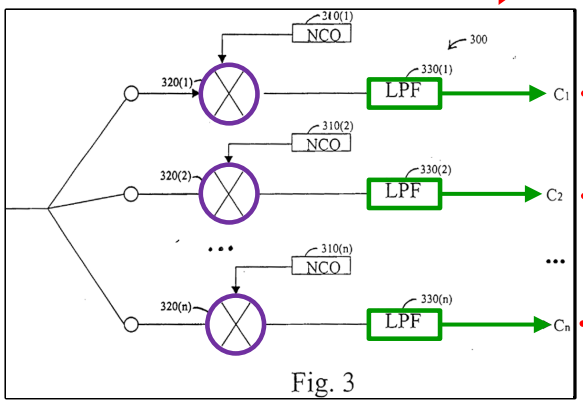

Pet., 30
(Ex. 1013, Fig. 3, annotated)

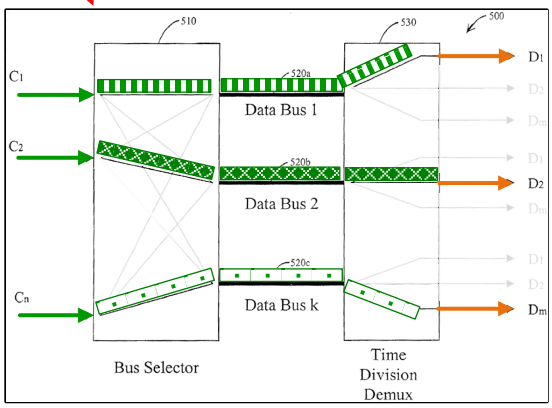

Pet., 33
(Ex. 1013, Fig. 5, annotated)

Thus, in the first reading of Zhang, channels C_1-C_n are the recited desired channels output by the digital circuitry demultiplexer 230. In the second, alternative, reading of Zhang, D_1-D_m are the desired channels output by the digital circuitry demultiplexer 230 combined with selector 240.

PO raises two unsustainable counterarguments. With respect to the Petition's first reading, PO argues that Zhang's circuitry does not "select said plurality of desired television channels" because channels C_1-C_n allegedly *must* include all channels, desired and undesired. This is wrong because Zhang mandates no such

thing. Zhang calls each of C_1-C_n a "desired channel," and the selected number "n" of them is a variable disclosed as being less than the number of channels in the digitized input signal. Ex. 1013, [0028], [0030], [0032]-[0033], [0042], claims 17, 21. Moreover, PO's tacit claim construction is wrong because the claims are open-ended and allow for the selection of undesired channels.

With respect to the Petition's second reading, PO admits that D_1-D_m are desired channels, but argues that they are not selected "from said digitized plurality of frequencies [from the wideband ADC]" because they are allegedly selected from C_1-C_n which were in turn selected from the digitized plurality of frequencies. POR, 2, 29-35. This argument is pure sophistry. In this second reading of Zhang, demultiplexer 230 in combination with all or part of the selector 240 comprise the "digital circuitry" that selects the desired channels from the digitized plurality of frequencies. D_1-D_m are undisputedly the desired channels output by this circuitry. The input of this circuitry is undisputedly the digitized plurality of frequencies coming from the ADCs. Thus, this digital circuitry is, in fact, "*configured to select said plurality of desired television channels from said digitized plurality of frequencies.*"

To the extent PO is relying on a tacit claim construction that somehow excludes the manner in which Zhang selects the desired channels D_1-D_m, PO is wrong. Other than requiring digital circuitry, element [1D] does not recite any

particular way the "select[ion]" is performed. Element [1D] thus does not exclude the particular manner in which Zhang selects and outputs desired television channels D_1-D_m from the digitized plurality of frequencies. Nor could it, since Zhang's circuitry matches the circuitry disclosed in the '362 patent.

Because it is so readily dispatched, PO's argument regarding this second reading of Zhang will be addressed first below.

III. THAT ZHANG'S D_1-D_m ARE SELECTED DESIRED TELEVISION CHANNELS IS UNDISPUTED AND ELEMENT [1D] DOES NOT LIMIT THE MANNER IN WHICH THEY ARE SELECTED

Element [1D] includes a structural limitation and a functional limitation. The functional limitation requires that the claimed wideband receiver system "*select said plurality of desired television channels from said digitized plurality of frequencies; and output said selected plurality of television channels to a demodulator as a digital datastream*." The structural limitation requires "digital circuitry configured to" carry out these functions. Zhang teaches both the structural and functional limitations of Element [1D].

A. Zhang's Demultiplexer 230, in Combination with Selector 240, Discloses Element [1D]'s "Digital Circuitry"

The Petition explains that the digital circuitry is taught by "Digital Channel Demultiplexer 230, either alone, or in combination with all or part of Digital Selector 240." Pet., 28-29. PO does not dispute that Zhang's Digital Channel Demultiplexer 230 and Digital Selector 240 comprise digital circuitry.

B. Zhang's Demultiplexer 230, in Combination with Selector 240, Performs Element [1D]'s Functional Language

PO alleges that the limitation of "*select said plurality of desired television channels from said digitized plurality of frequencies*" excludes Zhang's channels D_1-D_m from being the claimed "desired television channels" because channels D_1-D_m are selected from channels C_1-C_n, which are at baseband and thus purportedly not from the same plurality of frequencies as those of the digitized RF signal. *Id.* POR, 2, 9, 29-30. This argument attacks a strawman, and thus fails, because it ignores that the relied-upon "digital circuitry" in Zhang is more than just selector 240 (which is the part of the circuitry that receives channels C_1-C_n).

In actuality, the digital circuitry is demultiplexer 230, in combination with all or part of selector 240. Pet., 31, 32 ("the combination of Digital Channel Demultiplexer 230 and Digital Selector 240 teaches the claimed selecting of the desired channels, in that a channel that is both demultiplexed by 230 and switched by 240 to a demodulator is 'desired' and all other channels from the digital multi-channel RF signal are 'undesired.'"). Ex. 1078, ¶ 5. Thus, the input to the relied-upon digital circuitry (i.e., the input to demultiplexer 230) is the digitized plurality of frequencies output by the ADCs, *not* the individual channels C_1-C_n. And, the output of the relied-upon digital circuitry is D_1-D_m, which are the desired channels. It necessarily follows that the relied-upon digital circuitry is selecting the desired channels (D_1-D_m) "from the digitized plurality of frequencies."

This can be seen in the figure below, where the input to the relied-upon digital circuitry (coming from the bottom left side of the figure) is not the individual channels C_1-C_n output by demultiplexer 230, but rather the recited digitized plurality of frequencies.

Nothing in the claim language prevents the recited selection from being performed by a digital multiplexer 230 that selects individual channels from the incoming wideband digitized signal in combination with a digital selector 240 that passes certain of those signals along to a demodulator. Element [1D] does not exclude *any* particular manner in which desired television channels are selected from the plurality of frequencies and output to the demodulator, provided only that digital circuitry is used.

Pet., 29 (Ex. 1013, Fig. 2, annotated)

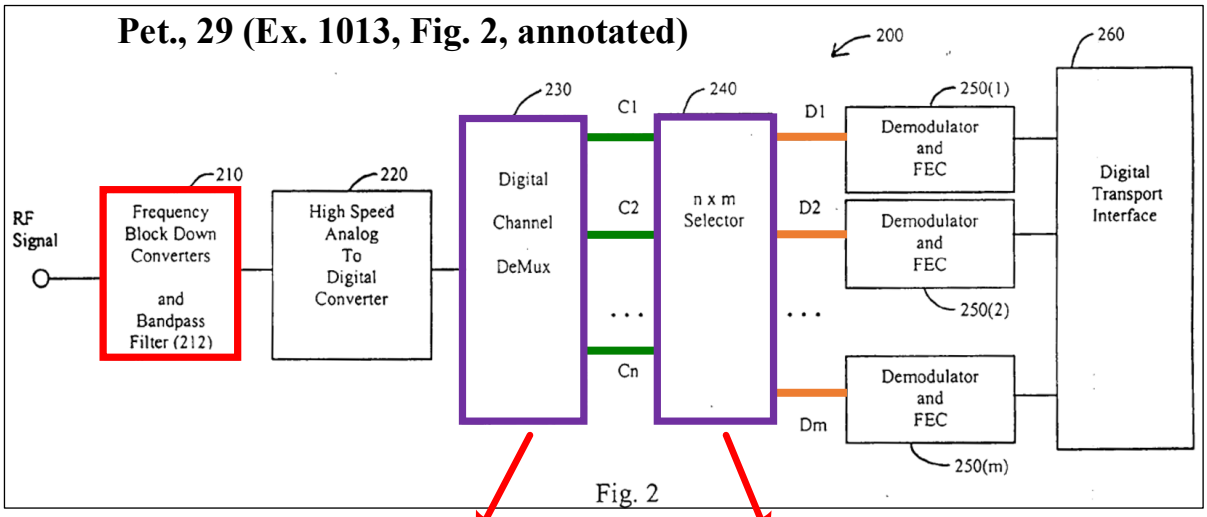

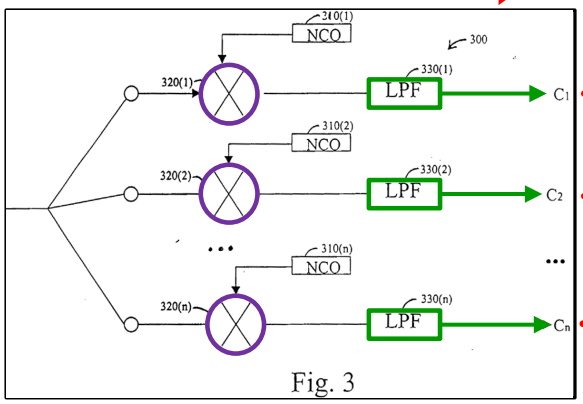

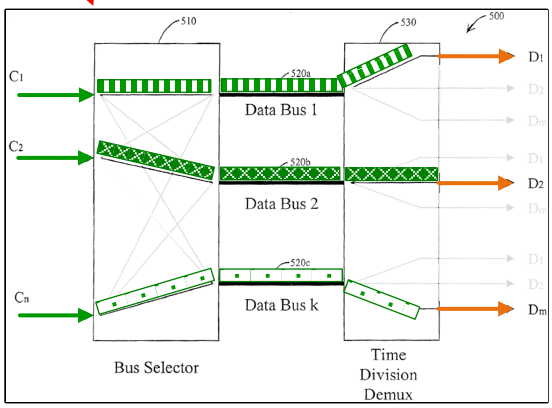

Pet., 30 (Ex. 1013, Fig. 3, annotated)

Pet., 33 (Ex. 1013, Fig. 5, annotated)

Indeed, the ’362 patent specification and Zhang use the same circuitry. Zhang’s digital circuitry (as shown in the red box below) that selects and outputs desired channels D_1-D_m matches the ’362 patent’s Figure 2 digital circuitry that selects and outputs desired channels 272a-272n. Pet., 9-10, 29-36, 72-73; Ex. 1013, [0028], [0030]-[0032], [0038]-[0039], [0042], [0048], claims 17, 21, 34, 36-41; Ex. 1002, ¶¶ 113-124; Ex. 1078, ¶ 6.

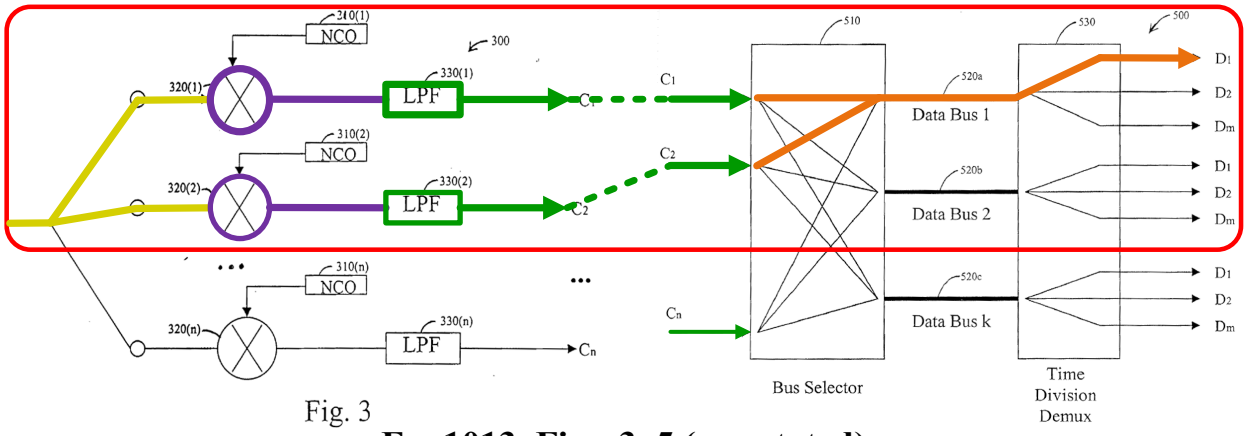

Fig. 3

Ex. 1013, Figs. 3, 5 (annotated)

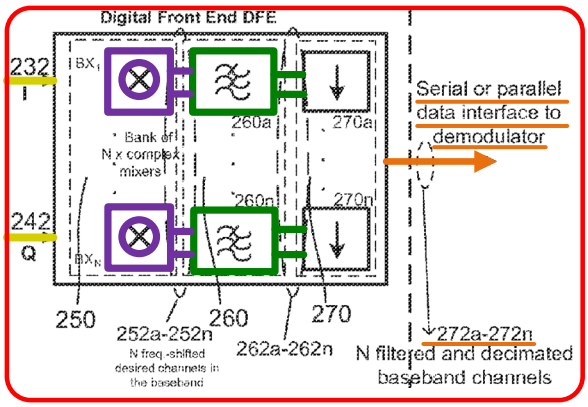

Ex. 1001, Fig. 2 (annotated)

The POR readily admits that the '362 patent and Zhang both digitize an input signal with desired and undesired channels, use similar complex mixers to extract the desired channels, and achieve the same result by outputting just desired channels. POR, 2, 4-5; Ex. 1078, ¶ 7.[2] Even if the claims required the particular circuitry

[2] Dr. Russ further acknowledged that the '362 patent's serial interface is "commonly known," and that the serial interface described in Ex. 1016 (which the Petition showed by comparison is the same as Zhang's selector 240/500) likewise is a "common structure." Pet., 31, 33, 37-40; Ex. 1079, 30:19-33:11; Ex. 1078, ¶ 7-8.

disclosed in the ’362 patent, Zhang would teach it. This should be a moot point, however, because it would be improper to limit the claims to that circuitry, given the breadth of the claim language. *Info-Hold, Inc. v. Applied Media Techs. Corp.*, 783 F.3d 1262, 1266-1267 (Fed. Cir. 2015) (rejecting contention that it is proper to limit the claims to the single disclosed embodiment absent a clear expression of intent to limit the claims' scope).

In short, Zhang’s relied-upon digital circuitry (230 in combination with all or part of 240) performs element [1D]’s broadly recited “select” and “output” functions. Zhang’s demultiplexer 230 receives a digitized RF input signal with a plurality of frequencies that include desired channels, and extracts and outputs those desired channels from Selector 240 as D_1-D_m to a demodulator as a digital data stream. POR, 1-2, 32. Zhang’s digital circuitry could not have output channels D_1-D_m *but for* by “*select[ing them] … from said digitized plurality of freque*ncies” as there is no other source for them.[3] Ex. 1078, ¶ 9. PO’s arguments about *how* Zhang

[3] PO concedes that channels C_1-C_n are “from the digitized plurality of frequencies” output by the ADCs. POR, 1-2. Each channel D1-Dm is the same as one of the channels C_1-C_n. Merely because the channels are labeled with a “D” at the output of 240 and a “C” at the input of 240 does not make them different. Each is “from the plurality of frequencies.” Ex. 1079, 39:3-8, 68:10-69:11; Ex. 1078, ¶ 9.

performs the selecting—by first extracting channels C_1-C_n and outputting a subset of them as channels D_1-D_m—is immaterial because element [1D] simply does not exclude such selection.

C. Zhang Teaches the Claims Even If the Claims Require Selection Directly from the Digitized Plurality of Frequencies

PO argues claim differentiation to attempt to show that element [1D] requires selecting the plurality of desired television channels *directly* from the plurality of frequencies and thus somehow excludes Zhang's channels D_1-D_m. But, as noted above, this argument fails because the relied-upon digital circuitry in Zhang includes demultiplexer 230, and therefore this digital circuitry *does* act directly on the plurality of frequencies output by the ADCs. Thus, the claims are unpatentable even under PO's claim construction. Moreover, PO's claim differentiation argument is unpersuasive because it compares significantly different claims from different patents.

PO compares element [1D] of the '362 patent to element [1B] of the '866 patent. POR, 33-35. The three cases cited in the POR make clear that the doctrine does not apply to PO's comparison. The first two cases compared nearly identical claims within the same patent. *SightSound Techs., LLC v. Apple Inc.*, 809 F.3d 1307, 1318 (Fed. Cir. 2015); *Curtiss-Wright Flow Control Corp. v. Velan, Inc.*, 438 F.3d 1374, 1380 (Fed. Cir. 2006) (claim differentiation refers to the "presumption that each claim in a patent has a different scope"). The third case, *Clare,* acknowledged

that the doctrine might indicate a difference between nearly identical limitations in two related patents, but ultimately rejected it because it would have resulted in the claims of one of the patents excluding the preferred embodiment in the specification. *Clare v. Chrysler Group LLC,* 819 F.3d 1323, 1330-1331 (Fed. Cir. 2016). Here, the POR compares significantly different language and features between the '362 and '866 patents. These claims have different scopes without requiring PO's inference that claim 1 of the '362 patent requires the selection of desired channels to be directly from the digitized input signal. POR, 34.

For all of these reasons, the Petition's second reading of Zhang renders the claim 1 unpatentable.

IV. ZHANG'S C_1-C_n ARE SELECTED DESIRED TELEVISION CHANNELS UNDER EITHER THE CORRECT CONSTRUCTION OR THE INCORRECT CONSTRUCTION TACITLY ARGUED BY PO

The Petition alternately explains that Zhang's demultiplexer 230/300 discloses element [1D]'s "*digital circuitry configured to: select said plurality of desired television channels from said digitized plurality of frequencies*." Pet., 28-36. PO disputes this, alleging that Zhang's channels C_1-C_n (the output of demultiplexer 230) must include both desired and undesired channels. POR, 3-6, 10.

As explained below, this argument fails for two reasons. *First*, Zhang does not require C_1-C_n to include undesired channels. Thus, even if PO were reading the claims correctly, those claims are still unpatentable in view of Zhang. *Second*, PO's

implicit construction of "select said plurality of desired television channels" is wrong—nothing in the claims exclude the additional selection of undesired channels. Thus, whether or not C_1-C_n includes some undesired channels is irrelevant. These two issues are discussed separately, below.

A. Zhang Discloses that Channels C_1-C_n are "desired channels" even under PO's Construction

1. Zhang Expressly Identifies C_1-C_n as "desired channels" and that the Number of Them May Be Less Than the Number of Channels Received

The Petition, supported by the declaration of Mr. Lett and his deposition testimony, explained how Zhang's demultiplexer 230 receives a digitized version of the multi-channel RF signal from ADC 220 and selects from this signal a number "n" of desired channels C_1 - C_n (**green**), each at a unique "target" RF channel. Pet., 8-10, 29-31; Ex. 1002, ¶¶ 78-80, 113-118; Ex. 1013, [0028], [0030]-[0032], [0042], claims 1, 2, 10-11, 13, 17, 21, 23, 27-28, 30, 33-34, 36, 41, Figs. 2-3.

Any dispute as to whether channels C_1-C_n are desired channels should be resolved by the fact that Zhang refers to each target RF channel that becomes one of the C_1-C_n channels as either a "desired RF channel" or "desired channel," and refers to other channels filtered out by the demultiplexer as "undesired." Ex. 1013, [0032], claim 34, 36, 37; Pet., 26; Ex. 1002, ¶¶ 105-106; Ex. 1078, ¶ 10. Zhang further states that "C_1-C_n contain content channels that are selected or used by a subscriber," and that each of C_1-C_n is output for demodulation via D_1-D_m (though as Mr. Lett explains,

not at the same time when m<n).[4] Pet., 29, 31; Ex. 1013, [0028]-[0029], [0038]-[0039], claims 3; Ex. 1002, ¶¶ 113-114, 119; Ex. 1078, ¶¶ 11-12. It defies common sense for a POSITA to read Zhang's reference to C_1-C_n as "desired channels," and believe that they must include undesired channels as PO argues. Ex. 1078, ¶ 11.

The Petition also cites Zhang's claims as supporting the teaching that C_1-C_n disclose the claimed selecting of desired channels. Pet., 27, 29 (citing Zhang's claims 1, 2, 10-11, 13, 17, 21, 23, 27-28, 30, 33-34, 36, 41); Ex. 1002, ¶¶ 108-109, 113. For example, claim 17 recites "<u>one or more</u> low-pass filters (LPF) configured to receive the multi-channel <u>digital RF signal</u>," and claim 21 recites that "<u>at least one</u> complex multiplier configured to receive a <u>multi-channel</u> digital RF signal." In each of these examples, the number of channels demultiplexed from a <u>multi-channel</u> digital RF signal can be as few as a single channel (e.g., demultiplexed by "one complex multiplier" and "one [] low pass filter[]"). Ex. 1078, ¶ 13. Claim 34 is another example that refers to a "plurality of select frequencies" used to demultiplex separate RF channels (e.g., C_1-C_n) from "at least one multi-channel RF signal." Nothing in this claim requires the number of channels in the at least one multi-

[4] When m=n, C_1-C_n and D_1-D_m are the exact same and all of C_1-C_n can be output simultaneously as D_1-D_m. PO concedes that channels "D_1-D_m" are desired channels. POR, 2; Ex 1079, 68:21-69:9.

channel RF signal and the separate RF channels to be the same (i.e., the claims do not require C_1-C_n to include all channels, desired and undesired from the multi-channel RF signal). Zhang's claims instead teach a number of channels in the multi-channel RF signal that is independent from the number of demultiplexer channels C_1-C_n. *Id*. These claims show that C_1-C_n can include less than all channels and thus exclude undesired channels. *Id*.

As Mr. Lett opined during his deposition, Zhang's architecture is flexible, where "n" is a variable that can be equal to *or less than* all channels in the signal band, and the exact number will depend on the specific application. Ex. 2018, 78:2-22, 79:17-80:10, 81:1-20, 83:10-14, 84:11-85:13, 85:24-86:12, 89:5-9; Ex. 1078, ¶ 14. Mr. Lett explained that in the demultiplexer in Figure 3 of Zhang, the purpose of the numeric controlled oscillators 310 is to tune the channel selection to different frequencies so that for a particular application, the user can decide which channels in the frequency band are desired. Ex. 2018, 86:1-12; Had Zhang demultiplexed all channels, programmable frequencies would not have been needed because those frequencies would have been static values, one for every channel in the band. Ex. 1078, ¶ 15.

All of the above makes clear that Zhang discloses that channels C_1-C_n include only desired channels and exclude undesired channels. As discussed below, PO's arguments to the contrary are unconvincing.

2. Contrary to the POR Assertions, Petitioner's Expert Repeatably Explains that "n" is a Variable Less Than or Equal To the Number of Channels in the Plurality of Frequencies.

Attempting to show that Mr. Lett agrees with PO, the POR cites a single response in his deposition testimony in which he agreed that paragraph 27 of Zhang says "n" channels refers to both desired and undesired channels in the entire signal band from the ADC. POR, 11 (citing Ex. 2018, 78:14-22). The POR leaves out (as noted above) that Mr. Lett goes on to opine (before and after the portion of his deposition testimony cited in the POR) that Zhang discloses that "n" is a variable that can be equal to *or less than* all channels in the signal band. Ex. 2018, 78:2-13, 79:17-80:10, 81:1-20, 83:10-14, 84:11-85:13, 85:24-86:12, 89:5-9; Ex. 1078, ¶ 16.

For example, Mr. Lett clarified that paragraph 42 of Zhang (referring to Figure 6) explains "in a different way [from paragraph 28]" that "n" can be any value up to the total number of channels in the signal band. Ex. 2018, 84:11-86:1; Ex. 1013, [0041]-[0042]; Ex. 1078, ¶ 17.

PO also cites Mr. Lett's declaration as allegedly supporting that C_1-C_n include all channels. POR, 14 (citing Ex. 1002, ¶ 79). The paragraph PO cites is a general background overview of Zhang describing one embodiment. Ex. 1078, ¶ 18. In his more detailed analysis of Zhang, Mr. Lett explains that n can be less than all channels that are in the multi-channel input, which Mr. Lett reiterated during his deposition. Ex. 1002, ¶¶ 104-106; Ex. 2018, 87:24-91:4; Ex. 1078, ¶ 18.

3. PO's Expert Did Not Consider Zhang's Express Disclosures Where "n" Is Less Than All Channels in the Plurality of Frequencies, and Remains Willfully Blind to Them

As discussed above, Zhang's claim 21 is an example where the number of desired channels demultiplexed (e.g., C_1-C_n) may be less than the number of channels in the RF multi-channel input signal. When asked about Zhang's claim 21, PO's expert first acknowledged that the elements of claim 21 correspond to the elements of demultiplexer 300 in Figure 3 of Zhang, but then he hedged, indicating: "I haven't looked at Claim 21 in detail," and "it's not something I'm basing an opinion on, and it's not something I'm prepared to issue an opinion on at the moment." Ex. 1079, 49:3-51:3. If Dr. Russ was correct with his initial response, confirming that Zhang's Figure 3 demultiplexer corresponds to claim 21, he thus confirmed that the demultiplexer can select fewer than all channels. If Dr. Russ was correct with his second response that he had not considered (and would not consider) claim 21, it becomes clear his testimony is based on an incomplete analysis of Zhang and thus should be accorded little to no weight. 37 C.F.R. § 42.65(a); Fed. R. Evid. 702(b); *Upjohn Co. v. Mova Pharm. Corp.*, 225 F.3d 1306, 1311 (Fed. Cir. 2000) ("Lack of factual support for expert opinion … may render the testimony of little probative value")

4. The Presence of Selector 240 Does Not Require that C_1-C_n Include All Channels, Desired and Undesired

Dr. Russ also opines that Zhang's channel selector 240, which selects and outputs channels D_1-D_m, is only needed because C_1-C_n necessarily includes all channels. POR, 6-7, 18, 21. This is incorrect.

PO notes that paragraph 28 of Zhang states that selector 240 provides fast channel search capabilities. POR, 6-7 (citing Ex. 2019, 8:4-8, 14-22; Ex. 1013, [0028]), 25-26. However, this does not mean that C_1-C_n necessarily includes all channels. Ex. 1078, ¶¶ 19-20. Referring to paragraph 28 of Zhang, PO's expert, Dr. Russ, states:

> This passage explains the actual purpose of the two-step process disclosed in Zhang – because the Digital Channel Demultiplexer 230 outputs all channels, the Selector 240 is able to rapidly switch between them. The system does not need to wait on the NLOs [*sic* NCOs] to settle to new frequencies when a channel is changed.

Ex. 2009, ¶ 60. The same benefits Dr. Russ identifies for selector 240—rapid switching and not waiting on the NCOs 310 in the demultiplexer 230 to settle to new frequencies—apply equally where C_1-C_n includes less than all of the channels in the input, but more channels than the demodulator is capable of decoding at one time. Ex. 1078, ¶ 21. By extracting the channels C_1-C_n the user desires to watch at different times (each a desired channel, but collectively less than all channels), the

user is able to quickly switch between these desired channels using selector 240. *Id.*, ¶¶ 22-23.

In short, the presence of selector 240 in Zhang does not mean that Zhang requires C_1-C_n to include undesired channels, particularly since Zhang refers to these channels as "desired channels" and describes them as including less than all channels. Ex. 1013, [0028], [0030], [0032]-[0033], [0042], claims 34, 36-37, 17, 21.

5. The Prosecution History of Zhang's European Patent Does Not Require that C_1-C_n in Zhang Include All Channels

PO and Dr. Russ cite the prosecution history in Zhang's related EPO application (POR, 15-16) but do not provide the related EPO patent application or the prior art that was allegedly being distinguished. Thus, Dr. Russ's opinion on this point is without support and should be accorded no weight. 37 C.F.R. § 42.65; Fed. R. Evid. 702(b); *Upjohn Co.,* 225 F.3d at 1311. Moreover, the discussion in the EPO application is irrelevant. It apparently relates to selector 240 and why selecting channels D_1-D_m was distinguishable over the cited art in Europe. Ex. 1078, ¶ 24. However, the operation of how selector 240 selects channels D_1-D_m says nothing about whether C_1-C_n in Zhang includes undesired channels. *Id.*

For all of these reasons, it is simply not true that C_1-C_n must include undesired channels. Accordingly, even if the claims included a negative limitation that the digital circuitry does not select any undesired channels, as PO suggests, the claims

are still unpatentable.

B. PO Misconstrues "select said plurality of desired television channels" to also Require Not Selecting Any Undesired Channels

As explained above, Zhang discloses selecting desired television channels C_1-C_n without selecting undesired channels. Moreover, PO's assertion that element [1D] requires this is wrong. PO alleges that extracting all channels from the digitized plurality of frequencies (or extracting even one undesired channel and hundreds of desired channels) is excluded from the claims because the '362 patent allegedly "*only* selects desired channels from the digitized input RF signal *without selecting any undesired channels*." POR, 3. But element [1D] places no requirement on how the system treats undesired channels, and PO's argument that "not selecting undesired channels" should be written into the claims is incorrect. Ex. 1078, ¶ 25.

To begin, the claim language itself does not support PO. The claims use the open-ended transition "comprising," and thus should not be interpreted as excluding additional, unrecited steps, such as selecting undesired channels. *Vivid Techs., Inc. v. Am. Sci. & Eng'g, Inc.*, 200 F.3d 795, 811 (Fed. Cir. 1999) ("'comprising'[] is generally understood to signify that the claims do not exclude the presence in the accused apparatus or method of factors in addition to those explicitly recited.") Moreover, PO's other related patents make clear that PO knew how to insert explicit negative limitations into claims when desired. *See*, *e.g.*, POR, 34 (quoting a claim from a related patent that explicitly stated "without providing any of the plurality of

undesired channels"). No such limitations appear in the claims of the '362 patent.

The patent specification also does not support importing this negative limitation into the claims. In this respect, PO's expert misrepresents the '362 patent disclosure. Dr. Russ states that in Figure 2 of the '362 patent, there is a bank of N mixers, allegedly for selecting "N desired channels, without selecting any undesired channels." POR, 3-4; Ex. 2009, ¶ 32 (citing Ex. 1001, 5:28-37, 49-60). However, the '362 patent does not contain the "without selecting any undesired channels" language. While Dr. Russ describes one alleged embodiment, he conveniently skips over other embodiments described *in the same paragraph* in which N is "equal to the number of *all* available channels that exist in the licensed frequency spectrum" or "*all* receivable channels within a geographic area." Ex. 1001, 5:36-39 (emphasis added), Fig. 2. "All" channels include the undesired channels shown in Figure 2. *Id.*; Ex. 1078, ¶ 26. In short, the '362 patent specification explicitly discloses the selection of undesired and desired channels.

Moreover, when pressed on the range of values of N during his deposition, Dr. Russ claimed ignorance, stating: "I haven't formed an opinion on the range of capital N." Ex. 1079, 27:5-17. A POSITA could not have concluded (as Dr. Russ does) that "N" did not include undesired channels without considering the possible range of "N." And a POSITA definitely would not have come to that conclusion if they read the two sentences following the sentence cited by Dr. Russ, where N

includes "all" channels. Dr. Russ's testimony, by its omissions and his admitted failure to consider all of the '362 patent, lacks a factual foundation and should be given little or no weight. 37 C.F.R. § 42.65(a); Fed. R. Evid. 702(b); *Upjohn Co.,* 225 F.3d at 1311.

Excluding from the scope of the claims of the '362 patent the embodiments where N includes all channels undermines PO's entire argument. *Nobel Biocare Servs. AG v. Instradent U.S., Inc.*, 903 F.3d 1365, 1381 (Fed. Cir. 2018) ("[T]here is a strong presumption against a claim construction that excludes a disclosed embodiment."). Thus, without any support in the claims or the specification, PO's reading of "without selecting any undesired television channels" into the claims is improper.

The Board should instead apply the plain and ordinary meaning of "select said plurality of desired television channels …." *Superguide Corp. v. DirecTV Enterprises, Inc.*, 358 F.3d 870, 874-875 (Fed. Cir. 2004). Selection is simply extracting a channel from the plurality of frequencies in the digitized RF signal. This is exactly what each signal path shown in Figures 2 and 3 in the '362 system does. Ex. 1078, ¶ 27. Each path includes a mixer 250 and filter 260 that picks out one channel from the plurality of frequencies in the digitized RF signal and outputs that channel on its own output path 272. Ex. 1001, 5:48-64, 6:43-54; Ex. 1078, ¶¶ 27-28.

Thus, in the ’362 patent, a plurality of desired television channels are selected as required by element [1D] as long as two of the output paths include desired channels, irrespective of what the other paths include. Ex. 1001, 5:36-44, Fig. 2. Ex. 1078, ¶ 27. This plain and ordinary meaning of “select” is entirely consistent with the ’362 patent disclosure.

C. It is Undisputed that Zhang’s Channels C_1-C_n Are Selected Desired Channels under the Proper Claim Construction

PO’s entire argument with respect to channels C_1-C_n is based on its improper reading of a negative limitation regarding undesired channels into the claims. If the Board refuses to rewrite the claims to include this limitation, PO has effectively conceded that Zhang’s demultiplexer 230, which selects desired channels C_1-C_n, meet element [1D].

Zhang’s demultiplexer 230 receives a digitized wide-band signal having a plurality of frequencies on which channels C_1-C_n are modulated. Pet., 27-31; Ex. 1013, [0027]-[0028], [0030]-[0032], [0042], claim 8, Figs. 2-3. Ex. 1078, ¶ 29; Ex. 1079, 38:16-39:2. The demultiplexer 230 outputs only channels C_1-C_n, each at baseband and each isolated on its own path, thus enabling the demodulator to decode them. Ex. 1078, ¶ 29; Ex. 1079, 39:3-40:19. Even PO’s expert acknowledges this basic point, that each of channels C_1-C_n is picked out from the plurality of frequencies in the wideband signal. POR, 21-22; Ex. 2009, ¶¶ 53, 57; Ex. 1079, 39:3-11. Simply put, this is “select[ing]” under its plain and ordinary meaning of

the term, and is identical to how each path in the '362 patent works to select a channel. Ex. 1078, ¶ 29; Pet., 29-30.

V. PETITIONER'S ALTERNATIVE ARGUMENTS THAT C_1-C_n AND D_1-D_M EACH DISCLOSE THE CLAIMED "DESIRED TELEVISION CHANNELS" ARE ENTIRELY CONSISTENT

PO also alleges that Petitioner's alternative arguments that Zhang's C_1-C_n and D_1-D_m are the plurality of desired television channels are inconsistent. POR, 28-29. This is because the Petition, in arguing that D_1-D_m are desired channels, makes the point that Selector 240 performs the outputting from data bus 1, and C_1-C_n are not output from data bus 1. *Id.* The POR again reads more into the claim than what is required. When relying on C_1-C_n as the desired channels, the Petition states that C_1-C_n are output to the demodulator *via* the selector 240. Pet., 31. The claim language of element [1D] does not exclude outputting through selector 240. Ex. 1078, ¶¶ 30-31. Just as the '362 patent's N desired channels, selected by mixers 250 and filters 260, are output to a demodulator *via* a serial or parallel data interface, Zhang's channels C_1-C_n are output to the demodulator via serial or parallel buses in selector 240. Ex. 1001, 6:55-58, Fig. 2; Pet., 31; Ex. 1078, ¶ 31. Petitioner's two alternative grounds are entirely consistent and each renders the claims unpatentable.

VI. CONCLUSION

For the reasons set forth above and in the Petition, all claims of the '362 patent are unpatentable and should be canceled.

Respectfully submitted

Dated: April 17, 2025

By: /Frederic M. Meeker/

Frederic M. Meeker
Reg. No. 35,282
Banner & Witcoff, Ltd.
1100 13th Street, NW
Suite 1200
Washington, DC 20005
(202) 824-3000
fmeeker@bannerwitcoff.com

CERTIFICATION UNDER 37 C.F.R. § 42.24(d)

Under the provisions of 37 CFR § 42.24(d), the undersigned hereby certifies that the word count for the foregoing Petitioner's Reply totals 5436, which is less than the 5,600 allowed under 37 CFR § 42.24(c)(1), as counted by the Word Count feature of Microsoft Word. This total includes 5368 words as counted by the Word Count feature of Microsoft Word and 68 words used in annotations.

Pursuant to 37 C.F.R. § 42.24(a)(1), this count does not include the table of contents, the table of authorities, mandatory notices under § 42.8, the certificate of service, this certification of word count, the claims listing appendix, or appendix of exhibits.

Dated: April 17, 2025

By: /Frederic M. Meeker/

Frederic M. Meeker
Reg. No. 35,282
Banner & Witcoff, Ltd.
1100 13th Street, NW
Suite 1200
Washington, DC 20005
(202) 824-3000
fmeeker@bannerwitcoff.com

CERTIFICATE OF SERVICE

Pursuant to 37 C.F.R. § 42.105, I hereby certify that I caused a true and correct copy of this **PETITIONER'S REPLY TO PATENT OWNER'S RESPONSE UNDER 37 C.F.R. § 42.23** in connection with IPR2024-00432 to be served via e-mail on April 17, 2025, in its entirety on the following counsel of record for Patent Owner:

JASON.ENGEL.PTAB@KLGATES.COM
WEATHERWAX@LOWENSTEINWEATHERWAX.COM
ENTROPIC_IPRS@LOWENSTEINWEATHERWAX.COM
ERIK.HALVERSON@KLGATES.COM
KYLE.KANTAREK@KLGATES.COM
NOLAN.HUBBARD@KLGATES.COM
MATTHEW.BLAIR@KLGATES.COM

Dated: April 17, 2025 By: /Carlos Goldie/

Carlos Goldie