UNITED STATES PATENT AND TRADEMARK OFFICE

BEFORE THE PATENT TRIAL AND APPEAL BOARD

COMCAST CABLE COMMUNICATIONS, LLC,
Petitioner,

v.

ENTROPIC COMMUNICATIONS, LLC,
Patent Owner.

Case IPR2024-00438
Patent 11,399,206 B2

REPLY DECLARATION OF DAVID B. LETT
IN SUPPORT OF PETITIONER'S REPLY

TABLE OF CONTENTS

Page

1. INTRODUCTION 1
2. MATERIALS CONSIDERED 1
3. ZHANG DISCLOSES ELEMENT [1D]'S FUNCTIONAL LANGUAGE AS THE SELECTION OF D_1-D_M 2
4. ZHANG EXPRESSLY IDENTIFIES C_1-C_N AS "DESIRED RF CHANNELS" AND THE NUMBER OF THEM TO BE LESS THAN THE NUMBER OF CHANNELS RECEIVED IN THE DIGITIZED PLURALITY OF FREQUENCIES 5
5. I REPEATEDLY EXPLAINED THAT "N" IS A VARIABLE LESS THAN OR EQUAL TO THE NUMBER OF CHANNELS IN THE PLURALITY OF FREQUENCIES 7
6. DR. RUSS'S ASSERTION THAT ZHANG'S SELECTOR 240 IS ONLY NEEDED BECAUSE C_1-C_N INCLUDES ALL CHANNELS IS INCORRECT 9
7. THE PROSECUTION HISTORY OF ZHANG'S RELATED EPO APPLICATION DOES NOT APPEAR TO BE APPLICABLE. 10
8. CLAIMS 13, 38, AND 64 DO NOT EXCLUDE DOWN CONVERTING UNDESIRED CHANNELS 10
9. THE PATENT OWNER RESPONSE COMPARISON OF CLAIM 1 OF THE '206 PATENT TO CLAIM 1 OF THE '866 PATENT SUPPORTS PATENT OWNER'S POSITION 13
10. CONCLUSION 15

I, David B. Lett, declare that I have personal knowledge of the facts set forth in this declaration and, if called to testify as a witness, could and would do so competently.

1. INTRODUCTION

1. I have been retained as an expert witness on behalf of the Petitioner, Comcast Cable Communications, LLC, for the above-referenced *inter partes* review proceeding.

2. I have been asked to provide a reply declaration regarding certain matters pertaining to U.S. Patent No. 11,399,206 ("the '206 patent") (Ex. 1001) and the unpatentability grounds set forth in the Petition for this proceeding.

3. I am being compensated at my usual consulting rate or testimony rate. My compensation is in no way dependent upon my opinions or testimony or the outcome of this proceeding. I have no financial interest in the party or in the outcome of this proceeding.

2. MATERIALS CONSIDERED

4. In addition to those mentioned in my previous declaration, I have reviewed the following documents:

- Patent Owner's Response and its accompanying exhibits, including Dr. Russ's Declaration (Ex. 2009)

- All other documents referenced herein

3. Zhang Discloses Element [1D]'s Functional Language as the Selection of D_1-D_m

5. As my previous declaration describes, in Zhang, "the multi-channel digital RF signal is input to Demultiplexer 230 and all or a portion of Digital Selector 240 (collectively **purple**) [as detailed in Figure 5], which perform Element [1D] … Collectively, Digital Channel Demultiplexer 230 and Selector 240 output only user selected channels (either all or a subset of the user selected "C" channels) and filter out all other channels from the digitized multi-channel RF signal." Ex. 1002, ¶¶ 110-113.

6. As I show below, the '206 patent specification and Zhang use the same circuitry. Zhang's digital circuitry (in the red box) that selects and down coverts and provides D_1-D_m matches the '206 patent's Figure 2 digital circuitry that selects and down converts and provides outputs desired channels 272a-272n. *See e.g.,* Pet., 24-25, 31-32; Ex. 1013, ¶¶ [0030]-[0032], [0038]-[0039], [0042], [0048], claims 36-37; Ex. 1002, ¶¶ 109-114.

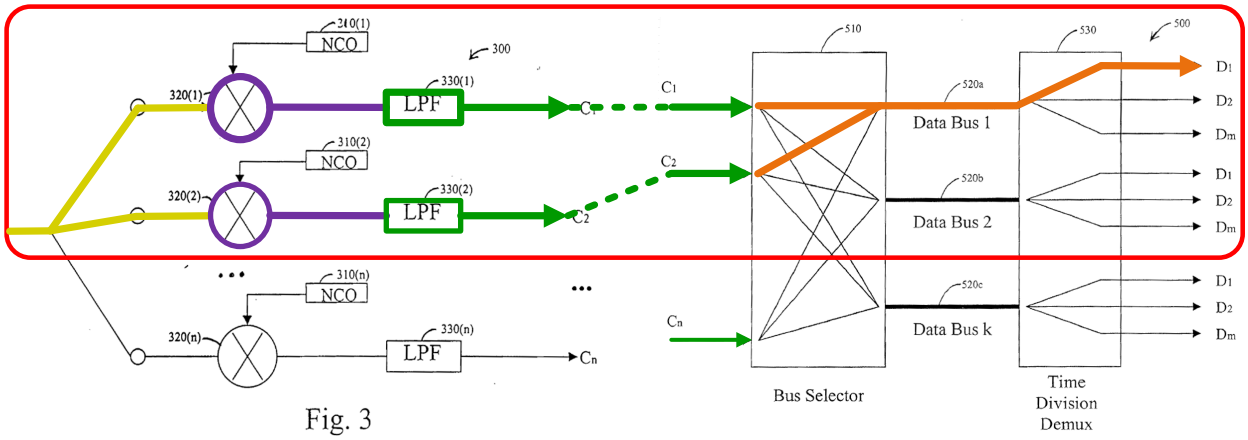

Fig. 3

Ex. 1013, Figs. 3, 5 (annotated)

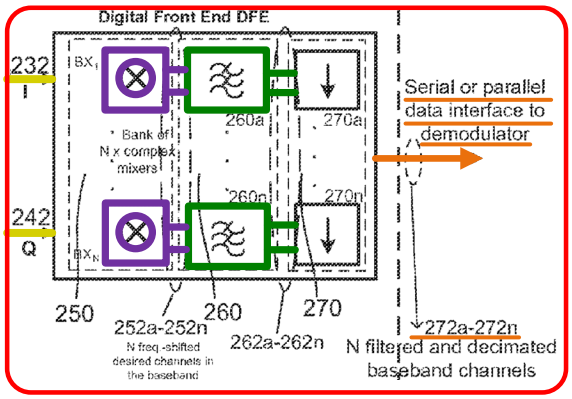

Ex. 1001, Fig. 2 (cropped and annotated)

7. I note that Dr. Russ admits that the ’206 patent and Zhang may ultimately achieve the same outcome (outputting desired channels), that “[s]imilar to the ’206 patent, Zhang digitizes an input signal (yellow), consisting of ’n’ desired and undesired channels, in the analog to digital converter 220 (yellow),” and that “Zhang’s Digital Channel DeMux 230 uses complex mixers similar to the ’206 patent to extract channels.” POR, 2, 4-5 (citing Ex. 2009 ¶¶ 31-35). Note that Dr. Russ’s cited paragraphs use yellow annotation for both the RF input 103 and the ADCs 218 and 228. The yellow annotation above is referring to the digitized output of the ADCs. I further showed in my previous declaration that the structure of the

’206 patent’s “commonly known,” serial interface (orange) is the same as that described in Ex. 1016 (“Rabaey,” as shown below), which by comparison is the same as Zhang’s selector 240/500 that outputs D_1-D_m. Ex. 1002, ¶¶117-120. The selecting of input signals (e.g., A and B) by this serial interface is the same selecting of channels C_1-C_n by Zhang’s bus selector 240 for outputting D_1-D_m. Ex. 1002, ¶¶ 117-120.

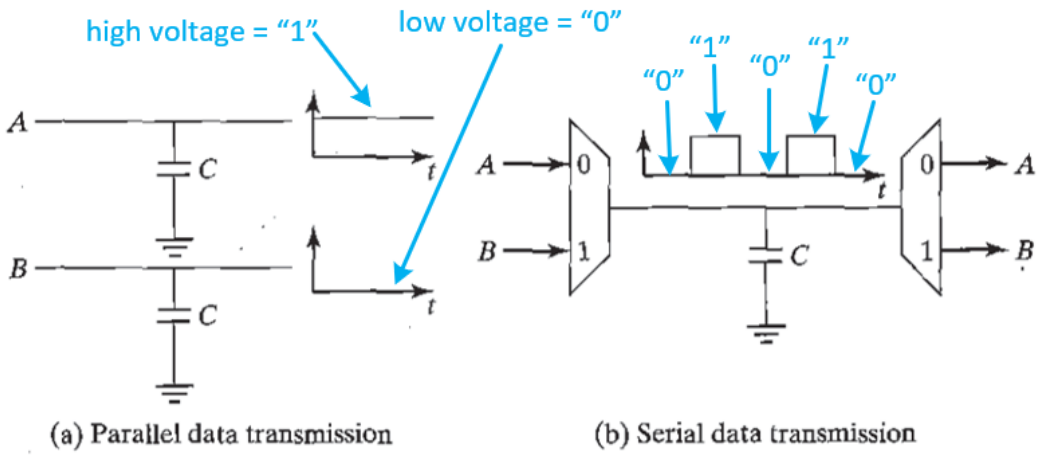

Figure 6-25 Parallel versus time-multiplexed data busses.

Pet., 38 (annotated Figure 6-25 of Ex. 1016, p. 80)

8. It is my view that, end-to-end, just as the ’206 patent’s desired channels 272a-272n output by the serial interface are the same as those selected from the plurality of frequencies by its complex mixers, Zhang’s channels D_1-D_m are selected from the “input signal [from a cable network]” (element [1D]) and “generate[d]” from “down converting each desired channel” (element [13D]). Merely because Zhang’s desired channels are labeled with a “D” at the output of 240 and a “C” at the input of 240 does not make them somehow different.

9. Dr. Russ concedes that Zhang receives a digitized RF input signal with a plurality of frequencies that include desired channels, extracts the desired channels using demultiplexer 230, and outputs those desired channels from Selector 240 as D_1-D_m to a demodulator as a digital data stream. Ex. 2009, ¶¶ 35, 76; POR, 1-3. A POSITA would have understood that Zhang's digital circuitry could not have output channels D_1-D_m *in any other way than* by "select[ing them] … from said digitized plurality of frequencies" simply because as there is no other source for them.

4. Zhang expressly identifies C_1-C_n as "desired RF channels" and the number of them to be less than the number of channels received in the digitized plurality of frequencies

10. Zhang expressly refers to C_1-C_n as "desired RF channels" and repeatedly states that the exact number "n" of selected channels will depend on the specific application. Ex. 1013, ¶¶ [0028], [0030], [0032]-[0033], [0042].

11. Zhang further states that "C_1 to C_n contain content channels that are selected or used by a subscriber," and that each of C_1-C_n is output for demodulation via D_1-D_m. Pet., 6, 25-26, 31-32; Ex. 1013, ¶¶ [0028]-[0029], [0038]-[0039], claim 3; Ex. 1002, ¶¶ 75-76, 111-113, 116-117, 132. In my view and that of a POSITA's, it would defy common sense for Zhang to refer to undesired channels as "desired channels" as Dr. Russ argues. Ex. 2009, ¶¶ 31, 35-36

12. Zhang places no restrictions on "n" and "m," as I explained in my declaration, D_1-D_m can include all or some of C_1-C_n, and the user may output some

or all n channels to the demodulator. Ex. 1002, ¶¶ 112-113, 119; Ex. 1013, ¶¶ [0028]-[0029], [0038]-[0039]. So, for example, if the number of "C" channels is 8 (n=8) and the number of "D" outputs is 4 (m=4), then there are more C channels than there are D outputs, only four of channels C_1-C_8 can be output simultaneously. But all of the C channels are still output.

13. I also note that Zhang's claims support the teaching that C_1-C_n disclose the claimed selecting and demultiplexing of desired channels. Ex. 1002, ¶¶ 106-107, 111-113, 126-127, 132-133. For example, claim 21 recites that "<u>at least one</u> complex multiplier configured to receive a <u>multi-channel</u> digital RF signal." Ex. 1013, claim 21 (emphasis added). In each of these examples, the number of channels demultiplexed from a <u>multi-channel</u> digital RF signal can be as little as a single channel (e.g., demultiplexed by "one complex multiplier"). In my view, because this claim recites receiving a multi-channel signal (i.e., a signal with a plurality of channels), but can include a single complex multiplier or filter, a POSITA would have understood that the claim shows that C_1-C_n can include less than all channels, and thus exclude undesired channels. Claim 34 is another example that refers to a "plurality of select frequencies" used to demultiplex separate RF channels (e.g., C_1-C_n) from "at least one multi-channel RF signal." Ex. 1013, claim 34. Nothing in this claim requires the number of channels in the at least one multi-channel RF signal and the separate RF channels to be the same (i.e., the claims do not require C_1-C_n to

include all channels, desired and undesired from the multi-channel RF signal). Zhang's claims instead teach a number of channels in the multi-channel RF signal that is independent from the number of demultiplexer channels C_1-C_n. Ex. 1002, ¶¶ 106-107, 111-113, 126-127, 132-133. These claims show that C_1-C_n can include less than all channels and thus exclude undesired channels.

14. I also opined during my deposition that Zhang's architecture is flexible, where "n" is a variable that can be equal to or less than all channels in the signal band, and the exact number will depend on the specific application. Ex. 2018, 78:2-22, 79:17-80:10, 81:1-20, 83:10-14, 84:11-85:13, 85:24-86:12, 89:5-9.

15. As I explained, in the demultiplexer in Figure 3 of Zhang, the purpose of the numeric controlled oscillators 310 is to tune the channel selection to different frequencies so that for a particular application, the user can decide which channels in the frequency band are desired. Ex. 2018, 86:1-12. Had Zhang demultiplexed all channels, programmable frequencies would not have been needed because those frequencies would have been static values, one for every channel in the band.

5. I repeatedly explained that "n" is a variable less than or equal to the number of channels in the plurality of frequencies.

16. The Patent Owner Response cites a single response in my deposition testimony in which I agreed that paragraph 27 of Zhang says "n" channels refers to both desired and undesired channels in the entire signal band from the ADC. POR, 11 (citing Ex. 2018, 78:14-22). I was answering specifically about **just one**

embodiment disclosed by Zhang paragraph 27, "(In this specific embodiment, ADC **220** is a high-speed ADC so that an entire signal band with n channels **can be** converted.") *emphasis added*. The Patent Owner Response leaves out that I go on to opine (before and after the portion of my deposition testimony cited in the POR) that Zhang discloses that "n" is a variable that can be equal to or less than all the channels in the signal band. Ex. 2018, 78:2-13, 79:17-80:10, 81:1-20, 83:10-14, 84:11-85:13, 85:24-86:12, 89:5-9.

17. For example, I clarified that paragraph 42 of Zhang (referring to Figure 6) explains "in a different way [from paragraph 28]" that "n" can be any value up to the total number of channels in the signal band. Ex. 2018, 84:11-86:31, Ex. 1013, ¶¶ [0041]-[0042].

18. The Patent Owner Response also identifies my declaration as allegedly supporting that C_1-C_n include all channels. POR, 14 (citing Ex. 1002, ¶ 79), 45. The paragraph cited is a general background where I give an overview of Zhang based on one embodiment. I further explained in my detailed analysis of Zhang that n can be less than all channels that are in the multi-channel input. Ex. 1002, ¶¶ 104-106. I reiterated this during my deposition. Ex. 2018, 87:24-91:4.

6. Dr. Russ's assertion that Zhang's selector 240 is only needed because C_1-C_n includes all channels is incorrect

19. Dr. Russ provides the opinion that Zhang's channel selector 240, which selects and outputs channels D_1-D_m from C_1-C_n, is only needed because C_1-C_n includes all channels. Ex. 2009, ¶¶ 52, 57. I disagree with this opinion.

20. Dr. Russ correctly cites paragraph 28 of Zhang for stating that selector 240 provides fast channel search capabilities. Ex. 2009, ¶¶ 60-61. Dr. Russ's conclusion from these statements, however, does not logically follow.

21. The same benefit of fast switching that selector 240 provides (e.g., the user pressing channel up or channel down button, for example) applies equally where C_1-C_n includes all or less than all of the channels in the input, but more channels than the demodulator is capable of decoding at one time.

22. If a user was not authorized to watch a particular channel, there would be no reason to include it in channels C_1-C_n, and thus it would be an undesired channel. An example of such would be an optional channel (e.g., HBO) that the user did not subscribe to that cable providers at the time charged extra fees for a customer to view.

23. By extracting the channels C_1-C_n the user desires to watch at different times, the user is able to quickly switch between these desired channels using selector 240. *Id*. Just because the user is not capable of watching all desired channels C_1-C_n at the same time does not mean they are undesired. *Id*.

7. The prosecution history of Zhang's related EPO application does not appear to be applicable.

24. Dr. Russ further discusses the prosecution history in Zhang's related EPO application that allegedly supports that Zhang's C_1-C_n include all channels. Ex. 2009, ¶¶ 46-47. Dr. Russ quotes a communication from the EPO, apparently discussing the claims in that case in comparison to prior art references D_1 and D_2. The exhibits provided by the Patent Owner do not include the related EPO patent application or its claims or the prior art that was allegedly being distinguished in that case. Therefore, I cannot determine whether a POSITA would concur with the EPO opinion. Nevertheless, the discussion in the EPO application references a "selector," and to the extent this refers to selector 240, the discussion would appear to be how selector 240 selecting channels D_1-D_m is distinguishable over the cited art (presuming the EPO and the '206 patent have the same disclosure.) In my view, this is irrelevant since the operation of selector 240 does not affect or provide any indication about what channels are included in C_1-C_n. *Id.*

8. Claims 13, 38, and 64 do not exclude down converting undesired channels

25. The Patent Owner Response also alleges that Element [13D] excludes "down converting" all channels in the '206 patent allegedly because "[i]n all embodiments of the '206 patent, the "plurality of digital channel outputs" is generated by downconverting each of the desired channels, not by downconverting

all channels." POR, 3, 45-47. I believe this is wrong for a few reasons, including that element [13D] does not include any limitations about undesired channels.

26. Dr. Russ misrepresents the '206 patent disclosure. Dr. Russ, explains that in Figure 2 of the '206 patent, there is a bank of N mixers for selecting "N desired channels, without selecting any undesired channels." POR, 3-4; Ex. 2009, ¶ 32 (citing Ex. 1001, 5:48-55, 5:63-6:6). While Dr. Russ describes one embodiment, he skips over the other embodiments described in the same paragraph in which N is "equal to the number of *all* available channels that exist in the licensed frequency spectrum" or "*all* receivable channels within a geographic area." Ex. 1001, 5:36-39, 5:55-61 (emphasis added), Fig. 2. "[A]ll channels" include the undesired channels shown in Figure 2. *Id*. Thus, just like Zhang as described above, the '206 patent also discloses that the number of output channels can be less than or equal to the number of channels in the input frequency spectrum.

27. A POSITA would have understood that plain and ordinary meaning of "select said plurality of desired channels . . ." is what each signal path shown in Figures 2 and 3 in the '206 system does. Each path includes a mixer 250 and filter 260 that picks out one channel from the plurality of frequencies in the digitized RF signal by frequency shifting it down to baseband and filtering it to output that channel on its own output path 272. Ex. 1001, 6:3-15, 6:64-7:9. In the '206 patent, a plurality of desired television channels is down converted as required by element

[13D] as long as two of the paths 272 include desired channels, irrespective of what the other paths include. Ex. 1001, 5:36-39, Fig. 2. This plain and ordinary meaning of "down converting each desired channel" is entirely consistent with the '206 patent disclosure. *Id.*

28. Patent Owner's argument seems to be that if what goes into Zhang's demultiplexer 230 is the same as what comes out, then nothing was selected. However, what goes into Zhang's demultiplexer is a digitized wide-band signal having a plurality of frequencies including those on which channels C_1-C_n are modulated. Pet., 28-31; Ex. 1013, ¶ [0032]. What comes out of the demultiplexer is <u>only</u> channels C_1-C_n, each at baseband and each isolated on its own path, thus enabling the demodulator to decode them. The "entire band" of frequencies that is present at the input is not present at the demultiplexer outputs. Ex. 1013, ¶ [0032].

29. Properly understood, Zhang's demultiplexer 230, which down converts desired channels C_1-C_n, meets element [13D]. Zhang's demultiplexer 230 receives a digitized wide-band signal having a plurality of frequencies on which channels C_1-C_n are modulated. Pet., 20-23; Ex. 1013, ¶¶ [0027]-[0028], [0030]-[0032], [0042], claim 8, Figs. 2-3. The demultiplexer 230 outputs only channels C_1-C_n, each at baseband and each isolated on its own path, thus enabling the demodulator to decode them. The Patent Owner acknowledges this basic point, that each of channels C_1-C_n is picked out from the plurality of frequencies in the wideband signal. POR, 17-18;

Ex. 2009, ¶¶ 52-54, 58. Selector 240 further outputs some or all of C_1-C_n as digital channel outputs D_1-D_m from a serial interface. POR, 32. This is "digitally down converting … to generate a plurality of digital channel outputs " under its plain and ordinary meaning, and is identical to how each path in the '866 patent works to down convert and generate a digital channel output. Pet., 29-30.

9. The Patent Owner Response Comparison of claim 1 of the '206 patent to claim 1 of the '866 patent supports Patent Owner's position

30. The Patent Owner Response compares claim 1 of the '206 patent to claim 1 of the '866 patent in an attempt to show that "selecting … from the input signal" would exclude Zhang's channels D_1-D_m from being the claimed desired channels in element [1D]. POR, 34-36. The Patent Owner Response's reasoning seems to be that because element [1C] of the '866 patent recites "selecting" like element [1D] of the '206 patent, but does not recite "from the input signal," that this additional limitation in [1D] of the '206 patent requires something distinct. I disagree.

31. A POSITA would not understand claim 1 in the '206 patent as requiring the desired channels to be *directly* selected from the "input signal [from a cable network]," because there is no example of this in the '206 patent disclosure. Adding "*directly*" would arguably require the "selecting" to occur before the ADC altogether, thus excluding every embodiment of the '206 patent. There is only one manner of selecting desired channels from the input signal from a cable network

disclosed in the ’866 and ’206 patents (e.g., illustrated in Figure 2), which is to do so in a number of steps. The language “from the input signal” in claim 1 of the ’206 patent would be understood by a POSITA as including “directly or indirectly from the input signal.” It does not require just “directly” as the Patent Owner argues. Ex. 2009, ¶¶ 32-33.

[SIGNATURE PAGE FOLLOWS]

10.CONCLUSION

32. All of the statements made in this declaration of my own knowledge are true. All statements made based on information and belief are believed to be true. I declare under penalty of perjury that the foregoing is true and correct.

Dated: 4/16/2025 By: David B. Lett

David B. Lett