United States Patent [19]

Corbett

[11] **4,299,519**

[45] **Nov. 10, 1981**

[54] **TWO PIECE FASTENER AND INSTALLATION TOOL**

[75] Inventor: **Robert J. Corbett**, Saugerties, N.Y.

[73] Assignee: **Huck Manufacturing Company**, Irvine, Calif.

[21] Appl. No.: **144,846**

[22] Filed: **Apr. 29, 1980**

Related U.S. Application Data

[63] Continuation of Ser. No. 2,582, Jan. 10, 1979, abandoned.

[51] **Int. Cl.**[3] **F16B 19/05**; B21J 15/00

[52] **U.S. Cl.** **411/361**; 72/391

[58] **Field of Search** 72/391; 411/361, 355, 411/356, 38; 29/243.53, 243.54

[56] **References Cited**

U.S. PATENT DOCUMENTS

1,629,925	5/1927	Moore	411/355
2,167,558	7/1939	Upson	411/411
2,542,237	2/1951	Torresen	72/391
2,562,019	7/1951	Colley	411/38
2,972,274	2/1961	La Bombard	411/337
3,007,364	11/1961	Dickie	411/15
3,029,665	4/1962	Baugh	72/402
3,180,126	4/1965	Carlson	72/365
3,197,987	8/1965	Martin	72/114
3,241,421	3/1966	Siebol	411/361
3,266,364	8/1966	Becker	411/44
3,378,054	4/1968	Vaughn	411/106
3,645,125	2/1972	Summerlin	72/391
3,792,933	2/1974	Stencel	72/391
3,915,053	10/1975	Ruhl	411/361
4,010,630	3/1977	Davis	72/391

FOREIGN PATENT DOCUMENTS

657135	2/1963	Canada	411/361

Primary Examiner—Gene P. Crosby

Attorney, Agent, or Firm—Harness, Dickey & Pierce

[57] **ABSTRACT**

A two piece pull-type fastener is disclosed herein comprising a pin and collar adapted to be swaged into locking engagement with the pin upon setting of the fastener by application of a pulling force to the pin and reaction force on the collar. The pin is provided with a minimum number of pull grooves defined by alternating crests and valleys which grooves are sufficient in strength to allow an installation tool to exert a pulling force on the pin of a magnitude required to properly set the fastener. The installation tool has a gripping structure adapted to engage the pull grooves. The gripping structure and pull grooves are complementarily shaped so as to prevent engagement of less than all of the pull grooves by the gripping structure of the tool in order to prevent stripping of the pull grooves if less than all are attempted to be engaged. Thus an installation tool nose assembly is also disclosed which nose assembly is uniquely designed for use with the present fastener. In a preferred form of the invention, the pull grooves of the fastener are provided on a pintail portion of the fastener. In a different form of the invention the pull grooves are located within an opening in the end portion of the pin.

32 Claims, 6 Drawing Figures

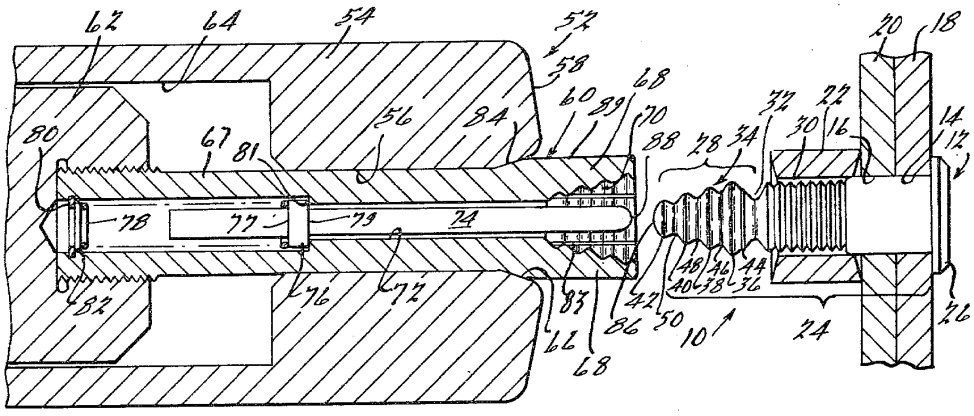

Meishan v. Howmet
IPR2026-00268
Ex. 1007-001

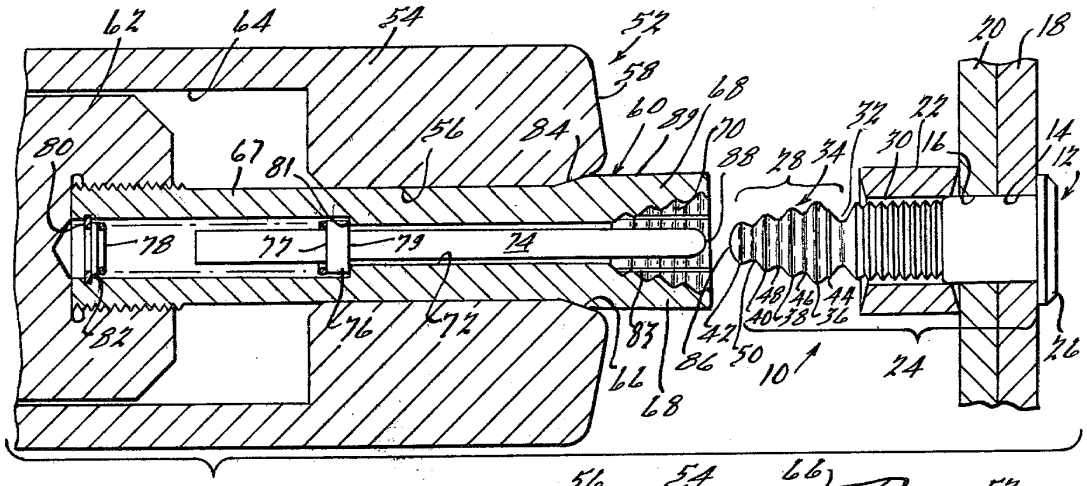

FIG. 1.

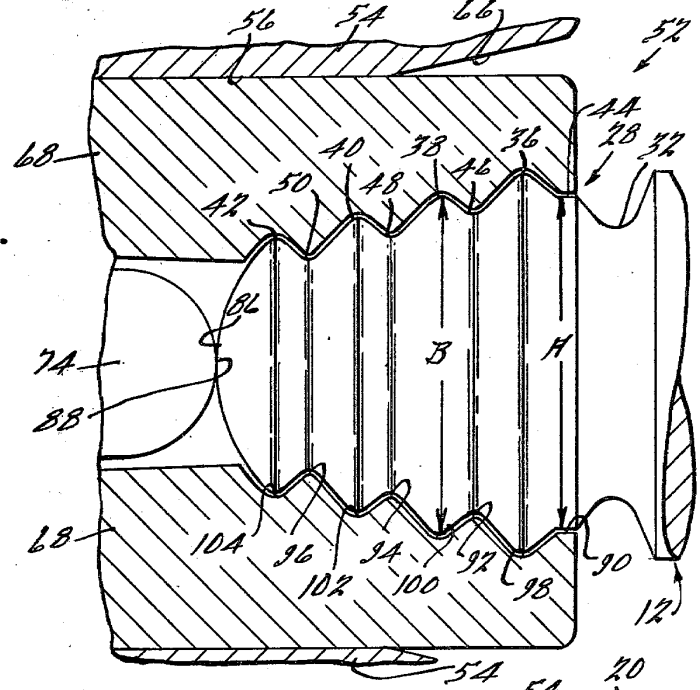

FIG. 4.

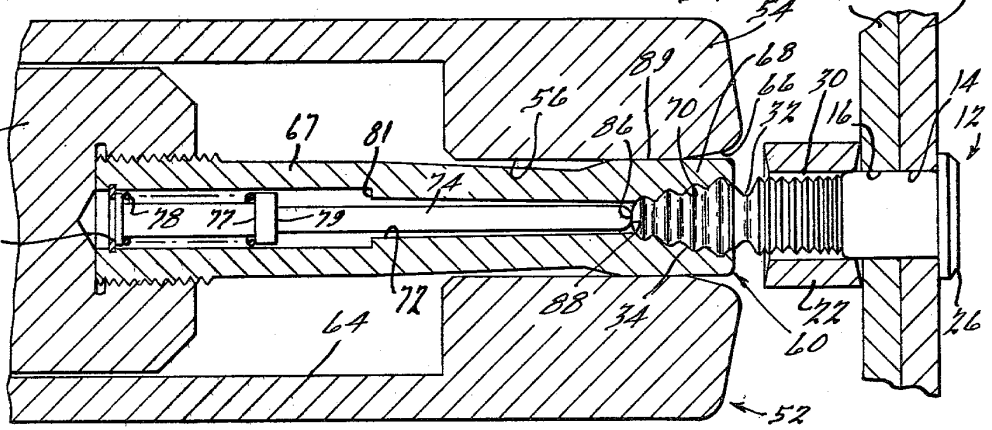

FIG. 2.

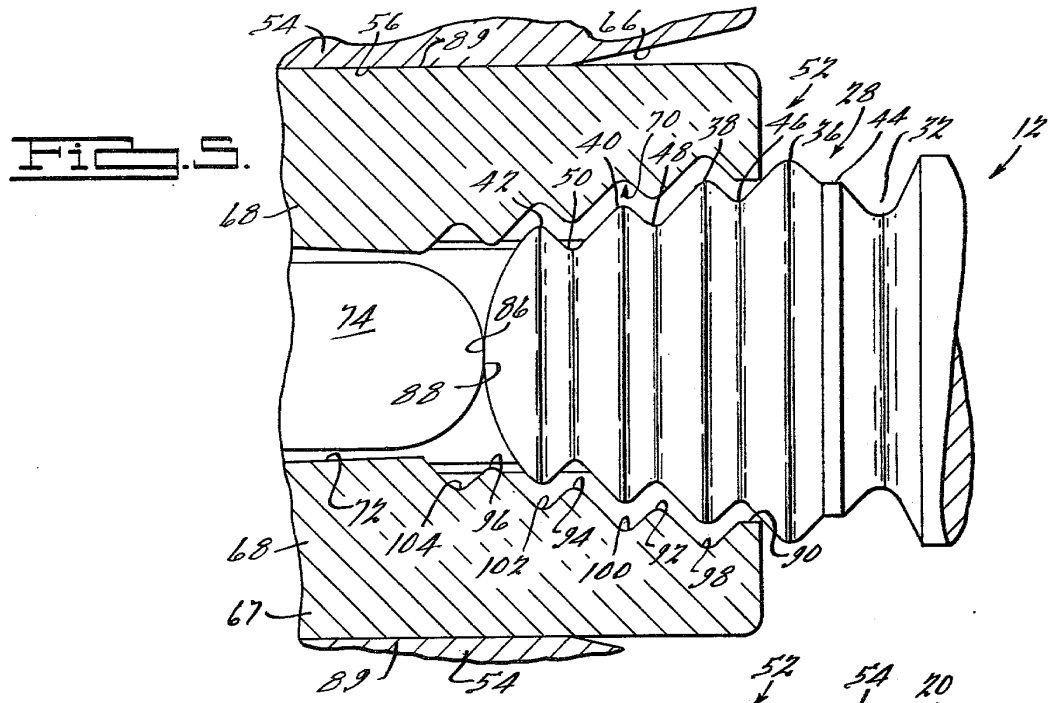

Fig. 5.

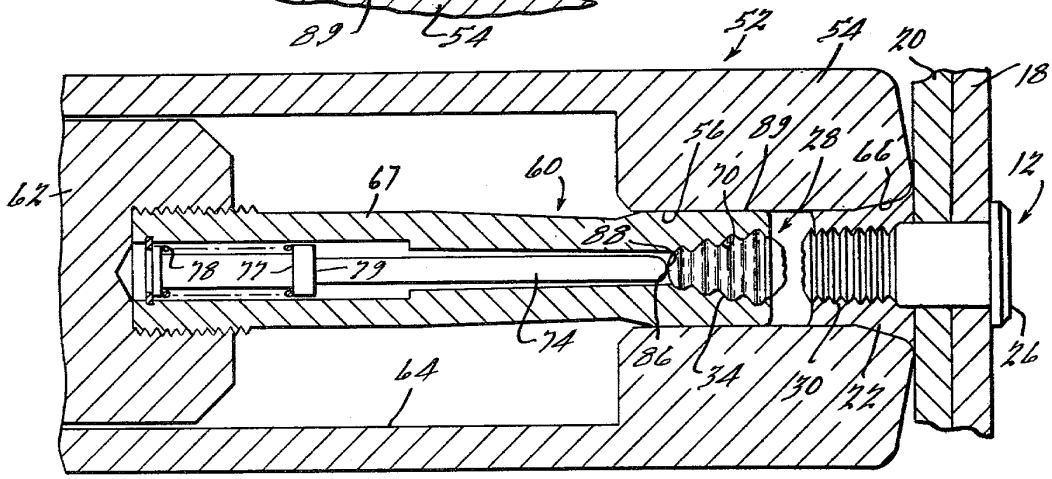

Fig. 3.

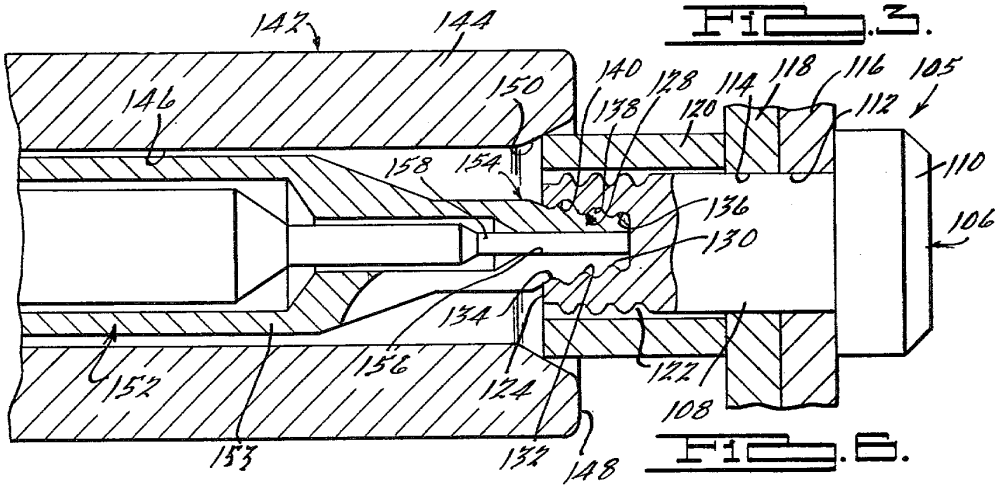

Fig. 6.

TWO PIECE FASTENER AND INSTALLATION TOOL

This is a continuation of application Ser. No. 2,582, filed Jan. 10, 1979, now abandoned.

BACKGROUND AND SUMMARY OF THE INVENTION

The present invention relates generally to multiple piece fasteners and more particularly to two piece fasteners of the type comprising a pin and swageable collar designed for installation by a pulling tool which exerts a pulling force on the pin and reaction force on the collar so as to swage the collar into engagement with the pin.

Conventional pull-type two piece fasteners include a pin and a collar adapted to be swaged thereon. The pin has an elongated shank provided with a head at one end, a plurality of lock grooves and a plurality of pull grooves defined by substantially uniform diameter crests alternating with valleys of substantially uniform diameter. These pull grooves are provided on a separable pintail portion of the shank. The collar is applied to the shank of the pin subsequent to insertion of the pin into a prepared opening in workpieces to be joined. An installation tool having a jaw assembly is applied to the pin with the jaws of the installation tool having a plurality of teeth adapted to engage a selected number of the pull grooves whereby a pulling force can be exerted on the pin. The installation tool also has a swaging anvil adapted to engage the collar and to swage the collar into engagement with locking grooves on the shank portion of the pin in reaction to the pulling force. As the pulling force continues to increase in magnitude the pintail portion of the shank is separated at a breakneck groove provided on the pin shank between the locking grooves and the pull grooves. The pintail portion is discarded and the setting operation is complete. This pintail portion, however, represents a cost factor in the fastener which contributes nothing to the fastened joint as it serves only to aid in the installation of the fastener.

Typically these pintail portions have been fabricated with a substantially greater number of pull grooves than that required to properly set the fastener. One of the reasons for this excess number of pull grooves and hence extra length of the pintail is to ensure that a sufficient number of pull grooves are engaged by the jaws of the installation tool to develop the pull force required to set the fastener. If an insufficient number of pull grooves are engaged by the jaws, the engaged pull grooves may be stripped before complete setting of the fastener thus requiring removal of the partially installed fastener and installation of a new fastener.

While present material costs attributable to this lengthy pintail when such pull-type fasteners are fabricated from low cost materials may not be significant enough to generate much concern, this is not necessarily the case when the fasteners are fabricated from more costly, exotic metals such as titanium which are commonly used in the aerospace industry. In the latter case, it is very desirable to reduce to an absolute minimum the amount of material required and hence the costs associated with the fastener and particularly to reduce the amount of that material and associated cost which does not contribute to the integrity or strength of the fastener as installed i.e. the disposable pintail. One problem, however, is to assure that the minimum number of grooves are engaged by the tool jaws to preclude stripping.

Accordingly, the present invention provides a fastener and associated installation tool jaw assembly by which the amount of disposable pintail material is minimized. In a preferred form of the invention, the pintail portion of the pin is reduced to a minimum length required to provide only that number of pull grooves necessary to provide sufficient strength to accept the setting force to be exerted thereon by the installation tool when all of the grooves are engaged. In a different form of the invention, the pintail portion is totally eliminated, the pull grooves being provided within an axially inwardly extending opening provided in the pin portion of the fastener. In both of these embodiments, the pull grooves are designed to cooperate with the jaws of the installation tool in such a manner as to preclude engagement of less than the minimum number of pull grooves required before any pulling force can be generated thereby eliminating the possibility of stripping of the grooves.

Thus, the present invention provides a pull-type fastener and associated installation tool jaw structure which enables the length of the pintail to be substantially reduced or even eliminated while still precluding the possibility of stripping the fastener. The reduced length or complete elimination of the pintail portion affords the advantage of cost savings which can be significant where costly materials are employed.

Additional advantages and features of the present invention will become apparent from the subsequent description and the appended claims taken in conjunction with the accompanying drawings.

BRIEF DESCRIPTION OF THE DRAWINGS

FIG. **1** is an elevational view of a fastener partially in section with the fastener assembled to workpieces to be joined and a portion of an installation tool ready for application thereto all in accordance with the present invention;

FIG. **2** is a view similar to FIG. **1** but showing the installation tool in initial engaging relationship with the fastener;

FIG. **3** is a view similar to that of FIG. **1** but showing the fastener in a set condition with the pintail portion separated therefrom;

FIG. **4** is an enlarged fragmentary view shown partially in section of the pintail portion of the fastener of FIGS. **1** through **3** with the installation tool jaws shown in engaging relationship therewith;

FIG. **5** is a view similar to FIG. **4** but showing an improper relationship between the installation tool jaws and the pintail portion; and

FIG. **6** is a view similar to that of FIG. **2** but illustrating a different form of the present invention.

DESCRIPTION OF THE PREFERRED EMBODIMENTS

Referring now to the drawings and specifically to FIGS. **1** through **3**, there is shown a pull-type two piece fastener in accordance with the present invention indicated generally at **10** and comprising a pin **12** installed within aligned openings **14** and **16** of workpieces **18** and **20** respectively and a swage collar **22** assembled thereto.

Pin **12** includes a shank portion **24** having a head **26** provided at one end thereof, a pintail portion **28** at the other end thereof and a plurality of locking grooves **30** disposed therebetween. A breakneck groove **32** is also

provided on shank portion **24** between locking grooves **30** and pintail portion **28**. It should be noted that head **26** of pin **12** may be of either a shear or tension type and further of either a protruding type as shown or of a countersunk type if desired. Also, locking grooves **30** may be of any suitable construction such as of the type illustrated and described in U.S. Pat. No. 3,915,053 issued Oct. 28, 1975 for example. Similarly, collar **22** may be of any suitable type desired.

Pintail portion **28** of pin **12** is of a generally conical shape and has a plurality of pull grooves **34** provided therealong, each of said pull grooves being defined by successively alternating crests **36** through **42** and valleys **44** through **50**. As shown, each of the successive crests **36** through **42** proceeding outwardly away from breakneck groove **32** has a diameter less than any of the preceding crests. Similarly, each of the valleys **44** through **50** has a diameter less than the diameter of any of the preceding valleys.

A portion of an installation tool assembly **52** is also shown in FIGS. **1** through **3** and comprises an anvil **54** having a bore **56** extending inwardly from end **58** thereof through which a collet assembly **60** extends, collet assembly **60** normally extending outwardly beyond end **58**. A collet assembly carrying member **62** is reciprocably disposed within an enlarged diameter bore **64** provided within anvil **54**, into which bore **56** opens. The outer end of bore **56** has an outwardly flared generally frusto conically shaped surface portion **66** provided thereon.

Collet assembly **60** comprises a tubular collet jaw structure **67** terminating in a longitudinally split or segmented jaw portion **68** having a plurality of radially inwardly extending teeth **70**; the jaw structure **67** has a longitudinally extending central bore **72** extending inwardly. The jaw portion **68** has three jaw segments normally resiliently located in an open position. Collet assembly **60** includes a spring loaded ejection pin or mandrel **74** which is movably disposed within bore **72** and which is urged outwardly between teeth **70** of jaw portion **68** by a spring **78**. Ejection pin **74** has a flange portion **76** provided on its inner end, one surface **77** of which provides a seat for one end of the biasing spring **78**, the opposite surface **79** of which engages an annular shoulder **81** provided within the jaw structure **67** so as to retain ejection pin **74** therein. The other end of spring **78** is seated on a retaining ring **80** seated within a groove **82** provided at the inner end of collet jaw structure **67**.

Jaw portion **68**, as previously mentioned, is comprised of a plurality of resilient fingers or sections which may be formed by providing a plurality of axially inwardly extending slits **83** which extend for only a portion of the length of collet jaw structure **67**. Alternatively the fingers could be provided by fabricating collet jaw structure **67** from a plurality of separately machined segments. In any event, the outer surface of collet jaw portion **68** is provided with an inclined or frusto conical surface portion **84** which is engageable with surface **66** of anvil assembly **54**. The actuation mechanism portion of installation tool **52** may be of any suitable conventional construction such as the type illustrated in U.s. Pat. No. 3,329,000, the disclosure of which is hereby incorporated by reference. As will be seen the tool **52** can be actuated by an operator to a pulling stroke during which the fastener **10** is set and then deactuated whereby the tool **52** will be activated to a return stroke.

As seen in FIG. **2**, when installation tool **52** is applied to fastener **10**, the terminal end surface **86** of pintail portion **28** will engage rounded end portion **88** of ejection pin **74** thereby moving ejection pin **74** longitudinally into bore **72** and compressing spring **78**. Thereafter, the tool **52** is actuated to its pulling stroke causing collet carrying member **62** to move longitudinally relative to the anvil assembly **54**. As jaw portion **68** moves longitudinally or axially inwardly with respect to anvil **54**, the engagement of surface **66** with inclined surface **84** causes the separate fingers of collet jaw portion **68** to move radially inwardly and the teeth **70** to move into engaging relationship with pull grooves **34** of pintail portion **24**. When jaw portion **68** is in a fully closed position, outer surface **89** engages the sidewall of bore **56** along its length axially outwardly from inclined surface **84** holding the fingers of jaw portion **68** closed as a pulling force is exerted on pin **12**.

Thereafter, continued relative movement between the anvil **54** and collet carrying member **62** will cause surface **66** and a portion of bore **56** thereof to move into engagement with and swage collar **22** into engagement with locking grooves **30** of pin **12**. Thereafter, increased pulling force is applied to pintail portion **24** until breakneck groove **32** fractures thereby separating pintail portion **28** from the set fastener. It should be noted that bore **56** will be of a sufficient length to insure full engagement with surface **89** over the entire length of travel of collet assembly **60**. The installation tool **52** is then deactuated from its pulling stroke by the operator whereby the installation tool **52** is activated to its return stroke causing the collet assembly **60** to move axially outwardly relative to anvil assembly **54** to return tool **52** to its ready position as shown in FIG. **1**. At the same time on the return stroke the swaging anvil **54** is retracted from the swaged collar **22**. Jaw portions **68** will then move radially outward into an open position and separated pintail **28** will be ejected therefrom by outward movement of ejection pin **74**. Installation tool **52** is then ready for application to the next fastener to be set.

As previously mentioned and best seen with reference to FIGS. **4** and **5**, jaw teeth **70** are preferably contoured to complement crests **36** through **42** and alternating valleys **44** through **50** of pintail portion **28** and are defined by crests **90** through **96** and alternating valleys **98** through **104**. The diameter "A" of pintail portion **28**, as measured at valley **44**, is substantially equal to or slightly greater than diameter "B" of pintail portion **28** as measured at crest **38**. Similarly, the respective diameters of pintail portion **28** as measured at valleys **46** and **48** are approximately equal to or slightly greater than the diameters at crests **40** and **42**, respectively. Similarly, as jaw teeth **70** of collet assembly **60** preferably have a shape complementary to the shape of pintail portion **28**, the diameter of the opening defined by and measured at valley **100** will be less than or equal to the diameter of the opening defined by and measured at crest **90** thereof when jaw portions **68** are in a fully closed position. Similarly, the diameter of the respective openings defined by and measured at valleys **102** and **104** will be less than or approximately equal to the respective diameters of the openings defined by and measured at crests **92** and **94**, respectively. Accordingly, proper and full application of installation tool **52** to pintail portion **28** will result in full mutual engagement of jaw teeth **70** with pull grooves **34**. It is important to note that with this structure the diameter of jaw crest **90** in its closed position is greater than that of each

of the pintail crests **38**, **40**, and **42**. The same is true with jaw crest **92** relative to pintail crests **40** and **42** and with jaw crest **94** relative to pintail crest **42**. Thus the jaw crests **90**, **92**, **94** and **96** will engage pintail crests **36**, **38**, **40** and **42** only when both sets of crests are in proper alignment thereby assuring gripping of all of the pintail crests by all of the jaw crests or gripping of none. Thus, should for some reason the operator fail to fully or completely apply installation tool **52** to pintail portion **28** prior to actuation of the tool so that jaw portion **68** closes before pintail portion is properly axially positioned, the tool will cycle without stripping the pull grooves **34**. This situation can be seen in FIG. **5** where the results of improper alignment are shown. Thus, when jaw portion **68** is in a fully closed position, the opening defined by crest **90** will clear any of the axially outwardly disposed crests **38**, **40**, or **42** and the same is true with regard to jaw crest **92** as compared to pintail crests **40** and **42**, and with regard to jaw crest **94** as compared to pintail crest **42**. Thus, the present invention provides an effective disabling feature which allows the pintail length to be reduced to a minimum without concern as to stripping of the pull grooves should the tool be positioned thereon so as to provide less than full engagement of jaw teeth **70** with all of the pull grooves **34**.

While the present invention has been illustrated and described with reference to a pin having a pintail portion provided with four pull grooves **34**, the specific number is not critical. It is important, however, to provide a number of pull grooves, each having a shear area such that the sum total of shear areas of the pull grooves which will be engaged by the installation tool is capable of supporting the pulling force necessary to fully set the fastener. Note that in order to optimize material usage and minimize the amount of material required the effective total shear area is selected to be a preselected minimum magnitude. Ideally the minimum effective shear area would be that just sufficient to accept the maximum shear stress imposed by the maximum anticipated loads. This minimum shear area, however, is set greater than the ideal in order to accommodate variations in manufacturing, dimensional and material tolerances. With the above construction and by providing the minimum number of pull grooves having the minimum required total effective shear area, it is possible to reduce the length of the pintail portion **28** to a minimum; this can be a length generally equal to approximately the nominal diameter of the smooth shank portion of the pin **12**.

It should also be noted that each of crests **36** through **42** of pintail portion **28**, as well as each of the jaw crests **90** through **96** are sufficiently radiused at their peaks so as to assist the tool **52** to be cammed into or out of full engagement with all of the pull grooves **34** should tool **52** be actuated when, for example, pintail crest **36** and jaw crest **90** are positioned in radial alignment. This arrangement will reduce the possibility of jaw portions **68** being damaged or broken should crests **36** and **90** be so aligned upon actuation of tool **52**.

Further, while the present invention is illustrated as including a pin **12** having a breakneck groove **32** provided thereon, in some applications it may be possible to eliminate this breakneck and to allow pintail portion to remain attached to pin member **12**.

Note that the diameter of the bore **56** represents the final swage diameter of the collar **22**. This, of course, limits the maximum diameter of the surface **89** of the jaw portion **68**. At the same time the wall thickness of the jaw portion **68** will be limited by the contour of the teeth **70**. By utilizing the generally conical shape for the pintail portion **34** and hence for the area of teeth **70** an increase in wall thickness in the jaw portion **68** across the valley **104** will provide an increase in strength as contrasted to that resulting if a uniform diameter pintail portion **34** and teeth **70** were provided. Thus an additional advantage of the conical shape lies in an increase in strength of the jaw portion **68**.

While the present invention has been illustrated and described above with regard to a fastener having a minimum length pintail portion, it is possible in some cases to totally eliminate the pintail portion. To this end a different form of invention is illustrated and will be described with reference to FIG. **6**. A fastener **105** is shown therein and comprises a pin **106** having a shank portion **108** with a head **110** provided on one end thereof. Pin **106** is shown installed within prepared openings **112** and **114** of workpieces **116** and **118**, respectively, and has a swageable collar **120** assembled thereto. Shank portion **108** has a plurality of annular lock grooves **122** provided thereon adjacent end **124** into which collar **120** is swaged during setting of the fastener.

Pin **106** is provided with an opening extending axially inwardly from end **124** thereof, which opening has a plurality of pull grooves **128** provided therein which are defined by crests **130**, **132** and **134** and alternating valleys **136**, **138**, and **140**.

A pulling tool **142** comprises an anvil portion **144** having an axially extending bore **146** provided therein opening outwardly through end portion **148** and provided with a generally frusto conically shaped surface **150** immediately adjacent thereto. A collet assembly **152** includes a mandrel **153** movably disposed within bore **146** and has a forward expandable nose portion **154** having a multitoothed outer surface contoured to correspond to the contour of pull grooves **128** and engageable therewith. Nose portion **154** is comprised of a plurality of axially extending fingers or segments and has a bore **156** extending axially therethrough within which is disposed an expansion pin **158** which operates to cause the axially extending segments of nose portion **154** to move radially outwardly as it moves into bore **156**.

Thus, in order to set fastener **105**, nose portion **154** is inserted into the opening in end **124** of pin **106**. At this time the fingers or segments of nose portion **154** can move radially inwardly permitting the noted insertion. Thereafter, the tool **142** is actuated and pin **158** is caused to move axially into bore **156** thereby causing the axially extending segments of nose portion **154** to be radially expanded into engagement with pull grooves **128** and thereby enable installation tool **142** to exert a pulling force on pin **106** and effect relative movement of anvil portion **144** so as to swage collar **120** into engagement with locking grooves **122**.

It should be noted that the specific number of pull grooves provided within end portion **124** of pin **106** will be selected so as to ensure a sufficient total shear area thereof to withstand the forces necessary to set the fastener. In order to ensure that all of the crests **130–134** will be engaged by the corresponding teeth in nose portion **154**, the relative diameters of alternating crests **130** through **134** and valleys **136** through **140** and the corresponding valleys and crests of nose portion **154** are controlled to incorporate the disabling go, no-go feature described above with reference to FIGS. **1** through

5 thereby described above with reference to FIGS. 1 through 5 thereby precluding the possibility of engagement of less than all of the pull grooves by the nose portion **154** of the installation tool and thereby reducing the likelihood of stripping.

Thus, the present invention provides a pull-type fastener which enables the length of the pintail to be substantially reduced to a minimum length just necessary to accept the pulling force necessary for installation of the fastener; in a different form of the invention the pintail is eliminated entirely. Reducing the length of the pintail affords significant cost savings particularly in fasteners fabricated from exotic metals such as titanium without any reduction of strength or ease of installation. Further, the pull grooves and associated jaw portions of the installation tools are designed so as to effectively reduce the likelihood of the pull grooves being stripped due to improper positioning of or premature actuation of the installation tool.

While it will be apparent that the preferred embodiments of the invention disclosed are well calculated to provide the advantages and features above stated, it will be appreciated that the invention is susceptible to modification, variation and change without departing from the proper scope or fair meaning of the subjoined claims.

What is claimed is:

1. In a system for securing a plurality of workpieces including a two piece pull-type fastener comprising a pin and a swageable collar, an installation tool having a collet assembly including a jaw portion having a plurality of teeth engageable with a plurality of pull grooves provided on said pin and an anvil engageable with said collar, said jaw portion being operative to exert a pulling force on said pin so as to cause said anvil to swage said collar into engagement with a plurality of locking grooves provided on said pin, improved means for enabling said installation tool to exert said pulling force on said pin so as to thereby set said fastener comprising at least a predetermined number of pull grooves provided on said pin, said plurality of teeth on said jaw portion being at least equal to said predetermined number of pull grooves, disabling means on said installation tool and said pin for preventing gripping engagement by said teeth of less than said predetermined number of pull grooves whereby stripping of any of said predetermined number of pull grooves by applying said pulling force through less than all of said predetermined number of pull grooves is inhibited.

2. A system as set forth in claim **1** wherein said pull grooves are disposed in a pintail portion of said pin.

3. A system as set forth in claim **2** further including a breakneck groove disposed between plurality of pull grooves and said lock grooves.

4. A system as set forth in claim **2** wherein said pintail portion has a length equal to approximately the nominal diameter of said pin.

5. A system as set forth in claim **1** wherein said plurality of pull grooves are defined by alternating crests and valleys, said crests and said teeth being sufficiently radiused at their peaks to provide a camming action should said installation tool be actuated to close said jaws when said teeth are in radial alignment with said crests.

6. A system as set forth in claim **1** wherein said plurality of pull grooves are disposed within an opening provided in one end of said pin member.

7. A system as set forth in claim **6** wherein said plurality of pull grooves are defined by alternating crests and valleys, said crests and said teeth being sufficiently radiused at their peaks to provide a camming action should said installation tool be actuated to close said jaws when said teeth are in radial alignment with said crests.

8. In a system for securing a plurality of workpieces including a two piece pull-type fastener comprising a pin and a swageable collar, said pin having a shank including a pintail portion and having an enlarged head, an installation tool having a collet assembly including a plurality of jaws each having a plurality of teeth engageable with a plurality of pull grooves provided on said pin and an anvil engageable with said collar, said jaw portion being operative to exert a pulling force on said pin so as to cause said anvil to swage said collar into engagement with a plurality of locking grooves provided on said pin, improved means for enabling said installation tool to exert said pulling force on said pin so as to thereby set said fastener comprising at least a predetermined number of pull grooves provided on said pin, said plurality of teeth on each of said jaws being at least equal to said predetermined number of pull grooves, said predetermined number of said pull grooves having a total effective shear area relative to said teeth to enable a pulling force of a preselected minimum magnitude, said minimum magnitude being greater by an amount compensating for variations in manufacturing, dimensional and material tolerances than that ideally necessary to set said fastener by said installation tool when said jaws engage at least said predetermined number of pull grooves, disabling means on said installation tool and said pin for preventing gripping engagement by said teeth of less than said predetermined number of pull grooves whereby stripping of any of said predetermined number of pull grooves by applying said pulling force through less than all of said predetermined number of pull grooves is inhibited.

9. A system as set forth in claim **8** wherein said jaws are actuable from an open to a closed position whereby said teeth grip said predetermined number of pull grooves in said closed position, said plurality of pull grooves are defined by alternating crests and valleys, each of said crests having a diameter less than the diameter of that one preceding it, said teeth being defined by alternating crests and valleys which, with said jaws in said closed position, are similar in shape to said crests and valleys of said plurality of pull grooves whereby said teeth can grip said predetermined number of pull grooves, when said jaws are in said closed position each of said crests of said teeth having a diameter sufficient to overengage one of said crests of said predetermined number of pull grooves and to clear each successive one thereafter so as to thereby prevent engagement of said teeth with less than all of said predetermined number of said pull grooves.

10. In a fastening system for joining a plurality of workpieces including a two piece pull-type fastener having a swageable collar and a pin including a shank and a head provided at one end of said shank portion, an installation tool having an anvil and a collet provided with jaws engageable with a plurality of pull grooves provided on a pintail portion disposed at another end of said shank whereby said installation tool is operative to exert a pulling force on said pin so as to enable said anvil to swage said collar into engagement with locking groove means provided on said shank portion between said pintail portion and said head, improved means for exerting said pulling force wherein said pintail portion

is of a length approximately the nominal diameter of said shank portion and said plurality of pull grooves includes at least a predetermined number, each of said predetermined number of pull grooves having an effective shear area associated therewith, said predetermined number of said pull grooves having a total effective shear area to enable a pulling force of a preselected minimum magnitude with said magnitude being just greater than that ideally necessary to set said fastener by said installation tool when said jaws are engaged with said predetermined number of pull grooves, said magnitude including an amount compensating for predetermined variations between fasteners and said jaws whereby the length of said pintail portion is minimized.

11. A pull-type fastener for securing a plurality of workpieces together comprising: a pin having an elongated shank portion and a head provided at one end thereof; a plurality of lock grooves provided on said shank portion, said lock grooves being adapted to have a collar swaged into locking engagement therewith upon setting of said fastener; a plurality of pull grooves provided on said shank portion, said pull grooves being engageable by an installation tool for setting said fastener, by a pulling force applied through said pull grooves said pull grooves being defined by alternating crests and valleys, each of said crests having a diameter less than the diameter of the preceding one of said crests.

12. A fastener as set forth in claim **11** with said plurality of pull grooves having a total effective shear area to enable a pulling force of a preselected minimum magnitude with said magnitude being greater than that necessary to set said fastener.

13. A fastener as set forth in claim **12** wherein said pull grooves are disposed within an opening provided in the other end of said shank portion.

14. A pull-type fastener for securing a plurality of workpieces together comprising: a pin having an elongated shank and a head provided at one end thereof; said shank including a pintail portion at the opposite end, a plurality of lock grooves provided on said shank between said head and said pintail portion, said lock grooves being adapted to have a collar swaged into locking engagement therewith upon setting of said fastener; a plurality of pull grooves provided on said pintail portion, said pull grooves being engageable by an installation tool for setting said fastener by a pulling force applied through said pull grooves, said pull grooves being defined by alternating crests and valleys, each of said crests having a diameter less than the diameter of that one preceding it.

15. A fastener as set forth in claim **14** with said plurality of pull grooves having a total effective shear area to enable a pulling force of a preselected minimum magnitude with said magnitude being just greater than that ideally necessary to set said fastener with said magnitude including an amount compensating for predetermined variations between fasteners whereby the length of said pintail portion is minimized.

16. A fastener as set forth in claim **15** with said pintail portion having a length equal to approximately the nominal diameter of said pin.

17. A fastener as set forth in claim **15** wherein said pin further includes a breakneck groove disposed between said shank portion and said pintail portion, said installation tool being operative to separate said pintil portion from said shank portion upon completion of setting of said fastener.

18. In a system for securing a plurality of workpieces together by means of a two piece fastener including a pin having a shank with a head provided at one end, a swageable collar, an installation tool having an anvil and a collet assembly provided with a plurality of jaws engageable with a plurality of pull grooves provided on the shank whereby said installation tool exerts a pulling force on the pin so as to enable said anvil to move into engagement with said swage the collar into a plurality of lock grooves provided on the shank between the head and the pintail portion, the improvement comprising: said jaws of said installation tool having a plurality of teeth engageable with the plurality of lock grooves, said jaws being actuable from an open to a closed position and adapted to grip said pull grooves in one position and to release said pull grooves in the other position; said teeth being defined by alternating crests and valleys, each of said crests defining a diameter when said jaws are in said closed position less than the diameter defined by the preceding one of said crests.

19. The installation tool of claim **18** wherein said pull grooves have crests and valleys similar in shape to said crests and valleys of said teeth in said one position, each of said crests of said teeth having a diameter sufficient to overengage one of the crests of the pull grooves and to clear each successive one thereafter with said jaws in said one position.

20. The installation tool of claim **18** with said anvil having a central bore for swaging the collar onto the pin, said jaws being defined by a plurality of segments in guiding engagement with said central bore whereby said teeth of said jaws are moved into said one position.

21. The installation tool of claim **20** with said jaws having portions with said teeth extending beyond said central bore of said anvil when in said other position.

22. The installation tool of claim **21** with the pull grooves having crests and valleys similar in shape to said crests and valleys of said teeth in said one position, each of said crests of said teeth having a diameter sufficient to overengage one of the crests of the pull grooves and to clear each successive one thereafter with said jaws in said one position.

23. A system as set forth in claim **1** wherein said jaws are actuable from an open to a closed position whereby said teeth grip said predetermined number of pull grooves in said closed position, said plurality of pull grooves are defined by alternating crests and valleys, each of said crests having a diameter less than the diameter of that one preceding it, said teeth being defined by alternating crests and valleys which, with said jaws in said closed position, are similar in shape to said crests and valleys of said predetermined number of pull grooves whereby said teeth can grip said predetermined number of pull grooves, when said jaws are in said closed position each of said crests of said teeth having a diameter sufficient to overengage one of said crests of said predetermined number of pull grooves and to clear each successive one thereafter so as to thereby prevent engagement of said teeth with less than all of said predetermined number of said pull grooves.

24. A pull-type fastener for securing a plurality of workpieces together comprising: a pin having an elongated shank portion and a head provided at one end thereof; lock groove means provided on said shank portion, said lock groove means being adapted to have a collar swaged into locking engagement therewith upon setting of said fastener; a plurality of pull grooves provided on said shank portion, said pull grooves being

engageable by an installation tool for setting said fastener, by a pulling force applied through said pull grooves, said pull grooves being defined by alternating crests and valleys, each of said crests having a diameter less than the diameter of the preceding one of said crests.

25. A fastener as set forth in claim **24** with said plurality of pull grooves having a total effective shear area to enable a pulling force of a preselected minimum magnitude with said magnitude being greater than that necessary to set said fastener.

26. In a system for securing a plurality of workpieces including a pull-type fastener comprising a pin having a shank including a pintail portion and having an enlarged head, an installation tool having a collet assembly including a plurality of jaws each having a plurality of teeth engageable with a plurality of pull grooves provided on said pin and an anvil engageable with collar means, said jaw portion being operative to exert a pulling force on said pin so as to set said fastener and to cause said anvil to move said collar means into engagement with lock groove means provided on said pin, improved means for enabling said installation tool to exert said pulling force on said pin so as to thereby set said fastener comprising at least a predetermined number of pull grooves provided on said pin, said plurality of teeth on each of said jaws being at least equal to said predetermined number of pull grooves, said predetermined number of said pull grooves having a total effective shear area relative to said teeth to enable a pulling force of a preselected minimum magnitude, said minimum magnitude being greater by an amount compensating for variations in manufacturing, dimensional and material tolerances than that ideally necessary to set said fastener by said installation tool when said jaws engage at least said predetermined number of pull grooves, disabling means on said installation tool and said pin for preventing gripping engagement by said teeth of less than said predetermined number of pull grooves whereby stripping of said predetermined number of pull grooves by applying said pulling force through less than all of said predetermined number of said pull grooves is inhibited.

27. A system as set forth in claim **26** wherein said jaws are actuable from an open to a closed position whereby said teeth grip said predetermined number of pull grooves in said closed position, said plurality of pull grooves are defined by alternating crests and valleys, each of said crests having a diameter less than the diameter of that one preceding it, said teeth being defined by alternating crests and valleys which, with said jaws in said closed position, are similar in shape to said crests and valleys of said predetermined number of pull grooves whereby said teeth can grip said predetermined number of pull grooves, when said jaws are in said closed position, each of said crests of said teeth having a diameter sufficient to overengage one of said crests of said predetermined number of pull grooves and to clear each successive one thereafter so as to thereby prevent engagement of said teeth with less than all of said predetermined number of said pull grooves.

28. A pull-type fastener for securing a plurality of workpieces together comprising: a pin having an elongated shank and a head provided at one end thereof; said shank including a pintail portion at the opposite end, lock groove means provided on said shank between said head and said pintail portion, said lock groove means being adapted to have a collar means moved into locking engagement therewith upon setting of said fastener; a plurality of pull grooves provided on said pintail portion, said pull grooves being engageable by an installation tool for setting said fastener by a pulling force applied through said pull grooves, said pull grooves being defined by alternating crests and valleys, each of said crests having a diameter less than the diameter of that one preceding it.

29. A fastener as set forth in claim **28** with said plurality of pull grooves having a total effective shear area to enable a pulling force of a preselected minimum magnitude with said magnitude being just greater than the ideally necessary to set said fastener with said magnitude including an amount compensating for predetermined variations between fasteners whereby the length of said pintail portion is minimized.

30. A fastener as set forth in claim **28** wherein said pin further includes a breakneck groove disposed between said shank portion and said pintail portion, said installation tool being operative to separate said pintail portion from said shank portion upon completion of setting of said fastener.

31. In a system for securing a plurality of workpieces together by means of a two piece fastener including a pin having a shank with a head provided at one end, collar means, an installation tool having an anvil and a collet assembly provided with a plurality of jaws engageable with a plurality of pull grooves provided on the shank whereby said installation tool exerts a pulling force on the pin so as to set said fastener including enabling said anvil to move into engagement with and swage said collar means into lock groove means provided on the shank between the head and the pintail portion, the improvement comprising: said jaws of said installation tool having a plurality of teeth engageable with the plurality of pull grooves, said jaws being actuable from an open to a closed position and adapted to grip said pull grooves in one position and to release said pull grooves in the other position, said teeth being defined by alternating crests and valleys, each of said crests defining a diameter when said jaws are in said closed position less than the diameter defined by the preceding one of said crests.

32. In a system for securing a plurality of workpieces including a pull-type fastener comprising a pin having an elongated shank portion and a head provided at one end thereof, locking groove means on said shank portion, collar means adapted to be swaged into said locking groove means upon setting of said fastener, an installation tool having a collet assembly including a jaw portion having a plurality of teeth engageable with a plurality of pull grooves provided on said shank portion and an anvil engageable with said collar means, said jaw portion being operative to exert a pulling force on said pin so as to set said fastener and to cause said anvil to swage said collar means into said locking groove means, improved means for enabling said installation tool to exert said pulling force on said pin so as to thereby set said fastener comprising at least a predetermined number of pull grooves provided on said pin, said plurality of teeth on said jaw portion being at least equal to said predetermined number of pull grooves, said predetermined number of pull grooves defining a shape substantially conforming to the shape of said plurality of teeth on said jaw portion when said jaw portion is in an engaging position, said substantially conforming shape of said predetermined number and said plurality of teeth cooperating to prevent gripping engagement by said teeth of less than said predetermined number of pull grooves whereby stripping of one or more of said predetermined number of pull grooves by applying said pulling force through less than all of said predetermined number of pull grooves is inhibited.

* * * * *

UNITED STATES PATENT AND TRADEMARK OFFICE

CERTIFICATE OF CORRECTION

PATENT NO. : 4,299,519

DATED : November 10, 1981

INVENTOR(S) : Robert J. Corbett

It is certified that error appears in the above—identified patent and that said Letters Patent is hereby corrected as shown below:

Col. 3, line 63, "s." should be --S.--.

Col. 7, line 1, delete entire line.

Col. 7, line 2, delete "through".

Col. 7, line 53, (Claim 3), following "between" insert --said--.

Col. 10, line 9, (Claim 18), "said" should be --and--.

Col. 12, line 9, (Claim 29), "the" should be --that--.

Signed and Sealed this

Eighteenth Day of *May 1982*

[SEAL]

Attest:

GERALD J. MOSSINGHOFF

Attesting Officer

Commissioner of Patents and Trademarks