US 20130132094A1

(19) United States

(12) Patent Application Publication

(10) Pub. No.: US 2013/0132094 A1

(43) Pub. Date: May 23, 2013

Lim

(54) SYSTEM AND METHOD FOR VOICE ACTUATED CONFIGURATION OF A CONTROLLING DEVICE

(75) Inventor: **Jonathan Lim**, Cypress, CA (US)

(73) Assignee: **Universal Electronics Inc.**, Cypress, CA (US)

(21) Appl. No.: **13/298,629**

(22) Filed: **Nov. 17, 2011**

Publication Classification

(51) **Int. Cl.**
G10L 11/00 (2006.01)

(52) **U.S. Cl.**
USPC **704/275**; 704/E11.001

(57) **ABSTRACT**

A speech recognition engine is provided voice data indicative of at least a brand of a target appliance. The speech recognition engine uses the voice data indicative of at least a brand of the target appliance to identify within a library of codesets at least one codeset that is cross-referenced to the brand of the target appliance. The at least one codeset so identified is then caused to be provisioned to the controlling device for use in commanding functional operations of the target appliance.

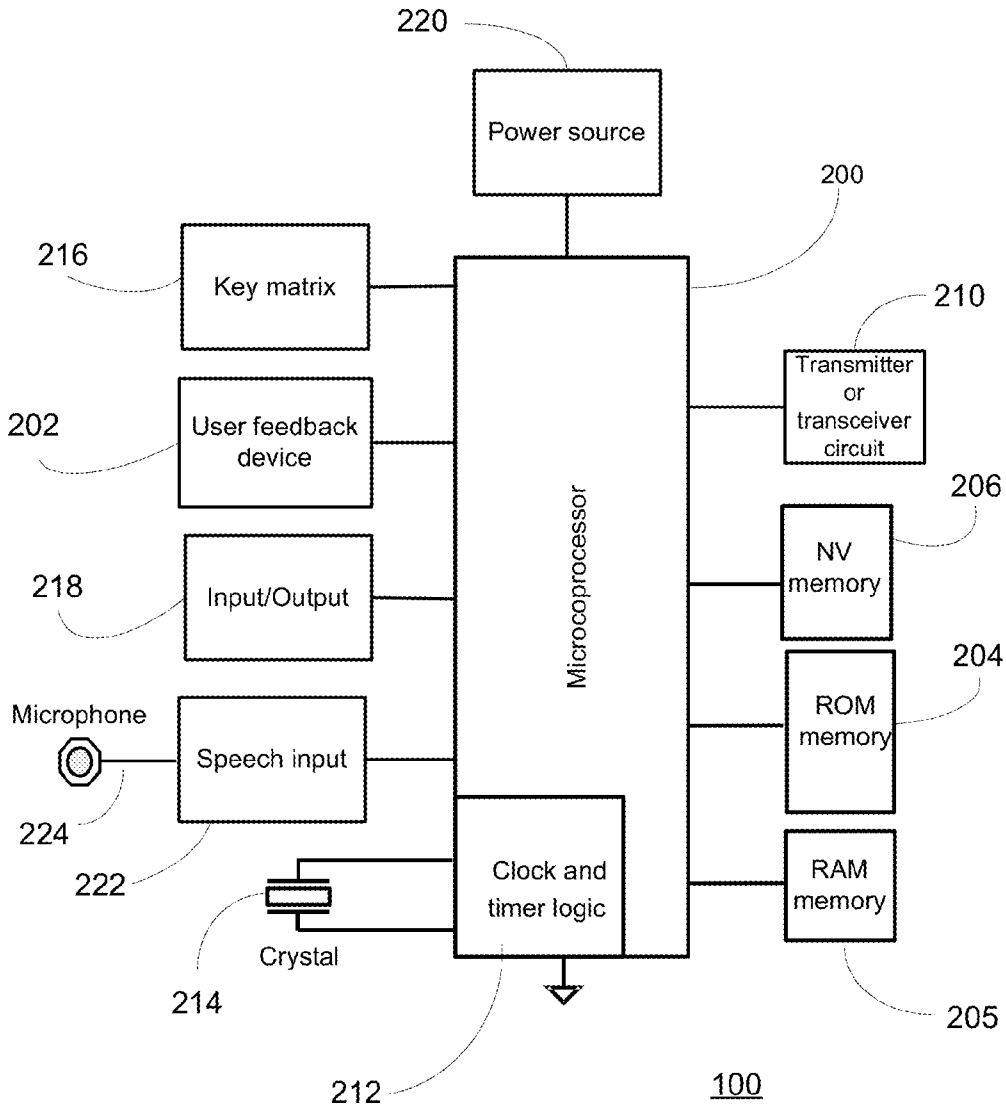

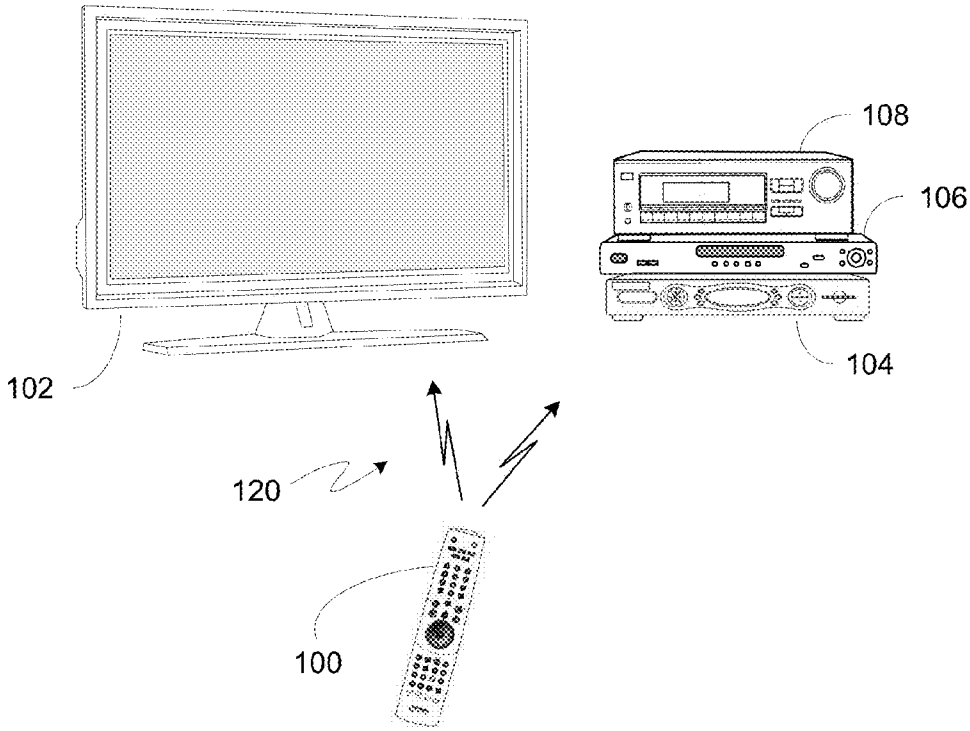

Figure 1a

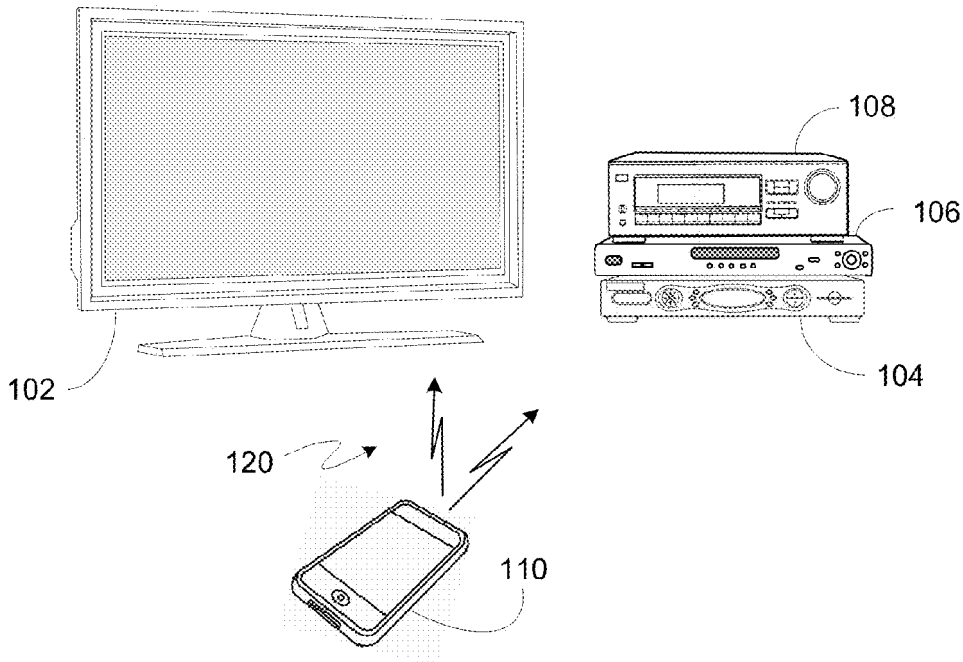

Figure 1b

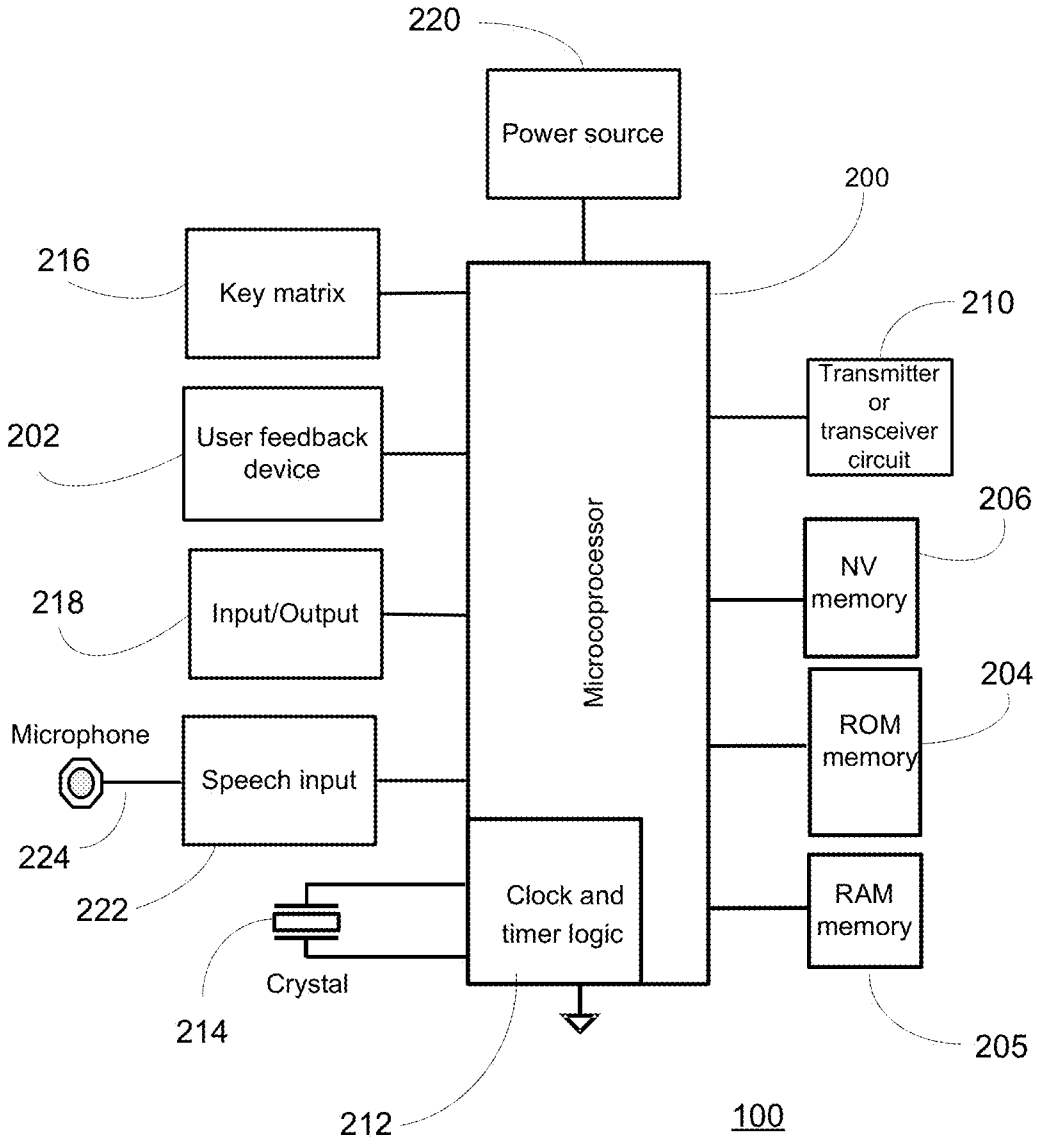
220
Power source
200
216
Key matrix
210
Transmitter or transceiver circuit
202
User feedback device
206
NV memory
218
Input/Output
Microcoprocessor
204
ROM memory
Microphone
Speech input
224
222
Clock and timer logic
RAM memory
Crystal
214
205
212
100

Figure 2

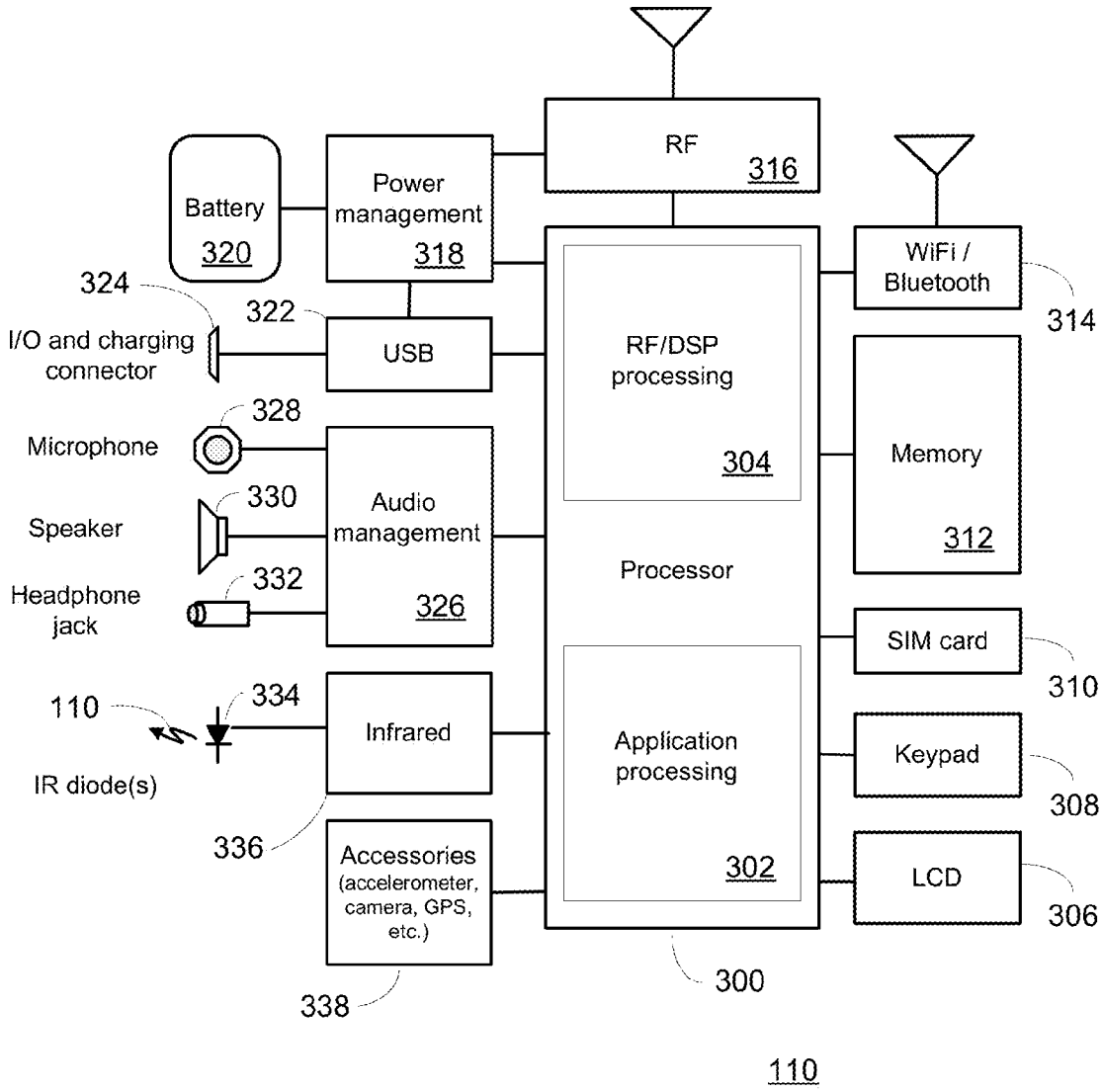
RF
316
Battery
320
Power management
318
WiFi / Bluetooth
314
324
322
I/O and charging connector
USB
RF/DSP processing
304
328
Microphone
Memory
312
330
Speaker
Audio management
326
Processor
332
Headphone jack
SIM card
310
110
334
Infrared
Application processing
302
Keypad
308
IR diode(s)
336
Accessories (accelerometer, camera, GPS, etc.)
LCD
306
300
338
110

Figure 3

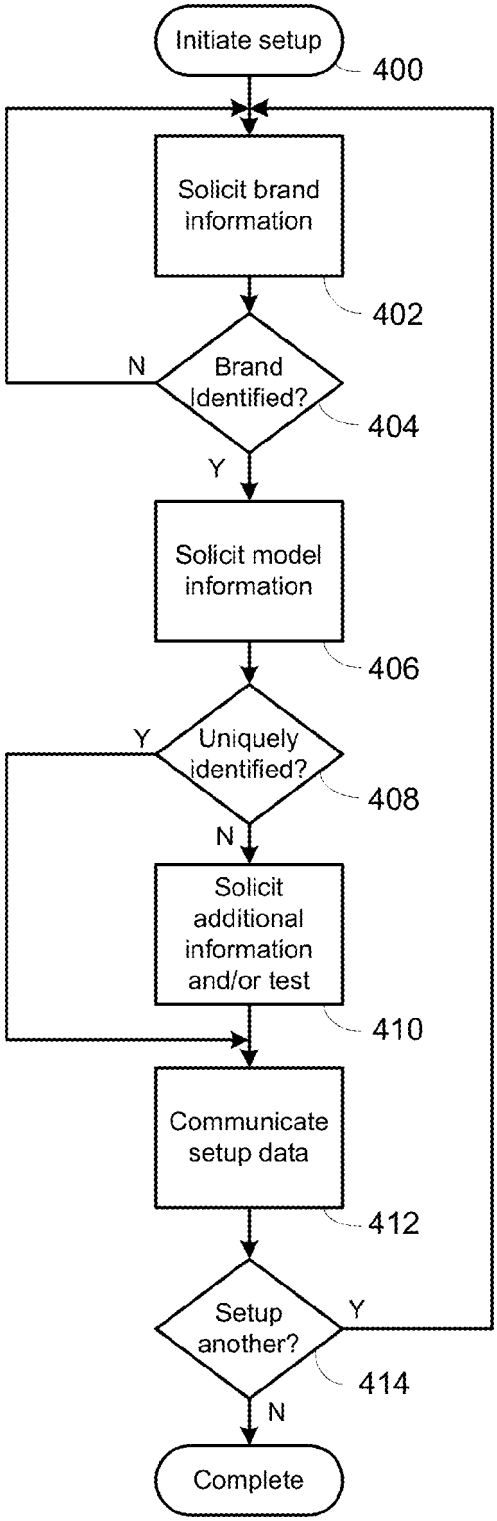
Initiate setup
400
Solicit brand information
402
Brand Identified?
404
N
Y
Solicit model information
406
Uniquely identified?
408
Y
N
Solicit additional information and/or test
410
Communicate setup data
412
Setup another?
414
Y
N
Complete

Figure 4

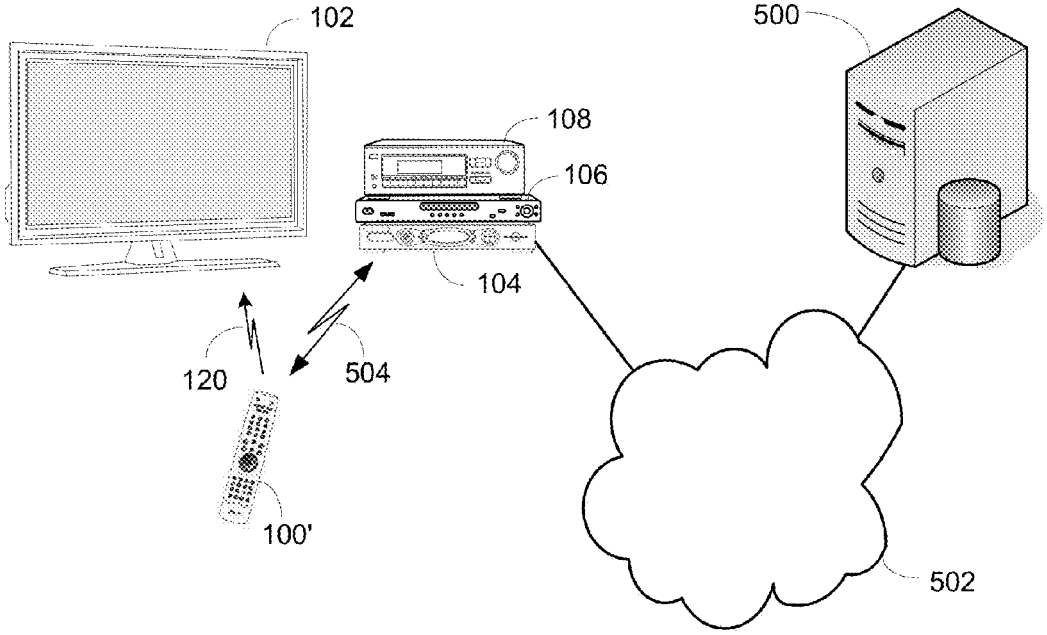

Figure 5a

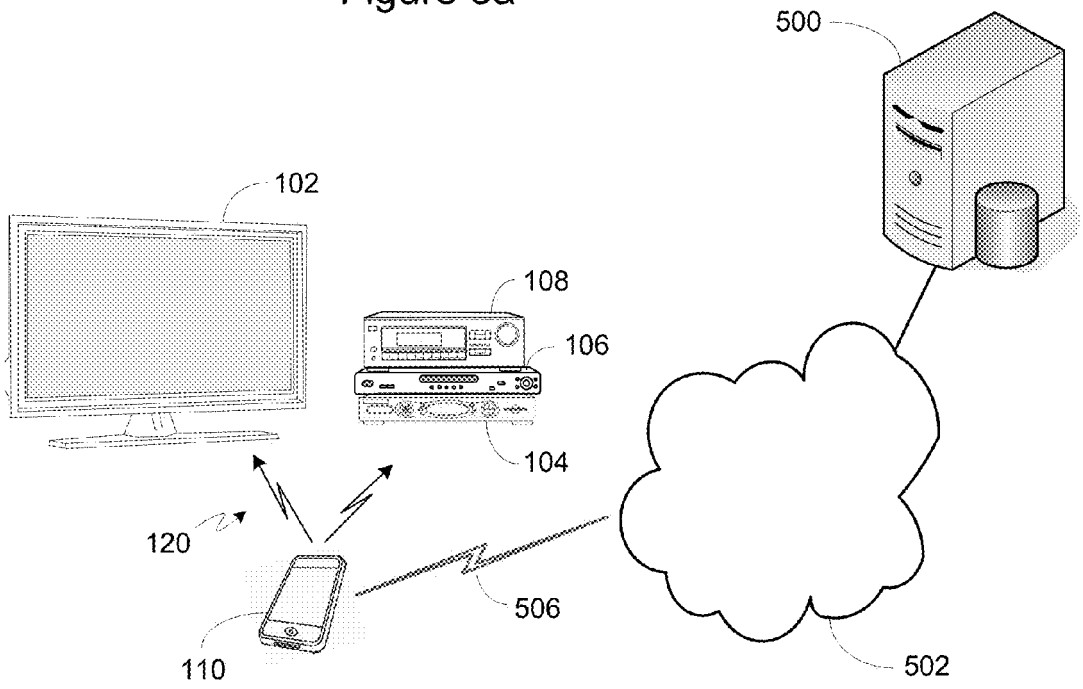

Figure 5b

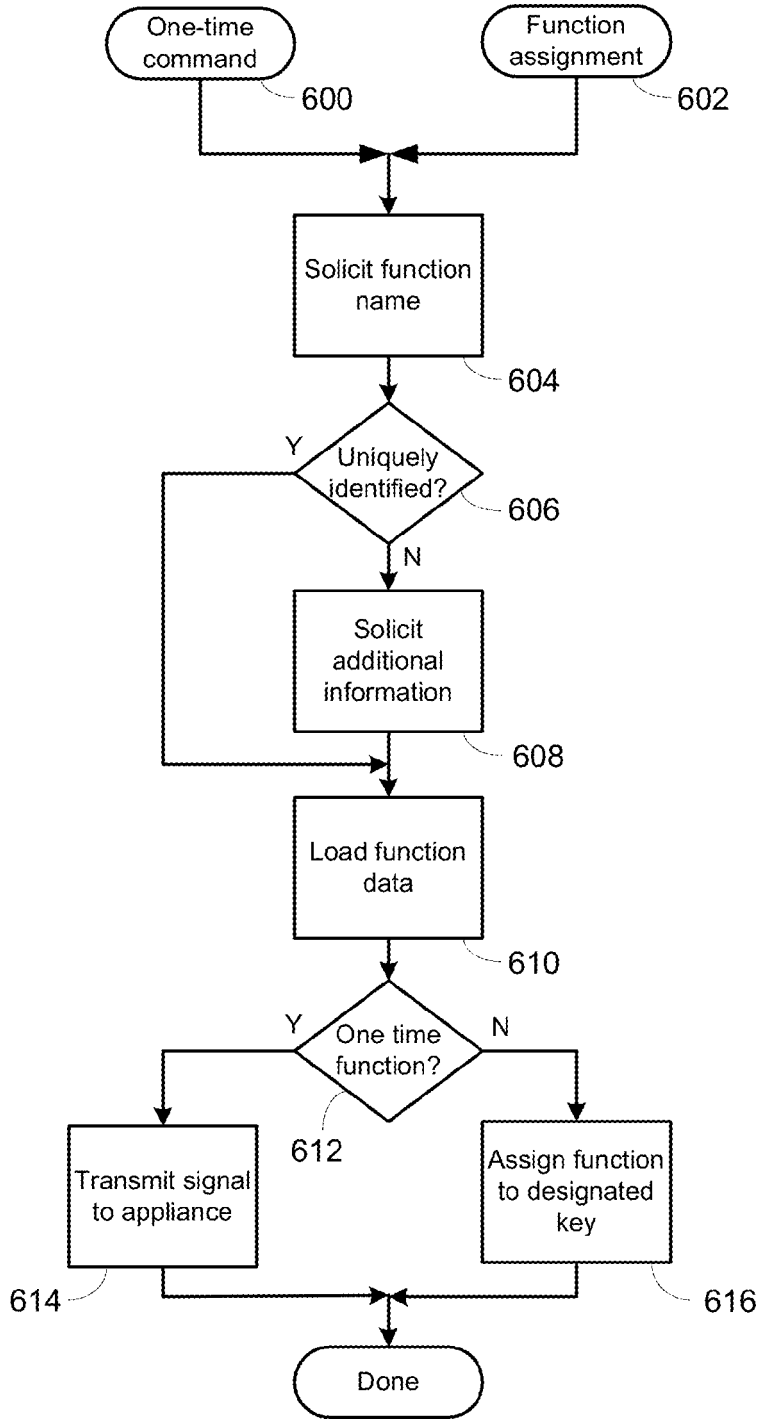
One-time command
600
Function assignment
602
Solicit function name
604
Uniquely identified?
606
Y
N
Solicit additional information
608
Load function data
610
One time function?
612
Y
N
Transmit signal to appliance
614
Assign function to designated key
616
Done

Figure 6

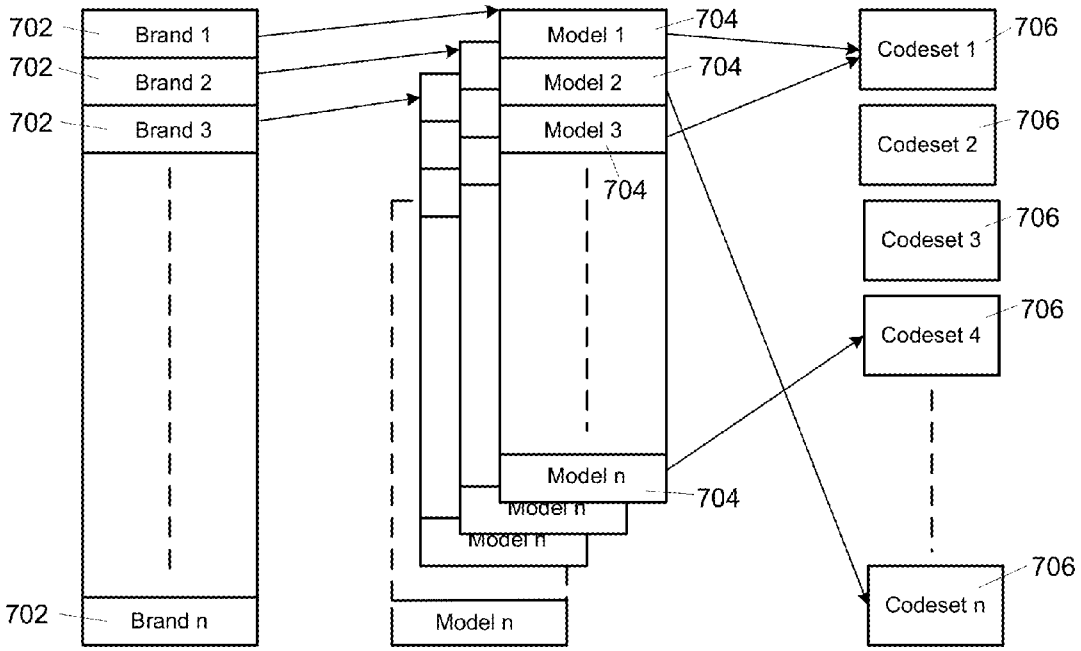

Brand/model/codeset database

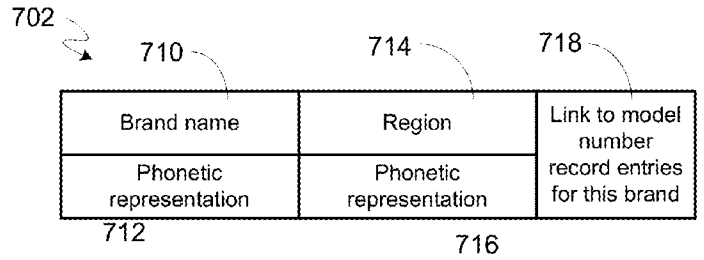

Brand record

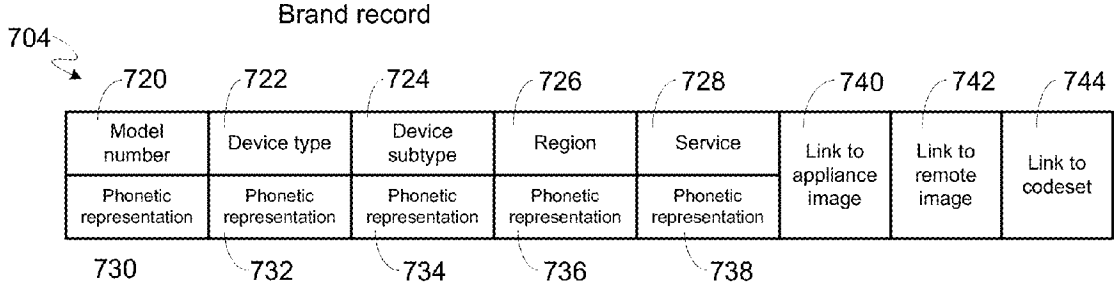

Model record

Figure 7a

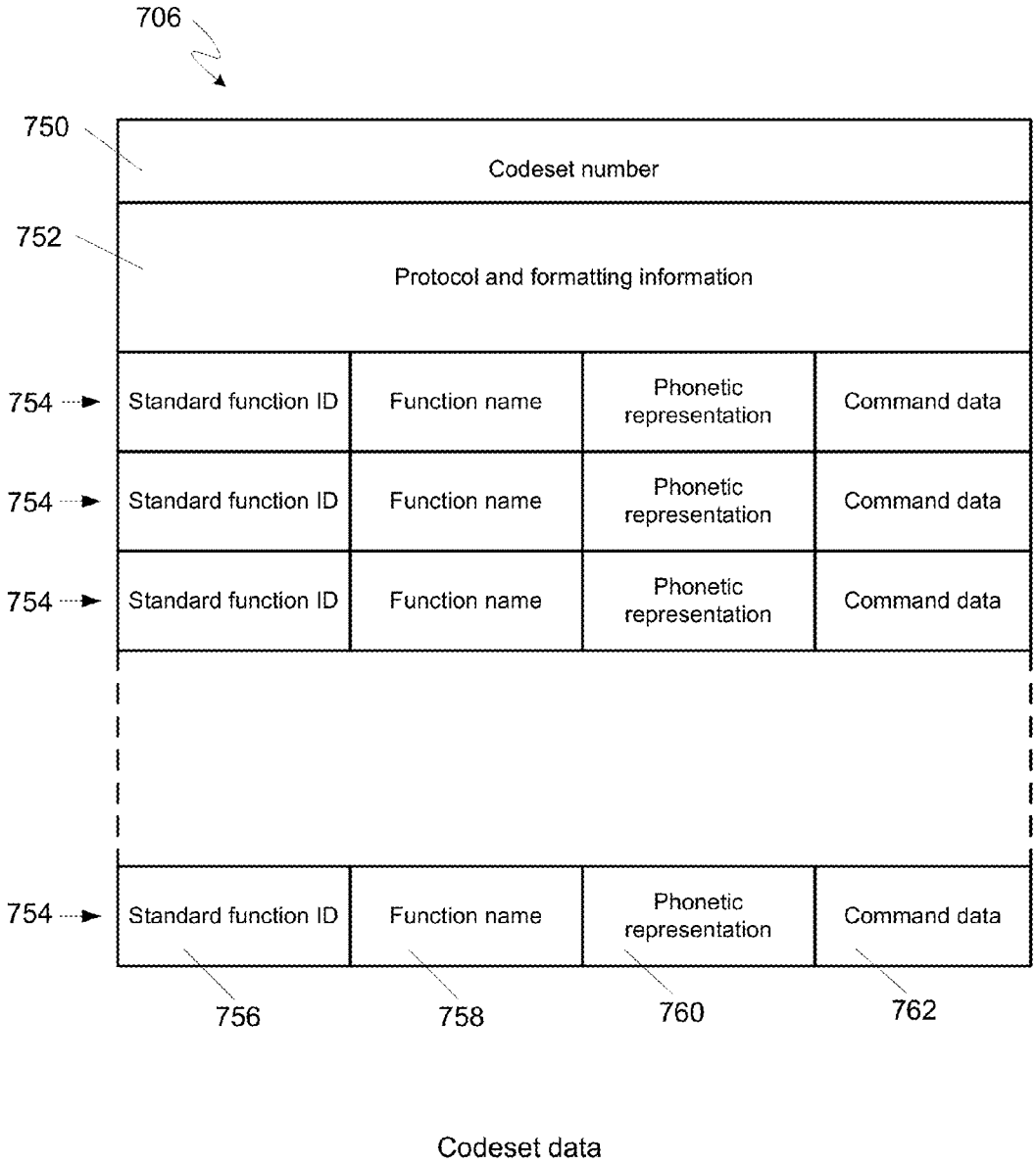
706
750
Codeset number
752
Protocol and formatting information
754
Standard function ID
Function name
Phonetic representation
Command data
754
Standard function ID
Function name
Phonetic representation
Command data
754
Standard function ID
Function name
Phonetic representation
Command data
754
Standard function ID
Function name
Phonetic representation
Command data
756
758
760
762
Codeset data

Figure 7b

SYSTEM AND METHOD FOR VOICE ACTUATED CONFIGURATION OF A CONTROLLING DEVICE

BACKGROUND

[0001] This following generally relates to remote control systems and, more particularly, to a system and method for setting up and configuring a controlling device such as a universal remote control to command functions of one or more types of remotely controllable appliances of one or more manufacturers. Exemplary types of appliances include, but are not limited to televisions, AV receivers, cable or satellite set top boxes (STBs), DVD players, digital video recorders (DVRs), thermostats, game consoles, etc.

[0002] Manufacturers typically provide a remote control with an appliance and, as such, different appliance types of different manufacturers are often commanded with different remote controls. To minimize the number of individual remote controls a user requires, universal remote controls have been developed. Accordingly, universal remote controls and/or universal remote control application software for commanding various functions of various types of appliances of various manufacturers have become quite widespread. By way of example, universal remote controls are described in commonly assigned U.S. Pat. Nos. 4,959,810, 5,255,313 and 5,552,917.

[0003] In a common method of setting up a universal remote control, codes for commanding functions of an appliance are learned from a remote control supplied by the manufacturer with that appliance. The learned codes, which are stored within the universal remote control, are then available for subsequent transmission to the appliance. Alternatively, codes for commanding functions of appliances of various types and various manufacturers may be preprogrammed into the universal remote control. The user may then interact with the universal remote control to identify to the universal remote control which appliance(s) the user desires to command, i.e., the user manually enters an appliance or brand code, usually obtained from a tabulation in a printed user manual or the like, into the universal remote control and the universal remote control utilizes that user provided identity information to access those preprogrammed codes that are appropriate for commanding the identified appliance(s). In this regard, examples of known methods for performing an initial setup of an universal remote control may be found in, for example, the above mentioned U.S. Pat. No. 4,959,810 as well as U.S. Pat. No. 5,614,906, entitled "Method for Selecting a Remote Control Command Set," or U.S. Pat. No. 4,703,359 entitled "Universal Remote Control Unit with Model Identification Capability," each of which is incorporated herein by reference in its entirety.

[0004] As an alternative to printed tabulations and the like, various methods have been proposed based on the use of a personal computer to access listings of appliance identification data and/or command codes. Examples of such methods may be found in U.S. Pat. No. 7,612,685 entitled "Online remote control configuration system" or co-pending U.S. patent application Ser. No. 12/490,978 entitled "System and Method to Facilitate Configuration of a Universal Controlling Device," both of which are incorporated herein by reference in their entirety.

[0005] Furthermore, in certain instances the user of a controlling device, whether universal or not, may be provided with the ability to customize the functionality of the controlling device, for example by rearranging which functions are assigned to which keys, by adding lesser-used key functions which were not part of the default command set provisioned on the controlling device, etc. Once again, such operations may be performed by entering data obtained from a tabulation in a printed user manual, as described for example in U.S. Pat. No. 5,515,052 entitled "Universal Remote Control with Function Synthesis," or by utilizing a personal computer and/or an Internet based service such as described for example in U.S. Pat. No. 7,093,003 entitled "System and Method for Upgrading the Remote Control Functionality of a Device," both patents of common ownership and incorporated herein by reference in their entirety.

[0006] While such known methods do work for their intended purpose, it has been seen that the process of setting up and configuring a controlling device such as a universal remote control may remain demanding, exacting, and generally frustrating for many users. For example, user manuals or other documents containing setup codes and entry instructions may be lost or misplaced, or may be superseded as brand and/or model names evolve or controllable functions are added; a personal computer and/or Internet access may not be readily available at the location of the appliances to be controlled; etc. Accordingly, a need exists for a simplified and more user friendly system and method for conveniently setting up and configuring a controlling device.

SUMMARY

[0007] The subject disclosure generally relates to controlling devices such as universal remote controls, and more specifically to improved methods for setup and configuration of such devices, i.e., the identification and selection of appropriate sets of command data to be associated with the specific appliances to be controlled. To this end, a controlling device may be provisioned with means to receive voice input from a user, e.g., a microphone, such that when placed in a setup mode the controlling device may solicit spoken appliance descriptive information, for example brand and model number, to be processed by a speech recognition system in order to identify the appliance to be controlled and the command data to which it is responsive. As will become apparent, speech recognition and command data identification processing may be performed on the controlling device itself; on a locally situated device such a personal computer or a set top box; remotely at a Web server; or a combination thereof as appropriate for a particular embodiment. Additionally, in certain embodiments the speech recognition capability may be extended to allow a user to further refine the controlling device configuration, for example by assigning extended functionality to certain keys, verbally accessing infrequently used functions, defining activities, etc.

[0008] A better understanding of the objects, advantages, features, properties and relationships of the invention claimed hereinafter will be obtained from the following detailed description and accompanying drawings which set forth illustrative embodiments and which are indicative of the various ways in which the principles of the invention may be employed.

BRIEF DESCRIPTION OF THE DRAWINGS

[0009] For a better understanding of the various aspects of the invention claimed, reference may be had to preferred embodiments shown in the attached drawings in which:

[0010] FIGS. **1***a* and **1***b* illustrate exemplary systems in which controlling devices in accordance with the instant invention may utilized;

[0011] FIG. **2** illustrates a block diagram of exemplary components of the controlling device of FIG. **1***a;*

[0012] FIG. **3** illustrates a block diagram of exemplary components of the controlling device of FIG. **1***b;*

[0013] FIG. **4** illustrates an exemplary method for configuration of a controlling device to match an appliance to be controlled using spoken input;

[0014] FIGS. **5***a* and **5***b* further illustrate exemplary systems in which controlling devices may be configured in accordance with the method of FIG. **4**;

[0015] FIG. **6** illustrates an exemplary method for accessing extended functions of a configured appliance using spoken input; and

[0016] FIGS. **7***a* and **7***b* illustrate the structure of a brand name, model number, and command code database suitable for use in conjunction with the methods of FIGS. **4** and **6**.

DETAILED DESCRIPTION

[0017] Turning now to FIG. **1***a,* there is illustrated an exemplary system in which a controlling device **100** is configured to control various controllable appliances, such as a television **102**, a set top box ("STB") **104**, a DVD player **106** and an AV receiver **108**. As is known in the art, the controlling device **100** may be capable of transmitting commands to the appliances, using any convenient IR, RF, Point-to-Point, or networked protocol **120**, to cause the appliances to perform operational functions. While illustrated in the context of a television **102**, STB **104**, DVD player **106** and AV receiver **108**, it is to be understood that controllable appliances may include, but need not be limited to, televisions, VCRs, DVRs, DVD players, cable or satellite converter set-top boxes ("STBs"), amplifiers, CD players, game consoles, home lighting, drapery, fans, HVAC systems, thermostats, personal computers, etc.

[0018] FIG. **1***b* illustrates a second exemplary system which is similar to that of FIG. **1***a,* but where controlling device functionality may be embodied in a user-installed application software module (generally known in the art as an "app") resident in a smart device **110**, which device may comprise any of a smart phone, a tablet computer, a portable email device, an e-book, a hand-held games and/or game controller, a portable media player, etc. As will be appreciated, in this instance the physical capability for transmitting appliance command signals **120** may be provided by an external adapter, for example as described in U.S. Pat. No. 6,931,231 entitled "Infrared Generator From Audio Signal Source," by a relay device, for example as described in co-pending U.S. patent application Ser. No. 13/071,661 entitled "System and Method for Facilitating Appliance Control Via a Smart Device," or may be built into the smart device, for example as described in co-pending U.S. patent application Ser. No. 13/043,915 entitled "System and Method for Provision of Infrared Signaling in Smart Phones," all of which patents and patent applications are incorporated herein by reference in their entirety.

[0019] With reference to FIG. **2**, a first exemplary embodiment of a controlling device **100** for use in commanding the functional operations of one or more appliances may include, as needed for a particular application, a processor **200** coupled to a ROM memory **204**, a RAM memory **205**, a key matrix **216** (e.g., hard keys, soft keys such as a touch sensitive surface overlaid on a liquid crystal (LCD), and/or an electroluminescent (EL) display), transmission circuit(s) and/or transceiver circuit(s) **210** (e.g., IR and/or RF), a non-volatile read/write memory **206**, a means **202** to provide feedback to the user (e.g., one or more LEDs, illuminable keys, display, buzzer, voice synthesizer with associated speaker, and/or the like), an input/output port **218** such as a serial interface, USB port, modem, Zigbee, WiFi , or Bluetooth transceiver, etc., a power source **220** such as a battery, and clock and timer logic **212** with associated crystal or resonator **214** and speech input means comprising a microphone **224** and associated circuitry **222** for example an analog to digital converter, speech digitizer, etc., as known in the art.

[0020] As will be understood by those skilled in the art, some or all of the memories **204**, **205**, **206** may include executable instructions (collectively, the controlling device program memory) that are intended to be executed by the processor **200** to control the operation of the controlling device **100**, as well as data which serves to define the necessary control protocols and command values for use in transmitting command signals to controllable appliances (collectively, the command data). In this manner, the processor **200** may be programmed to control the various electronic components within the controlling device **100**, e.g., to monitor the key matrix **216**, to cause the transmission of signals, etc. The non-volatile read/write memory **206**, for example an EEPROM, battery-backed up RAM, FLASH, Smart Card, memory stick, or the like, may additionally be provided to store setup data and parameters as necessary. While the memory **204** is illustrated and described as a ROM memory, memory **204** can also be comprised of any type of readable media, such as ROM, FLASH, EEPROM, or the like. Preferably, the memories **204** and **206** are non-volatile or battery-backed such that data is not required to be reloaded after battery changes. In addition, the memories **204**, **205** and **206** may take the form of a chip, a hard disk, a magnetic disk, an optical disk, and/or the like. Still further, it will be appreciated that some or all of the illustrated memory devices may be physically combined (for example, a single FLASH memory may be logically partitioned into different portions to support the functionality of memories **204** and **206** respectively), and/or may be physically incorporated within the same IC chip as the microprocessor **200** (a so called "microcontroller") and, as such, they are shown separately in FIG. **2** only for the sake of clarity.

[0021] To cause the controlling device **100** to perform an action, the controlling device **100** is adapted to be responsive to events, such as a sensed user interaction with the key matrix **216**, sensed sound input, etc. In response to an event, appropriate instructions within the program memory (hereafter the "controlling device operating program") may be executed. For example, when a command function key is actuated on the controlling device **100**, the controlling device **100** may retrieve from the command data stored in memory **204**, **205**, **206** a command value and control protocol corresponding to the actuated function key and, where necessary, current device mode and transmit that command to an intended target appliance, e.g., STB **106**, in a format recognizable by that appliance to thereby control one or more functional operations of that appliance. It will be appreciated that the controlling device operating program can be used not only to cause the transmission of commands and/or data to the appliances, but also to perform local operations. While not limiting, local operations that may be performed by the controlling device

100 may include displaying information/data, favorite channel setup, macro key setup, function key relocation, etc. Examples of local operations can be found in U.S. Pat. Nos. 5,481,256, 5,959,751, and 6,014,092.

[0022] In some embodiments, controlling device **100** may be of the universal type, that is provisioned with a library comprising a multiplicity of command codes and protocols suitable for controlling various appliances - also referred to as sets of command data or codesets. In such cases, for selecting sets of command data to be associated with the specific appliances to be controlled (hereafter referred to as a setup procedure), data may be provided to the controlling device **100** that serves to identify each intended target appliance by its make, and/or model, and/or type. In the embodiment presented, this data may be in the form of spoken input as will be described in greater detail hereafter. Such data allows the controlling device **100** to identify the appropriate command data set within the library of command data that is to be used to transmit recognizable commands in formats appropriate for such identified appliances. The library of command data may represent a plurality of controllable appliances of different types and manufacture, a plurality of controllable appliances of the same type but different manufacture, a plurality of appliances of the same manufacture but different type or model, etc., or any combination thereof as appropriate for a given embodiment.

[0023] In an alternative embodiment controlling device functionality may take the form of a software app resident in a smart device **110**. A representative smart device, illustrated in FIG. **3** in the form of a smart phone, may include as needed for a particular application, processing means **300** which may comprise both an application processing section **302** and an RF/DSP processing section **304**; an LCD display **306**; a keypad **308** which may comprise physical keys, touch keys overlaying LCD **306**, or a combination thereof; a subscriber identification module (SIM) card **310**; memory means **312** which may comprise ROM, RAM, Flash, or any combination thereof; WiFi and/or Bluetooth wireless interface(s) **314**; a wireless telephony interface **316**; power management circuitry **318** with associated battery **320**; a USB interface **322** and connector **324**; an audio management system **326** with associated microphone **328**, speaker **330**, and headphone jack **332**; built-in or add on IR communication means comprising a transmitter and/or receiver **336** with associated IR output diode(s) **334**; and various optional accessory features **338** such as a digital camera, GPS, accelerometer, etc.

[0024] It is known to offer an app for download and installation into memory **312** which app may serve to allow use of the smart phone to transmit commands suitable for operation of entertainment and other appliances. Such an app may draw on a library of codesets suitable for commanding the functional operations of various types of appliances of multiple manufactures and/or models, i.e., a library of codesets for a so-called "universal" controller, as well known in the art. As appropriate for a particular embodiment this library may be resident on the smart device itself, either downloaded as part of or in conjunction with the app or preinstalled in memory **312** or in a separate self-contained command transmitter; may be located externally at a local PC or remote server device accessible to smart device **110** for the download of only those code sets necessary for operation of the configured appliances; or may be located in a command relay device such as described in the previously referenced U.S. patent application Ser. No. 13/043,915.

[0025] In either of these exemplary embodiments, during setup and configuration of the controlling device, a user my provide appliance identification via spoken input as will now be described in conjunction with the flowchart of FIG. **4**. Since the steps involved are similar for either embodiment, it is to be understood that in the following descriptions, except where otherwise indicated the term "controlling device" is intended to encompass, mutatis mutandis, exemplary controlling device **100**, exemplary controlling device **110**, and all equivalents thereof.

[0026] Initially, at step **400** a user may place the controlling device into a setup mode, for example by activating a "setup" key, by selecting that item from a displayed menu of choices, by a voice command, or any other method as appropriate for a particular embodiment. In this context, it will be appreciated that in certain embodiments wherein a controlling device, such as for example controlling device **100'** of FIG. **5***a,* may be enabled to communicate bidirectionally **504** with an appliance such as for example STB **104**, the abovementioned menu displays and any other user prompts, messages, etc., may be presented on a connected appliance such as for example TV **102**.

[0027] Once the setup mode has been initiated, at step **402** the controlling device may prompt the user to speak the brand name of the appliance to be added to the configuration of the controlling device. This and subsequent prompts for voice input may take the form of an illuminated LED and/or "speak" symbol, a displayed text or image, a synthesized spoken message (e.g., where controlling device user feedback means **202** comprises speech synthesis means and a speaker, or where a smart device app has access to speaker **330**), etc. The resulting spoken syllables may be digitized and presented to a speech recognition means for processing and comparison to a phonetic database of brand names which have been cross referenced to appropriate codesets within the library of codesets. As appropriate for a particular embodiment, all or part of said speech recognition processing may be performed by programming on the controlling device itself or, with reference to FIGS. **5***a* and **5***b,* may be performed by programming on a local appliance such as STB **104** which is in bidirectional communication **504** with the controlling device; or may be performed by programming resident on a remote server **500** accessible via a network **502** such as the Internet or PSTN. In the latter case, access to such network may be via an intermediary appliance such as STB **104**, illustrated at **506**, or may be via a local network connection **508**, such as WiFi or Bluetooth, through a gateway device such as a router (not illustrated). As will be appreciated, in those embodiments where the captured voice input data is to be forwarded to another device, in some embodiments it may be subject to initial preprocessing, compression, etc., by programming in the controlling device.

[0028] At step **404**, if the speech recognition means is unable to uniquely identify the desired brand, step **402** may be repeated in order to solicit additional identifying information from the user. For example, a user may be presented with a short list of possible brand identities from which to select; may be prompted to spell the first few characters of the brand name; may be requested to speak the name of a geographic region or a service provider; etc.; as appropriate to facilitate the identification process.

[0029] Once a brand has been successfully identified, at step **406** the user may be prompted to provide spoken appliance type and/or model number information for processing

and comparison to a phonetic database of model number data which is applicable to the identified brand if necessary, e.g., to further narrow down the codeset choices. As will be appreciated, in many manufacturer model numbering systems the appliance type may be inferred from an assigned model number, and accordingly in certain embodiments the appliance type may not be initially requested. However in instances where a model number alone may be insufficient, or in embodiments where availability of an appliance type may facilitate model number recognition processing by providing a context to limit the extent of the database search, an appliance type may comprise part of the initial request. At step **408** the spoken syllables comprising the model identity may be processed and compared to a phonetic database of model numbers by the speech recognition means which have also been cross referenced to codesets within a library of codesets. If the initially provided model information is insufficient to uniquely identify the appliance, at step **410** additional user input may be solicited. For example, a user may be requested to indicate a device type if this was not already provided; to provide geographic region or service provider; to select from a series of displayed images of appliances and/or OEM remote controls; etc. As an alternative to, or in conjunction with the above, in some embodiments a group of test codes each corresponding to a predetermined command function (for example "power") in one of several different command data formats may be downloaded into or otherwise indicated to the controlling device, to allow a user to determine by experimentation which one of a group of possible command codesets is applicable to his appliance, for example as described in the previously referenced U.S. Pat. No. 5,614,906 entitled "Method for Selecting a Remote Control Command Set."

[0030] Once a suitable command code set has been uniquely identified, at step **412** the desired setup data may be communicated to the controlling device operating program or remote control app, as appropriate for the device being configured. Depending upon the particular embodiment, communication of the setup data may comprise downloading of a complete set of command code data into the controlling device from an off-platform database of codesets located for example on local appliance such as STB **104** or on a remote server **500**; or may comprise simply communicating a set up number or other pointer to an entry in a database of command codes already preloaded into the memory of the controlling device. Thereafter, at step **414** the user may be prompted to indicate if they wish to configure additional appliances. If so, the process may be repeated starting at step **402**. If not, the current appliance configuration session is complete and the controlling device exits setup mode.

[0031] In an additional aspect of the invention, once the appliances to be controlled have been identified to a controlling device as described above or by any other convenient method, a user may be enabled to further customize individual key functionality via voice input. In this regard, since many OEM remote controls may include a large number of key functions some of which may be infrequently used or of interest only to certain classes of users, the initial setup configuration of many universal controlling devices may include only a subset of the total functionality of an appliance's OEM remote, comprising the most commonly used functions. By way of example, Tables **1***a* and **1***b* below illustrate a specific set of remote control commands which may be supported by a particular model of DVD player. Table 1a lists those commonly used commands which may be included in the default key configuration of a typical universal controlling device, while Table 1b lists additional or "extended" functions which may be unique to this particular DVD player and/or may perform seldom used operations.

TABLE 1a

DVD player standard functions		
Power on	Fast forward	Menu
Power off	Fast reverse	Up/down
Digits 0-9	Skip forward	Left/right
Play	Skip reverse	Select
Pause	Stop	Open/close

TABLE 1b

DVD player brand xxxx model yyyy extended functions		
Angle	HDMI mode	Repeat
A-B	Marker	Search
Audio	Picture adjust	Setup
Dimmer	Pure direct	Source
Disc layer	Random	Zoom

[0032] Nevertheless, a user of a universal controlling device may from time to time desire to issue appliance commands corresponding to one or more of the extended functions supported by his particular appliance model. Various methods have been proposed to enable a user to customize universal controlling device key functionality by adding available extended functions not initially available as part of the default setup. By way of example, descriptions of such methods may be found in U.S. Pat. No. 5,515,052 entitled "Universal Remote Control with Function Synthesis" or U.S. Pat. No. 7,093,003 entitled "System and Method for Upgrading the Remote Control Functionality of a Device," both of common ownership and incorporated herein by reference in their entirety.

[0033] Further, since different appliance manufacturers may use differing terminology for the same function, a generic function label used for a key on a universal controlling device may not always correspond to the term used by the original equipment manufacturer to reference that function. By way of example, Table 2 below lists some of the known synonyms for the command function which may be used to cause a device such as a TV set or STB to tune from a currently selected channel to the immediately previous channel, which function may simply be labeled with the generic term "Last" on the keypad of a universal controlling device .

TABLE 2

"Last channel" synonyms		
Alternate channel	Go back	Quick view
Back	Jump	Recall
Channel recall	Last channel	Return
Channel return	Previous channel	Revue
Flashback	Swap	R-Tune

[0034] Accordingly, in addition to facilitating the initial configuration of appliances to be controlled, in some embodiments the speech recognition capabilities described herein may be further adapted to provide a convenient and rapid method for a user of a controlling device to access specific

functions of his configured appliance via voice commands. As will become apparent, such extended function access may be for the purpose of issuing an immediate one-time command transmission, or may be for the purpose of assigning the identified command function to a key of the controlling device for future appliance operating convenience.

[0035] Turning now to the flowchart of FIG. **6**, an exemplary extended function access method may be initiated at steps **600** or **602**. As before, initiation may take the form of a key activation, menu selection, spoken input, etc., as appropriate for a particular embodiment. Initiation at step **600** may be for the purpose of issuing a one-time or immediate appliance command, while initiation at step **602** may be for the purpose of assigning an appliance command function to a key of the controlling device. Step **602** may thus include an indication of the particular controlling device key which is to reconfigured. Regardless of the purpose, at step **604** the user may be prompted to speak the desired function name. As before this prompt may take the form of an illuminated LED and/or "speak" symbol, a displayed text or image, etc., as appropriate. The resulting spoken syllables may be digitized and presented to a speech recognition means for processing and comparison to a phonetic database of command function names which have been cross referenced to command data within a codeset that is applicable to the particular appliance model currently configured, for example as illustrated in Table 1b above. As with the methods described previously, all or part of said speech recognition processing may be performed by programming on the controlling device itself; may be performed by programming on a local appliance which is in bidirectional communication with the controlling device; or may be performed by programming resident on a remote server accessible via a network such as the Internet or PSTN.

[0036] At step **604** it may be determined if the spoken input has sufficed to uniquely identify the desired command function. If not at step **608** additional information may be solicited from the user to assist in identifying the desired command function. By way of example, a user may be requested to indicate a geographic region or the approximate age of an appliance; may be presented with a display of short list of function names from which to select; may be request to provide synonym(s) for the desired command function: etc. Once the desired function has been uniquely identified, at step **610** the indicated command code data may be provisioned to the controlling device. As appropriate for the particular implementation, such provisioning may comprise downloading the data itself, supply of a pointer to an entry in a local database, etc. Thereafter, at step **612** it may be determined if the request was for a one-time command transmission (i.e., originated by step **600**) or for assignment of the function to a key (i.e., originated by step **602**). If for a one-time transmission, at step **614** the provisioned data may be utilized to transmit the desired command to the target appliance. If for assignment of the function to a key, at step **616** the new function may be assigned to the indicated key, for example using an entry in a key reassignment table such as described in U.S. Pat. No. 6,195,033 entitled "Key Mover," of common ownership and incorporated herein by reference in its entirety.

[0037] With reference to FIGS. **7***a,* the structure of an exemplary appliance command code database for use in conjunction with the methods of FIGS. **5** and **6** may comprise a series of brand records **702** each of which points to a group of model records **704** specific to that brand, each model record in turn pointing to a codeset record **706** containing command code data, function labels, etc., which are applicable to that specific brand and model of appliance. It will be appreciated that since multiple models of a manufacturer's appliance may share the same OEM remote control design and/or command code set, there may not be a one-to-one correspondence between model number records **704** and codeset records **706**.

[0038] Each brand record **702** may comprise a brand name entry comprising a text representation **710** of the brand name together with a phonetic representation **712** of that brand name comprising digitized phoneme templates, cepstral coefficients or vectors, etc., as appropriate for the speech recognition algorithms of a particular embodiment. Brand records may also include an entry **714** which may identify a geographic region, together with its phonetic representation **716**. By way of example, region information may be requested from a user if a spoken brand name is not immediately identified at step **404** of FIG. **4**, and used to filter search results when multiple possible matches were initially identified. Alternatively, in some embodiments where the database is to be used to support multiple territories, multiple entries may be created for a particular brand name in order to cater for regional differences in accent or pronunciation, in which case the region information may be used to preselect those entries which are to participate in a search. As will be appreciated, in embodiments which are Internet server based region information may be derivable from the IP address associated with the requesting device, and thus in those cases the region identification step may be performed automatically. Region information might also be automatically gathered using the GPS capabilities of a smart device, the network tower information of a network on which a smart device resides, etc. The final entry of a brand name record may take the form of a pointer **718** to a group of model number records comprising appliance models which correspond to the indicated brand.

[0039] Each model number record **704** may comprise text entries for model number **720**, appliance type **722** (e.g. DVD) and subtype **724** (e.g. Blu-ray), region **726**, and service provider (e.g. cable MSO, satellite, etc.) together with corresponding phonetic representations **730** through **736**. As before, the data contained in the device type, subtype, region, and provider entries may be utilized to refine model selection, for example as described in conjunction with step **410** of FIG. **4**. Additionally, model record **704** may also include a link **740** to an image of the appliance and/or a link **742** to an image of the original equipment remote control, again for possible use in refining a user's identification of his exact appliance model. As will be appreciated, not all of the above fields may be populated in every model record. Finally, each model number record **704** may contain a link **744** to a codeset record.

[0040] With reference to FIG. **7***b,* each code set record **706** may comprise a unique codeset identity number, a block of protocol and formatting information **752** which may describe the physical protocol requirements for transmitting the command data elements which comprise this codeset, including for example items such as carrier frequency, bit encoding, data frame size and structure, appliance address, parity or CRC requirements, etc. Following block **752** may be a series of individual command function entries **754**. Each entry may comprise a standard function ID **756**, which may be a normalized tag indicative of the function or operation invoked by this command (i.e. so that within a universal remote control system the same functionality may be mapped to a key regardless of any variations in appliance manufacturer-specific nomenclature, for example as may be seen in Table 2 above);

a function name **758** corresponding to the name by which that function is commonly referenced by this appliance's manufacturer together with its phonetic representation **760**; and command data **762** which, when transmitted using the protocol specifications of block **752**, will command the appliance to perform the indicated action. In some embodiments, multiple instances of function name **758** and associated phonetic representation **760** may be present to cater for synonyms and/or regional differences.

[0041] As will be appreciated, at step **412** of FIG. **4**, all or part of the information contained in the identified codeset record may be transferred to the controlling device being configured. As appropriate for a particular embodiment, such a transfer may comprise only the codeset number **750** where it is determined that the required codeset is already preloaded in the memory of the controlling device or a local appliance, or may comprise a full download of codeset number **750**, protocol and formatting information **752**, and all or a portion of the command data entries **762**. Furthermore, in order to identify user-requested extended command functions, the phonetic representations **758** corresponding to the command function entries of the codeset number corresponding to the currently configured appliance may be searched by the speech recognition means, for example as illustrated at steps **604** and **606** of FIG. **6**, and the matching command data returned to the requesting controlling device as illustrated **610** of FIG. **6**.

[0042] While various concepts have been described in detail, it will be appreciated by those skilled in the art that various modifications and alternatives to those concepts could be developed in light of the overall teachings of the disclosure.

[0043] Further, while described in the context of functional modules and illustrated using block diagram format, it is to be understood that, unless otherwise stated to the contrary, one or more of the described functions and/or features may be integrated in a single physical device and/or a software module, or one or more functions and/or features may be implemented in separate physical devices or software modules. It will also be appreciated that a detailed discussion of the actual implementation of each module is not necessary for an enabling understanding of the invention. Rather, the actual implementation of such modules would be well within the routine skill of an engineer, given the disclosure herein of the attributes, functionality, and inter-relationship of the various functional modules in the system. Therefore, a person skilled in the art, applying ordinary skill, will be able to practice the invention set forth in the claims without undue experimentation. It will be additionally appreciated that the particular concepts disclosed are meant to be illustrative only and not limiting as to the scope of the invention which is to be given the full breadth of the appended claims and any equivalents thereof

[0044] All patents cited within this document are hereby incorporated by reference in their entirety.

What is claimed is:

1. A method for configuring a controlling device to command functional operations of a target appliance, the method comprising:

receiving at a speech recognition engine voice data indicative of at least a brand of the target appliance whereupon the speech recognition engine uses the voice data indicative of at least a brand of the target appliance to identify within a library of codesets at least one codeset that is cross-referenced to the brand of the target appliance; and

causing the at least one codeset to be provisioned to the controlling device for use in commanding functional operations of the target appliance.

2. The method as recited in claim **1**, wherein the speech recognition engine identifies a plurality of codesets that are cross-referenced to the brand of the appliance and the method further comprises receiving at the speech recognition engine voice data indicative of at least a model of the target appliance whereupon the speech recognition engine uses the voice data indicative of at least a model of the target appliance to identify within the plurality of codesets at least one codeset that is cross-referenced to the model of the target appliance and wherein the at least one codeset that is provisioned to controlling device is the at least one codeset that is also cross-referenced to the model of the target appliance.

3. The method as recited in claim **2**, wherein the controlling device comprises a microphone for receiving voice input used in creating the voice data.

4. The method as recited in claim **3**, wherein the controlling device comprises a memory having stored therein the library of codesets.

5. The method as recited in claim **4**, wherein the controlling device comprises a processing device and instructions for providing the speech recognition engine.

6. The method as recited in claim **3**, wherein the speech recognition engine is executed on a computing device remote from the controlling device.

7. The method as recited in claim **6**, wherein the library of codesets is stored remotely from the controlling device and the at least one codeset is provisioned to the controlling device by being downloaded thereto.

8. The method as recited in claim **1**, wherein the library of codesets is stored remotely from the controlling device and the at least one codeset is provisioned to the controlling device by being downloaded thereto.

9. The method as recited in claim **1**, wherein the controlling device has a plurality of function keys activatable to cause a transmission of a command to the target appliance and wherein the method comprises receiving at the speech recognition engine voice data indicative of a command to be assigned to a function key of the controlling device whereupon the speech recognition engine uses the voice data indicative of a command to be assigned to a function key to identify within the at least one codeset command data that is cross-referenced to the command and causing the command data of the at least one codeset to be used by the controlling device in response to the function key being subsequently activated to cause a transmission of a command to the target device.

10. The method as recited in claim **1**, further comprising receiving at the speech recognition engine voice data indicative of a command to be transmitted from the controlling device whereupon the speech recognition engine uses the voice data indicative of a command to be transmitted to identify within the at least one codeset command data that is cross-referenced to the command and causing the command data of the at least one codeset to be used to transmit a command to the target appliance.

11. The method as recited in claim **1**, wherein location data is additionally utilized in the process of identifying the at least one codeset that is cross-referenced to the brand of the target appliance.

12. The method as recited in claim **2**, wherein location data is additionally utilized in the process of identifying the at least one codeset that is cross-reference to the model of the target appliance.

13. A system for configuring a controlling device to command functional operations of a target appliance, the system comprising:

a processing device having associated instructions stored on a non-transient readable media which instructions, when executed by the processing device, cause a speech recognition engine to use received voice data indicative of at least a brand of the target appliance to identify within a library of codesets at least one codeset that is cross-referenced to the brand of the target appliance and to cause the at least one codeset to be provisioned to the controlling device for use in commanding functional operations of the target appliance.

14. The system as recited in claim **13**, wherein the instructions are downloaded to the controlling device in a downloadable app.

15. The system as recited in claim **14**, wherein the controlling device comprises one of a smart phone or a tablet computing device.

16. The system as recited in claim **13**, wherein the speech recognition engine functions to identify a plurality of codesets that are cross-referenced to the brand of the appliance and the instructions further cause the speech recognition engine to use received voice data indicative of a model of the target appliance to identify within the plurality of codesets at least one codeset that is cross-referenced to a model of the target appliance whereupon the at least one codeset that is provisioned to controlling device is the at least one codeset that is also cross-referenced to the model of the target appliance.

17. The system as recited in claim **16**, wherein the controlling device comprises a memory having stored therein the library of codesets.

18. The system as recited in claim **16**, wherein the library of codesets is stored remotely from the controlling device and the at least one codeset is provisioned to the controlling device by being downloaded thereto.

19. The system as recited in claim **13**, wherein the processing device comprises one or more computing devices located remotely from the controlling device.

20. The system as recited in claim **19**, wherein the controlling device comprises a memory having stored therein the library of codesets.

21. The system as recited in claim **19**, wherein the library of codesets is stored remotely from the controlling device and the at least one codeset is provisioned to the controlling device by being downloaded thereto.

22. The system as recited in claim **13**, wherein the controlling device has a plurality of function keys activatable to cause a transmission of a command to the target appliance and wherein the instructions cause the speech recognition engine to use voice data indicative of a command to be assigned to a function key of the controlling device to identify within the at least one codeset command data that is cross-referenced to the command and to cause the command data of the at least one codeset to be used by the controlling device in response to the function key being subsequently activated to cause a transmission of a command to the target device.

23. The system as recited in claim **13**, wherein the instructions cause the speech recognition engine to use voice data indicative of a command to be transmitted from the controlling device to identify within the at least one codeset command data that is cross-referenced to the command and to cause the command data of the at least one codeset to be used to transmit a command to the target appliance.

24. The system as recited in claim **13**, wherein the instructions additionally cause location data to be considered when identifying the at least one codeset that is cross-referenced to the brand of the target appliance.

25. The system as recited in claim **16**, wherein the instructions additionally cause location data to be considered when identifying the at least one codeset that is cross-reference to the model of the target appliance.

* * * * *