DECLARATION OF MEIHUA SHI

I, Meihua Shi, pursuant to 28 U.S.C. § 1746 and 37 C.F.R. § 1.68, hereby declare as follows:

1. I am a Translator for Nelles Translations.

2. I submit this declaration to certify the accuracy of the English translation of Chinese Patent Application Publication CN 1897644A to Luo et al.

3. I am qualified to perform Chinese to English translations and certify the accuracy of Chinese to English translations.

4. My statements are based on personal knowledge and my review of Chinese Patent Application Publication CN 1897644A to Luo et al. and its Chinese to English translation. If called as a witness about the facts contained in these statements, I could testify competently based on such personal knowledge and the investigation I have conducted.

5. Attached as **Exhibit A** is a true and accurate copy of Chinese Patent Application Publication CN 1897644A to Luo et al.

6. Attached as **Exhibit B** is a true and accurate copy of an English translation of Chinese Patent Application Publication CN 1897644A to Luo et al. (hereinafter, "Luo Translation"), which I prepared based on Exhibit A and my personal knowledge of the Chinese and English languages.

7. Luo Translation is a true and accurate translation of Chinese Patent Application Publication CN 1897644A to Luo et al. from Chinese to English.

8. All statements made herein of my own knowledge are true, and all statements made on information and belief are believed to be true.

9. I have been warned and am aware that these statements are made with the knowledge that willful false statements and the like so made are punishable by fine or imprisonment, or both, under 18 U.S.C. § 1001.

10. I understand that by submitting this declaration I may be asked to appear for a deposition asking me questions limited to the material in my declaration. With my signature below, I agree to make reasonable efforts to make myself available for such a deposition at a reasonable place and time.

* * *

I declare under the penalty of perjury that the foregoing is true and correct. Executed on July 10, 2025 in New York.

Meihua Shi

Meihua Shi

EXHIBIT A

[19] 中华人民共和国国家知识产权局

[51] Int. Cl.
H04N 5/225 (2006.01)

[12] 发明专利申请公布说明书

[21] 申请号 200510081992.6

[43] 公开日 2007 年 1 月 17 日

[11] 公开号 CN 1897644A

[22] 申请日 2005.7.15
[21] 申请号 200510081992.6
[71] 申请人 摩托罗拉公司
地址 美国伊利诺斯州
[72] 发明人 罗希平 彭 刚 镇立新
[74] 专利代理机构 中原信达知识产权代理有限责任公司
代理人 黄启行 谢丽娜

权利要求书 2 页 说明书 8 页 附图 4 页

[54] 发明名称

用于捕捉图像的方法和系统

[57] 摘要

一种用于捕捉至少具有两条基本上直的边缘(205)的物体正面图像的方法系统，有助于减少图像中的射影变形。 该方法包括在相机(100)的图像传感器(115)上接收预览图像，其中该预览图像描绘了直线边缘(205)。 随后描绘了直线边缘(205)和同时存在的至少两条基准线(135)的预览图像显示在与相机系统(100)相关的预览视窗(125)中，其中每条参考线(135)对应于一条直线边缘(205)。 仅仅当预览视窗(125)中所显示的直线边缘(205)基本上平行于相应的基准线(135)时，才捕捉物体的图像。

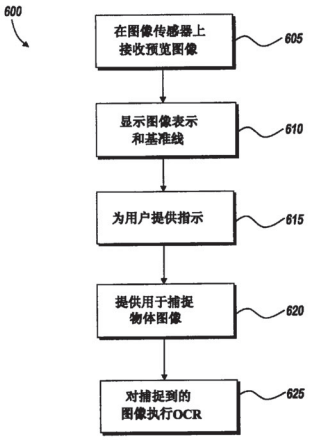

1. 一种用于捕捉至少具有两条基本上直的边缘的物体正面图像的方法，该方法包括：

在照相机的图像传感器上接收预览图像，所述预览图像描绘了直线边缘；

在与照相机相关的预览视窗中显示预览图像的表示，所述预览图像描绘了直线边缘和同时存在的至少两条基准线，其中每一条基准线对应于一条直线边缘；及

仅仅当预览视窗中所显示的直线边缘基本上平行于相应的基准线时，才提供用于捕捉物体图像。

2. 根据权利要求 1 所述的方法，其中至少有三条基准线显示在所述预览视窗中。

3. 根据权利要求 1 所述的方法，其中，当所述预览视窗中所显示的直线边缘基本上平行于相应的基准线时，自动地捕捉图像。

4. 根据权利要求 1 所述的方法，其中，仅仅当所述预览视窗中所显示的平行直线边缘基本上具有相同的长度，并且每条直线边缘基本上平行于相应的基准线时，才捕捉图像。

5. 根据权利要求 1 所述的方法，进一步包括：在捕捉物体图像前，当预览视窗中所显示的直线边缘基本上平行于相应的基准线时，为用户提供指示。

6. 根据权利要求 1 所述的方法，进一步包括对捕捉到的物体图像执行光学字符识别。

7. 根据权利要求 1 所述的方法，其中，所述基准线被永久地叠印

在所述预览视窗上。

8. 一种用于捕捉物体正面图像的照相机系统，所述物体具有至少两条基本上平行的直线边缘，该照相机系统包括：

图像传感器，适合于接收描绘了直线边缘的预览图像；及

预览视窗，可操作地连接到所述图像传感器，并且适合于显示所述预览图像的表示，所述预览图像描绘了直线边缘和同时存在的至少两条基准线，其中每条基准线对应于一条直线边缘；

其中，仅仅当所述预览视窗中所显示的直线边缘基本上平行于相应的基准线时，才能捕捉物体图像。

9. 根据权利要求 8 所述的系统，其中至少有三条基准线显示在所述预览视窗中。

10. 根据权利要求 8 所述的系统，其中，当所述预览视窗中所显示的直线边缘基本上平行于相应的基准线时，自动地捕捉图像。

11. 根据权利要求 8 所述的系统，其中，在捕捉物体图像前，当所述预览视窗中所显示的直线边缘基本上平行于相应的基准线时，为用户提供指示。

12. 根据权利要求 8 所述的系统，其中，仅仅当所述预览视窗中所显示的平行直线边缘基本上具有相同的长度，并且每一条直线边缘基本上平行于相应的基准线时，才能捕捉物体的图像。

13. 根据权利要求 11 所述的系统，其中，所述物体是名片，并且所述指示包括声音发生器、光线或显示在所述预览视窗上的指示器。

14. 根据权利要求 8 所述的系统，其中所述基准线被永久地叠印在所述预览视窗上。

用于捕捉图像的方法和系统

技术领域

本发明总体上涉及使用数码相机来捕捉图像的方法和系统。尤其（但非排他地）涉及一种捕捉例如名片等文档的图像的方法和系统。

背景技术

增强的小型化数码相机技术导致了数码相机在各种手持电子装置中广泛使用。例如，现今数码相机通常结合到移动电话、个人数字助理（PDA）以及膝上型电脑中。数码相机的这种普遍存在的可用性产生了许多新颖的用于数字图像的商业应用。例如，商业人员能够使用结合到移动电话中的数码相机来快速、便利地捕捉名片中的数字图像。然后，对名片的数字图像执行光学字符识别（OCR），并将印刷在名片上的姓名、地址及其它信息自动存储在电话的联系文件（contact file）中。

OCR 可定义为将文本图像数据转换成字符代码格式的处理过程，所述字符代码格式例如文字处理应用软件可读取的 ASCII 码。在原始的文本图像数据中，文本字符和例如图形或线条的其它类型的图像数据一样是由各个像素组成。在转换为字符代码格式后，文本字符的原始图像常常不再可用来对转换结果进行编辑和纠错。因此，为了将图像转换成特殊的字符代码，OCR 处理过程需要质量相当高的单个字符图像。

然而，现在使用数码相机的许多环境，对于捕捉高质量的图像并不理想。例如，试图捕捉名片图像的数码相机的用户只是用一只手随意地拿住名片放在相机镜头前，同时用另一只手拿住相机，然后拍照。在那种情况下，诸如镜头到名片的距离，及相机的图像平面相对于名

片正面的角度这样的可变因素是不理想的。因此，最后所得到的图像可能包含象射影变形这样的缺陷。

附图说明

为了使本发明易于理解，并有效地付诸实践，参考附图所示的示范实施例，其中在遍及各个视图中，相同的数字表示同样的或功能类似的元件。结合下面详细描述并且组成说明书一部分的附图，有助于进一步说明依据本发明的实施例并且解释依据本发明的各种原理和优点，其中：

图 1 示出了依据本发明实施例的相机系统的正面示意图。

图 2 示出了依据本发明实施例的相机系统的背面示意图。

图 3 示出了图像射影变形原理的示意图。

图 4 示出了通过相机系统的预览视窗所观察到的显著射影变形的名片图像。

图 5 是依据本发明实施例用于描绘名片预览图像的预览视窗示意图。

图 6 示出了依据本发明一个实施例的捕捉物体正面图像方法的步骤流程图，该物体具有至少两个基本上直的边缘。

熟练的技术人员应当理解到为了简单清晰地说明附图中的元件，无需按照一定比例绘图。例如，为了增进理解本发明的实施例，附图中的一些元件尺寸可以相对于其它元件放大些。

具体实施方式

在详细描述依据本发明的实施例之前，应当注意到，实施例主要在于涉及用于捕捉图像的方法和系统的方法步骤和装置的组件。因此，装置件件和方法步骤通过常用符号适当的表示在附图中，这里仅仅示出了那些和理解本发明实施例有关的具体细节，以免对于受益于这里描述的本领域普通技术人员来说是容易理解的细节使得本公开难懂。

在该文件中，相关术语如左和右、上和下等等仅用来区别一实体或动作和其他的实体或动作，无需要求或暗示这种实体或动作之间的任何实际的这种关系或次序。术语“包括”、“包含”或其任何其它的变体规定为覆盖一个非专有包括，使得包括元件列表的过程、方法、项目（article）或装置并不仅仅包括那些已述元件，而且还包括其它未特别列出的元件或这种过程、方法、项目或装置固有的元件。无需更多的约束条件，为一个元件加上前言“包含一……”并不排除在包括该元件的过程、方法、项目或装置中出现另外完全相同的元件。

参考图 1 所示，示出了依据本发明实施例的相机系统 100 的示意图。和大多数相机一样，系统 100 包括结合一正面 110 的相机外壳 105。正面 110 包括一适合于接收图像的图像传感器 115。图像传感器 115 可以包括常规的透镜和光学器件，以及数字图像传感器，例如电荷耦合装置（CCD）传感器、CMOS 传感器，等等。

参考图 2，示出了相机系统 100 的背面 120 的示意图。背面 120 包括一预览视窗 125，该预览视窗适合于显示图像传感器 115 接收到的图像表示。和许多数码相机一样，本领域的技术人员应当认识到，预览视窗 125 可充当常规相机的取景器，并且实时显示位于图像传感器 115 前的场景的任何移动图像。典型地，在预览视窗 125 中所显示的这种实时图像仅仅是瞬时的，并且只有当用户启动快门按扭（未示出）、定时器或其它图像捕捉触发机构时，该实时图像才能被捕捉到系统 100 的内存中。本发明的一个实施例进一步包括模式选择开关 130，该模式选择开关可以用来将相机系统 100 设置成各种照相模式。例如，和许多现有技术的设备一样，模式选择开关 130 可以用来将系统 100 设置成标准静态图像模式、视频模式、低光线模式、高速模式，等等。依据本发明，模式选择开关 130 还可以用来将系统 100 设置成文档捕捉模式。当模式选择开关 130 被设置成文档捕捉模式时，基准线 135 显示在预览视窗 125 中。本领域的技术人员应当认识到，模式

选择开关 130 可以是位于相机外壳 105 上的物理开关或触发按扭，或例如可以是使预览视窗 125 启动的软件开关。外壳 105 的内部还包括处理器 140，该处理器可操作地连接到图像传感器 115、预览视窗 125 以及模式选择开关 130，有助于控制那些元件之间的交互作用，并且用于处理图像数据。

依据本发明不同的实施例，基准线 135 可包括各种尺寸、形状、颜色及格式，并且可以是半透明或不透明的。在使用基准线 135 期间，基准线 135 用来指导系统 100 的用户使图像传感器 115 位于相对于例如名片物体的适当方位上。因此，在使用基准线 135 定位期间，基准线 135 通常相对于预览视窗 125 固定。依据本发明的另一个实施例，基准线 135 可以被印刷在预览视窗 125 上，或以别的方式永久地叠印在预览视窗 125 上。

如图 2 所示，在实施本发明一个实施例的操作期间，用户常常通过如下确定基准线 135 的位置来试图确定文档的框架：使基准线 135 基本上平行的紧邻预览视窗 125 中所显示的文档表示的直线边缘 205 或基本上平行的位于直线边缘 205 之上。在这样的定位中，系统 100 被设计来捕捉良好聚焦并且清晰的文档图像，该系统具有适当的分辨率，以使得印刷在文档上的任何文本的光学字符识别有效并且可靠。

参考图 3，示出了图像射影变形原理的示意图，如本领域技术人员所了解的。所示的光线 305 通过透镜 315 从物体平面 310 传播到图像平面 320 上。至于本发明，物体平面 310 相当于将要映像的物体表面，例如名片的表面，透镜 315 相当于相机系统 100 的图像传感器 115 的元件，图像平面 320 相当于接收到的图像，例如在系统 100 的预览视窗 125 中所显示的预览图像。在物体平面 310 和图像平面 320 不能达到基本平行的情况下，透镜 315 使得印刷在物体平面 310 上的图像描绘按照已知的射影变形方式在图像平面 320 上发生变形。例如，在物体平面上的区域“P”的形状可以通过透镜 315 放大，并且通过射

影变形扭曲成图像平面上不同形状的区域“Q”。

参考图 4，示出了通过相机系统 100 的预览视窗 125 所观察到的显著射影变形的名片图像。尽管名片左侧上的印刷文本保持清晰并且易读，但由于名片的表面倾斜于系统 100 的图像平面 320，因此显示出的名片右侧上的印刷文本是模糊的并且不易读取。正如本领域技术人员所知的，相机系统 100 的有限景深和射影变形使得图像右侧变得模糊不清。

本发明能够通过确保被映像的物体的正面基本上平行于相机系统 100 的图像平面 320 来减少图像的射影变形。例如，当系统 100 处于文档捕捉模式时，仅仅当名片的直线边缘 205 基本上平行于预览视窗 125 中所显示的相应的基准线 135 时，系统 100 才为用户提供捕捉物体的图像，例如名片。

参考图 5，是依据本发明具体实施例用于描绘名片预览图像的预览视窗 125 的示意图。为了达到说明的目的，所示名片倾斜于系统 100 的图像平面 320，使得卡片的顶部直线边缘 205 不能达到基本平行于相应的顶部基准线 135。在这样的定位中，当系统 100 在上述文档捕捉模式中操作时，系统 100 显示出物体平面 310 和图像平面 320 达不到基本平行，因此不能捕捉到最终的名片图像。正如本领域中众所周知的，可使用图像边缘检测技术来可靠地计算出具体的基准线 135 和文档预览图像中相应的直线边缘 205 之间的角度。在图 5 中，示出了 3 条基准线 135；然而，根据本发明公开的内容，本领域技术人员应当认识到，依据本发明不同的实施例可以使用不同数量的基准线 135，例如二条、三条、四条或更多的基准线 135。此外，所有的基准线 135 不必是直交的。因此，例如相机系统 100 可以使用三角形排列的三条基准线 135 来校准三角形状的文档。

可以使用各种技术来向用户指示适当数量的基准线 135 基本上平

行于预览视窗 125 中所描绘的物体的相应直线边缘 205。例如，可以提供由声音组成的警报，象从相机系统 100 输出的哔哔声。同样，还可以是在预览视窗 125 上照亮的光线或在相机系统 100 其它别的地方上照亮的光线。此外，图象指示器可以显示在预览视窗 125 上，例如，其中当每一条基准线 135 基本上平行于相应的直线边缘 205 时，该基准线 135 可以单独地改变颜色或闪烁。作为替换，当预览视窗 125 上所显示的直线边缘 205 基本上平行于相应的基准线 135 时，系统 100 能够自动捕捉所选择的图像，为用户提供或不提供指示。

依据本发明的另一个实施例，可使用附加的几何校准技术来测量物体平面 310 是否和图像平面 320 对齐。例如，依据本领域技术人员已知的标准图像分析技术来测量在预览视窗 125 中所描绘的不同直线边缘 205 的长度。基于“没影点（vanishing point）”的效应，当边 205 之一离图像传感器 115 更远时，按照二维图像的显示，矩形文档的两条相对平行的直线边缘 205 具有不同的长度。因而在图 5 中，离相机系统 100 较远的名片右侧的垂直直线边缘 205 比名片左侧的垂直直线边缘 205 短。因此，在本发明的实施例中增加了额外的灵敏度，其中仅仅当预览视窗 125 中所显示的物体的两平行直线边缘 205 基本上具有相同的长度并且基本上与相应的基准线 135 平行时，才可以捕捉到图像。

本领域技术人员应当认识到，小型化数码相机技术使得相机外壳 105、图像传感器 115 及预览视窗 125 几乎可以是任意尺寸的，因而本发明的实施例可以结合到各种电子装置中，例如移动电话、个人数字助理及膝上型电脑。此外，基准线 135 可以被设计成与不同类型物体的直线边缘 205 一致。例如这种物体可以包括矩形、三角形或其它形状的纸件，如名片，或其它具有直线边缘 205 和一表面的物体，其中将该表面定位在平行于相机系统 100 的图像平面 320 的方向上有助于减少射影变形。

参考图 6，示出了依据本发明一个实施例的捕捉物体正面图像方法的步骤流程图，该物体具有至少两个基本上直的边缘 205。首先，在步骤 605，系统 100 的图像传感器 115 接收预览图像。预览图像描绘了物体的直线边缘 205。如上所述，该预览图像通常是瞬时图像，用于适当地确定或校准相机系统 100 相对于物体平面的方向。接下来，在步骤 610，显示出预览图像表示，其描绘了与相机系统 100 相关的预览视窗 125 中的直线边缘 205 和同时存在的至少两条基准线 135，其中每一条基准线 135 对应于一条直线边缘 205。依据本发明的一个实施例，在用户选择一种文档捕捉模式之后，基准线 135 才显示在相机系统 100 中；作为替换，基准线可以被永久地叠印到预览视窗 125 上。接下来，在步骤 615，当预览视窗 125 中所显示的直线边缘 205 基本上与相应的基准线 135 平行时，为用户提供一个指示。在步骤 620，仅仅当预览视窗 125 中所显示的直线边缘 205 基本上与相应的基准线 135 平行时，才提供用于捕捉物体图像。最后，在步骤 625，对捕捉到的物体图像执行光学字符识别。

方法 600 中的步骤 625 可以使用存储在相机系统 100 中的软件来执行，或作为替换在远程位置执行步骤 625。例如，相机系统 100 可以仅用来捕捉精确、清晰的文本数据图像，在执行任何光学字符识别之前，可将该图像下载到另一个位置。

总之，本发明是用于捕捉至少具有两条基本上直的边缘 205 的物体正面图像的改进方法和系统。本发明的实施例采用象模式选择开关 130 和预览视窗 125 这种相机系统 100 常见的特征使得用户在使用中友好并且直观。因而本发明有助于用户精确、可靠地捕捉物体正面的图像，其中物体平面 310 基本上平行于图像平面 320。因此，减少了图像中的射影变形，使图像更加清楚、精确。在减少射影变形的情况下，更有可能高精确度地执行加速图像捕捉处理过程，例如对文本图像所执行的光学字符识别处理过程。

上面的详细描述仅仅提供了示范实施例，并不意味着限制本发明的范围、适用性或构造。相反地，示范实施例的详细描述为本领域的技术人员提供了用于实施本发明示范实施例的可执行描述。应该理解，在不脱离所附权利要求所阐述的本发明的精神和范围内，能够作出对元件的功能和配置及步骤进行的各种变化。应当理解这里所描述的实施例可由一个或多个常规处理器和控制一个或多个处理器运行的唯一存储的程序指令组成，结合特定的非处理器电路，这里所描述的用于捕捉物体正面图像的一些、大多数或所有功能。该非处理器电路可以包括（但不限于）无线电接收机，无线电发射机，信号驱动器，时钟脉冲电路，电源电路，以及用户输入设备。同样地，这些功能可以被解释为执行捕获物体正面图像方法的步骤。作为替换，一些或全部的功能可以通过不具有存储程序指令的状态机来实现，或在一个或多个特定用途集成电路（ASIC）中实现，其中每一项功能或某些特定功能的结合作为常规逻辑电路来实现。当然，也可以结合两种方法来使用。因而，这里描述了执行这些功能的方法和装置。此外，希望普通技术人员在这里所公开的原理和原则的指导下，使用最小限度的实验就能够容易地生成这类软件指令和程序以及 IC，尽管可能付出巨大努力，以及基于如可利用的时间、当前技术和经济上的考虑激发出多种设计选择。

在前述的说明中，描述了本发明的具体实施例。然而，本领域的普通技术人员应当理解，在不脱离如权利要求所阐述的本发明范围内，对本发明可作出各种修改和变化。因此，说明书及附图应当认为是对本发明的解释而非限定，以及所有这样的修改都意味着包括在本发明的范围内。该利益、优点、问题的解决方法以及可产生任何利益、优点、或发生或变得更为显著的解决方法的任意成份，都不能解释为任一或全部权利要求的重要、必需或基本的特征或成份。本发明由所附权利要求单独定义，在该申请未决期间所作出的任何修改以及那些权利要求的所有等价物都包含在其内。

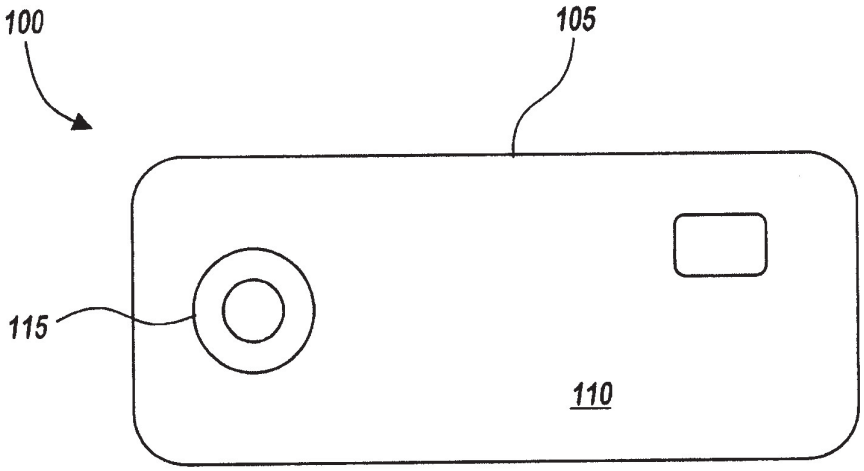

图1

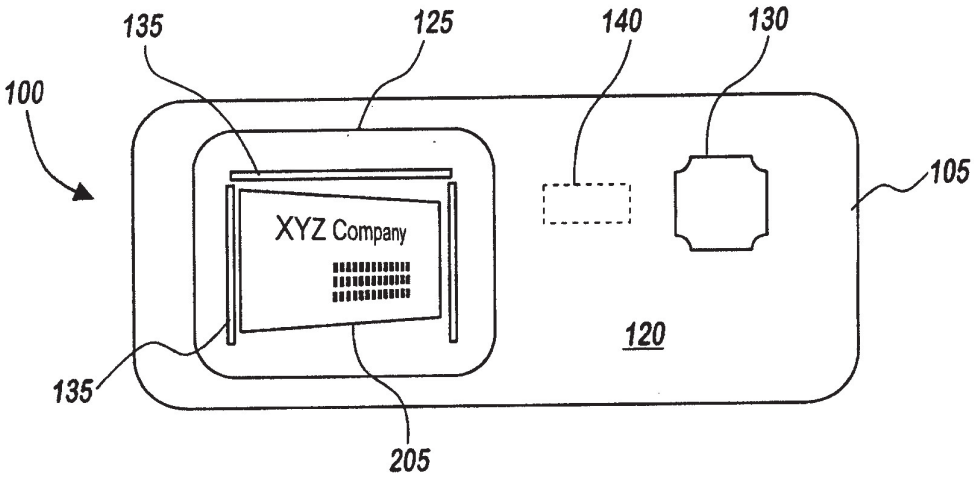

图2

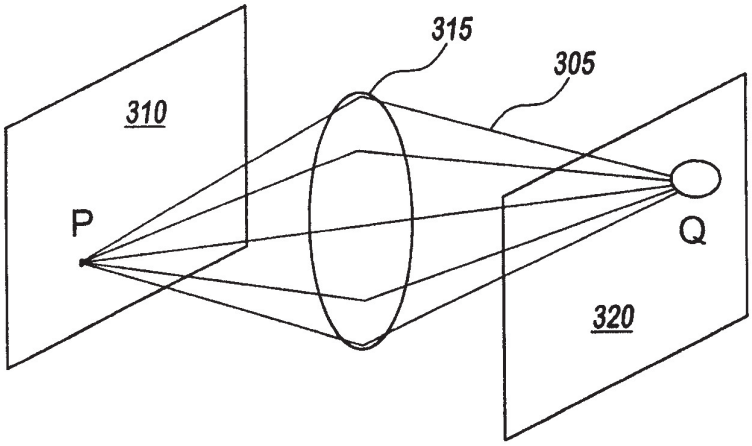

图3

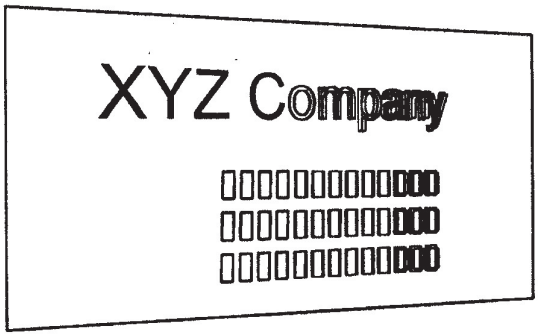

图4

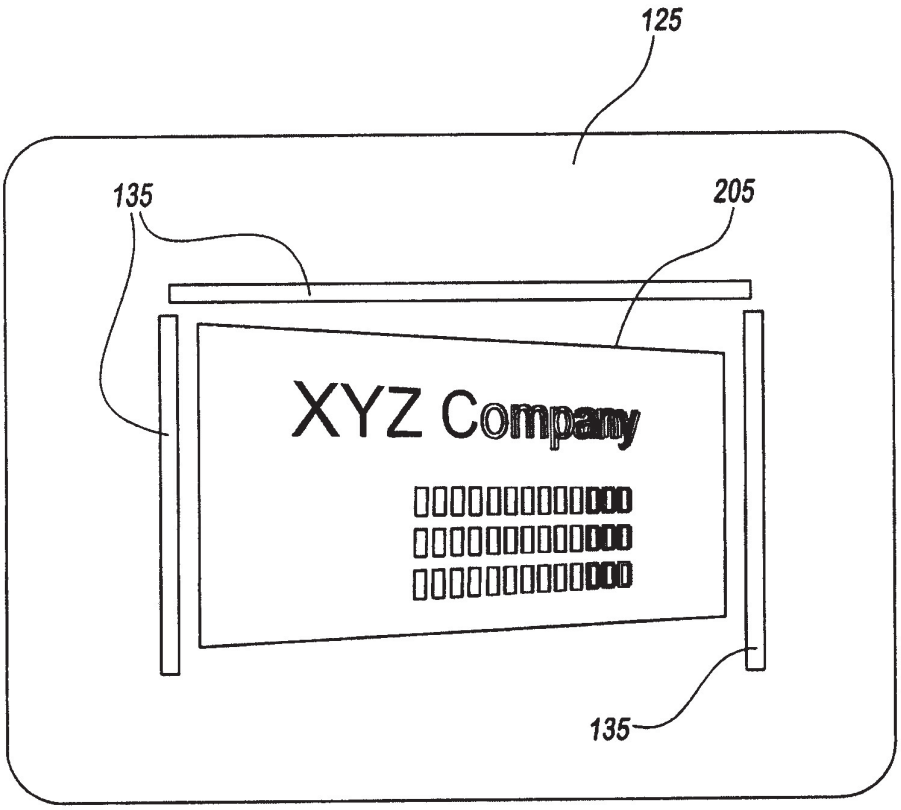

图5

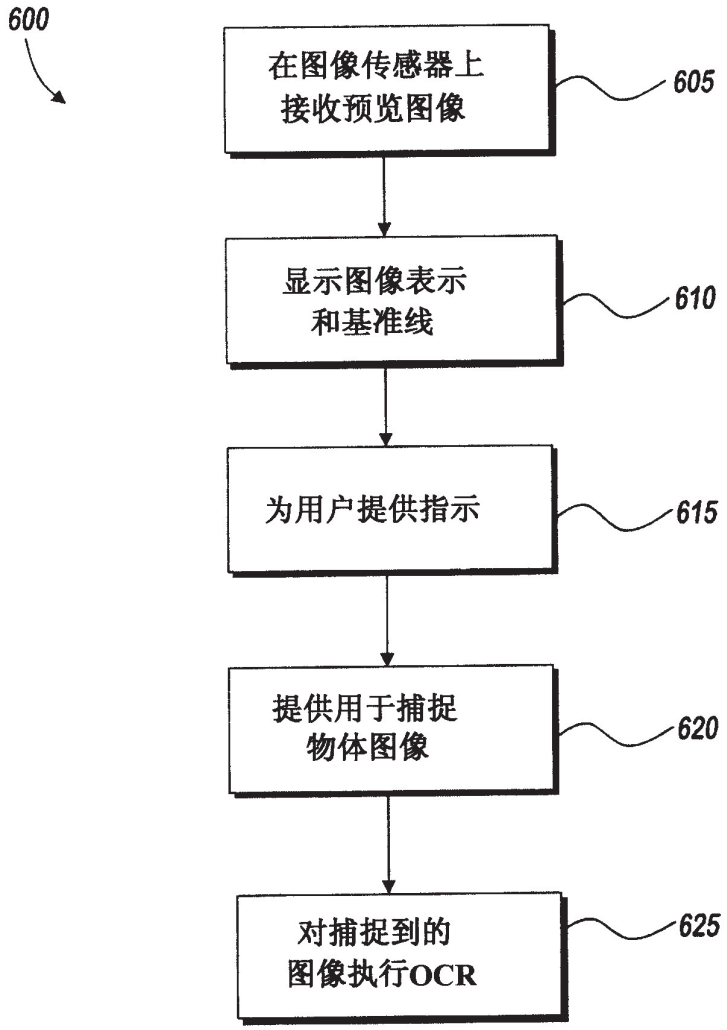
600
在图像传感器上
接收预览图像
605
显示图像表示
和基准线
610
为用户提供指示
615
提供用于捕捉
物体图像
620
对捕捉到的
图像执行OCR
625

图6

EXHIBIT B

[19] State Intellectual Property Office of People's Republic of China

[51] Int.Cl
H04N 5/225 (Jan. 2006)

[12] Public Explanation for Invention and Patent Application

[21] Application No. 200510081992.6

[43] Application Publication Date: Jan. 17, 2007

[11] Publication No.: CN 1897644A

[22] Application Date: July 15, 2005

[74] Patent agency: China Sinda Intellectual Property Agency Co., Ltd.

[21] Application No.: 200510081992.6

Agents: Huang Qixing and Xie Lina

[71] Applicant: Motorola Corporation

Address: State of Illinois, the United States of America

[72] Inventors: Luo Xiping, Peng Gang and Zhen Lixin

Claims 2 page, Description 8 pages, Attached Diagrams 4 pages

[54] Name of Invention

A method and system for capturing images

[57] Abstract

A method and system for capturing the frontal image of an object having at least two substantially straight edges (205), which helps reduce projective distortion in the image. The method includes receiving a preview image on an image sensor (115) related to a camera (100), and the preview image depicts a straight edge (205). Then, a preview image depicting a straight edge (205) and at least two reference lines (135) simultaneously present is displayed in a preview window (125) of the camera system (100), where each reference line (135) corresponds to a straight edge (205). The image of the object is captured only when the straight edge (205) shown in the preview window (125) is substantially parallel to the corresponding reference line (135).

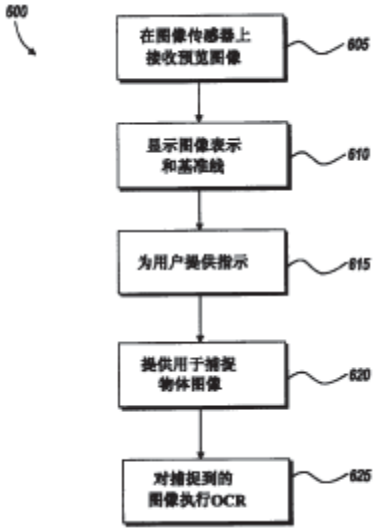

Receives a preview image on an image sensor -> Shows the image representation and the reference line -> Provides instructions to users -> Is provided to captures the image of an object -> Perform OCR to the image captured

1. A method for capturing a frontal image of an object having at least two substantially straight edges, which is comprised of:

Receives a preview image on an image sensor of the camera, and the preview image depicts a straight edge;

Displays a representation of a preview image in a preview window related to the camera and the preview image depicts a straight edge and at least two coexisting reference lines, each of which corresponds to one straight edge; and

Only when the straight edge displayed in the preview window is substantially parallel to the corresponding reference line is it provided to capture the image of the object.

2. The method as described in Claim 1, wherein at least three reference lines are displayed in the preview window.

3. The method as described in Claim 1, wherein the image is automatically captured when the straight edge displayed in the preview window is substantially parallel to the corresponding reference line.

4. The method as described in Claim 1, wherein image capturing is performed only when the parallel straight edge displayed in the preview window is substantially in the same length, and each straight edge is substantially parallel to the corresponding reference line.

5. The method as described in Claim 1 is further comprised of: it provides instructions to the user when the straight edge displayed in the preview window is substantially parallel to the corresponding reference line before capturing the image of the object.

6. The method as described in Claim 1 is further comprised of performing optical character recognition on the captured object image.

7. The method as described in Claim 1, wherein the reference line is permanently overprinted on the preview window.

8. A camera system for capturing a frontal image of an object, and said object having at least two substantially parallel straight edges, the camera system comprising:

An image sensor that is adapted to receive a preview image depicting a straight edge; and

A preview window that is operatively connected to the image sensor and adapted to display the representation of a preview image, while the preview image depicts a straight edge and at least two reference lines that exist simultaneously, where each reference line corresponds to one straight edge;

Among them, an object image can be captured only when a straight edge displayed in the preview window is substantially parallel to a corresponding reference line.

9. The system as described in Claim 8, wherein at least three reference lines are displayed in the preview window.

10. The system as described in Claim 8, wherein an image is automatically captured when a straight edge displayed in the preview window is substantially parallel to a corresponding reference line.

11. The system as described in Claim 8, wherein the instruction is provided to a user when a straight edge displayed in the preview window is substantially parallel to a corresponding reference line before capturing an object image.

12. The system as described in Claim 8, wherein the object image capturing can be performed only when the parallel straight edges displayed in the preview window are substantially in the same length, and each straight edge is substantially parallel to the corresponding reference line.

13. The system as described in Claim 11, wherein the object is a business card, and the instructions comprise of a sound generator, light, or an indicator displayed on the preview window.

14. The system as described in Claim 8, wherein the reference line is permanently overprinted on the preview window.

A Method and System for Capturing Images

Field of the Invention

The present invention relates generally to a method and system for capturing images using a digital camera, especially (but not exclusively) a method and system for capturing images of documents such as business cards.

Background of the Invention

Enhanced and miniaturized digital camera technology has led to the widespread use of digital cameras in a variety of handheld electronic devices. For example, today's digital cameras are often integrated into mobile phones, personal digital assistants (PDAs), and laptops. This ubiquitous availability of digital cameras has produced many novel commercial applications for digital images. For example, people in business can use digital cameras incorporated into mobile phones to quickly and easily capture digital images of their business cards. Then, they can perform optical character recognition (OCR) on the digital images, and save the name, address, and other information printed on the business cards automatically in the contact file of their phones.

OCR can be defined as a process of converting data in a text image into a character code format, such as an ASC II code that is readable by a word processing application software. The text characters in the data of the original text image are composed of individual pixels as other types of image data such as graphics or lines. After conversion to character code format, the original images of text characters are often no longer available for editing and error correction of the conversion results. Therefore, in order to convert an image into a special character code, the OCR process requires images of single characters in relatively high quality.

However, many environments today for using digital cameras are not ideal for capturing high-quality images. For example, a user of a digital camera trying to capture a business card image simply holds the business card in front of the camera lens with one hand, while holding the camera with the other hand when taking pictures. But this makes unideal variable factors such as the distance from the lens to the business card, and the angle of the camera's image plane relative to the front of the business card. Therefore, the image resulted may contain defects such as projective distortion.

Brief Description of the Drawings

In order to make the present invention easy to understand and effectively put into practice, reference is made to the exemplary embodiments shown in the accompanying drawings, in which like numbers represent the same or functionally similar elements throughout the various views. The accompanying drawings, which are described in detail below and constitute a part of the specification, help to further explain embodiments and describe various principles and advantages based on the present invention, in which:

FIG. 1 shows a schematic front view of a camera system according to an embodiment of the present invention.

FIG. 2 shows a schematic rear view of a camera system according to an embodiment of the present invention.

FIG. 3 is a schematic view showing the principle of image projective deformation.

FIG. 4 shows the image of a business card with a significant projective distortion observed through the preview window of the camera system.

FIG. 5 is a schematic view of a preview window to depict a preview image of a business card according to an embodiment of the present invention.

FIG. 6 shows steps of a method for capturing a front image of an object according to an embodiment of the present invention, and the object has at least two substantially straight edges.

The skilled technicians should understand that in order to explain the elements in the drawings simply and clearly, the drawings need not be drawn to a certain scale. For example, in order to improve the understanding of the embodiments of the present invention, the dimensions of some elements in the drawings may be enlarged relative to other elements.

Detailed Implementation

Before describing the embodiments for the present invention in detail, it should be noted that the embodiments mainly involve the steps and components of the method and system for capturing images. Therefore, the fittings and steps are appropriately represented in the drawings by common symbols. Here, only specific details critical to understanding the embodiments of the present invention are shown, while details that are easily understood by technicians skilled in the art described here are omitted in order to make this disclosure easier to understand.

In this document, related terms such as left and right, up and down, etc. are only used to distinguish one object or action from other objects or actions, without requiring or implying any actual such relationship or order between such objects or actions. The term "comprising", "containing" or any other variation thereof is intended to cover a non-exclusive inclusion such that a process, method, article, or device that comprise of a list of elements is not restricted to only the elements described, but can also include other elements not specifically listed or elements inherent to such a process, method, article, or device. With no more constraints, prefixing "comprising a ..." to an element does not exclude other identical element(s) in the process, method, project, or device that comprises of such element.

FIG. 1 shows a schematic diagram of a camera system 100 based on an embodiment of the present invention. Like most cameras, the system 100 includes a camera housing 105 incorporating a front side 110. The front side 110 contains an image sensor 115 adapted to receive an image. The image sensor 115 may contain conventional lenses and optics, as well as digital image sensors, such as a charge coupled device (CCD) sensor, a CMOS sensor, and so on.

FIG. 2 shows a schematic diagram of the back 120 of the camera system 100. The back 120 contains a preview window 125, which is suitable for displaying the image received by the image sensor 115. As with many digital cameras, those skilled in the art should recognize that the preview window 125 can function as a viewfinder of a conventional camera and display in real time any moving image of the scene in front of the image sensor 115. Typically, such a real-time image displayed in the preview window 125 is only transient, and it is captured into system 100's memory only when the user activates a shutter button (not shown), a timer, or other image capture trigger mechanism. An embodiment of the present invention further contains a mode selection switch 130, which can be used to set the camera system 100 to various photographing modes. For example, like many prior art devices, the mode selection switch 130 can be used to set the system 100 to a standard still image mode, video mode, low-light mode, high-speed mode, and so on. According to the present invention, the mode selection switch 130 can also be used to set the system 100 to a document capture mode. When the mode selection switch 130 is set to the document capture mode, the reference line 135 is displayed in the preview window 125. Those skilled in the art should recognize that the mode selection switch 130 may be a physical switch or trigger button on the camera housing 105, or may be, for example, a software switch that enables the preview window 125 to be activated. In the housing 105 there is also a processor 140 which is operatively connected to the image sensor 115, the preview window 125, and the mode selection switch 130, helping to control the interaction between those components and process the image data.

According to different embodiments of the present invention, the reference line 135 may be in various sizes, shapes, colors, and formats, and may be translucent or opaque. The reference line 135 is used to guide the user of the system 100 to position the image sensor 115 in an appropriate orientation with respect to, for example, a business card object. Therefore, when using the reference line 135 for positioning, it is usually fixed relative to the thousand preview window 125. According to another embodiment of the present invention, the reference line 135 may be printed on the preview window 125 or may be permanently superimposed on the preview window 125 in another way.

As shown in FIG. 2, when implementing an embodiment of the present invention, the user often attempts to determine the frame of the document by determining the position of the reference line 135 as follows: the reference line 135 is made substantially parallel and adjacent to the straight edge 205 represented by the document displayed in the display window 125 or substantially parallel to and above the straight edge 205. In such positioning, the system 100 is designed to capture well-focused and clear document images, with an appropriate resolution to make the optical character recognition of any text printed in the document effective and reliable.

FIG. 3 shows a schematic diagram of the principle of image projective deformation, as understood by those skilled in the art. The illustrated light 305 propagates through the lens 315 from the object plane 310 onto the image plane 320. With respect to the present invention, the object plane 310 is equivalent to the surface of the object to be imaged, such as the surface of a business card, while the lens 315 is equivalent to the component of the image sensor 115 of the camera system 100, and the image plane 320 is equivalent to the received image, such as in the preview image displayed in window 125 of the system 100. In a case where the object plane 310 and the image plane 320 cannot be substantially parallel, the lens 315 causes the image printed on the object plane 310 to be deformed on the image plane 320 according to a known projective deformation method. For example, the shape in the region "p" on the object plane can be enlarged by the lens 315 and distorted into a region "Q" of a different shape on the image plane by projective deformation.

FIG. 4 shows a business card image with significant projective distortion observed through the preview window 125 of the camera system 100. Although the printed text on the left side of the business card remains clear and easy to read, the printed text on the right side of the displayed business card is blurred and difficult to read because the surface of the business card is tilted in relative to the image plane 320 of the system 100. As known to those skilled in the art, the limited depth of field and projective distortion of the camera system 100 make the right side of the image blurry.

The present invention ensures that the front of the object being imaged is substantially parallel to the image plane 320 of the camera system 100 to reduce the projective distortion of the image. For example, when the system 100 is in the document capture mode, the system 100 provides the user with an image of a captured object, such as a business card, only when the straight edge 205 of the business card is substantially parallel to the corresponding reference line 135 displayed in the preview window 125.

FIG. 5 is a schematic diagram of a preview window 125 for drawing a preview image of a business card according to a specific embodiment of the present invention. For the purpose of illustration, the image plane 320 of the business card shown is tilted in relative to system 100 so that the top straight edge 205 of the card cannot be substantially parallel to the corresponding top reference line 135. In such positioning, when the system 100 operates in the document capture mode as described above, the system 100 displays that the object plane 310 and the image plane 320 are not substantially parallel, so the final business card image cannot be captured. As is well known in the art, image edge detection techniques can be used to reliably calculate the angle between a specific reference line 135 and the corresponding straight edge 205 in the document preview image. In FIG. 5, three reference lines 135 are shown; however, according to the disclosure of the present invention, those skilled in the art should recognize that different numbers of reference lines 135 may be used according to different embodiments of the present invention, such as two, three, four or more baselines 135. In addition, all baselines 135 need not be orthogonal. Therefore, for example, the camera system 100 may use three reference lines 135 shaped in a triangle to calibrate a triangle-shaped document.

Various techniques may be used to indicate to the user that an appropriate number of reference lines 135 are substantially parallel to the respective straight edges 205 of the object depicted in the preview window 125. For example, an alarm composed of sounds, such as a clicking sound output from the camera system 100, may be provided. In the same way, it may be the light illuminated in the preview window 125 or the light illuminated elsewhere in the camera system 100. In addition, an image indicator may be displayed on the preview window 125, for example, when each reference line 135 is substantially parallel to a corresponding straight edge 205, the reference line 135 may change color or flicker individually. As an alternative, when the straight edge 205 displayed on the preview window 125 is substantially parallel to the corresponding reference line 135, the system 100 can automatically capture the selected image and provide the user with or without instructions.

According to another embodiment of the present invention, additional geometric calibration techniques may be used to measure whether the object plane 310 is aligned with the image plane 320. For example, the lengths of the different straight edges 205 depicted in the preview window 125 can be measured using standard image analysis techniques known to those skilled in the art. Based on the "vanishing point" effect, when one of the edges 205 is further away from the image sensor 115, the two relatively parallel straight edges 205 of the rectangular document have different lengths based on the display of the two-dimensional image. Therefore, in FIG. 5, the vertical straight edge 205 on the right side of the business card, which is farther from the camera system 100, is shorter than the vertical straight edge 205 on the left side of the business card. Therefore, additional sensitivity is added to the embodiment of the present invention, wherein only when two parallel straight edges 205 of the object displayed in the preview window 125 have substantially the same length and are substantially parallel to the corresponding reference line 135 can the image be captured.

Those skilled in the art should realize that the miniaturized digital camera technology enables the camera housing 105, the image sensor 115, and the preview window 125 to be almost any size, so the embodiments of the present invention can be incorporated into various electronic devices, such as mobile phones, personal digital assistants, and laptops. In addition, the reference line 135 may be designed to coincide with the straight edge 205 of different types of objects. For example, such objects may be rectangular, triangular, or other shaped pieces of paper, such as business cards, or other objects having straight edges 205 and a surface, where the surface is positioned parallel to the image plane 320 of the camera system 100, which helps reduce projective distortion.

FIG. 6 shows a flowchart of steps in a method for capturing a frontal image of an object according to an embodiment of the present invention, and the object has at least two substantially straight edges 205. First, in step 605, the image sensor 115 of the system 100 receives a preview image. The preview image depicts a straight edge 205 of the object. As described above, the preview image is usually an instantaneous image for appropriately determining or calibrating the direction of the camera system 100 relative to the object plane. Next, in step 610, a preview image representation is displayed, which depicts a straight edge 205 in the preview window 125 related to the camera system 100 and at least two reference lines 135, each of which corresponds to one straight edge 205. According to an embodiment of the present invention, the reference line 135 is displayed in the camera system 100 only after the user selects the document capture mode; as an alternative, the reference line may be permanently superimposed on the preview window 125. Next, in step 615, when the straight edge 205 displayed in the preview window 125 is substantially parallel to the corresponding reference line 135, an indication is provided to the user. In step 620, only when the straight edge 205 shown in the preview window 125 is substantially parallel to the corresponding reference line 135 can the image of the object be captured. Finally, in step 625, optical character recognition is performed on the captured object image.

Step 625 in method 600 may be performed using software stored in camera system 100, or alternatively, step 625 may be performed at a remote location. For example, the camera system 100 can be used to capture only precise, clear text data images, which can be downloaded to another location before any optical character recognition is performed.

In summary, the present invention is an improved method and system for capturing the frontal image of an object having at least two substantially straight edges 205. Embodiments of the present invention employ common features of the camera system 100 such as the mode selection switch 130 and the preview window 125 to make it user friendly and intuitive in use. Therefore, the present invention helps users to accurately and reliably capture an image of the front of an object, where the object plane 310 is substantially parallel to the image plane 320. Therefore, the projective distortion in the image is reduced, and the image is clearer and more accurate. With reduced projective distortion, it is more likely to perform an accelerated image capture process, such as an optical character recognition process performed on a text image, with high accuracy.

The above detailed description merely provides exemplary embodiments, and is not meant to limit the scope, applicability, or configuration of the invention. Rather, the detailed description of the exemplary embodiments provides those skilled in the art with an executable description for implementing the exemplary embodiments of the invention. It should be understood that various changes can be made in the function and arrangement of elements and steps without departing from the spirit and scope of the invention as set forth in the appended claims. It should also be understood that the embodiments described herein may consist of one or more conventional processors and uniquely stored program instructions that control the operation of one or more processors, as well as some, most, or all of the features for capturing the front of an object in combination with specific non-processor circuits. The non-processor circuit may include, but is not limited to, a radio receiver, a radio transmitter, a signal driver, a clock circuit, a power circuit, and a user input device. As such, these functions can be interpreted as steps of a method for capturing a frontal image of an object. Alternatively, some or all of the functions may be implemented by a state machine without stored program instructions or realized in one or more application-specific integrated circuits (ASICs), each of which or a combination of certain functions are implemented by conventional logic circuits. Of course, these two methods can be combined in use. Thus, methods and apparatus are described herein to perform these functions. In addition, it is hoped that technicians will be able to easily generate such software instructions and programs and ICs with minimal experimentation under the guidance of the principles and principles disclosed herein, although it may take a lot of effort, and based on considerations such as time and current technology available and economic considerations, a number of design choices can be inspired.

Embodiments of the present invention have been described in the foregoing description. However, those skilled in the art shall understand that various modifications and changes can be made to the present invention without departing from the scope of the invention as set forth in the claims. Therefore, the description and drawings should be regarded as an explanation rather than a limitation of the present invention, and all such modifications are intended to be included in the scope of the present invention. The benefits, advantages, solutions to problems, and any component that produces any benefits or advantages, or solutions generating more significance or becoming more significant, should not be construed as an important, required, or essential feature or component of any or all claims. The invention is defined solely by the appended claims, and contains any modifications made during the pendency of this application and all equivalents of those claims.

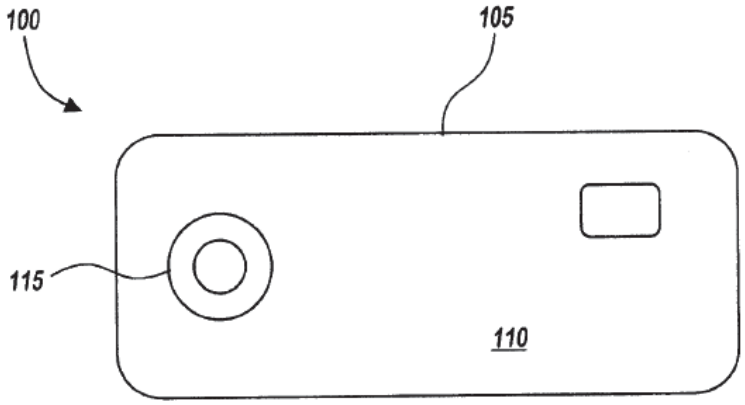

Fig.1

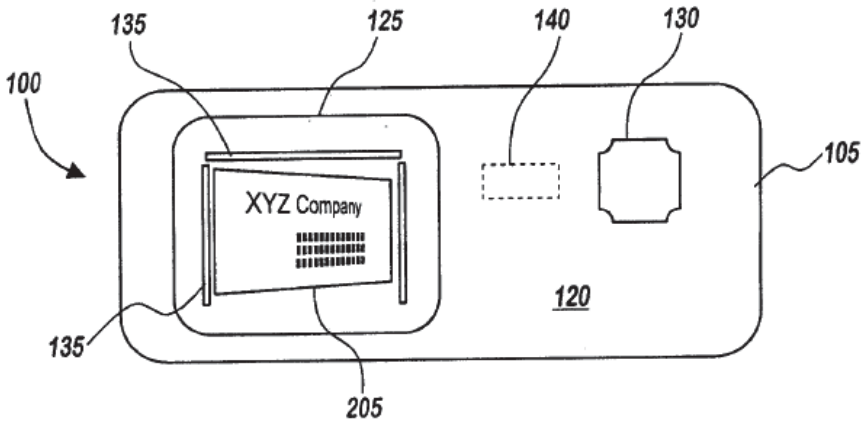

Fig. 2

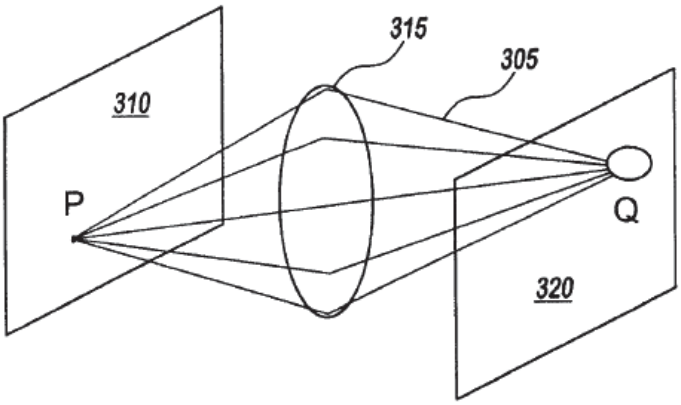

Fig. 3

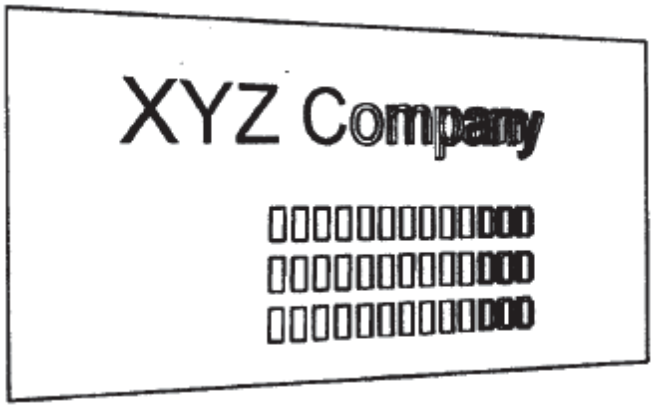

Fig. 4

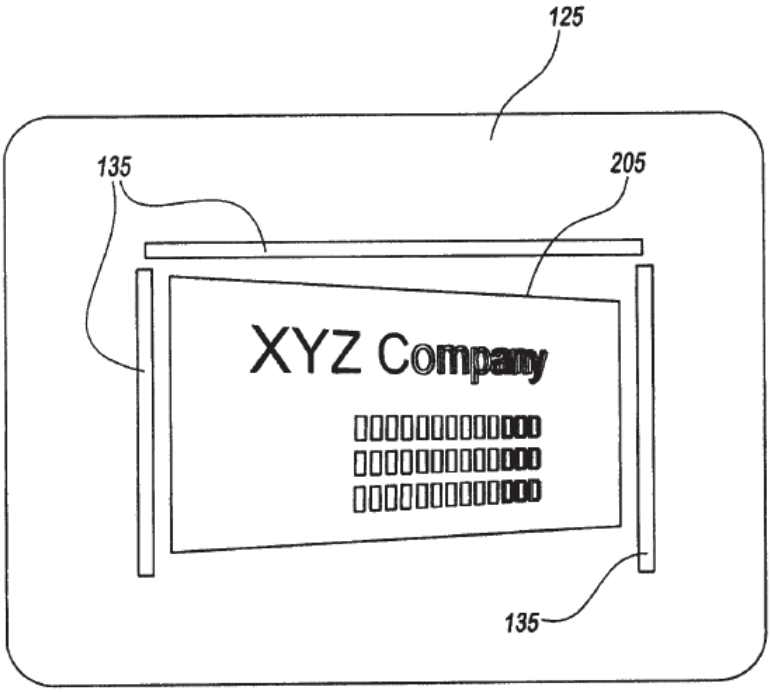

Fig. 5

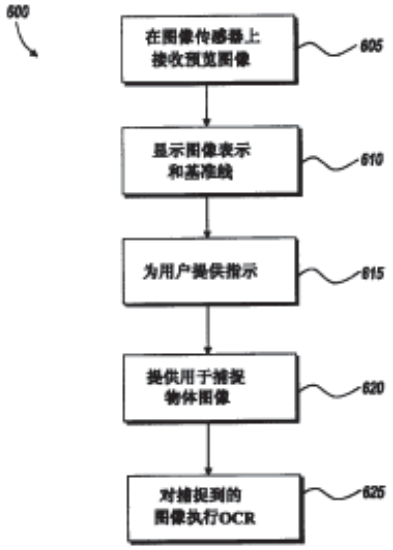

Fig. 6

Receives a preview image on an image sensor -> Shows the image representation and the reference line -> Provides instructions to users -> Is provided to captures the image of an object -> Perform OCR to the image captured