US007831926B2

(12) **United States Patent**
Rohrabaugh et al.

(10) **Patent No.: US 7,831,926 B2**
(45) **Date of Patent: *Nov. 9, 2010**

(54) **SCALABLE DISPLAY OF INTERNET CONTENT ON MOBILE DEVICES**

(75) Inventors: **Gary B. Rohrabaugh**, Bellingham, WA (US); **Scott A. Sherman**, Seattle, WA (US)

(73) Assignee: **SoftView LLC**, Bellingham, WA (US)

(*) Notice: Subject to any disclaimer, the term of this patent is extended or adjusted under 35 U.S.C. 154(b) by 799 days.

This patent is subject to a terminal disclaimer.

(21) Appl. No.: **11/738,486**

(22) Filed: **Apr. 21, 2007**

(65) **Prior Publication Data**

US 2007/0288841 A1 Dec. 13, 2007

Related U.S. Application Data

(63) Continuation of application No. 09/878,097, filed on Jun. 8, 2001, now Pat. No. 7,210,099, which is a continuation-in-part of application No. 09/828,511, filed on Apr. 7, 2001, now abandoned.

(60) Provisional application No. 60/211,019, filed on Jun. 12, 2000, provisional application No. 60/217,345, filed on Jul. 11, 2000.

(51) **Int. Cl.**
G06F 17/00 (2006.01)

(52) **U.S. Cl.** **715/800**; 715/234; 715/243; 715/853

(58) **Field of Classification Search** 715/800, 715/238, 249, 204, 234
See application file for complete search history.

(56) **References Cited**

U.S. PATENT DOCUMENTS

5,615,384 A 3/1997 Allard et al.
5,897,644 A 4/1999 Blumberg
5,952,994 A 9/1999 Ong et al.
5,956,025 A 9/1999 Goulden et al.
5,966,135 A 10/1999 Roy et al.
6,011,905 A 1/2000 Huttenlocher et al.

(Continued)

FOREIGN PATENT DOCUMENTS

GB 0009129.8 4/2000
GB 2344197 A 5/2000
JP 10-334082 A 12/1998

OTHER PUBLICATIONS

Scalable Vector Graphics (SVG) Specification W3C Working Draft Feb. 11, 1999 http://www.w3.org/TR/1999/WD-SVG-19990211/--Pub Feb. 11, 1999 by W3C pp. 1-7.

Fisher, B., G. Agelidis, J. Dill, P. Tan, G. Collaud and C. Jones. "CZWeb: Fish-Eye Views for Visualiziang the World-Wide Web", Proc. Seventh Int. Conf. on Human-Computer Interaction (HCI International '97), pp. 719-722, 1997.

(Continued)

Primary Examiner—Doug Hutton
Assistant Examiner—Quoc A Tran
(74) *Attorney, Agent, or Firm*—Law Office of R. Alan Burnett

(57) **ABSTRACT**

Mobile devices enabled to support resolution-independent scalable display of Internet (Web) content to allow Web pages to be scaled (zoomed) and panned for better viewing on smaller screen sizes. The mobile devices employ software-based processing of original Web content, including HTML-based content, XML, cascade style sheets, etc. to generate scalable content. The scalable content and/or data derived therefrom are then employed to enable the Web content to be rapidly rendered, zoomed, and panned. Display lists may also be employed to provide further enhancements in rendering speed.

88 Claims, 22 Drawing Sheets

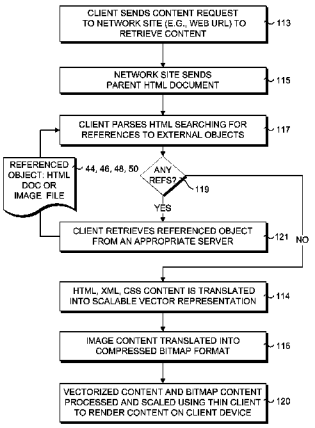

GOOGLE EXHIBIT 1011

U.S. PATENT DOCUMENTS

6,057,854	A	5/2000	Davis, Jr. et al.
6,076,166	A	6/2000	Moshfeghi et al.
6,211,856	B1	4/2001	Choi et al.
6,300,947	B1	10/2001	Kanevsky
6,337,693	B1	1/2002	Roy et al.
6,421,733	B1	7/2002	Tso et al.
6,449,639	B1	9/2002	Blumberg
6,456,305	B1	9/2002	Qureshi et al.
6,456,308	B1	9/2002	Agranet et al.
6,457,030	B1	9/2002	Adams et al.
6,466,203	B2	10/2002	Van Ee
6,546,397	B1	4/2003	Rempell
6,553,410	B2	4/2003	Kikinis
6,556,217	B1	4/2003	Mäkipää
6,615,212	B1	9/2003	Dutta et al.
6,674,445	B1	1/2004	Chithambaram et al.
6,704,024	B2	3/2004	Robotham et al.
6,781,600	B2	8/2004	Anwar
6,829,746	B1	12/2004	Schwerdtfeger et al.
6,857,102	B1	2/2005	Bickmore et al.
6,886,034	B2	4/2005	Blumberg
6,925,595	B1	8/2005	Whitledge et al.
6,978,418	B1	12/2005	Bain et al.
6,996,533	B2	2/2006	Ikeda et al.
7,023,572	B2	4/2006	Tuli
7,055,095	B1	5/2006	Anwar
7,072,984	B1	7/2006	Polonsky et al.
7,219,309	B2	5/2007	Kaasila et al.
7,308,649	B2	12/2007	Ehrich et al.
7,450,114	B2	11/2008	Anwar
2001/0015719	A1	8/2001	Van Ee et al.
2001/0047428	A1	11/2001	Hunter
2002/0023110	A1	2/2002	Fortin et al.
2002/0030699	A1	3/2002	Van Ee
2002/0112237	A1	8/2002	Ketts
2002/0158908	A1	10/2002	Vaajala et al.
2004/0049598	A1	3/2004	Tucker et al.
2005/0144256	A1	6/2005	Blumberg

OTHER PUBLICATIONS

Benjamin B. Bederson et al., Pad++: A Zoomable Graphical Sketchpad For Exploring Alternate Interface Physics, Sep. 19, 1995, pp. 1-30, http://www.cs.unm.edu/pad++.

Benjamin B. Bederson et al., A Zooming Web Browser, SPIE 1996, http://www.cs.umd.edu/hcil/jazz/learn/papers/spie-96-webbrowser.pdf, entirety (pages not numbered) .

Specification for Simple Vector Format (SVF) v1.1 Jan. 16, 1995, pp. 1-9.

Specification for Simple Vector Format (SFV) v2.0 Dec. 6, 2000, http://www.svf.org/spec.html, pp. 1-20.

SVF XML http://www.svf.org/svfxml.html, pp. 1-18.

Changes to SVF (Date unknown), pp. 1-2.

Scalable Vector Graphics (SVG) 1.0 Specification, W3C Candidate Recommendation Nov. 2, 2000, pp. 1-513.

Introduction to SVG, part of WD-SVG-19990211, http://www.w3.orgfTR/1999/ WD-SVG-19990211/intro.html#Document . . ., pp. 1-3.

W3C Scalable Vector Graphics (SVG)—History, http://www.w3.org/Graphics/SVG/History, pp. 1-18.

Janus Boye, SVG Brings Fast Vector Graphics to Web, Jul. 29, 1999 http://www.irt.org/articles/js176/, pp. 1-5.

Vector Markup Language (VML), World Wide Web Consortium Note May 13, 1998, Note-VML-19980513, http://www.w3.org/TR/1998/Note-VML_19980513, pp. 1-47.

Vector Markup Language, http://en.wikipedia.org/wiki/Vector_Markup_Language, pp. 1-2.

Precision Graphics Markup Language (PGML), World Wide Web Consortium Note Apr. 10, 1998, NOTE-PGML-19980410, http://www.w3.org/TR/1998/NOTE-PGML-19980410, pp. 1-31.

PCT International Search Report for International Application No. PCT/US01/40920, International Searching Authority, European Patent Office, Dec. 27, 2001, pp. 1-8.

PCT International Preliminary Exam Report for International Application No. PCT/US01/40920, International Preliminary Examining Authority, European Patent Office, Jun. 20, 2002, pp. 1-5.

Dennis, "Webraska Joins W3C for Next Generation Internet Graphics," Newsbytes, May 8, 2000, entirety (pages not numbered).

Fox et al. "Experience With Top Gun Wingman: A Proxy-Based Graphical Web Browser for the 3Com PalmPilot" Proceedings of Middleware '98, 1998, entirety (pages not numbered).

"Tadpole Technology: ILOG technology within Tadpole's Cartesia Redline system making repairs simpler," M2 Presswire, Jan. 1999, entirety (pages not numbered).

Thryft, "Wireless link ramped for 'always on' Internet," EETimes, Mar. 23, 1999, pp. 1-4.

Bharadvaj et al., "An Active Transcoding Proxy to Support Mobile Web Access," Proc. Of the IEEE Symposium on Reliable Distributed Systems, 1998, entirety (pages not numbered).

Björk, et al., "WEST: A Web Browser for Small Terminals," Proceedings of the 12 ACM symposium on User Interface Software and Technology (1999), entirety (pages not numbered).

Holmquist, "The Zoom Browser," Human IT Tridskrift för studier av IT ur ett humanvetenskaplight perspektive, Mar., 1998, pp. 1-18.

Chapple, "Rethinking the role of an embedded Internet client in digital set-top boxes," WebTV Workshop Submission Paper, Jun. 1998, http://www.w3.org/Architecture/1998/06/Workshop/paper11/, pp. 1-4.

Graham, "Mobile SVG at BitFlash Inc.", May 2001, http://www.w3.org/Talks/2002/1007-Di-Helsinki/bitflash/index.html, pp. 1-4.

Koncz, "Working with Autodesk Mapguide," Nov. 2000, http://www.directionsmag.com/article.php? article_id=77&trv=1, pp. 1-6.

Schaffer et al. "Navigating Hierarchically Cluster Networks through Fisheye and Full-Zoom Methods," Mar. 24, 1988—pp. 1-20.

Holmquist "Flip Zooming: Focus+Context Visualization of Linearly Ordered Discrete Visual Structures,"Published 2000, pp. 27-53.

Scalable Vector Graphics (SVG) Specification, W3C Working Draft Feb. 11, 1999 WD-SVG-19990211, http://www.w3.org/TR/1999/WD-SVG-19990211/ (HTML format—initial page).

Scalable Vector Graphics (SVG) Specification, W3C Working Draft Apr. 12, 1999 WD-SVG-19990412, http://www.w3.org/TR/1999/WD-SVG-19990412/ (HTML format—initial page).

Jones et al. "From the large screen to the small screen—retaining the designer's design for effective user interaction,"IEEE Colloquim on Issues for Networked Interpersonal Communicators, May 1997, pp. 3/1-3/4.

Pacchiano, "Adobe's New View," Computer Shopper, vol. 19, No. 4, Apr. 1999, p. 346.

Official USPTO Actions for U.S. Appl. No. 09/878,097. (Entirety—pages not numbered).

Official USPTO Actions for U.S. Appl. No. 11/045,649. (Entirety—pages not numbered).

Official USPTO Actions for U.S. Appl. No. 11/045,757. (Entirety—pages not numbered).

Official USPTO Actions for U.S. Appl. No. 11/738,932. (Entirety—pages not numbered).

Official USPTO Action for U.S. Appl. No. 11/868,124 Mailed Aug. 24, 2010 pp.1-15.

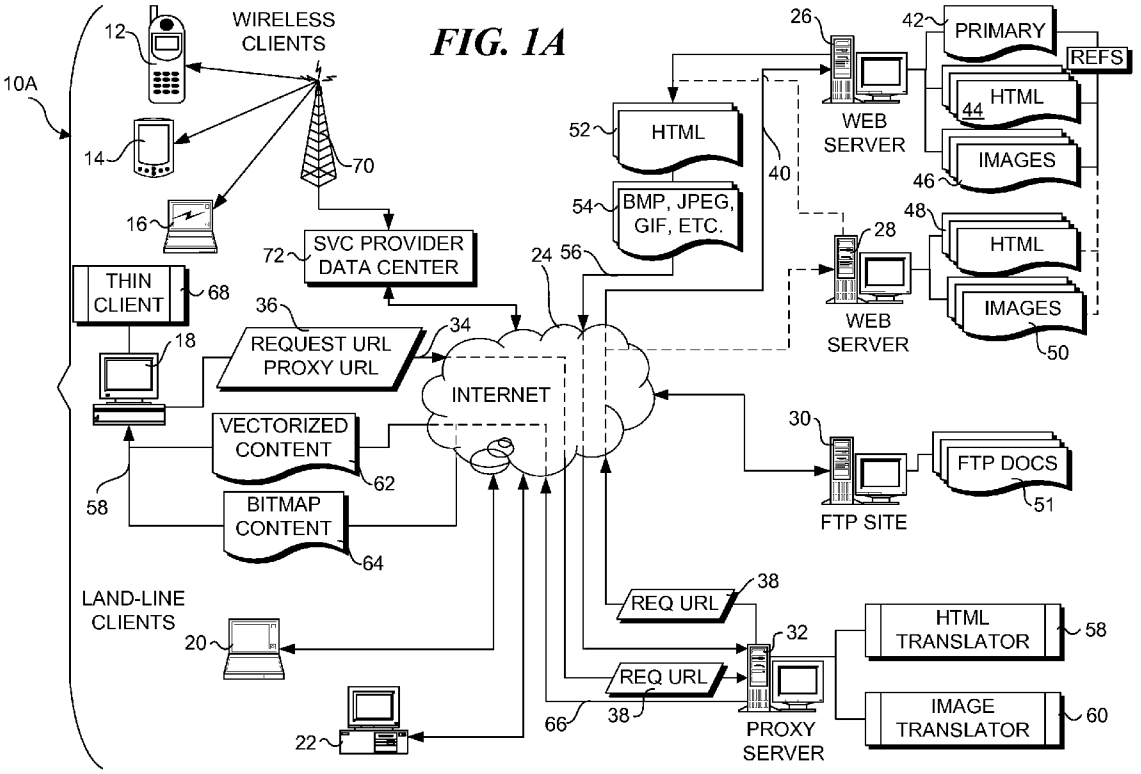
FIG. 1A
10A
WIRELESS CLIENTS
12
14
16
70
72
SVC PROVIDER DATA CENTER
THIN CLIENT
68
18
36
REQUEST URL PROXY URL
34
INTERNET
24
56
VECTORIZED CONTENT
62
58
BITMAP CONTENT
64
LAND-LINE CLIENTS
20
22
52
HTML
54
BMP, JPEG, GIF, ETC.
40
26
WEB SERVER
42
PRIMARY
REFS
HTML
44
IMAGES
46
28
48
HTML
WEB SERVER
IMAGES
50
30
FTP SITE
FTP DOCS
51
REQ URL
38
32
REQ URL
38
66
PROXY SERVER
HTML TRANSLATOR
58
IMAGE TRANSLATOR
60

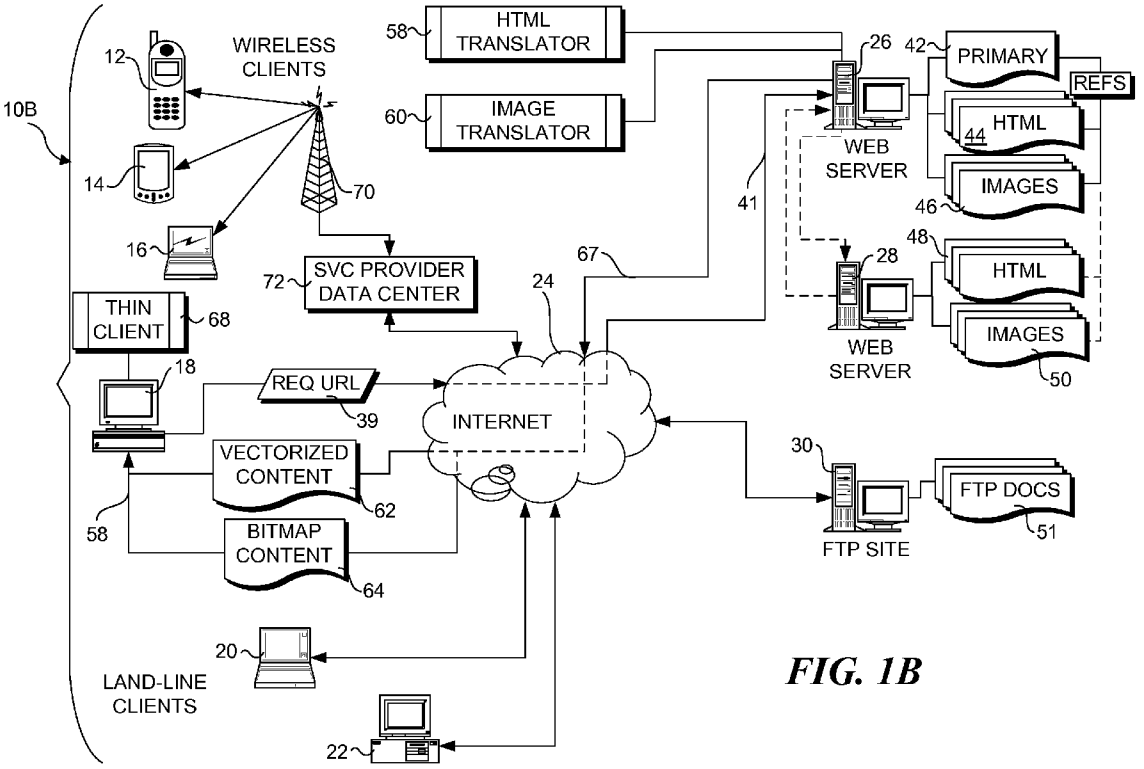
10B
12
WIRELESS CLIENTS
14
16
70
58
HTML TRANSLATOR
60
IMAGE TRANSLATOR
26
42
PRIMARY
REFS
HTML
44
WEB SERVER
IMAGES
46
41
48
28
HTML
WEB SERVER
IMAGES
50
67
72
SVC PROVIDER DATA CENTER
24
THIN CLIENT
68
18
REQ URL
39
INTERNET
VECTORIZED CONTENT
62
58
BITMAP CONTENT
64
30
FTP DOCS
51
FTP SITE
20
LAND-LINE CLIENTS
22

FIG. 1B

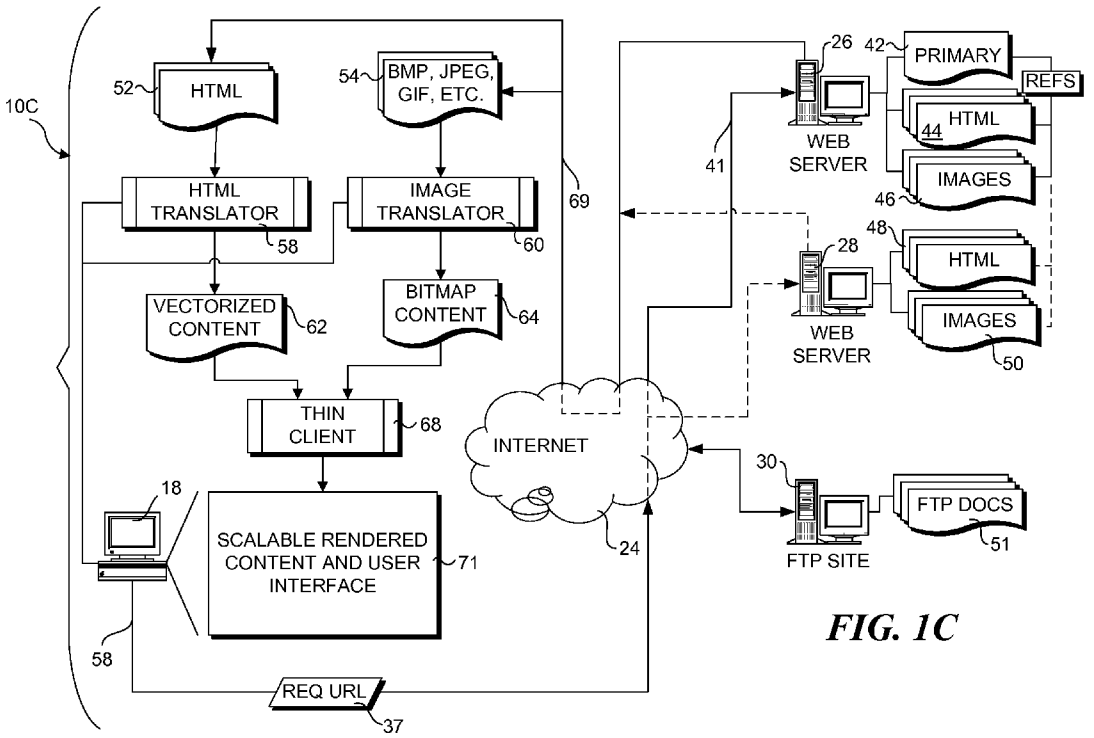
10C
52
HTML
54
BMP, JPEG, GIF, ETC.
HTML TRANSLATOR
58
IMAGE TRANSLATOR
60
69
VECTORIZED CONTENT
62
BITMAP CONTENT
64
THIN CLIENT
68
18
SCALABLE RENDERED CONTENT AND USER INTERFACE
71
58
REQ URL
37
INTERNET
24
26
WEB SERVER
41
42
PRIMARY
REFS
HTML
44
IMAGES
46
48
28
WEB SERVER
HTML
IMAGES
50
30
FTP SITE
FTP DOCS
51

FIG. 1C

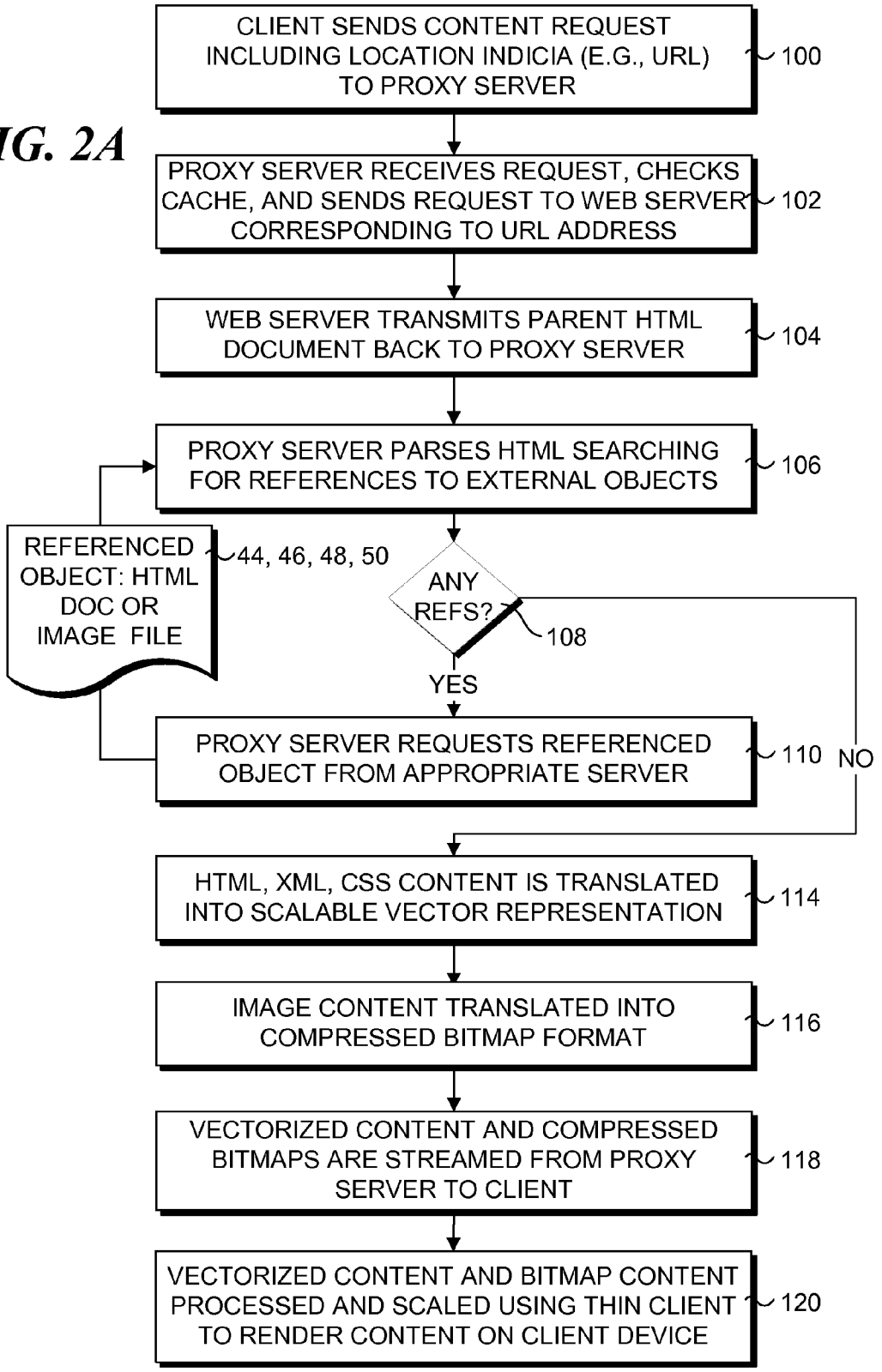
FIG. 2A
CLIENT SENDS CONTENT REQUEST INCLUDING LOCATION INDICIA (E.G., URL) TO PROXY SERVER
100
PROXY SERVER RECEIVES REQUEST, CHECKS CACHE, AND SENDS REQUEST TO WEB SERVER CORRESPONDING TO URL ADDRESS
102
WEB SERVER TRANSMITS PARENT HTML DOCUMENT BACK TO PROXY SERVER
104
PROXY SERVER PARSES HTML SEARCHING FOR REFERENCES TO EXTERNAL OBJECTS
106
REFERENCED OBJECT: HTML DOC OR IMAGE FILE
44, 46, 48, 50
ANY REFS?
108
YES
NO
PROXY SERVER REQUESTS REFERENCED OBJECT FROM APPROPRIATE SERVER
110
HTML, XML, CSS CONTENT IS TRANSLATED INTO SCALABLE VECTOR REPRESENTATION
114
IMAGE CONTENT TRANSLATED INTO COMPRESSED BITMAP FORMAT
116
VECTORIZED CONTENT AND COMPRESSED BITMAPS ARE STREAMED FROM PROXY SERVER TO CLIENT
118
VECTORIZED CONTENT AND BITMAP CONTENT PROCESSED AND SCALED USING THIN CLIENT TO RENDER CONTENT ON CLIENT DEVICE
120

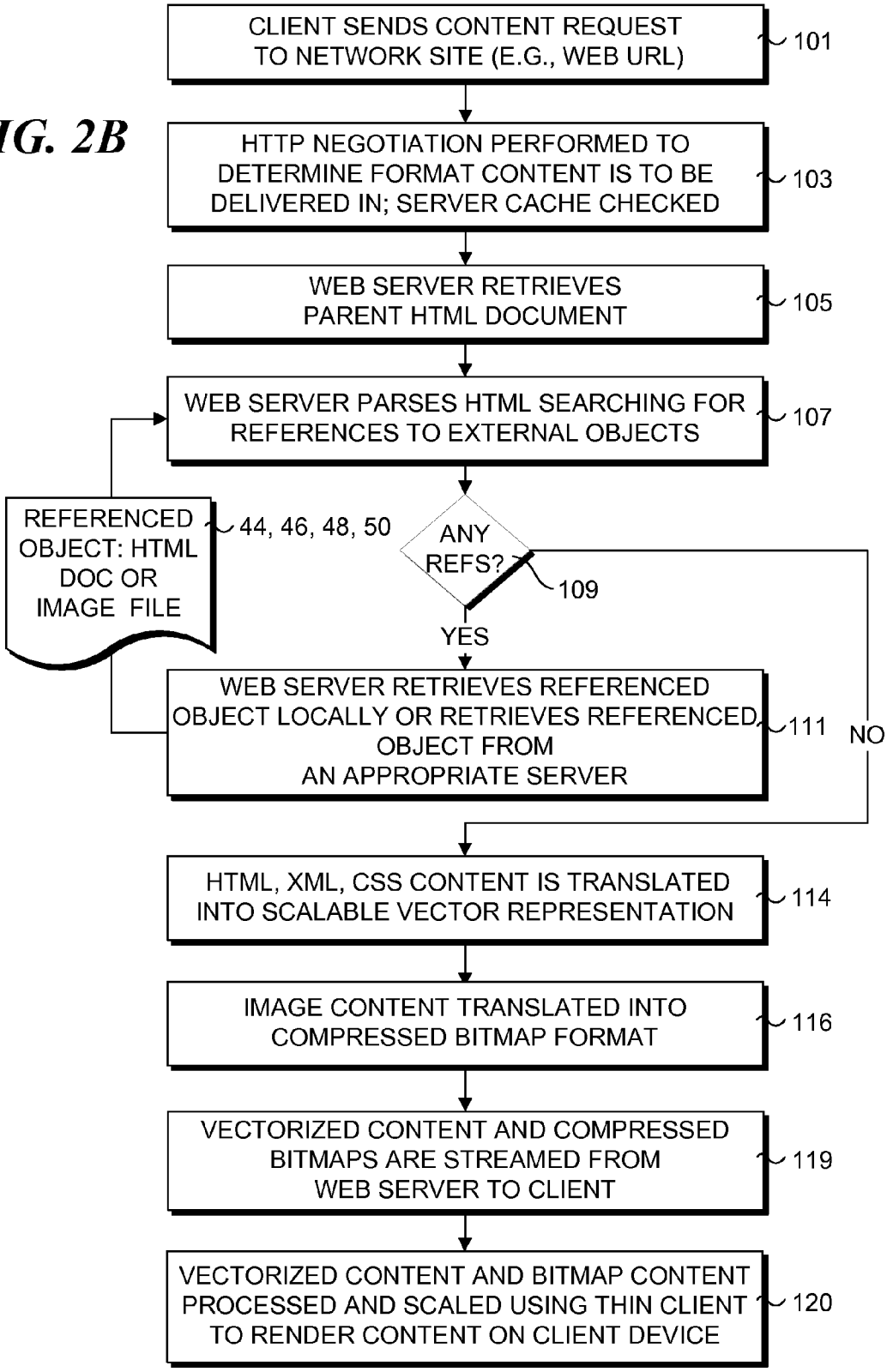
FIG. 2B
CLIENT SENDS CONTENT REQUEST TO NETWORK SITE (E.G., WEB URL)
101
HTTP NEGOTIATION PERFORMED TO DETERMINE FORMAT CONTENT IS TO BE DELIVERED IN; SERVER CACHE CHECKED
103
WEB SERVER RETRIEVES PARENT HTML DOCUMENT
105
WEB SERVER PARSES HTML SEARCHING FOR REFERENCES TO EXTERNAL OBJECTS
107
REFERENCED OBJECT: HTML DOC OR IMAGE FILE
44, 46, 48, 50
ANY REFS?
109
YES
NO
WEB SERVER RETRIEVES REFERENCED OBJECT LOCALLY OR RETRIEVES REFERENCED OBJECT FROM AN APPROPRIATE SERVER
111
HTML, XML, CSS CONTENT IS TRANSLATED INTO SCALABLE VECTOR REPRESENTATION
114
IMAGE CONTENT TRANSLATED INTO COMPRESSED BITMAP FORMAT
116
VECTORIZED CONTENT AND COMPRESSED BITMAPS ARE STREAMED FROM WEB SERVER TO CLIENT
119
VECTORIZED CONTENT AND BITMAP CONTENT PROCESSED AND SCALED USING THIN CLIENT TO RENDER CONTENT ON CLIENT DEVICE
120

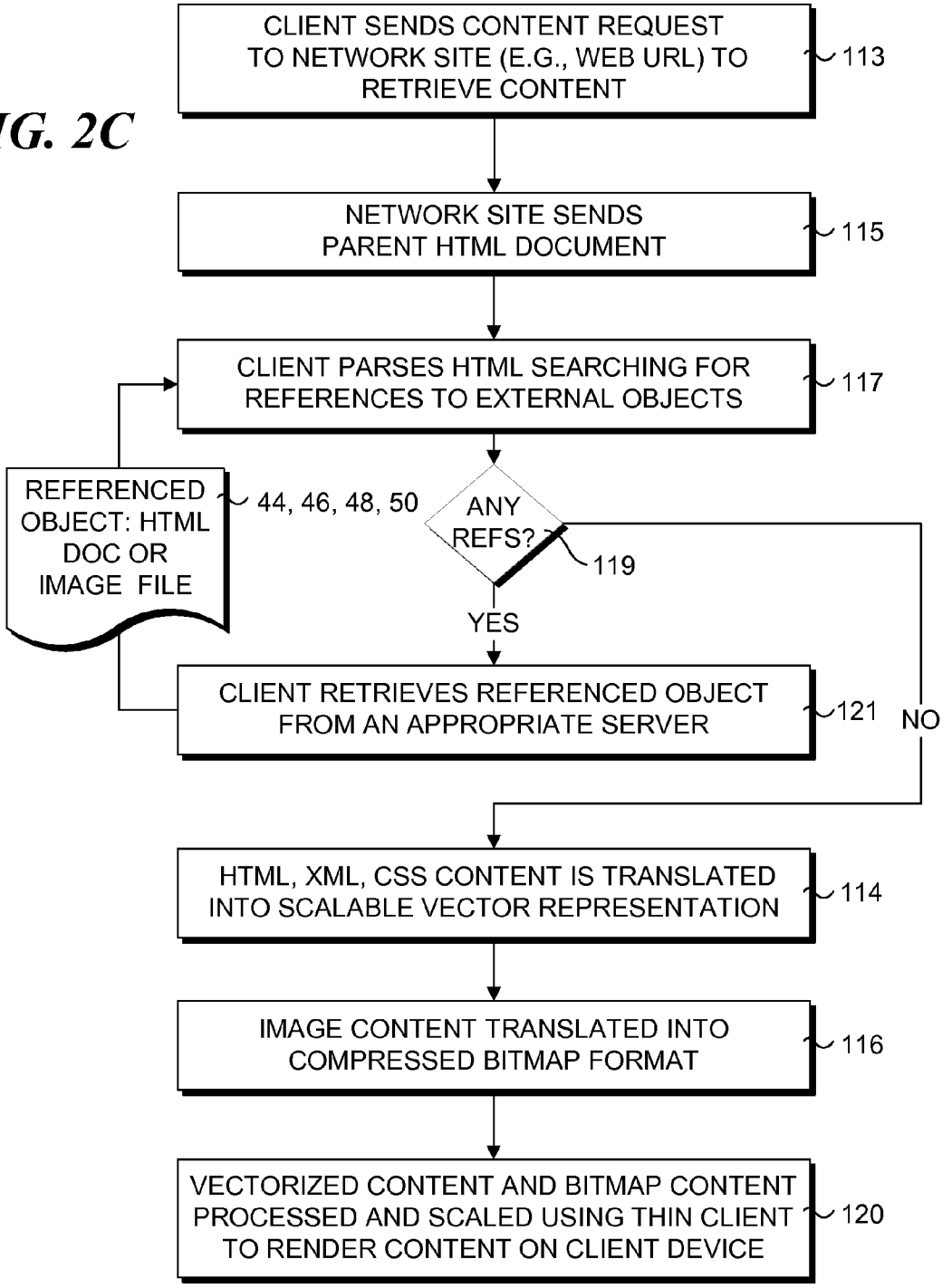
FIG. 2C
CLIENT SENDS CONTENT REQUEST TO NETWORK SITE (E.G., WEB URL) TO RETRIEVE CONTENT
113
NETWORK SITE SENDS PARENT HTML DOCUMENT
115
CLIENT PARSES HTML SEARCHING FOR REFERENCES TO EXTERNAL OBJECTS
117
REFERENCED OBJECT: HTML DOC OR IMAGE FILE
44, 46, 48, 50
ANY REFS?
119
YES
NO
CLIENT RETRIEVES REFERENCED OBJECT FROM AN APPROPRIATE SERVER
121
HTML, XML, CSS CONTENT IS TRANSLATED INTO SCALABLE VECTOR REPRESENTATION
114
IMAGE CONTENT TRANSLATED INTO COMPRESSED BITMAP FORMAT
116
VECTORIZED CONTENT AND BITMAP CONTENT PROCESSED AND SCALED USING THIN CLIENT TO RENDER CONTENT ON CLIENT DEVICE
120

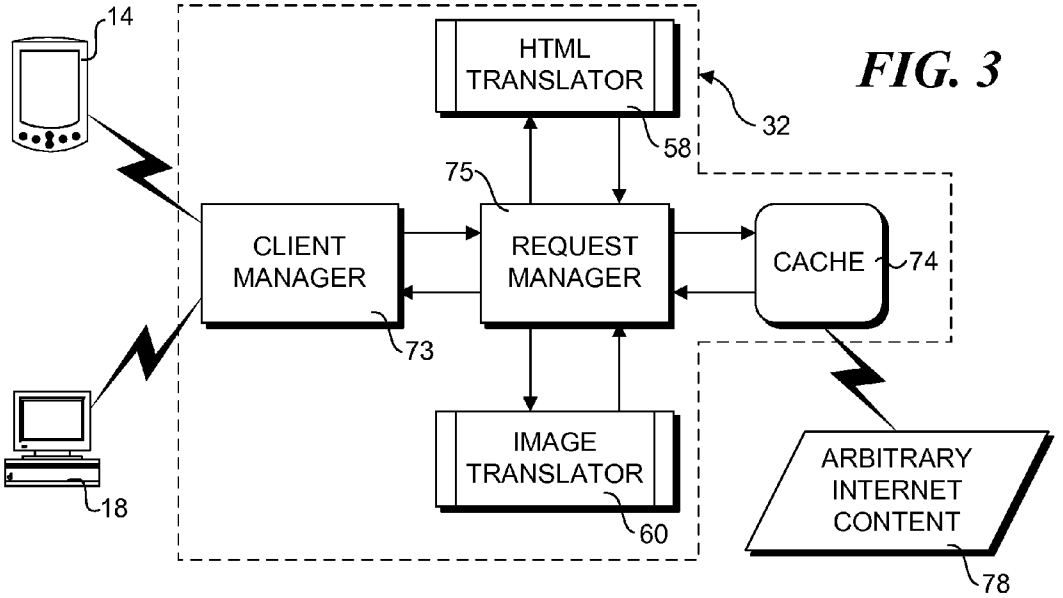
14
HTML TRANSLATOR
32
58
75
CLIENT MANAGER
REQUEST MANAGER
CACHE
74
73
IMAGE TRANSLATOR
ARBITRARY INTERNET CONTENT
18
60
78

FIG. 3

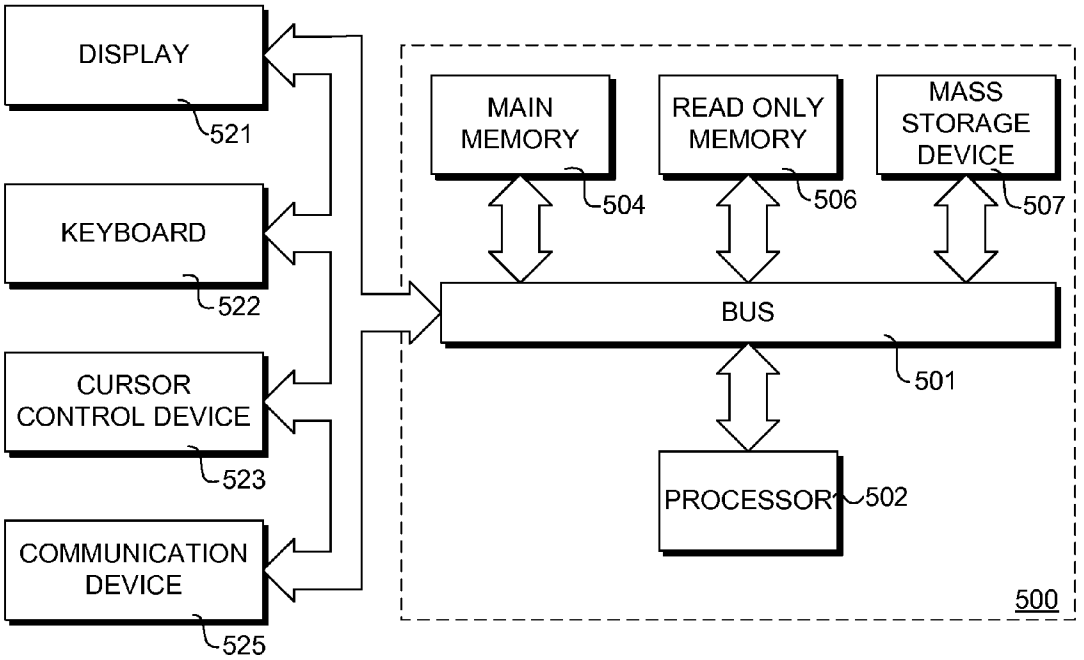
DISPLAY
521
KEYBOARD
522
CURSOR CONTROL DEVICE
523
COMMUNICATION DEVICE
525
MAIN MEMORY
504
READ ONLY MEMORY
506
MASS STORAGE DEVICE
507
BUS
501
PROCESSOR
502
500

FIG. 10

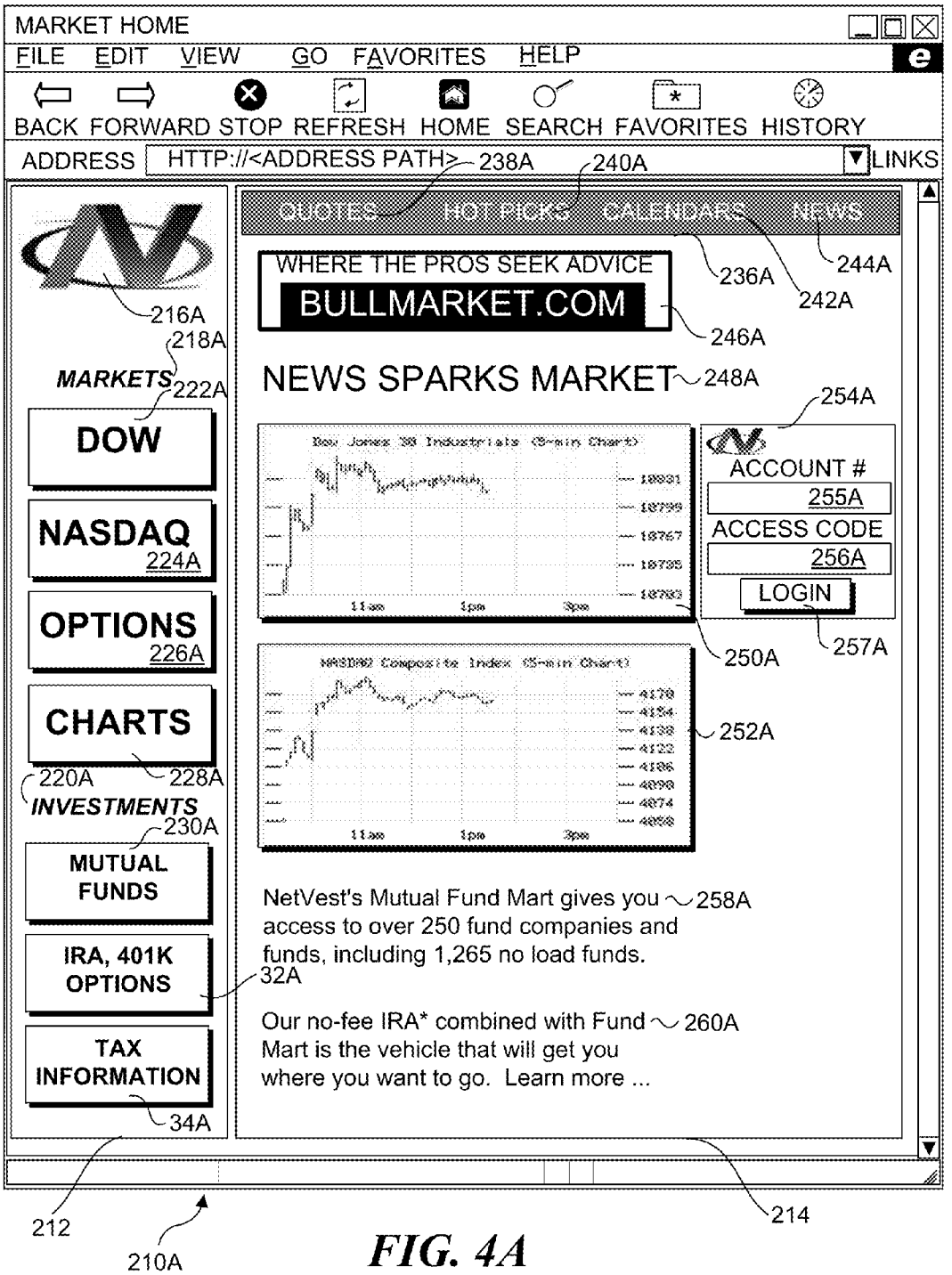
MARKET HOME
FILE EDIT VIEW GO FAVORITES HELP
BACK FORWARD STOP REFRESH HOME SEARCH FAVORITES HISTORY
ADDRESS HTTP://<ADDRESS PATH>
LINKS
238A
240A
QUOTES
HOT PICKS
CALENDARS
NEWS
236A
242A
244A
WHERE THE PROS SEEK ADVICE
BULLMARKET.COM
246A
216A
218A
MARKETS
222A
NEWS SPARKS MARKET
248A
254A
DOW
NASDAQ
224A
OPTIONS
226A
CHARTS
220A
228A
INVESTMENTS
230A
MUTUAL FUNDS
IRA, 401K OPTIONS
TAX INFORMATION
34A
ACCOUNT #
255A
ACCESS CODE
256A
LOGIN
257A
250A
252A
NetVest's Mutual Fund Mart gives you access to over 250 fund companies and funds, including 1,265 no load funds.
258A
32A
Our no-fee IRA* combined with Fund Mart is the vehicle that will get you where you want to go. Learn more ...
260A
212
210A
214

FIG. 4A

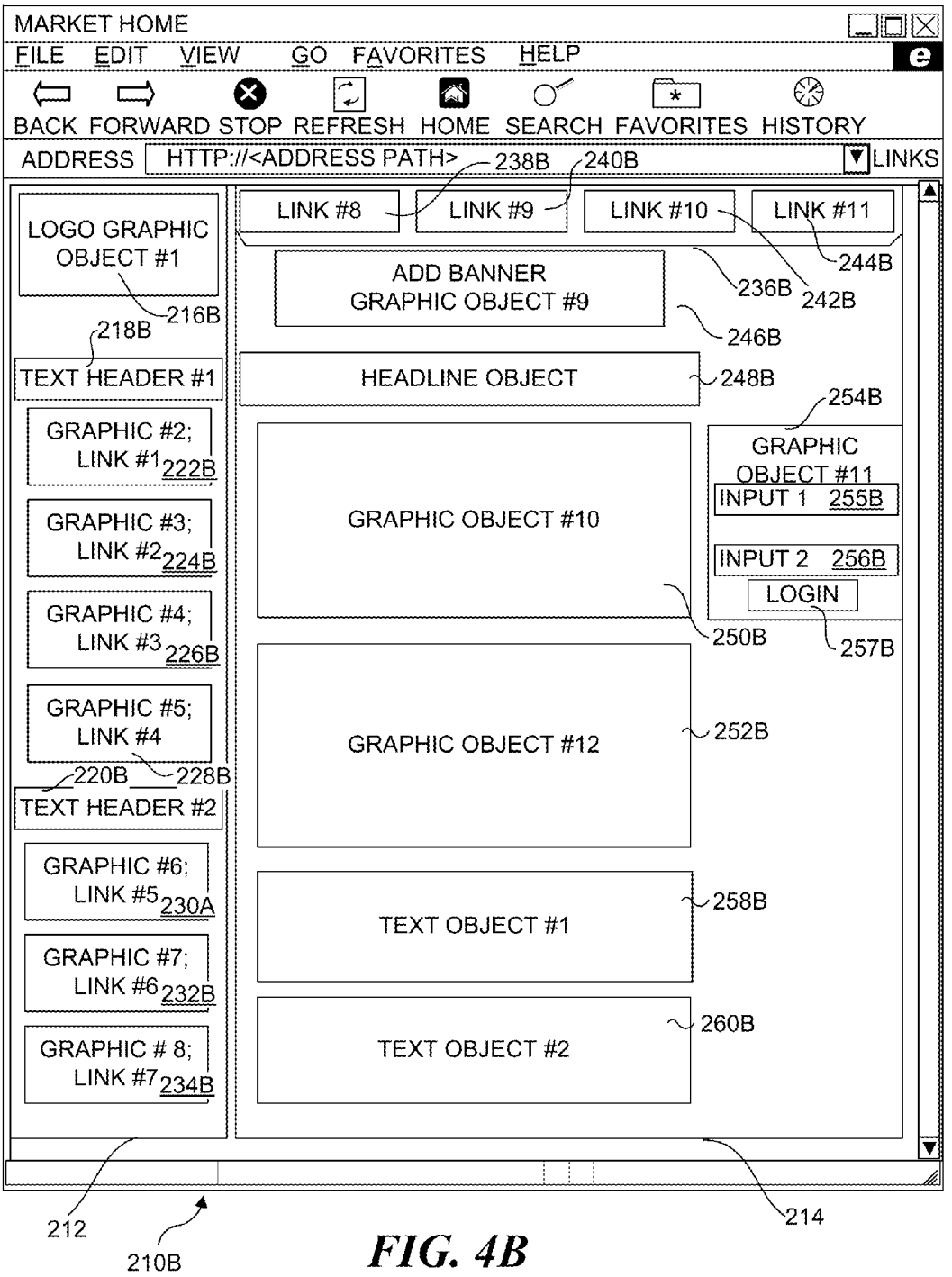
MARKET HOME
FILE EDIT VIEW GO FAVORITES HELP
BACK FORWARD STOP REFRESH HOME SEARCH FAVORITES HISTORY
ADDRESS HTTP://<ADDRESS PATH>
LINKS
LOGO GRAPHIC OBJECT #1
216B
218B
TEXT HEADER #1
GRAPHIC #2; LINK #1 222B
GRAPHIC #3; LINK #2 224B
GRAPHIC #4; LINK #3 226B
GRAPHIC #5; LINK #4
220B
228B
TEXT HEADER #2
GRAPHIC #6; LINK #5 230A
GRAPHIC #7; LINK #6 232B
GRAPHIC # 8; LINK #7 234B
LINK #8
LINK #9
LINK #10
LINK #11
238B
240B
244B
236B
242B
ADD BANNER GRAPHIC OBJECT #9
246B
HEADLINE OBJECT
248B
254B
GRAPHIC OBJECT #11
INPUT 1 255B
INPUT 2 256B
LOGIN
257B
GRAPHIC OBJECT #10
250B
GRAPHIC OBJECT #12
252B
TEXT OBJECT #1
258B
TEXT OBJECT #2
260B
212
210B
214

FIG. 4B

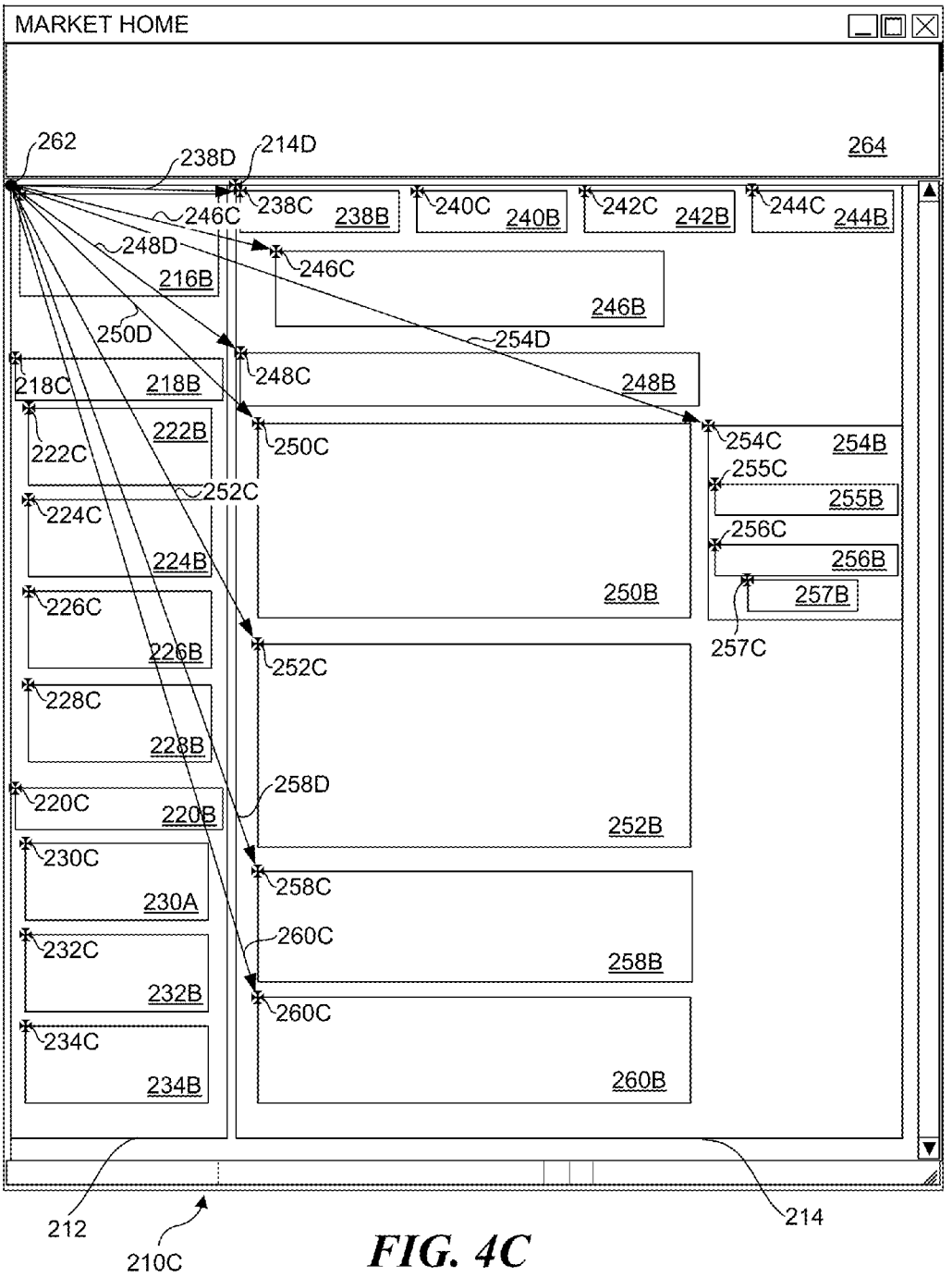
MARKET HOME
262
238D
214D
264
238C
238B
240C
240B
242C
242B
244C
244B
246C
248D
216B
246C
246B
250D
254D
218C
218B
248C
248B
222B
222C
250C
254C
254B
255C
252C
255B
224C
256C
224B
256B
250B
257B
226C
226B
257C
252C
228C
228B
258D
220C
220B
252B
230C
230A
258C
260C
232C
258B
232B
260C
234C
234B
260B
212
210C
214

FIG. 4C

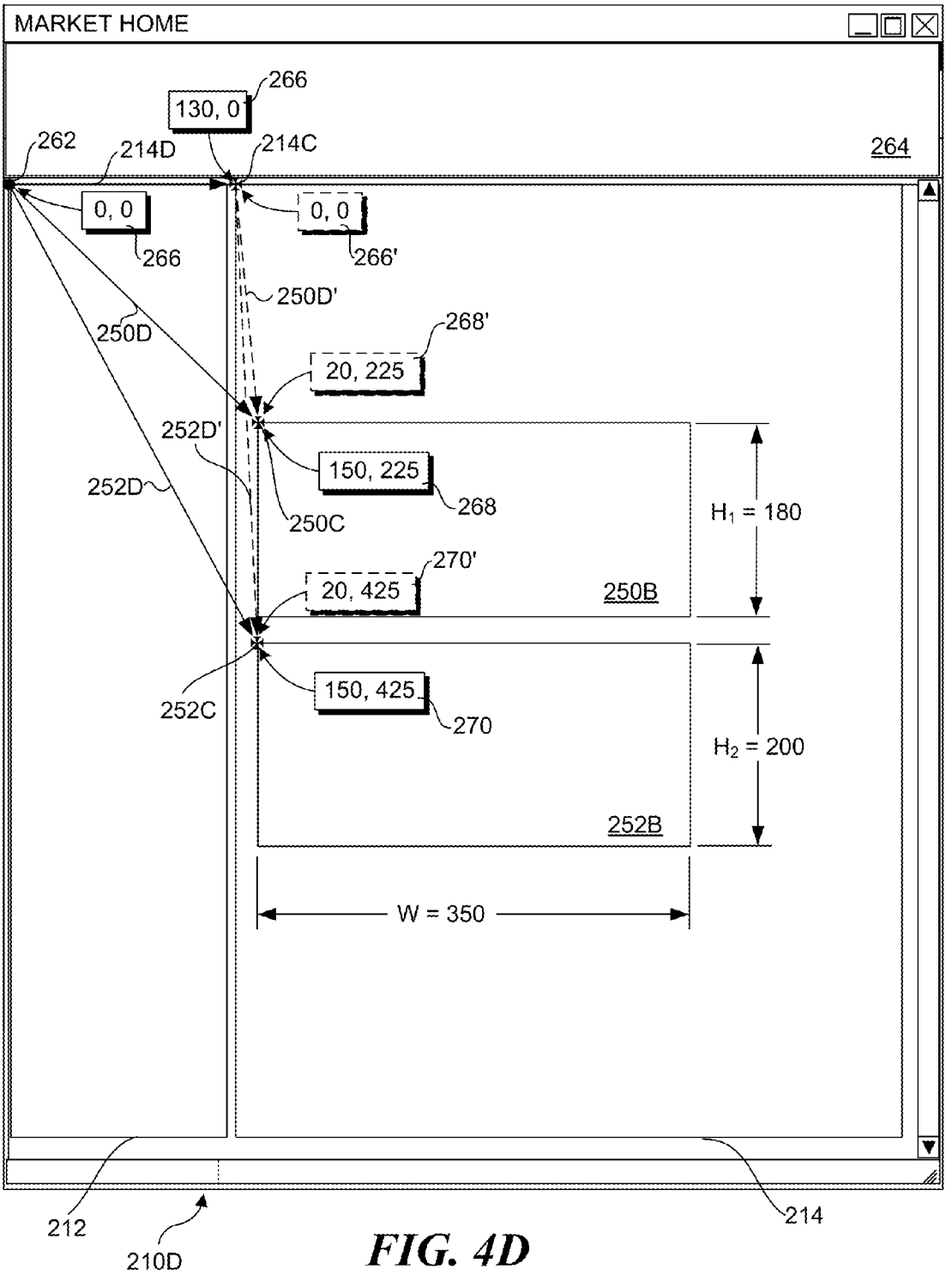
MARKET HOME
266
130, 0
262
214D
214C
264
0, 0
266
0, 0
266'
250D'
250D
268'
20, 225
252D'
150, 225
252D
268
250C
H1 = 180
270'
20, 425
250B
150, 425
252C
270
H2 = 200
252B
W = 350
212
210D
214

FIG. 4D

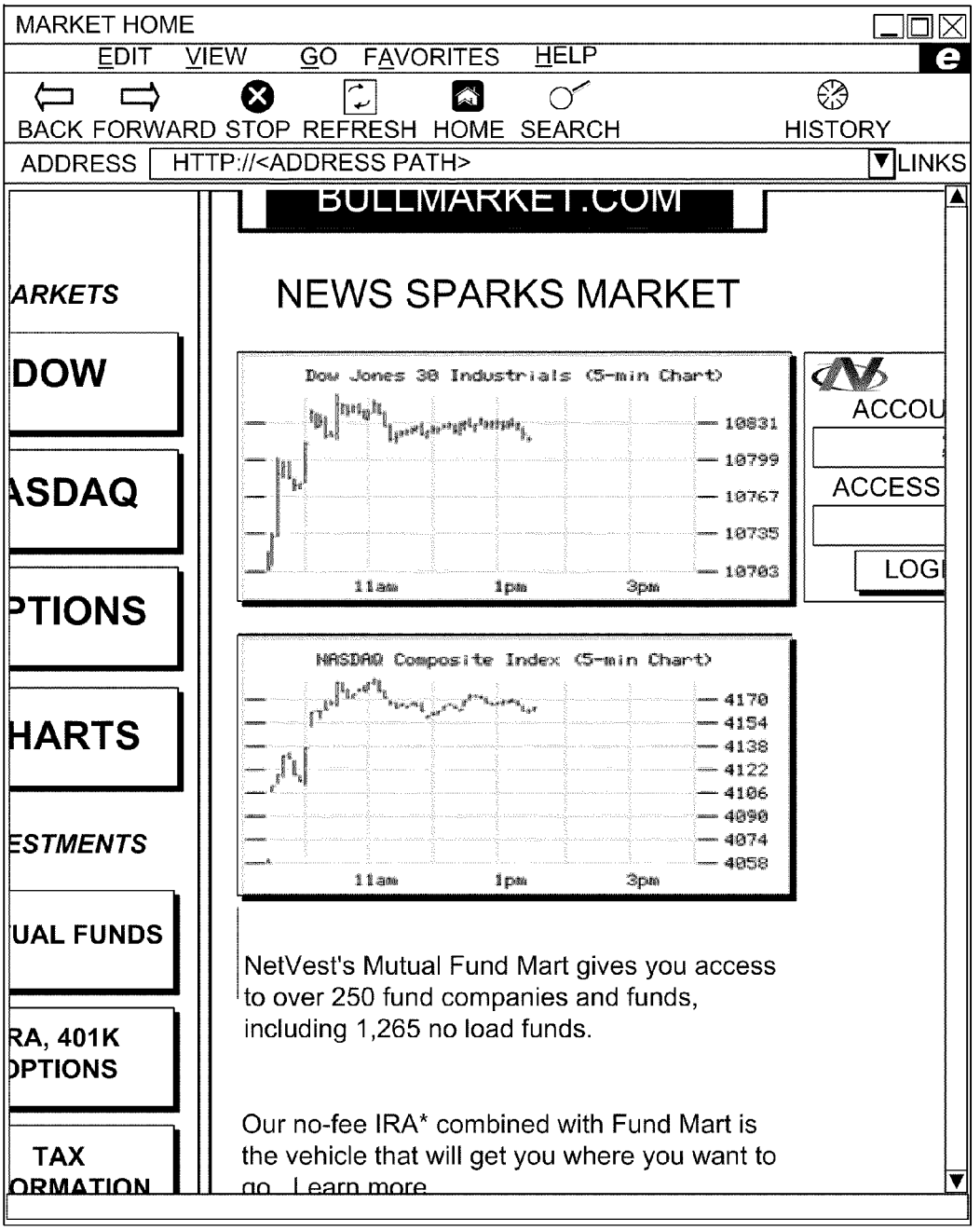
MARKET HOME
EDIT VIEW GO FAVORITES HELP
BACK FORWARD STOP REFRESH HOME SEARCH HISTORY
ADDRESS HTTP://<ADDRESS PATH>
LINKS
BULLMARKET.COM
ARKETS
DOW
ASDAQ
PTIONS
HARTS
ESTMENTS
UAL FUNDS
RA, 401K
PTIONS
TAX
ORMATION
NEWS SPARKS MARKET
Dow Jones 30 Industrials (5-min Chart)
10831
10799
10767
10735
10703
11am
1pm
3pm
ACCOU
ACCESS
LOGI
NASDAQ Composite Index (5-min Chart)
4170
4154
4138
4122
4106
4090
4074
4058
11am
1pm
3pm
NetVest's Mutual Fund Mart gives you access to over 250 fund companies and funds, including 1,265 no load funds.
Our no-fee IRA* combined with Fund Mart is the vehicle that will get you where you want to go. Learn more

210E

FIG. 4E

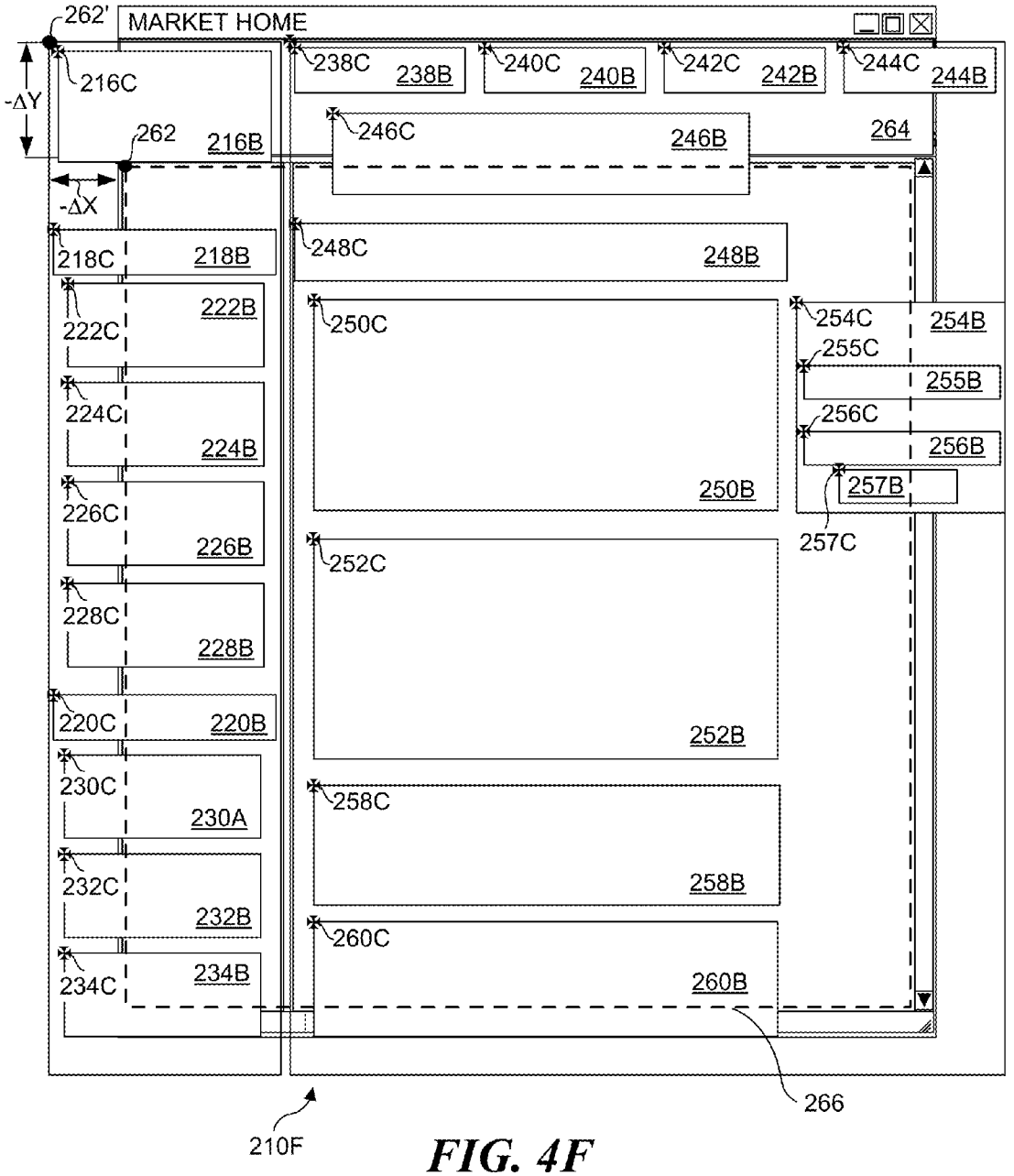
262'
MARKET HOME
-ΔY
216C
262
216B
-ΔX
238C
238B
240C
240B
242C
242B
244C
244B
246C
246B
264
218C
218B
248C
248B
222B
222C
250C
254C
254B
255C
255B
224C
224B
256C
256B
250B
257B
226C
226B
257C
252C
228C
228B
220C
220B
252B
230C
230A
258C
232C
232B
258B
260C
234C
234B
260B
266
210F

FIG. 4F

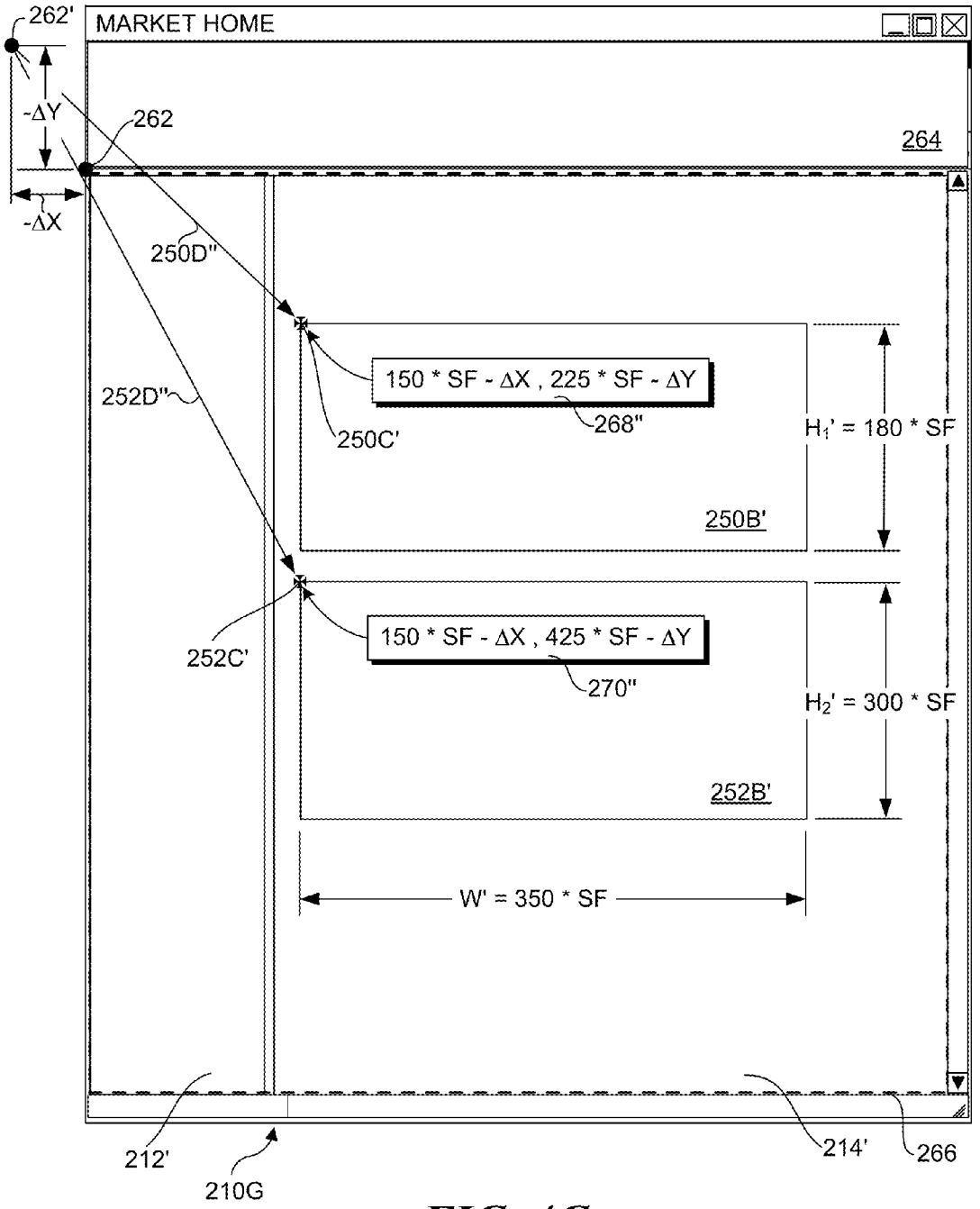
262'
MARKET HOME
-ΔY
262
264
-ΔX
250D"
150 * SF - ΔX , 225 * SF - ΔY
252D"
268"
250C'
H1' = 180 * SF
250B'
252C'
150 * SF - ΔX , 425 * SF - ΔY
270"
H2' = 300 * SF
252B'
W' = 350 * SF
212'
210G
214'
266

FIG. 4G

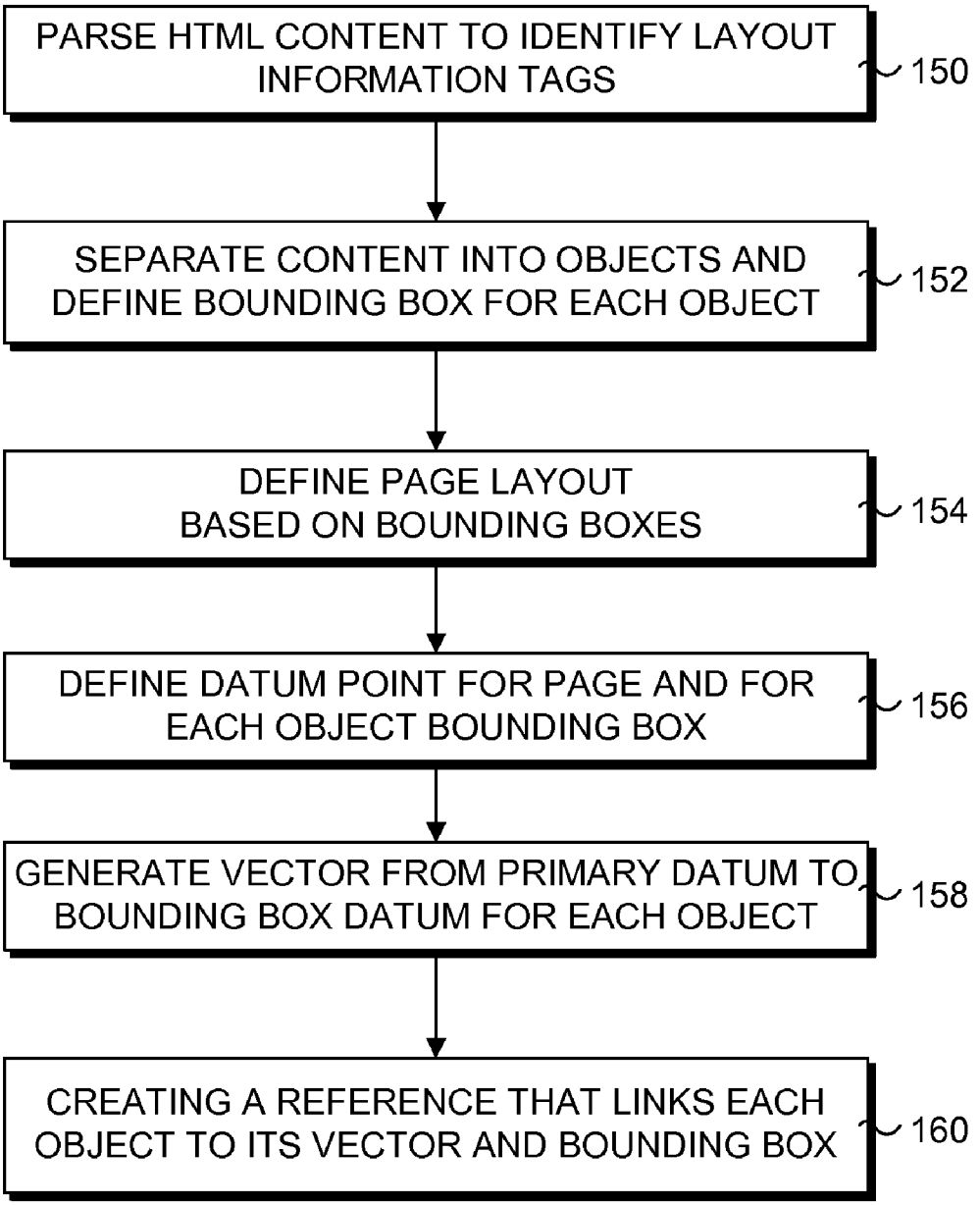
PARSE HTML CONTENT TO IDENTIFY LAYOUT INFORMATION TAGS
150
SEPARATE CONTENT INTO OBJECTS AND DEFINE BOUNDING BOX FOR EACH OBJECT
152
DEFINE PAGE LAYOUT BASED ON BOUNDING BOXES
154
DEFINE DATUM POINT FOR PAGE AND FOR EACH OBJECT BOUNDING BOX
156
GENERATE VECTOR FROM PRIMARY DATUM TO BOUNDING BOX DATUM FOR EACH OBJECT
158
CREATING A REFERENCE THAT LINKS EACH OBJECT TO ITS VECTOR AND BOUNDING BOX
160

FIG. 5

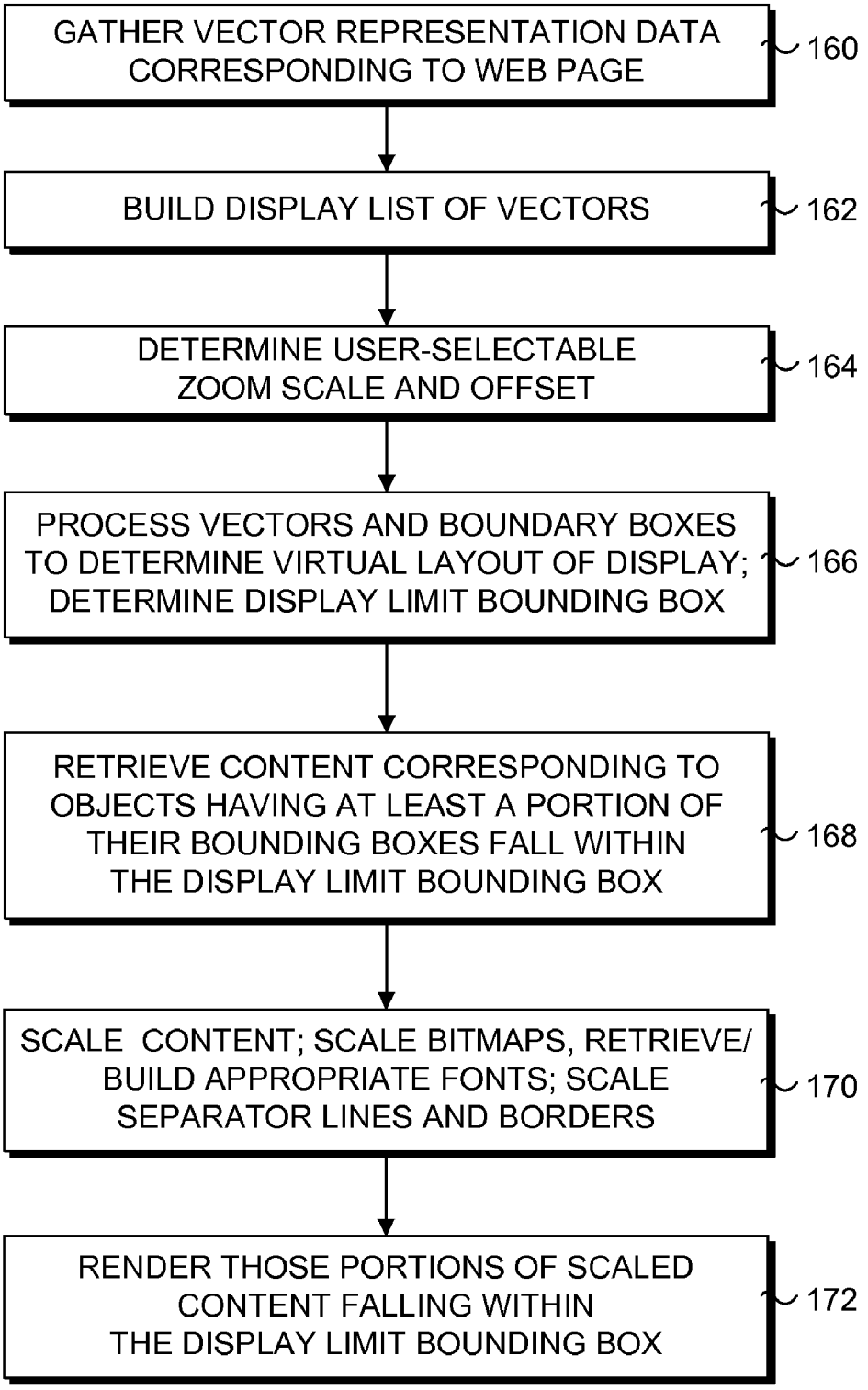
GATHER VECTOR REPRESENTATION DATA CORRESPONDING TO WEB PAGE
160
BUILD DISPLAY LIST OF VECTORS
162
DETERMINE USER-SELECTABLE ZOOM SCALE AND OFFSET
164
PROCESS VECTORS AND BOUNDARY BOXES TO DETERMINE VIRTUAL LAYOUT OF DISPLAY; DETERMINE DISPLAY LIMIT BOUNDING BOX
166
RETRIEVE CONTENT CORRESPONDING TO OBJECTS HAVING AT LEAST A PORTION OF THEIR BOUNDING BOXES FALL WITHIN THE DISPLAY LIMIT BOUNDING BOX
168
SCALE CONTENT; SCALE BITMAPS, RETRIEVE/ BUILD APPROPRIATE FONTS; SCALE SEPARATOR LINES AND BORDERS
170
RENDER THOSE PORTIONS OF SCALED CONTENT FALLING WITHIN THE DISPLAY LIMIT BOUNDING BOX
172

FIG. 6

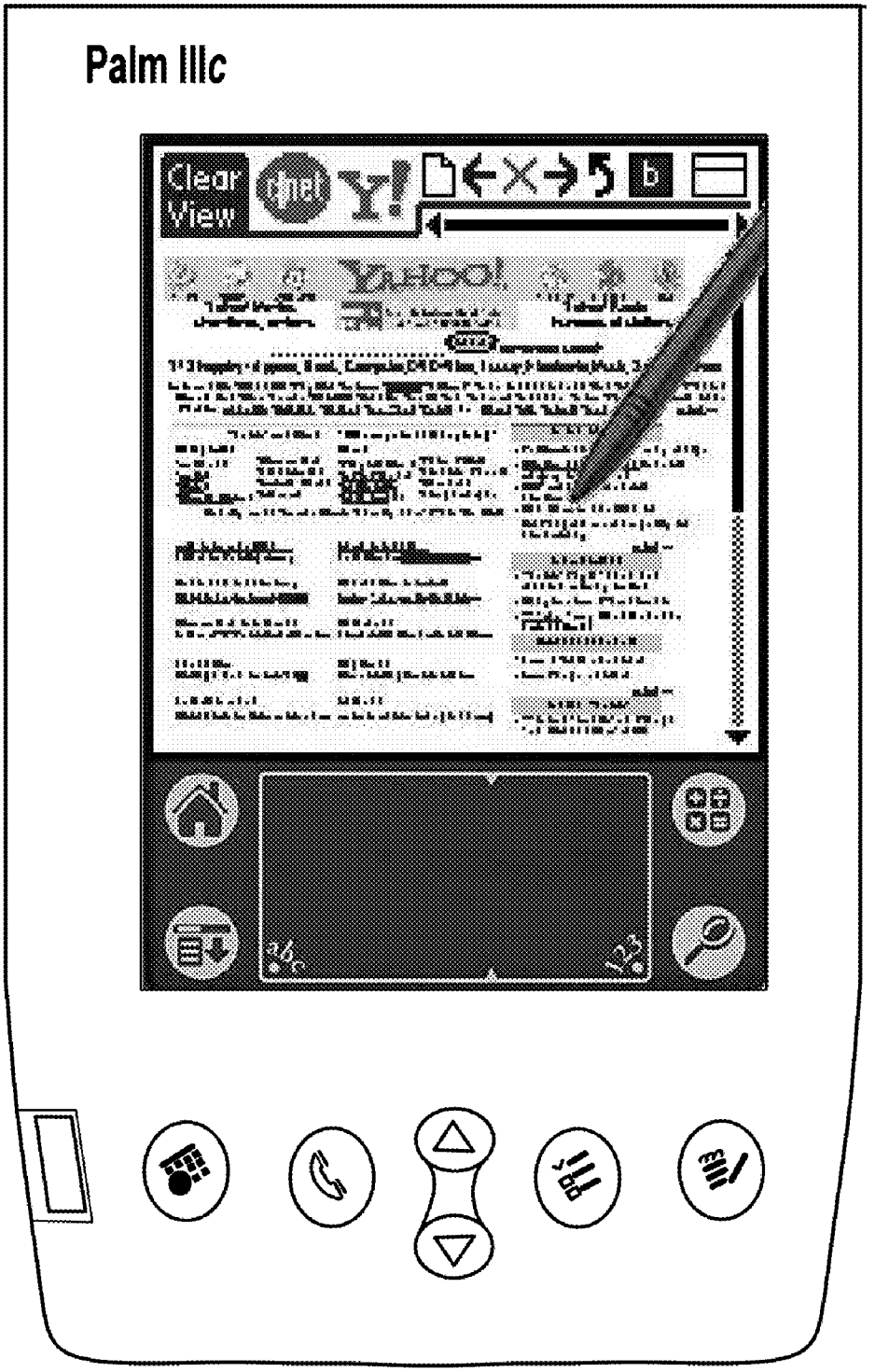

FIG. 7A

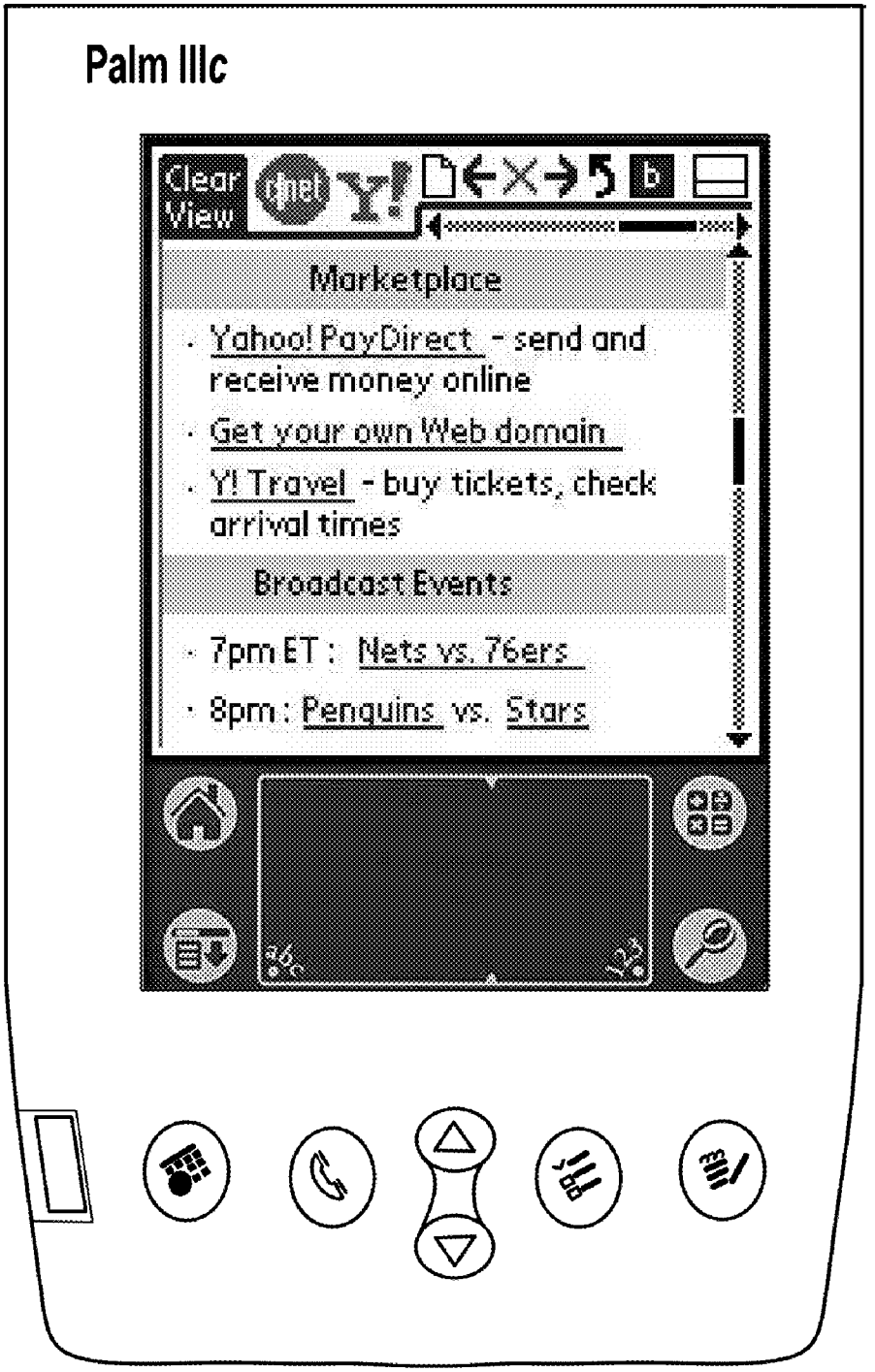
Palm IIIc
Clear View
Y!
Marketplace
Yahoo! PayDirect - send and receive money online
Get your own Web domain
Y! Travel - buy tickets, check arrival times
Broadcast Events
7pm ET : Nets vs. 76ers
8pm : Penguins vs. Stars

FIG. 7B

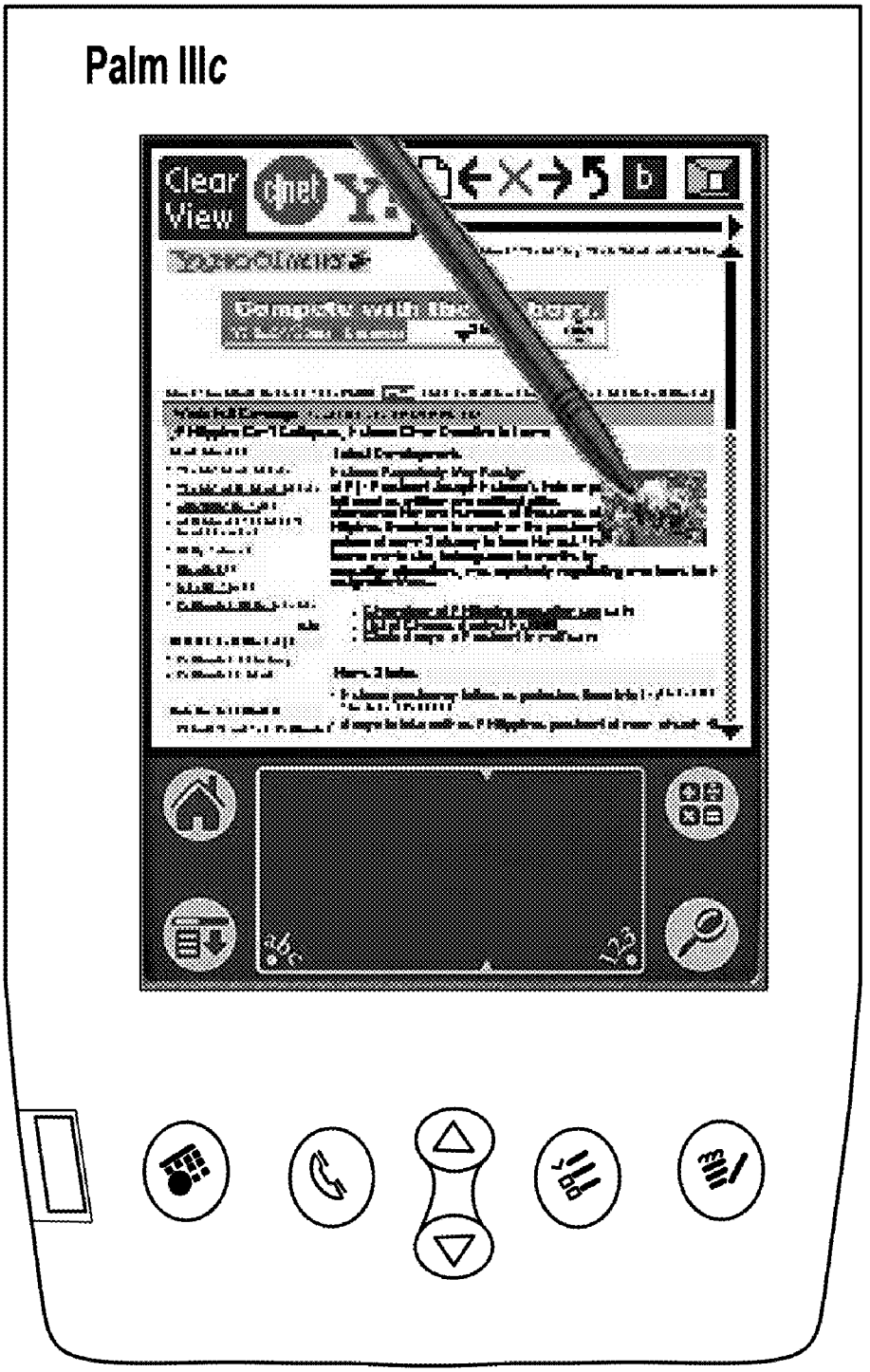

FIG. 8A

FIG. 8B

FIG. 9A

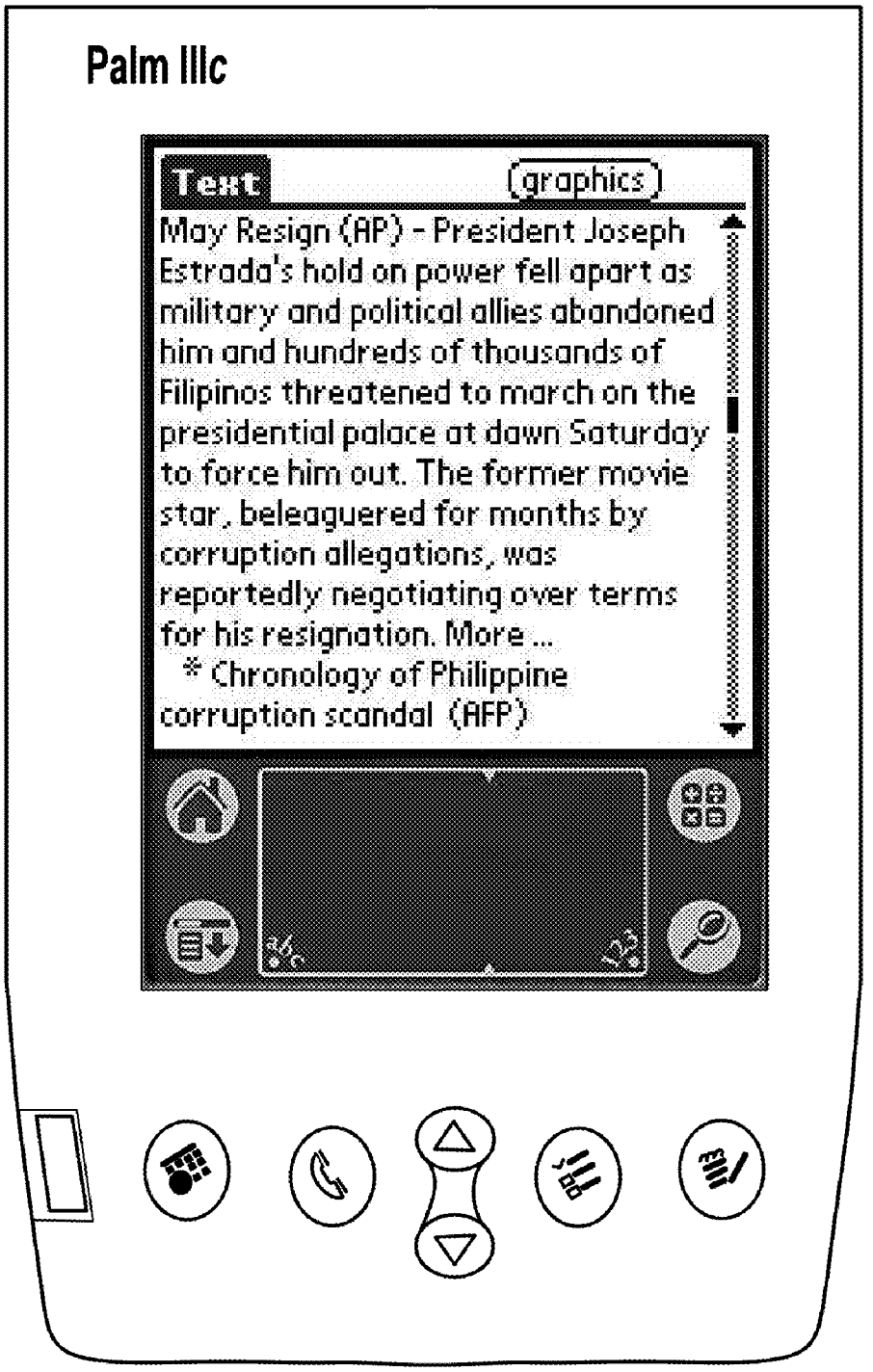
Palm IIIc
Text
graphics
May Resign (AP) - President Joseph Estrada's hold on power fell apart as military and political allies abandoned him and hundreds of thousands of Filipinos threatened to march on the presidential palace at dawn Saturday to force him out. The former movie star, beleaguered for months by corruption allegations, was reportedly negotiating over terms for his resignation. More ...
* Chronology of Philippine corruption scandal (AFP)

FIG. 9B

SCALABLE DISPLAY OF INTERNET CONTENT ON MOBILE DEVICES

RELATED APPLICATIONS

This application is a Continuation of U.S. Non-provisional application Ser. No. 09/878,097, filed Jun. 8, 2001, (issued as U.S. Pat. No. 7,210,099) entitled "RESOLUTION INDEPENDENT VECTOR DISPLAY OF INTERNET CONTENT," which is a Continuation-in-Part of U.S. Non-provisional application Ser. No. 09/825,511, filed Apr. 7, 2001, (Abandoned) entitled "RESOLUTION INDEPENDENT VECTOR DISPLAY OF INTERNET CONTENT," the benefit of the filing dates of which is claimed under 35 U.S.C. §120. U.S. Non-provisional application Ser. No. 09/878,097 further claims the benefit of the filing dates of U.S. Provisional Application No. 60/211,019, filed Jun. 12, 2000, entitled "METHOD AND SYSTEM FOR RESOLUTION INDEPENDENT DISPLAY OF HTML AND XML CONTENT" and U.S. Provisional Application No. 60/217,345, filed Jul. 11, 2000, entitled "METHOD AND SYSTEM FOR SELECTION, RETRIEVAL, AND CONVERSION OF COMPUTER CONTENT TO VECTOR FORMAT FOR RESOLUTION INDEPENDENT DISPLAY," under 35 U.S.C. §119(e). The disclosure of each of the foregoing applications is incorporated by reference in its entirety herein for all purposes.

This application also contains subject matter related to Divisionals (of Ser. No. 09/878,097) U.S. Non-provisional application Ser. Nos. 11/045,649 (issued as U.S. Pat. No. 7,584,423) entitled METHOD, PROXY AND SYSTEM TO SUPPORT FULL-PAGE WEB BROWSING ON HAND-HELD DEVICES, and 11/045,757 (issued as U.S. Pat. No. 7,461,353) entitled SCALABLE DISPLAY OF INTERNET CONTENT ON MOBILE DEVICES, both filed Jan. 28, 2005. This application also contains subject matter related to U.S. Non-provisional application Ser. Nos. 11/735,477 and 11/735,482, both filed on Apr. 15, 2007, 11/738,932 filed on Apr. 23, 2007, 11/868,124 filed on Oct. 5, 2007, and 12/326,092 filed on Dec. 1, 2008.

COPYRIGHT NOTICE

Contained herein is material that is subject to copyright protection. The copyright owner has no objection to the facsimile reproduction of the patent disclosure by any person as it appears in the Patent and Trademark Office patent files or records, but otherwise reserves all rights to the copyright whatsoever.

BACKGROUND OF THE INVENTION

1. Field of the Invention

The invention relates generally to viewing of Internet content on mobile devices, and more particularly concerns to novel processing of Internet and World Wide Web content to scalable forms for resolution-independent rendering and zoom- and pan-enabling the display of content on mobile devices.

2. Description of the Related Art

Text only Internet information browsers began as a project at the CERN, European Organization for Nuclear Research, facility in Geneva Switzerland. From its inception the intent was to provide a mesh or web of access to data with a common user interface. Browsers moved from the academic environment when NCSA, the National Center for Supercomputing

Applications at the University of Illinois in Urbana-Champaign developed Mosaic, an Internet information browser and World Wide Web client.

Internet content is stored in multiple file formats. These formats include HTML (Hyper Text Markup Language) and XML (eXtended Markup Language) as well as graphic file format GIF (Graphics Interchange Format) and JPEG (Joint Photographic Experts Group). These four file formats constitute the majority of Internet content. Font size and resizing display area for content can alter the size of the display of Internet content in existing browsers. The majority of Internet content displays as a flat single resolution with no browser support for zoom.

Much of the Internet content has been designed for display on desktop computers with a single target resolution. Even though HTML has the ability to adapt to changes in screen resolution, major Internet content providers have chosen to create their Web pages using fixed resolution structures, such as tables. This gives them the ability to control the look and feel of their Web sites. This fixed resolution approach has evolved to the point that the fixed resolution layout of Web pages has become the most common method to brand or uniquely identify Web sites. While this fixed resolution approach is good for site branding and product differentiation it does present a daunting technical problem for display of Internet content (designed for desktop computers) on small screen, low resolution, or different aspect ratio devices, such as cell phones and hand held computers.

BRIEF SUMMARY OF THE INVENTION

In accordance with aspects of the invention, mobile devices enabled to support resolution-independent scalable display of Internet (Web) content to allow Web pages to be scaled (zoomed) and panned for better viewing on smaller screen sizes are disclosed. The mobile devices employ novel processing of original Web content, including HTML-based content, XML, cascade style sheets, etc. to generate scalable content. The scalable content and/or data derived therefrom are then employed to enable the Web content to be rapidly rendered, zoomed, and panned. Display lists may also be employed to provide further enhancements in rendering speed.

According to further aspects, the mobile devices employ touch-sensitive display screens that enable users to provide various inputs to control display of content within Web pages. Exemplary user inputs include tap-based inputs to selectively zoom in on columns, images, and paragraphs. Users can also define a window to zoom in on via the touch-sensitive display.

Other features of the present invention will be apparent from the accompanying drawings and from the detailed description that follows.

BRIEF DESCRIPTION OF THE DRAWINGS

The appended claims set forth the features of the invention with particularity. The invention, together with its advantages, may be best understood from the following detailed description taken in conjunction with the accompanying drawings of which:

FIG. **1**A is a block schematic diagram illustrating a first exemplary system infrastructure in accordance with the present invention in which content translation services are performed by a third-party proxy service that translates content requested from a client that is retrieved from one or more network resources into a scalable vector representation and delivers the translated content to the client;

FIG. 1B is a block schematic diagram illustrating a second exemplary system infrastructure in which the translation of content is performed at a content provider's web site and delivered directly to the requesting client;

FIG. 1C is a block schematic diagram illustrating a third exemplary system infrastructure in which content received from one or more network sources is translated into a scalable vector representation at the client;

FIG. 2A is a flowchart illustrating how data is retrieved, processed and transferred in accordance with the system infrastructure of FIG. 1A;

FIG. 2B is a flowchart illustrating how data is retrieved, processed and transferred in accordance with the system infrastructure of FIG. 1B;

FIG. 2C is a flowchart illustrating how data is retrieved, processed and transferred in accordance with the system infrastructure of FIG. 1C;

FIG. 3 is a block schematic diagram illustrating an exemplary architecture corresponding to the proxy server of FIG. 1A;

FIG. 4A is a representation of an exemplary web page has displayed on a conventional browser;

FIG. 4B is a schematic diagram illustrates various objects that are generated based on the HTML code of the web page of FIG. 4A;

FIG. 4C is a schematic diagram illustrating a set of vectors and bounding boxes corresponding to the objects generated in FIG. 4B;

FIG. 4D is a schematic diagram illustrating how various vectors and bounding boxes may be defined in accordance with the invention;

FIG. 4E is a representation of the web page of FIG. 4A after it has been offset and scaled in accordance with the invention;

FIG. 4F is a schematic diagram illustrating new datum points and bounding boxes corresponding to the scaled and offset web page;

FIG. 4G is a schematic diagram illustrating new vectors and bounding box parameters for a pair of objects in the scaled and offset web page;

FIG. 5 is a flowchart illustrating the logic used by the invention when translating content into a scalable vector representation of that content;

FIG. 6 is a flowchart illustrating client-side operations that are performed to create a rendered display page based on the translated content the client receives and user-input;

FIGS. 7A and 7B are representations of a nominal and a zoomed in column view of an exemplary web page as they might appear on a Palm device;

FIGS. 8A and 8B are representation of nominal and zoomed in view of an exemplary graphic image as they might appear on the Palm device;

FIGS. 9A and 9B are representations of a nominal and zoomed in view of a text portion of a web page as they might appear on the Palm device; and

FIG. 10 illustrates an exemplary computer system that may be used for implementing various aspects of embodiments of the invention.

DETAILED DESCRIPTION OF THE INVENTION

Apparatus and methods are described for creating resolution independent vector display of Internet content to allow it to be scaled (zoomed) larger and smaller for better viewing or to fit any resolution or screen size. In addition, infrastructure and methods are provided for delivering such content to clients.

In the following description, for the purposes of explanation, numerous specific details are set forth in order to provide a thorough understanding of the present invention. It will be apparent, however, to one skilled in the art that the present invention may be practiced without some of these specific details. In other instances, well-known structures and devices are shown in block diagram form.

The present invention includes various operations, which will be described below. The operations of the present invention may be performed by hardware components or may be embodied in machine-executable instructions, which may be used to cause a general-purpose or special-purpose processor or logic circuits programmed with the instructions to perform the operations. Alternatively, the operations may be performed by a combination of hardware and software.

The present invention may be provided as a computer program product that may include one or more machine-readable mediums having stored thereon instructions, which may be used to program a computer (or other electronic devices) to perform a process according to the present invention. The machine-readable medium may include, but is not limited to, floppy diskettes, optical disks, CD-ROMs, and magneto-optical disks, ROMs, RAMs, EPROMs, EEPROMs, magnetic or optical cards, flash memory, or other type of media/machine-readable medium suitable for storing electronic instructions. Moreover, the present invention may also be downloaded as a computer program product, wherein the program may be transferred from a remote computer (e.g., a server) to a requesting computer (e.g., a client) by way of data signals embodied in a carrier wave or other propagation medium via a communication link (e.g., a modem or network connection). Accordingly, herein, a carrier wave shall be regarded as comprising a machine-readable medium.

Client Overview

According to one embodiment, an ultra-thin client-side viewer provides the graphics, linking, caching, and function handling capabilities necessary for extending the web to almost any platform. It is designed as a lightweight browser (micro-browser) running directly on device operating systems. In alternative embodiments, the client-side viewer may be deployed as a standard browser plug-in, or Java applet for extending browser functionality. In one embodiment, the client-side viewer attains its small size and efficiency by taking advantage of the power of SVF (Simple Vector Format) to describe almost any current web content. SVF files can be handled with a tiny fraction of the client code required by normal web browsers because current browsers must interpret a large and growing number of file types and their idiosyncrasies. SVF was originally designed to handle a superset of the most commonly used file formats in the complex world of CAD. It can accommodate not only new graphical functions, but the storage and transfer of almost any foreseeable new functional capability. SVF has been under consideration by the W3C (World Wide Web Consortium) for adoption as a standard for vector content on the World Wide Web.

By working tightly with a server-side content translator, web content and functionality can be passed seamlessly to the end user platform without any degradation in the look or feel of the output. In addition, because the resulting file graphics are handled as vectors, the end user can control real time changes in the size of text and graphics as well as what portion of the file is viewable in the display. This "zoom and pan" capability, familiar to CAD and other vector content software users, adds dramatically to the usability of non-standard display sizes. For very small displays, real time zooming and panning allows the user to see graphics and text at sizes that make them easily readable, and then "back up" to view an

entire page for context or pan in any direction for navigation. Because the client-side viewer manipulates vectors, there is no loss in quality as the display is zoomed. The graphics rendering engine within the client is so efficient that file manipulation happens in a fraction of a second. There is no perceptible wait for the user as the file is resized, or the window is repositioned. Content created for one display resolution now can be sized, real time, for any other display without degradation. Besides making small displays eminently usable, this technology extends web content into some surprising new arenas. For example, it enables normal desktop displays to be effective for individuals with visual impairment, or for content designed for 640×480 standard PC monitors to be shown without degradation on web billboards now appearing in cities like Seattle and San Francisco.

With a client of such extraordinary power packed in a tiny footprint, end user device manufacturers can free up valuable memory space for pre-fetching, caching and pre-loading content, dramatically improving performance for use in low bandwidth and portable applications. In the example of a wireless handheld device where expensive flash memory must be used instead of more cost effective bulk storage technology, the difference between consuming 10's of megabytes of flash memory with a standard browser versus running the client-side viewer described herein is dramatic.

Those "saved" megabytes of memory are now available for impressive interfaces, caching of often used content, and pre-fetching of intelligently selected linked files or pre-loading of content for targeted applications. For example, in a mapping application, the map tiles surrounding the viewed map could be downloaded and stored while the user was working with the initial tile, enabling an experience remarkably free from the current frustrations of waiting for a new map to be transferred for even the smallest change in magnification or coverage. If the user knows ahead of time what city they will visit on a business trip, maps and additional travel information in great detail could also be pre-loaded using a high bandwidth connection at home or in the office before heading out to shop or conduct business in the city. Additionally, SVF is a more efficient way to store web content. Resulting content files are reduced in size by anywhere from 20 to 80 percent over their source. SVF is also very compressible. With target file size reduction in the range of 90%, SVF files can take up as little as $1/10^{th}$ the space of the web files in current use. This means that pre-translated content can be moved up to 10 times the rate of current web pages, and as much as 10 times as many pages, maps, stock charts, etc. can be stored for instant retrieval on the hand held platform as can be handled with current web technology.

When used on content created natively in SVF, additional capability can be extended to the client-side viewer.

Graphing the performance of stocks over time is only one use of SVF's ability to handle streams of data. Handling the output from financial systems, transactional systems, ERP packages, and CRM systems becomes easier and more flexible. Of course, systems integrators don't have to use these powerful capabilities to start with. If the target system provides web interfaces, these can be viewed, as designed, with no additional software to write, and no changes to the design or layout of the interface.

Server Overview

Enabling the client-side viewer to be so small and powerful is the server-side content translator. The server-side content translator rapidly translates Web content to SVF, compresses and encrypts the SVF results if desired, and transfers the vector formatted results to the client-side viewer. Alternatively, SVF files can be cached or stored in a file system for fetching and transfer at a later time. Pre-translated or cached content transfers are significantly faster as no conversion overhead is incurred, and file sizes are reduced using the more efficient SVF. Combine that with standard compression algorithms selectable for use with the client-side viewer for additional performance improvements.

During the translation process, and in the process of serving cached, pre-translated, or native SVF content, output files are "streamed" to the client-side viewer. Although this does not decrease the total time for file transfer, it can significantly improve the effective system performance for the end user. Content can be selectively streamed, with text and links coming through first, followed by graphic images and other content, for example. Should the user be accessing a link, rather than having interest in the entire file served, links can be selected early in the transfer and the next file download started immediately. In addition to streaming, the server-side content converter may also layer the content by type. This means that text can be put in one layer, links in another, GIF images in another, Javascript in another and so on. Layers can be turned on or off depending upon client capabilities, making files for less capable clients, or for users interested in a reduced functionality, higher transfer performance mode to be handled automatically.

All operational modes may be controlled through an administrative interface or accessible through a straightforward API (Application Program Interface). Furthermore, the system works with existing firewalls and within standard security protocols. In more secure modes, the server-side content converter and the client-side viewer may operate using Public/Private key authentication and encryption.

Exemplary System Infrastructures

In the following paragraphs, a description of three exemplary system infrastructures is provided. Schematic illustrations of these system infrastructures are shown in FIGS. **1**A, **1**B, and **1**C. It is noted that like-numbered components in these Figures perform substantially the same function. Therefore, any discussion of the functions of a component with reference to one or more of the infrastructures generally may apply to the other infrastructures as well, unless specifically noted otherwise.

A first of exemplary system infrastructure **10**A for implementing the invention is shown in FIG. **1**A. Infrastructure **10**A enables various clients, including wireless devices such as a cellular phone **12**, a wireless-enabled PDA **14**, and a wireless-enabled laptop computer **16**, as well as landline computers **18**, **20**, and **22**, to request content that is accessible via a network such as the Internet **24** to be retrieved from selected network resources, including web servers **26** and **28** and an FTP site **30**, wherein the content is translated into a scalable vector representation (e.g., SVF, also referred to herein as "vectorized content") through use of a proxy server **32** and sent to the requesting client. Upon being received by the client, the vectorized content is processed and rendered using a thin client to enable a user to view the content on the client device.

With reference to the flowchart of FIG. **2**A, the foregoing process is initiated by a client in a block **100**, wherein the client submits a request to proxy server **32** to retrieve and convert selected content. As depicted by a transfer path **34**, this comprises sending data **36**, which includes content network location indicia from which the content can be retrieved and proxy server network location information by which the content request may be delivered to over Internet **24** to proxy server **32**. Typically, it will be desired to retrieve a particular web page. Accordingly, the content network location indicia will comprise a URL (uniform resource locator) for the web

page. Similarly, the proxy server network location information may also comprise a URL corresponding to a network access point for the proxy server. Optionally, the location information may comprise a network IP address for one or both of the content location and the proxy server location. If the content is to be retrieved from an Internet resource, the request will typically be sent using the HyperText Transfer Protocol (HTTP) over the TCP/IP transport.

Next, in a block **102**, the request is received by the proxy server and the proxy server checks its cache to see if it already has the request content in its cache. If it does, it sends this cached content back to the client. If it does not have the requested content cached, the proxy server sends out a request to retrieve the content from the network resource. For illustrative purposes, it will be assumed for the present example that the desired content comprises a web page that is stored on web server **26**. Typically, when the requested content comprises a web page, the content may be retrieved using conventional web content retrieval techniques, such as that employed by various modern browser clients, including Netscape Navigator and Internet Explorer. This generally comprises providing routing information, such as the URL for the web page (URL **38**) to routing services provided by Internet **24**, which routes the request to an appropriate network resource (e.g., web server **26**), as depicted by a transfer path **40**.

Typically, the URL will correspond to a web page whose content is stored by the web server in an HTML (HyperText Markup Language) document comprising HTML code and embedded text content, in addition to other optional content languages, that may contain references to other objects (e.g., HTML documents and graphic image files) stored locally to the server or stored on a remote server. For example, the HTML content corresponding to a single-frame web page is often stored in a single file, while multiple-frame web pages may comprise content that is stored in a single file or in multiple files. These files may be stored locally on the web server (e.g., on one of the server's hard disks), or on a local storage device connected to the web server via a local area network (LAN), such as a network attached storage (NAS) filer. Optionally, some of the web page's content may comprise one or more documents that are stored at remote locations that may be accessed via a WAN (wide area network) or the Internet.

HTML is a standardized language that describes the layout of content on a web page, and attributes of that content. This layout and attribute information is defined by sets of tags contained in HTML code corresponding to the page. The tags define various HTML layout and display information, including tables, paragraph boundaries, graphic image positions and bounding box sizes, typeface styles, sizes, and colors, borders, and other presentation attributes. A portion or all of a web page's text content may be contained in the parent HTML document corresponding to the URL. In addition to basic HTML, web page documents may contain XML (eXtensable markup language) code, as well as scripting language code, such as javascript. However, for simplicity, any documents containing web page content other than only graphic content that are discussed herein will be referred to as HTML documents.

In addition to HTML and other markup and scripting language content, it is very common for web pages to include graphical content. In general, graphical content is usually stored in an image file or files that are external from the parent HTML document for the web page. For example, the parent HTML document may contain one or more embedded image tags that reference the location where those images are stored. As before, the graphic images may be stored locally, or may be stored on remote servers that are accessed by the web server via a WAN, or the Internet. These files will typically comprise data stored in one of several well-known graphic formats, including bitmap files (BMP), GIF (Graphics Interchange Format) files, and JPEG (Joint Photographic Experts Group) files.

In response to receiving the request for content, web server **26** begins sending a parent HTML document **42** back to proxy server **32** in a block **104**. In a block **106**, the HTML content of the parent HTML document is parsed to search for references to external objects such as HTML frames and graphics. In a decision block **108**, a determination is made to whether any references are found. For each reference to an external object that is found, proxy server **32** requests to have the object retrieved from an appropriate network resource (e.g., a web server) in a block **110**, and data corresponding to the object is transmitted back to the proxy server, as depicted by locally accessible HTML documents **44** and graphic images **46**, as well as remotely accessible HTML documents **48** and graphic images **50**, which may be accessed via web server **28**. If the external object is a graphic image, there is no further processing of the object at this point. If the object is an HTML document, the functions provided by blocks **106** and **108** are repeated. Generally, this set of processing functions is repeated iteratively until all of the external objects are retrieved. However, as described below, there will be some instances in which certain objects will be retrieved at a later point in time. In addition to content stored on web servers that are accessed using HTTP, content may also be retrieved from various network sites using the File Transfer Protocol (FTP), such as FTP documents **51**, which are accessed via FTP server **30**.

In general, HTML documents and graphic files will be sent as packetized data streams using HTTP over one or more TCP/IP network connections, wherein the data streams will usually be asynchronous. Retrieval of HTML documents and graphic files corresponding to the embedded references will usually require additional transfer time. Furthermore, graphic content oftentimes comprises significantly larger file sizes than HTML content, leading to significant transfer times in some instances. For simplicity, the transfer of the various HTML documents and graphic files for the content request are depicted by HTML documents **52** and graphic documents **54**, which are transferred over a transfer path **56**.

When the HTML documents and graphic content are received by proxy server **32**, a scalable vector representation of the web page is generated in a block **114** by an HTML translator **58**. In brief, HTML translator **58** translates HTML, XML, and cascaded style sheet (CSS) layout content into a scalable vector representation, such as SVF. Details of the HTML translation process are contained below. In addition, the graphic images are converted into a compressed bitmap format in a block **116** by a graphics translator **60**. The vectorized content **62** and compressed bitmaps **64** are then streamed back to the client (i.e., computer **18**) in a block **118**, as depicted by a transfer path **66**. In one embodiment, the content portions are sent in separate streams using multiple connections. In another embodiment, the content portions are sent via a multiplexed stream using a single connection. As the vectorized content and compressed bitmap data are received by the client device, they are processed by a thin client **68** running on the client device, whereby a representation of the original web page content may be rendered on the client device's display screen at various user-selectable scaled resolutions and pan offsets in a block **120**, thereby

enabling a user to more clearly see an overview or details in the web page. Further details of the client side processing are provided below.

As discussed above, wireless clients may also access the vectorized network (e.g., web site) content provided via proxy server **24**. The majority of this process is identical to that described above for land-line clients (e.g., computers **18**, **20**, and **22**), except for provisions required for sending data to and receiving data from wireless devices. In general, most wireless devices will access the Internet via a wireless service provider (i.e., a wireless telecommunications carrier) that is particular to that wireless device. Accordingly, a portion of the transmission path to and from proxy server **24** will comprise infrastructure provided by that service provider and/or shared with other service providers. For simplicity, this infrastructure is shown as a cellular tower **70** and a service provider data center **72**, although it will be understood by those skilled in the art that the connection path may comprise additional infrastructure components, including appropriate gateways and routers, that enable wireless devices to access proxy server **24**.

In some implementations, there will be no special formatting/protocol services that need to be performed by proxy service **24**—from the viewpoint of the proxy service, it will be immaterial whether the client is a land-based or wireless client; the special handling provisions for wireless devices will be handled entirely by the service providers infrastructure transparently at both ends of the communications path. In other instances, it may be desired or necessary to reformat the data content delivered to the wireless device at the proxy service. This will generally be dependent on the particular wireless protocol used, and what services are provided by the service provider for the wireless client.

Currently, in the United States, wireless clients generally access Internet **24** by using the Wireless Application Protocol (WAP). In Japan, the most popular access means is NTT DoCoMo's i-Mode wireless protocol. In addition to these wireless standards, new standards are anticipated to be in force in the near future, including NTT DoCoMo's FOMA (Freedom of Mobile Multimedia Access), which is transported over W-CDMA (Wideband Code Division Multiple Access), and CDMA-2000. For the purposes of the invention herein, it will be understood that those skilled in the mobile telecommunications arts will be knowledgeable about any particular format and/or transport protocol requirements that pertain to the particular protocol that is to be used.

A second exemplary system infrastructure **10**B for implementing the invention is shown in FIG. **1**B. As will be readily recognized, much of infrastructure **10**B is similar to infrastructure **10**A; however, rather than have a separate proxy server perform the proxy functions (retrieve and translate content), these functions are performed on machines operated by the web site in infrastructure **10**B.

The logic implemented by the invention when providing content to a client using infrastructure **10**B is illustrated in the flowchart of FIG. **2**B, wherein the process begins in a block **101** in which the client sends a content request **39** directly to the network site (e.g., web server **26**), as depicted by a transfer path **41**. In a block **103**, HTTP negotiations are performed to determine the format the content is to be delivered in. For example, the request may contain indicia identifying the type of content requested, such as an SVF MIME type (e.g., image/vnd.svf). This is to inform the web server that the request is for specially-formatted content rather than conventional content. The server first checks to see if it already has cached the requested content. If it has, it sends the content to the requesting client; otherwise, it retrieves the parent HTML document in a block **107**. It then performs processing steps in blocks **107**, **109**, and **111** to retrieve content referenced through embedded tags in a manner substantially similar to that discussed above with reference to respective blocks **106**, **108**, and **110**. The primary difference in this instance is that the web server does not receive requests from or send documents to a proxy server—rather, the content is retrieved and processed at the web server, wherein the retrieved content may be stored local to the web server or retrieved from a remote server in a manner similar to that described above.

As before, the retrieved HTML documents are translated into scalable vector representations by HTML translator **58** in a block **114**, while the graphic images are translated into a compressed bitmap format by image translator **60** in a block **116**, as depicted by vectorized content **62** and bitmap content **64**. The vectorized content and bitmap content are then streamed from the web server to the client in a block **119**, as depicted by a transfer path **67**. Upon arriving at the client, the vectorized content and bitmap content are processed, scaled, and rendered on the client in a block **120**.

A third exemplary system infrastructure **10**C for implementing the invention is shown in FIG. **1**C. In this configuration, the proxy functions are performed at the client. As shown by a block **113** in FIG. **2**C, the process for providing vectorized content to a client in accordance with infrastructure **10**C begins in a block **113**, in which the client sends a content request **37** to a network site, such as web server **26**, via Internet **24**. In response, the network site retrieves the parent HTML document and sends it to the requesting client in a block **115**. In a manner similar to that discussed above with reference to blocks **106**, **108**, and **110** of FIG. **1**A, the client first parses the parent HTML document searching for embedded references to external objects and retrieves these objects, whereupon the embedded reference search is performed on the newly retrieved document until all of the content corresponding to the original content request has been retrieved. This content is depicted by HTML documents **52** and image files **54**, which are sent from the network site to the client via a transfer path **69**. At this point, the client performs translations on the HTML content and the graphic image content that are substantially similar to that performed by the proxy server in FIG. **1**A or at the web site in FIG. **1**B, as provided by blocks **114** and **116**. The vectorized and image content is then processed and scaled by thin client **68** in a block **120**, as depicted by device output **71**.

Attention now is focused on the functionality provided by proxy server **24** in system infrastructure **10**A of FIG. **1**. Fundamentally, the proxy server functions as a proxy. It accepts requests for content from client devices as full URLs using standard HTTP mechanisms carried over a multiplexed TCP connection. Standard HTTP content negotiations features specify the formats in which content is to be delivered (SVF, bitmap, and possibly others, which can be handed off to cooperating client-side display software). As described in further details below, in some embodiments the proxy server appears for the client as a normal proxy (that is, the client knows it is retrieving content via the proxy), while in other embodiments the proxy is transparent to the client.

The proxy server responds to client content requests by delivering content in one of the requested formats, by retrieving the content in an appropriate format from its cache, or from an upstream content source (again using standard HTTP content negotiation features), or by translating upstream content from a supported original format to SVF or the client bitmap format.

Requests from the server installation to its cache and from the cache to upstream content sources are made in HTTP

carried over TCP using simple straightforward Web content requests. For example, requests from clients to the proxy server comprise HTTP proxy requests (e.g., "GET http://www/xyz.com/some_page.html HTTP/1.0 . . . ") carried over TCP or over a lightweight multiplexing protocol over TCP. The multiplexing protocol allows the server to push image thumbnails to the client before the SVF stream is available, as well as offering a channel for control and status information, more simultaneous channels than the client operating system may support, and a mechanism for prioritizing information flow from server to client under loose client control. In addition to HTTP requests, the proxy server architecture supports other user-level protocols, such as FTP and Gopher.

Details of some of the primary components of the proxy server architecture are shown in FIG. **3**. Internally, the proxy server comprises a suite of coordinated processes connecting to upstream content through an HTTP cache **74**. In one embodiment all functions except caching are performed in a single process, wherein multiple threads are used to effect asynchronous I/O. Separate processes communicated via persistent multiplexed connections carried over the most efficient reliable transport available (e.g., Unix sockets over single processor and symmetric multiprocessor (SMP) computers; TCP sockets between separate computers). All processes are capable of servicing multiple requests simultaneously. No process maintains client state outside the context of a single request, so all components can be repeated and load balanced across multiple CPU's of an SMP computer or across separate computers on a LAN.

The various content translators used by the proxy server accept (via HTTP PUT) or request (driven by HTTP proxy GET/POST) content in supported, but client-unsupported, formats; and return (via HTTP PUT or GET/POST response) one or more representations of that content in a client-supported format. In the embodiments illustrated in FIGS. **1**A-C, two translators are used: HTML translator **58** and image translator **60**. Future content types may be accommodated by new translators, by extending existing translators to cover the new content types, or by extending the client's capabilities. Standard HTTP content negotiation mechanisms are used to inform the proxy server of the client's capabilities and expectations on each request.

Managers at the proxy server coordinate the operations of other components. Two managers are presently defined; a client manager **73** that handles client proxy requests, and a request manager **75** that handles unproxied HTTP requests from other services. The managers accept requests, attempt to service them from HTTP cache **74**, and drive HTML translator **58** and image translator **60** when content does not match the clients' requirements. Managers also handle translator requests for inline content (e.g., image dimensions for page layout), and push translated content into HTTP cache **74**. Additionally, the client manager coordinates delivery of primary and inlined content, and provides process and status information to the clients.

As discussed above, HTML translator **58** creates a scalable vector representation of the original HTML content of a requested web page. In order to better explain how translation of HTML content is performed, one embodiment of a translation process is described below as applied to an exemplary web page. In addition, details of conventional web page client and server-side processing are provided so as to clarify how web content is laid out during a pre-rendering process on the client.

FIG. **4** shows a representation of a web page **210** served from an exemplary stock brokerage Internet web site as it would appear when rendered on a modern Internet browser, such as Microsoft's Internet Explorer or Netscape's Navigator. Web page **210** is exemplary of many web pages that implement frames, and includes two adjacent frames **212** and **214**. A logo graphic object **216**A is displayed at the top of frame **212**, which additionally includes a "MARKETS" text header **218**A, an "INVESTMENTS" text header **220**A, and a plurality of links with overlaying graphic objects, including a "DOW" link **222**A, a "NASDAQ" link **224**A, an "OPTIONS" link **226**A, a "CHARTS" link **228**A, a "MUTUAL FUNDS" link **230**A, a "IRA, 401K OPTIONS" link **232**A, and a "TAX INFORMATION" link **234**.

A horizontal group of links **236** is disposed at the top of frame **214**, and includes a "QUOTES" link **238**A, a "HOT PICKS" link **240**A, a "CALENDARS" link **242**A, and a "NEWS" link **244**A. An advertisement banner **246**A is displayed just below the horizontal group of links and just above a "NEWS SPARKS MARKET" headline **248**A. Frame **214** also includes a pair of graphic image objects, including a DOW chart **250**A and a NASDAQ chart **252**A. A set of user input objects is disposed adjacent to DOW chart **250**A within a graphic object **254**A, including an "ACCOUNT #" input box **255**A, an "ACCESS CODE" input box **256**A, and a "LOGIN" button **257**A. In addition to the foregoing objects, frame **214** also includes text objects **258**A and **260**A.

An HTML listing corresponding to web page **210** is presented below as LISTING 1. Note that LISTING 1 sometimes refers to object descriptions and link paths rather than the text or path location of actual objects for simplicity, and that other elements commonly found in HTML pages, such as META entries, are omitted for clarity.

LISTING 1

```
1.  <html>
2.  <head><title>"MARKET HOME"</title></head>
3.
4.  <body bgcolor="#FFFFFF" link="0033CC" vlink="0033CC">
5.
6.  <frameset cols="25%,75% frameborder=0 border=0>
7.  <frame>
8.  <align=left><align=top>
9.  <img src="/directory path/logo.gif" align = left border="0" height="80" width="100">
10. <br><br>
11. <t3>TEXT HEADER #1 align=left</t3><br>
12.
13. <table width="90%" border=0 cellspacing=10 cellpadding=0 bgcolor="#000000"
14. align=center>
15.     <tr>
```

-continued

LISTING 1

```
16.                     <a href=”URL or path for LINK #5” <img src=”/directory
17.                     path/GRAPHIC#2” height=”50” width =”150></a>
18.         <tr>
19.                     <a href=”URL or path for LINK #6” <img src=”/directory
20.                     path/GRAPHIC#3” height=”50” width =”150></a>
21.         <tr>
22.                     <a href=”URL or path for LINK #7” <img src=”/directory
23.                     path/GRAPHIC#4” height=”50” width =”150></a>
24.         <tr>
25.                     <a href=”URL or path for LINK #8” <img src=”/directory
26.                     path/GRAPHIC#5” height=”50” width =”150></a>
27.   </table>
28.         <br>
29.                     <t3>TEXT HEADER #1 align=left</t3>
30.         <br>
31.   <table width=”90%” border=0 cellspacing=10 cellpadding=0 bgcolor="#000000"
32.     align=center>
33.         <tr>
34.                     <a href=”URL or path for LINK #9” <img src=”/directory
35.                     path/GRAPHIC#6” height=”50” width =”150></a>
36.         <tr>
37.                     <a href=”URL or path for LINK #10” <img src=”/directory
38.                     path/GRAPHIC#7” height=”50” width =”150></a>
39.         <tr>
40.                     <a href=”URL or path for LINK #11” <img src=”/directory
41.                     path/GRAPHIC#8” height=”50” width =”150></a>
42.
43.   </table>
44.   </frame>
45.
46.   <frame>
47.
48.   <table>
49.         <tr>
50.                     <table width="100%" border=0 cellspacing=15 cellpadding=0
51.                       bgcolor="#000000" align=center>
52.                 <tr>
53.                     <td><a href=”URL or path for link#1”> alt=”QUOTES”</a>
54.                     <td><a href=”URL or path for link#2”> alt=”HOT PICKS”</a>
55.                     <td><a href=”URL or path for link#3> alt=”CALENDERS”</a>
56.                     <td><a href=”URL or path for link#4>alt=”NEWS”</a>
57.   </table><br>
58.           <br>
59.                     <img src=”URL for GRAPHIC #9” align=center
60.                       border=”0” height=”80” width=”325”>
61.         <br><t1>HEADLINE TEXT>/t1>
62.         <table>
63.                 <Colgroup span=”2”>
64.                     <Col width = “400” align=“center”>
65.                     <Col width = “200” align=”center”>
66.                     <tr><td>
67.                         <img src=”/directory path/GRAPHIC #10” align = center
68.                         border=“0” height=”180” width=”350”>
69.                     <td>
70.     /* INPUT FOR ACCOUNT NUMBER AND ACCESS CODE */
71.         <SCRIPT LANGUAGE =”Javascript”>
72.     <!---
73.                     [Javascript variable declarations]
74.                     [Javascript functions to enable login] ---!>
75.     </SCRIPT>
76.             <table>
77.                 <td>
78.                     <img src=”/directory path/GRAPHIC #11” align = center>
79.                     <table width=”150” height=”25”>
80.                     <td>
81.                     <font size=-2 face="arial,helvetica,verdana">Account #</font>
82.                     <tr><input type=text name="USERID" maxlength=9 size=20>
83.                     <tr><font size=-2 face="arial, helvetica">Access Code:</font>
84.                     <tr><input type=password name="PASSWORD" maxlength=10 size=20
85.                         onKeyDown="SuppressEnterBell(event)"
86.                         onKeyPress="SuppressEnterBell(event)"
87.                         onKeyUp="SubmitOnEnter(event)">
88.                     <br> 
89.                     <br><input type="button" value="Login"
90.                     OnClick="ProcessForm( )">  <input type="reset">
```

-continued

LISTING 1

```
91.                     <br> 
92.                     </td>
93.                     </table>
94.             </table>
95.     <tr>
96.                     <img src="/directory path/GRAPHIC #12" border="0
97.                      height="200" width="350">
98.     <tr>
99.                         <p>TEXT FOR TEXT OBJECT #1</p><br>
100.                        <p>TEXT FOR TEXT OBJECT #2</p>
101.            </table>
102.        </frame>
103.    </frameset>
104.    </html>
```

Web page documents comprise HTML code that is parsed, interpreted, and rendered by a browser. An HTML document comprises a plurality of HTML "markup" elements (tags) with corresponding attributes, that are used to describe the layout and formatting of various objects, including plain text and graphic objects, embedded between tag pairs. Exemplary elements include text tags (e.g., for bolding text), links (e.g.,), formatting (e.g., for creating a new paragraph, graphical (e.g., <img src="name">), wherein "name" defines an absolute or relative location at where an image is stored, tables (e.g., <table></table>) creates a table, and forms (e.g., <form></form> creates all forms).

As of Netscape Navigator 3.0 (and other later browsers), web pages could include frames. When using frames, the display page is divided into multiple framed areas. Framing enables a single display page to include source code from several HTML documents (one for each frame) or optionally, enables a single document to include more complicated grouping of contents whereby different content groups are contained in separate frames. Frames are commonly found on the web pages at sites that display a great deal of text and graphical content, such as MSN.com, ESPN.com, and USA-Today.com.

With reference to the flowchart of FIG. **5**, the process for translating the HTML content into a scalable vector representation proceeds as follows. The process is initiated when the proxy server receives the HTML corresponding to the parent document (and frame documents, if appropriate), whereupon a pre-rendering parsing of the HTML is performed to determine where to place the various objects on the display page in a block **150**. For example, elements such as tables, column definitions, graphic images, paragraphs and line breaks are identified. If frames are included, each frame is examined in the sequential order it appears in the HTML document, or the order in which the HTML documents corresponding to the frames in a frameset are downloaded to the browser. During further processing, the actual objects are rendered in their respective positions. Some of these objects are rendered almost immediately, such as plain text, while other objects, such as graphic objects, must first be retrieved prior to being fully-rendered. With respect to tables, there are some instances in which all of the objects corresponding to the cells in the table must be retrieved prior to rendering any of the table, while a well-designed table can be rendered incrementally. For example, by using Column grouping, the format of the corresponding table can be quickly determined by the browser. In some instances, one or more bitmaps may actually need to be fetched before the page layout can be determined.

Next, in a block **152**, the content is separated into objects based on logical groupings of content portions and a page layout is built using bounding boxes that are produced for each object. As the primary HTML document is parsed, logical groupings of content will emerge. For instance, text content contained within paragraph tags   forms a logical grouping of text content. In essence, a logical grouping means the content should appear together as a logical group, such as within a substantially rectangular outline, in the rendered page. Other logical groupings include frames, table content, row content, single line entries such as headlines and headers, and user-interface objects, as well as graphic layout objects, such as separator bars, and graphic images. In addition to logically grouping content into objects, a "bounding box" is defined for each object. In general, the bounding box defines an outlined shape within which the content (text or graphic image) will appear. In most instances, the bounding box will be substantially rectangular in shape. However, bounding boxes comprising more complex shapes may also be produced.

In further detail, the following explains how objects corresponding to graphic images are produced. In HTML, objects comprising graphic content are identified by an <img src="/local directory path/graphic image file" (for a local graphic image) or "URL" (for a remote graphic image)> or <object> or other tags. In the foregoing tag, local graphic images are typically stored on the same server as the web page, or another computer that is local to the site's server, and generally are located through a local directory path (absolute or relative to the location of the present page) that points to the graphic image file. Remote images are those images that are stored on servers at sites that are remote to the web server. For example, with reference to LISTING 1, when the parser encounters line 9, the browser identifies that data comprising a graphic image corresponding to logo graphic object 1 will be arriving (or may have already been received), and the displayed image is to have a height of 80 pixels and a width of 100 pixels. The location of each object on a display page will be dependent on previous HTML layout elements, such as tables, paragraphs, line breaks, and other graphic objects. The size and location of the other graphic objects (i.e., graphic objects #2-12) on the page are determined in a similar manner. The HTML code for these objects are shown in lines 16, 19, 22, 25, 34, 37, 40, 59, 67, 78 and 96, respectively. As identified in the HTML code, data corresponding to graphic objects #9 (advertisement banner **46**A) is forwarded to the browser from an external site (as indicated by the URL to GRAPHIC #9), while graphic objects 1-8 and 10-12 are sent from the web site the parent HTML document is sent from.

In a similar manner, the foregoing technique is applied to the HTML code in the primary document to identify other types of objects as well. In addition to parsing the primary HTML document, similar processing is performed on referenced documents, such as documents that include frame content that is defined and stored separate from the primary HTML document.

A representation of the results of the functions performed in block **152** are shown in FIG. **4**B. In the Figure, objects corresponding to the original content of FIG. **4**A are shown with an appended "B" that is added to each object's root reference number, wherein the root reference number for an object is that same as the logically grouped content in FIG. **4**A that it corresponds to, e.g., an object **248**B is generated for "NEWS SPARKS MARKET" headline **248**A, etc.

Next, in a block **154**, the page layout is defined based on the bounding boxes. In actuality, generation of the page layout information is performed in conjunction with defining the boundary boxes for the objects, wherein the location of a given object is based on the location of other related (e.g., if within a table) or non-related objects corresponding to HTML content that have been previously parsed. For example, the location of a given paragraph will depend on the other content for the page that are listed prior to the definition for the paragraph in the primary HTML document or referenced document, if applicable. As the HTML content of the primary and any referenced HTML documents are parsed, the page layout is generated based on the various HTML tags and the content embedded between tag pairs and/or referenced by a tag pair statement (e.g., graphic images).

As will be recognized by those skilled in the art, the functions performed in blocks **150**, **152**, and **154** are commonly performed by conventional browsers during a pre-rendering process. In some browsers, these functions are performed by the Mozilla rendering engine, which comprises open source software that is readily available for use by developers. At present, the software for the Mozilla rendering engine may be accessed via the Internet at www.mozilla.org. Accordingly, in one embodiment, the present invention uses core functionality provided by the Mozilla rendering engine source code to perform the functions of block **150**, **152**, and **154**.

At this point, the present invention deviates substantially from the prior art by using the various object layout data generated during the pre-rendering process to generate a scalable vector representation of the original page content. First, in a block **156**, a datum point is defined for the page and the bounding box for each object. For example, as shown in FIG. **4**C, a rendered page datum **262** is defined to be coincident with the upper left hand corner of the display frame of the rendered page for the web page. Generally, any point on the page may be used as the page datum—the only requirement is that the page datum that is selected is used consistently throughout the process. The use of the upper left hand corner of the display frame is advantageous since the location of the first object encountered in the HTML code for a page is located relative to this corner.

In general, the datum points for each object may also be located any place on the object, as long as the object datum points are used in a predictable manner. For example, as depicted in FIG. **4**C, various datum points for corresponding objects are defined to be coincident with the upper left hand corner of the bounding box for that object, wherein the object's datum point shares the root reference number of the object with an appended "C."

Once the page's datum point and an object's datum point are known, a vector between these points is generated for each object in a block **158**. With reference to FIG. **4**D, in one embodiment, wherein the page datum point corresponds to the upper left and corner of the display frame and is assigned an XY value 266 of 0,0, the vector for a given object may be stored as the XY value of the datum point of that object relative to 0,0, such as a value of 150, 225 (ref. num. **268**) for a vector **250**D pointing to an object datum **250**C, and a value of 150, 425 (ref. num. **270**) for a vector **252**D pointing to an object datum **252**C. In another embodiment, each vector may be stored as XY data relative to a 0,0 datum point corresponding to the upper left hand corner of the frame the object belongs to. For example, a vector **250**D' from a frame datum **214**D to object datum **250**C is stored as 20, 200 (ref. num. **268**'), while a vector **252**D from frame datum **214**D to object datum **252**C is stored as 20, 425. In this embodiment, offset information for each frame relative to a known datum will also be stored, as depicted by a vector **214**D.

The scalable vector representation is completed in a block **160**, wherein a reference is created for each object that includes or links an object's content and attributes, such as object type (e.g., text, image), object typeface, and boundary box parameters, to the object's vector. For example, object **250**B is a graphic image having a vector **250**D and a bounding box that is 180 pixels high and 350 pixels wide, while object **252**B is a graphic image having a vector **252**D and a bounding box that includes a height of 200 pixels and a width of 350 pixels. This enables client-side operations to be performed that only initially consider the vectors, wherein if it is determined that a vector's endpoint (and/or the bounding box corresponding to the object the vector points to) would appear off of a display, there is no need to retrieve the content and attribute data linked to the vector. This concept is explained in further detail in the following section.

It is noted that a portion of the display content produced on a client device will never contain any rendered content, as this portion is reserved for the browser's user interface. In WINDOWS™ environments, this portion will include the browser's window frame, as well as the pulldown and icon menus provided in the browser's user interface, which are depicted by a box **264** in the Figures herein.

Client-Side Software and Processing

As discussed above, the present invention supports a wide variety of clients, including land-based clients and wireless clients. Each client requires some client-side software that enables the scalable vector content data provided to it to be rendered at a user-selectable scale factor and offset on the client's display, such as a monitor or built-in LCD screen.

By enabling original content from a web site to be displayed in such a resolution-independent manner, users will be able to view content in a manner that did not previously exist, greatly enhancing the user experience. For example, in some implementations the client may be a personal computer (PC). Using a least-common denominator approach, many web pages are designed for a smaller resolution (for example 640×480 pixels, a minimum resolution commonly supported by nearly all PC's, including legacy PC's) than the resolution provided by the video output capabilities available with many of today's PC's, such as 1024×768 pixels, 1280×1024 pixels, and even 1600×1200 pixels. As a result, when these web pages are displayed on a high-resolution display, they occupy only a portion of the display, making portions of the pages, especially those portions containing small text, difficult to read. By enabling users to selectively magnify the entire page, these design flaws are easily overcome. Alternatively, the client may be a small device, such as a hand held computer or a cell phone, which has a smaller display resolution than common Web pages are designed for. As explained below, through use of the invention's scalable vector representation

and client-side processing, users are enabled to view the entire content of billions of existing Web pages using hand-held devices in a simple and reasonable way.

In one embodiment, the client software may be a plug-in to a Web browser, such as Netscape Navigator or Microsoft Internet Explorer. Such a plug-in might have the browser download the data and display it in a sub-window of the browser. Alternatively, the client software may be a Java applet running in a browser. As another option, the client software may be a stand-alone program that interfaces with the proxy server or proxy software directly. The client software may bypass the proxy when requesting information that won't be translated to vectors, such as bitmaps.

With reference to FIG. **6**, client-side processing proceeds in the following manner. In a block **160**, the vector representation data (i.e., vectorized HTML content and compressed bitmap content) for the web page is gathered at the client. Typically, this data will be stored in a cache at the client as it is being received, and the client simply retrieved the data from the cache. In a block **162**, a display list of vectors is built. This process is well known in the CAD arts, and is enabling rapid zooming of vector-based objects. In a block **164**, user selectable scale and offset (pan) values are determined. Based on various user interactions with the user-interface of the client, the user is enabled to control the zoom (size) and offset of the rendered page. For example, suppose the user provides zoom and offset inputs to produce a rendered page **210**E, as shown in FIG. **4**E. In this rendered page, the original origin is now off of the screen (the page image is shifted upward and toward the left—see FIG. **4**F), and the view has been scaled approximately 1.3 times.

Next, in a block **166**, the vectors and boundary boxes are processed based on the scale and offset, and a bounding box defining the limits of the display content is determined. The results of this step are shown in FIG. **4**F, while FIG. **4**G shows specific details on how the vectors and bounding boxes corresponding to image objects **250**B and **252**B (now **250**B' and **252**B', respectively) are processed. Logically, there are generally two ways to scale and offset the rendered content. In one embodiment, vectors and bounding boxes are mapped to a virtual display area in memory that has much greater resolution (e.g., 100,000×100,000 pixels) than any real display, and a virtual display limit bounding box is scaled and moved around over the virtual display area. Accordingly, during subsequent processing described below, objects falling within the display bounding box are rendered by reducing the scaling of those objects in the virtual display to how the objects will appear on the client device display relative to the virtual display bounding box. In the alternate, a fixed reference frame corresponding to the display resolution of the client device screen is maintained, wherein all vectors and bounding boxes are scaled and offset relative to the fixed reference frame. Each scheme has its advantages and disadvantages. One advantage of the second method is that the display bounding box is always maintained to have a size that matches the resolution of the content display area on the client device.

As shown in FIG. **4**G, respective offsets in X and Y, (−ΔX and −ΔY in the Figure) are applied to the starting point of each of the vectors. The vectors are then scaled by a scale factor "SF." The results of the new vectors are depicted by vectors **250**D" and **252**D". This produces a new datum for each object's bounding box that is relative to rendered page datum **262**, which remains fixed. As discussed above, only a portion of the display screen will actually be used to display content (as defined by a display limit bounding box **266** in this embodiment), while other portions of the screen, including box **264**, will comprise a generally fixed-size user interface. Accordingly, rendered page datum **262** is not located at the upper left hand corner of the display area, although it possibly could be located at this point when either the current user interface is inactive (i.e., the display portion of the user interface is temporary disabled) or the user interface is contained in other portions of the display.

This foregoing process establishes a starting point (the new datum) for where the content in each object's bounding box will be rendered. At this point, each object's bounding box is then drawn from its new datum using the scaling factor. For example, in the original web page **210**D (FIG. **4**D), bounding box **250**B had an X-axes datum of 150 pixels, a Y-axis datum of 225 pixels, and a height and width of 180×350 pixels. In contrast, after being offset and scaled, bounding box **250**B' has an X-axis datum of 150*SF−ΔX, a Y-axis datum of 225*SF−ΔY, and a height and width of 180*SF×350*SF.

Returning to the flowchart of FIG. **6**, once the vectors and bounding boxes are offset and scaled, content corresponding to objects having at least a portion of their bounding boxes falling within the display limit bounding box is retrieved from the client device's display list in a block **168**. For examples, as shown in FIG. **4**F, content corresponding to all of the objects except for those falling entirely outside of display limit bounding box **266** (objects **216**, **238**, **240**, **242** and **244**) is retrieved from the display list. That content is then scaled in a block **170**. For image content, this comprises decompressing and scaling the compressed bitmaps corresponding to those images. For text content, this comprises scaling the font (i.e., typeface) that the text content portions of the web page are written in the parent HTML document and any referenced documents. There are various techniques for typeface scaling that may be implemented here, depending on the available resources provided by the operating system of the client device. For example, for WINDOWS™ operating systems, many TRUETYPE™ fonts are available, which use a common scalable definition for each font, enabling those fonts to be scaled to just about any size. In other cases, such as current PDA (e.g., Palm Pilots) operating systems, there is no existing feature that supports scaling fonts. As a result, bitmapped fonts of different font sizes and styles may be used. In addition to scaling image and text content, other types of content, such as separator lines and borders may also be scaled by block **170**.

The process is completed in a block **172**, wherein those portions of the scaled content falling within the display limit bounding box are rendered on the client device's display.

As discussed above, it is foreseen that the invention will be used with client devices having small, low resolution displays, such as PDAs and pocket PCs. Examples of various views of an exemplary web pages obtained from the YAHOO™ web site are shown in FIGS. **7**A-B, **8**A-B and **9**A-B. For instance, FIG. **7**A represents how the YAHOO™ home page might appear on a Palm IIIc color PDA.

In addition to directly scaling and offsetting content, the client user-interface software for PDA's provides additional functionality. For instance, a user may select to view a column (results represented in FIG. **7**B by tapping that column with a stylus, a shown in FIG. **7**A. Similarly, the user may select to zoom in on an image by tapping the image with the stylus, as shown in FIGS. **8**A and **8**B, or select to view a paragraph in an article by tapping on the paragraph, as shown in FIGS. **9**A and **9**B. It is noted that in some instances, the display of the paragraph may be reformatted to fit the characteristics of the display, rather than following the original format in the zoom-out view.

It is further noted that that different scaling factors can be applied to the X and Y axis so as to change the aspect ratio of the display. For example, a Web page may be designed to be displayed on a computer having a resolution of 800×600 pixels, or a 4X to 3Y aspect ratio. In this case, the display corresponds to a "landscape" layout, wherein there are more pixels along the X axis than along the Y axis. Conversely, many handheld devices display images having a "portrait" layout, wherein there are more pixels along the Y axis than the X axis. By enabling different scaling factors to be applied to the X and Y axes, the present invention enables the aspect ratio of a rendered display image to be adjusted to better fit the aspect ratio of the client device.

An Exemplary Computer Architecture

An exemplary machine in the form of a computer system **500** in which features of the present invention may be implemented will now be described with reference to FIG. **10**. Computer system **500** may represent a workstation, host, server, print server, or printer controller. Computer system **500** comprises a bus or other communication means **501** for communicating information, and a processing means such as processor **502** coupled with bus **501** for processing information. Computer system **500** further comprises a random access memory (RAM) or other dynamic storage device **504** (referred to as main memory), coupled to bus **501** for storing information and instructions to be executed by processor **502**. Main memory **504** also may be used for storing temporary variables or other intermediate information during execution of instructions by processor **502**. Computer system **500** also comprises a read only memory (ROM) and/or other static storage device **506** coupled to bus **501** for storing static information and instructions for processor **502**.

A data storage device **507** such as a magnetic disk or optical disc and its corresponding drive may also be coupled to bus **501** for storing information and instructions. Computer system **500** can also be coupled via bus **501** to a display device **521**, such as a cathode ray tube (CRT) or Liquid Crystal Display (LCD), for displaying information to an end user. Typically, an alphanumeric input device **522**, including alphanumeric and other keys, may be coupled to bus **501** for communicating information and/or command selections to processor **502**. Another type of user input device is cursor control **523**, such as a mouse, a trackball, or cursor direction keys for communicating direction information and command selections to processor **502** and for controlling cursor movement on display **521**.

A communication device **525** is also coupled to bus **501**. Depending upon the particular presentation environment implementation, the communication device **525** may include a modem, a network interface card, or other well-known interface devices, such as those used for coupling to Ethernet, token ring, or other types of physical attachment for purposes of providing a communication link to support a local or wide area network, for example. In any event, in this manner, the computer system **500** may be coupled to a number of clients and/or servers via a conventional network infrastructure, such as a company's Intranet and/or the Internet, for example.

Importantly, the present invention is not limited to having all of the routines located on the same computer system. Rather, individual objects, program elements, or portions thereof may be spread over a distributed network of computer systems. Additionally, it is appreciated that a lesser or more equipped computer system than the example described above may be desirable for certain implementations. Therefore, the configuration of computer system **500** will vary from implementation to implementation depending upon numerous factors, such as price constraints, performance requirements, and/or other circumstances. For example, according to one embodiment of the present invention, a cell phone or a hand held computer may comprise only a processor or a micro controller and a memory, such as a micro code ROM or RAM, for storing static or dynamically loaded instructions and/or data.

In the foregoing specification, the invention has been described with reference to specific embodiments thereof. It will, however, be evident that various modifications and changes may be made thereto without departing from the broader spirit and scope of the invention. The specification and drawings are, accordingly, to be regarded in an illustrative rather than a restrictive sense.

What is claimed is:

1. A mobile device, comprising:

a processor,

a wireless communications device operatively coupled to the processor, to facilitate communication with a network via which Web content may be accessed;

a touch-sensitive display;

a memory, operatively coupled to the processor; and

storage means, operatively coupled to the processor, in which a plurality of instructions are stored that when executed by the processor enable the mobile phone to perform operations including,

enabling a user to request access to a Web page comprising HTML-based Web content defining an original page layout, functionality, and design of content on the Web page;

retrieving HTML-based Web content associated with the Web page;

translating the HTML-based Web content to produce scalable vector-based page layout information;

employing the scalable vector-based page layout information and/or data derived therefrom to,

render a view of at least a portion of the Web page on the touch-sensitive display using a first scale factor; and

re-render the Web page in response to associated user inputs to enable a user to iteratively zoom in and out views of the Web page on the display while preserving the original page layout, functionality, and design of the content on the Web page defined by the HTML-based Web content,

wherein preservation of the functionality defined by the HTML-based content includes preservation of hyperlink functionality.

2. The mobile device of claim **1**, wherein the device comprises a mobile phone.

3. The mobile device of claim **1**, wherein the device comprises one of a hand-held device or a palm-held device.

4. The mobile device of claim **1**, wherein execution of the instructions performs further operations comprising enabling the user to zoom in on a user-selectable portion of a display of the Web page in response to a user interface input made via the touch-sensitive display.

5. The mobile device of claim **1**, wherein the display of the Web page is re-rendered in real-time to effect zooming operations.

6. The mobile device of claim **1**, wherein the Web content includes at least one hyperlink, and wherein execution of the instructions performs further operations comprising:

enabling the user to select the hyperlink via the touch-sensitive display; and, in response thereto,

retrieving and translating HMTL-based Web content associated with the hyperlink to produce additional scalable vector-based page layout information; and

employing the additional scalable vector-based page layout information and/or data derived therefrom to render the Web content associated with the hyperlink on the touch-sensitive display.

7. The mobile device of claim **1**, wherein execution of the instructions performs further operations comprising enabling the Web content to be displayed at different resolutions by scaling the scalable vector-based page layout information to resize a view of the Web page on the display in response to associated user inputs.

8. The mobile device of claim **1**, wherein execution of the instructions performs further operations comprising returning the display of the Web content to a previous view in response to a corresponding user input made via the touch-sensitive display.

9. The mobile device of claim **1**, wherein execution of the instructions performs further operations comprising enabling a user to pan a display of the Web content in response to a corresponding user input made via the touch-sensitive display.

10. The mobile device of claim **9**, wherein execution of the instructions performs further operations comprising enabling the display of the Web content to be panned in real-time.

11. The mobile device of claim **1**, wherein the page layout of the Web page is defined to have an original aspect ratio, and wherein the scalable vector-based page layout information and/or data derived therefrom is scaled to render a display having a different aspect ratio.

12. The mobile device of claim **1**, wherein execution of the instructions performs further operations comprising enabling a user to view a column of the Web content at a higher resolution than a current resolution by tapping on the column via the touch-sensitive display, wherein in response thereto, the display is re-rendered such that content corresponding to the selected column is displayed to fit across the touch-sensitive display.

13. The mobile device of claim **1**, wherein the Web content includes at least one image, and wherein execution of the instructions performs further operations comprising enabling a user to view an image at a higher resolution than a current resolution by tapping on the image via the touch-sensitive display, wherein in response thereto, the display is re-rendered such that the image is displayed to fit across a width of a display area of the touch-sensitive display.

14. The mobile device of claim **1**, wherein execution of the instructions performs further operations comprising enabling a user to view a paragraph of the Web content at a higher resolution than a current resolution by tapping on the paragraph via the touch-sensitive display, wherein in response thereto, the display is re-rendered such that content corresponding to the selected paragraph is displayed to fit across a width of a display area of the touch-sensitive display.

15. The mobile device of claim **1**, wherein execution of the instructions performs further operations comprising:

generating a display list derived, at least in part, via use of the vector-based page layout information; and

employing the display list to re-render the display of the Web page.

16. The mobile device of claim **1**, wherein execution of the instructions performs further operations comprising:

parsing HTML-based code corresponding to the received Web content to logically group content into objects, the objects including a plurality of display objects;

defining a primary datum corresponding to a page layout; and,

for each display object,

defining an object datum corresponding to a layout location datum for the object's associated display content;

generating a vector from the primary datum to the object datum for the object; and

creating a reference that links the object to its corresponding vector.

17. The mobile device of claim **16**, wherein execution of the instructions performs further operations comprising:

mapping the object vectors to a virtual display area in memory.

18. The mobile device of claim **1**, wherein execution of the instructions performs further operations comprising:

parsing the HTML-based content to logically group content into objects;

generating page layout information including a bounding box for each object, the bounding box defining width and height dimensions for the object; and

storing information that links each object with its corresponding page layout information;

wherein the page layout information further includes information from which a page layout location of each of the bounding boxes can be determined.

19. The mobile device of claim **1**, wherein the scalable vector-based content includes scalable text content, and wherein execution of the instructions performs further operations comprising scaling a scalable font to render the scalable text content.

20. The mobile device of claim **1**, wherein at least a portion of the instructions comprise Java-based instructions configured to be executed on a Java virtual machine.

21. The mobile device of claim **1**, wherein translating the HTML-based Web content to produce scalable vector-based page layout information comprises:

processing the HTML-based Web content with a rendering engine to generate page layout information corresponding to the original page layout as interpreted by the rendering engine; and

employing the page layout information to produce scalable vector-based page layout information.

22. The mobile device of claim **21**, wherein the page layout information defines a layout location for a plurality of objects, including text objects, graphic layout objects, and/or image objects included on the Web page, and wherein producing vector-based page layout information comprises:

defining a primary datum corresponding to a page layout; and,

for each object,

defining an object datum corresponding to the layout location for the object on the page layout;

generating a vector from the primary datum to the object datum for the object; and

creating a reference that links the object to its corresponding vector.

23. The mobile device of claim **22**, wherein execution of the instructions performs further operations comprising effecting a zoom operation combined with a pan operation by,

for each of the plurality of display objects to be included in a panned view of the Web page to be rendered on the display,

scaling page layout information associated with the display object using a scale factor corresponding to a zoom level associated with the zoom operation to determine a scaled datum;

determining an offset corresponding to the pan operation and combining the scaled datum with the offset to produce a scaled and offset datum that defines a location where the display object is to be rendered on the panned view of the Web page;

scaling content associated with the display object using the scale factor; and

rendering the scaled content at the location defined by the scaled and offset datum to render the display object on the panned view of the Web page.

24. The mobile device of claim **23**, wherein rendering scaled content associated with a text object comprises:

retrieving presentation attributes for the text object, the presentation attributes including a font typeface, size and color;

employing a scalable font associated with the font typeface to render text associated with the text object in a color associated with the color attribute, wherein the text is rendered relative to a location associated with the scaled and offset datum for the text object, and wherein the scale applied to the scalable font is a function of the scale factor and the font size.

25. The mobile device of claim **21**, wherein the original format of the Web page defines a width for the Web page, as interpreted by the rendering engine, and wherein execution of the instructions performs further operations comprising:

determining an applicable scale factor to fit the width of the Web page across a display area of the touch-sensitive display; and

employing the scale factor that is determined as the first scale factor.

26. The mobile device of claim **1**, wherein zooming operations are effected by applying a mathematical transformation to a plurality of points in a two-dimensional coordinate system comprising X and Y axes, including points comprising datum points having corresponding vectors included in the scalable vector-based page layout information defining page layout locations of corresponding text and image objects mapped to the two-dimensional coordinate system, wherein the mathematical transformation comprises,

$$X'=X*SF;$$

$$Y'=Y*SF;$$

wherein X, Y is the location of a point prior to transformation, X', Y' is the location of the point after transformation, and SF is the scale factor.

27. The mobile device of claim **26**, wherein the mathematical transformation is applied to points in a first coordinate system comprising a virtual coordinate system associated with a virtual display area onto which page layout information is mapped to a second coordinate system comprising a device coordinate system corresponding to a pixel resolution of the display of the mobile device, wherein points are mapped from the first coordinate system to the second coordinate system using the mathematical transformation.

28. The mobile device of claim **1**, wherein execution of the instructions performs further operations comprising maintaining at least one instance of the page layout information in a manner that is independent of the zoom levels used to view the web page on the display.

29. The mobile device of claim **1**, wherein the HTML-based Web content includes cascading style sheet content defining layout and presentation attributes for the Web page.

30. A mobile phone, comprising:

a processor,

wireless communications means operatively coupled to the processor, to facilitate communication with a mobile service provider network via which Web content may be accessed;

a touch-sensitive display;

a memory, operatively coupled to the processor; and

storage means, operatively coupled to the processor, in which a plurality of instructions are stored that when executed by the processor enable the mobile phone to perform operations including,

rendering a browser interface via which a user is enabled to request to access to a Web page having an original format comprising HTML-based content defining an original page layout, functionality, and design of content on the Web page;

retrieving HTML-based content associated with the Web page;

translating at least a portion of the HTML-based content from its original format to produce translated content including scalable vector-based content that supports a scalable resolution-independent representation of the HTML-based content that preserves an original page layout, functionality and design of the at least a portion of the HTML-based content when scaled and rendered; and

employing the scalable vector-based content to render a view of at least a portion of the Web page on the display using a first scale factor,

wherein preservation of the functionality defined by the HTML-based content includes preservation of hyperlink functionality.

31. The mobile phone of claim **30**, wherein execution of the instructions performs further operations comprising enabling the user to zoom in on a user-selectable portion of a display of the Web page in response to a user interface input made via the touch-sensitive display.

32. The mobile phone of claim **31**, wherein the display of the Web page is re-rendered in real-time to effect zooming operations.

33. The mobile phone of claim **30**, wherein the Web content includes at least one hyperlink, and wherein execution of the instructions performs further operations comprising:

enabling the user to select the hyperlink via the touch-sensitive display; and, in response thereto,

retrieving and translating the Web content associated with the hyperlink to produce additional scalable vector-based content; and

employing the additional scalable vector-based content to render the Web content associated with the hyperlink on the touch-sensitive display.

34. The mobile phone of claim **30**, wherein execution of the instructions performs further operations comprising:

parsing and processing markup language code associated with the Web page to determine the original page layout of display content within the Web page, wherein the original page layout defines a layout location for a plurality of objects, including text objects, graphic layout objects, and/or graphic image objects included in the Web page;

defining a primary datum corresponding to the original page layout; and,

for each object,

defining an object datum corresponding to the layout location for the object;

generating a vector from the primary datum to the object datum for the object; and

creating a reference that links the object to its corresponding vector.

35. The mobile phone of claim **30**, wherein execution of the instructions performs further operations comprising enabling the Web content to be displayed at different resolutions by scaling the scalable vector-based content to re-render the display in response to associated user inputs.

36. The mobile phone of claim **30**, wherein execution of the instructions performs further operations comprising returning the display of the Web content to a previous view in response to a corresponding user input made via the touch-sensitive display.

37. The mobile phone of claim **30**, wherein execution of the instructions performs further operations comprising enabling a user to pan a display of the Web content in response to a corresponding user input made via the touch-sensitive display.

38. The mobile phone of claim **37**, wherein execution of the instructions performs further operations comprising enabling the display of the Web content to be panned in real-time.

39. The mobile phone of claim **30**, wherein the page layout of the Web page is defined to have an original aspect ratio, and wherein the scalable vector-based content is scaled when rendered so as to produce a display having a different aspect ratio.

40. The mobile phone of claim **30**, wherein execution of the instructions performs further operations comprising enabling a user to view a column of the Web content at a higher resolution than a current resolution by tapping on the column via the touch-sensitive display, wherein in response thereto, the display is re-rendered such that content corresponding to the selected column is displayed to fit across the touch-sensitive display.

41. The mobile phone of claim **30**, wherein the Web content includes at least one image, and wherein execution of the instructions performs further operations comprising enabling a user to view an image at a higher resolution than a current resolution by tapping on the image via the touch-sensitive display, wherein in response thereto, the display is re-rendered such that the image is displayed to fit across at least one of a width and height of a display area of the touch-sensitive display.

42. The mobile phone of claim **30**, wherein execution of the instructions performs further operations comprising enabling a user to view a paragraph of the Web content at a higher resolution than a current resolution by tapping on the paragraph via the touch-sensitive display, wherein in response thereto, the display is re-rendered such that content corresponding to the selected paragraph is displayed across at least one of a width and height of a display area of the touch-sensitive display.

43. The mobile phone of claim **30**, wherein execution of the instructions performs further operations comprising:

generating a display list associated with the scalable vector-based content; and

employing the display list to re-render the display at different scale factors to enable rapid zooming of the Web page.

44. The mobile phone of claim **30**, wherein execution of the instructions performs further operations comprising:

parsing and processing markup language code corresponding to the received Web content to determine page layout information corresponding to a page layout of the content on the Web page;

logically grouping selected content into objects;

defining a primary datum corresponding to the page layout; and,

for each object,

defining an object datum corresponding to a layout location datum for the object's associated display content;

generating a vector from the primary datum to the object datum for the object; and

creating a reference that links the object to its corresponding vector.

45. The mobile phone of claim **44**, wherein execution of the instructions performs further operations comprising:

mapping the object vectors to a virtual display area in memory.

46. The mobile phone of claim **45**, wherein execution of the instructions performs further operations comprising:

determining a first scale factor and offset in response to one or more corresponding user inputs defining a user-selectable zoom level and pan corresponding to a rendered view of the Web content desired by a user;

determining a virtual display limit bounding box for the virtual display area associated with the first scale factor and offset;

identifying objects having at least a portion of their content falling within the virtual display limit bounding box; and,

for each of such objects,

retrieving content associated with that object; and

applying an appropriate scale factor and offset to the content to render the view of the Web content.

47. The mobile phone of claim **30**, wherein execution of the instructions performs further operations comprising:

parsing markup language code corresponding to the received Web content to logically group selected content into objects;

generating page layout information including a bounding box for each object, the bounding box defining width and height dimensions for the object; and

storing information that links each object with its corresponding page layout information;

wherein the page layout information further includes information from which a page layout location of each of the bounding boxes can be determined.

48. The mobile phone of claim **30**, wherein the scalable vector-based content includes scalable text content, and wherein execution of the instructions performs further operations comprising scaling a scalable font to render the scalable text content.

49. The mobile phone of claim **30**, wherein the original format of the Web page defines a width for the Web page, and wherein execution of the instructions performs further operations comprising:

determining an applicable scale factor to fit the width of the Web page across a display area of the touch-sensitive display; and

employing the scale factor that is determined as the first scale factor.

50. The mobile phone of claim **30**, wherein at least a portion of the instructions comprise Java-based instructions configured to be executed on a Java virtual machine.

51. The mobile device of claim **30**, wherein the original format of the Web page comprises HTML-based Web content and the vector-based scalable content comprises scalable vector-based page layout information, and wherein execution of the instructions performs further operations comprising:

processing the HTML-based Web content with a rendering engine to generate page layout information corresponding to the original page layout as interpreted by the rendering engine;

employing the page layout information to generate the scalable vector-based page layout information.

52. A mobile device, comprising:

a processor,

wireless communications means, to facilitate wireless communication with a network via which Web content may be accessed;

a touch-sensitive display;

flash memory, operatively coupled to the processor, in which a plurality of instructions are stored that when executed by the processor enable the mobile device to perform operations including,

rendering a browser interface via which a user is enabled to request access to a Web page comprising HTML-based Web content defining an original page layout, functionality, and design of content on the Web page;

retrieving and processing the HTML-based Web content to produce scalable content; and

employing the scalable content and/or data derived therefrom to,

render a view of the Web page on the touch-sensitive display; and

re-render the Web page in response to associated user inputs to enable the user to iteratively zoom in and out views of the Web page while preserving an original page layout, functionality, and design defined by the HTML-based Web content as interpreted by a rendering engine,

wherein preservation of the functionality defined by the HTML-based Web content includes preservation of hyperlink functionality.

53. The mobile device of claim **52**, wherein the device comprises a mobile phone.

54. The mobile device of claim **52**, wherein the device comprises one of a Personal Digital Assistant (PDA) or pocket PC.

55. The mobile device of claim **52**, wherein execution of the instructions performs further operations comprising enabling the user to zoom in on a user-selectable portion of a display of the Web page in response to a user interface input made via the touch-sensitive display.

56. The mobile device of claim **55**, wherein the user interface input enables the user to define a window of a current view of the Web page on which to zoom in on.

57. The mobile device of claim **52**, wherein the display of the Web page is re-rendered in real-time to effect zooming operations.

58. The mobile device of claim **52**, wherein the Web page includes at least one hyperlink, and wherein execution of the instructions performs further operations comprising:

enabling the user to select the hyperlink via the touch-sensitive display; and, in response thereto,

retrieving and processing HMTL-based Web content associated with the hyperlink to produce additional scalable content; and

employing the additional scalable content and/or data derived therefrom to render the Web content associated with the hyperlink on the touch-sensitive display.

59. The mobile device of claim **52**, wherein at least a portion of the scalable content comprises scalable vector-based content.

60. The mobile device of claim **52**, wherein execution of the instructions performs further operations comprising returning the display of the Web page to a previous view in response to a corresponding user input made via the touch-sensitive display.

61. The mobile device of claim **52**, wherein execution of the instructions performs further operations comprising enabling a user to pan a display of the Web content in response to a corresponding user input made via the touch-sensitive display.

62. The mobile device of claim **61**, wherein execution of the instructions performs further operations comprising enabling the display of the Web content to be panned in real-time.

63. The mobile device of claim **52**, wherein the page layout of the Web page is defined to have an original aspect ratio, and wherein the scalable content and/or data derived therefrom is scaled to render a display having a different aspect ratio.

64. The mobile device of claim **52**, wherein execution of the instructions performs further operations comprising enabling a user to view a column of the Web content at a higher resolution than a current resolution by tapping on the column via the touch-sensitive display, wherein in response thereto, the display is re-rendered such that content corresponding to the selected column is displayed across the touch-sensitive display.

65. The mobile device of claim **52**, wherein the Web content includes at least one image, and wherein execution of the instructions performs further operations comprising enabling a user to view an image at a higher resolution than a current resolution by tapping on the image via the touch-sensitive display, wherein in response thereto, the display is re-rendered such that the image is displayed to fit a width of a display area of the touch-sensitive display.

66. The mobile device of claim **52**, wherein execution of the instructions performs further operations comprising enabling a user to view a paragraph of the Web content at a higher resolution than a current resolution by tapping on the paragraph via the touch-sensitive display, wherein in response thereto, the display is re-rendered such that content corresponding to the selected paragraph is displayed across at least one of a width and height of a display area of the touch-sensitive display.

67. The mobile device of claim **66**, wherein the content of the paragraph is reformatted to fit characteristics of the display area when the display is re-rendered.

68. The mobile device of claim **52**, wherein the Web page includes text, layout attributes, and images, and wherein execution of the instructions performs further operations comprising:

receiving content corresponding to the text and layout attributes via a first connection; and

receiving content corresponding to at least one image via a second connection.

69. The mobile device of claim **68**, further comprising dynamic memory having at least a portion employed for rendering purposes, wherein execution of the instructions performs further operations comprising:

mapping the object vectors and associated bounding boxes to a virtual display area in the dynamic memory.

70. The mobile device of claim **69**, wherein execution of the instructions performs further operations comprising:

determining a first scale factor and offset in response to one or more corresponding user inputs defining a user-selectable zoom level and pan corresponding to a rendered display of the Web page desired by a user;

determining a virtual display limit bounding box for the virtual display associated with the first scale factor and offset;

identifying object bounding boxes having at least a portion falling within the virtual display limit bounding box; and,

for each of such object bounding boxes,

retrieving content associated with that object bounding box; and

applying an appropriate scale factor to the content to render the display.

71. The mobile device of claim **52**, further comprising dynamic memory having at least a portion employed for rendering purposes, wherein execution of the instructions performs further operations comprising:

building a display list via use of the scalable content and rendering the display list on a virtual display area in the dynamic memory; and

scaling the display list to re-render the display of the Web page.

72. The mobile device of claim **52**, wherein execution of the instructions performs further operations comprising:

parsing HTML-based code corresponding to the received Web content to identify content on the Web page;

logically grouping selected content into objects;

defining a primary datum corresponding to the original page layout; and,

for each object,

defining an object datum corresponding to a layout location datum for the object's associated display content;

generating a vector from the primary datum to the object datum for the object; and

creating a reference that links the object to its corresponding vector.

73. The mobile device of claim **72**, wherein execution of the instructions performs further operations comprising:

generating a bounding box for each object, the bounding box representing a portion of a rendered display page occupied by the object's associated group of content.

74. The mobile device of claim **52**, wherein the scalable content includes scalable text content, and wherein execution of the instructions performs further operations comprising scaling a scalable font to render the scalable text content.

75. The mobile device of claim **52**, wherein the original format of the Web page defines a width for the Web page, and wherein execution of the instructions performs further operations comprising:

determining an applicable scale factor to fit the width of the Web page across a display area of the touch-sensitive display; and

employing the scale factor to render the display area.

76. The mobile device of claim **52**, wherein at least a portion of the instructions comprise Java-based instructions configured to be executed on a Java virtual machine.

77. The mobile device of claim **52**, wherein a portion of the HTML-based Web content comprises XML-based content.

78. The mobile device of claim **52**, wherein a portion of the HTML-based Web content comprises cascading style sheet data.

79. A mobile device, comprising:

processing means;

wireless communications means, to facilitate wireless communication with a network via which Web content may be accessed;

touch-sensitive display means, to facilitate user input and display rendered content;

programmed circuit means; and

storage means, in which a plurality of instructions are stored,

wherein, upon execution of the instructions by at least one of the processing means and programmed circuit means, the mobile device is enabled to perform operations, including,

rendering a browser interface via which a user is enabled to request to access to a Web page comprising HTML-based Web content defining an original page layout, functionality, and design of content on the Web page;

retrieving and processing the HTML-based Web content to produce scalable content; and

employing the scalable content and/or data derived therefrom to,

render a view of the Web page on the touch-sensitive display; and

re-render the Web page in response to associated user inputs made via the touch-sensitive display means to enable the user to iteratively zoom in and out views of the Web page while preserving an original page layout, functionality, and design defined by the HTML-based Web content as interpreted by a rendering engine,

wherein preservation of the functionality defined by the HTML-based Web content includes preservation of hyperlink functionality.

80. The mobile device of claim **79**, wherein the processing means includes a general-purpose processor.

81. The mobile device of claim **79**, wherein at least a portion of the programmed circuit means is embodied as a special-purpose processor.

82. The mobile device of claim **79**, wherein execution of the instructions performs further operations comprising enabling the user to zoom in on a user-selectable portion of a display of the Web page in response to a user interface input made via the touch-sensitive display.

83. The mobile device of claim **82**, wherein the user interface input enables the user to define a window of a current view of the Web page on which to zoom in on.

84. The mobile device of claim **79**, wherein the display of the Web page is re-rendered in real-time to effect zooming operations.

85. The mobile device of claim **79**, wherein execution of the instructions performs further operations comprising enabling a user to pan a display of the Web content in response to a corresponding user input made via the touch-sensitive display.

86. The mobile device of claim **85**, wherein execution of the instructions performs further operations comprising enabling the display of the Web content to be panned in real-time.

87. The mobile device of claim **79**, wherein the Web content includes at least one image, and wherein execution of the instructions performs further operations comprising enabling a user to view an image at a higher resolution than a current resolution by tapping on the image via the touch-sensitive display, wherein in response thereto, the display is re-rendered such that the image is displayed to fit across a width of a display area of the touch-sensitive display.

88. The mobile device of claim **79**, further comprising dynamic memory having at least a portion employed for rendering purposes, wherein execution of the instructions performs further operations comprising:

building a display list of scalable content via use of the scalable content and rendering the display list on a virtual display area in the dynamic memory; and

scaling the scalable content in the display list to re-render the display of the Web page.

* * * * *

(12) **INTER PARTES REVIEW CERTIFICATE** (119th)

United States Patent (10) **Number: US 7,831,926 K1**

Rohrabaugh et al. (45) **Certificate Issued: Jan. 15, 2016**

(54) **SCALABLE DISPLAY OF INTERNET CONTENT ON MOBILE DEVICES**

(75) Inventors: **Gary B. Rohrabaugh**; **Scott A. Sherman**

(73) Assignee: **Softview L.L.C.**

Trial Numbers:

IPR2013-00004 filed Oct. 2, 2012
IPR2013-00257 filed Apr. 29, 2013

Petitioners: Kyocera Corporation; Motorola Mobility LLC

Patent Owner: Softview LLC

Inter Partes Review Certificate for:

Patent No.: **7,831,926**
Issued: **Nov. 9, 2010**
Appl. No.: **11/738,486**
Filed: **Apr. 21, 2007**

The results of joined IPR2013-00004 and IPR2013-00257 are reflected in this inter partes review certificate under 35 U.S.C. 318(b).

INTER PARTES REVIEW CERTIFICATE
U.S. Patent 7,831,926 K1
Trial No. IPR2013-00004
Certificate Issued Jan. 15, 2016

AS A RESULT OF THE INTER PARTES REVIEW PROCEEDING, IT HAS BEEN DETERMINED THAT:

Claims **30**, **31**, **40**, **41**, **43**, **52**, **55**, **59**, **72** and **75** are cancelled.

* * * * *

US007831926C1

(12) EX PARTE REEXAMINATION CERTIFICATE (11956th)

United States Patent

Rohrabaugh et al.

(10) Number: US 7,831,926 C1

(45) Certificate Issued: *Dec. 6, 2021

(54) **SCALABLE DISPLAY OF INTERNET CONTENT ON MOBILE DEVICES**

(75) Inventors: **Gary B. Rohrabaugh**, Bellingham, WA (US); **Scott A. Sherman**, Seattle, WA (US)

(73) Assignee: **Softview L.L.C.**

Reexamination Request:
No. 90/009,995, May 29, 2012

Reexamination Certificate for:

Patent No.:	**7,831,926**
Issued:	**Nov. 9, 2010**
Appl. No.:	**11/738,486**
Filed:	**Apr. 21, 2007**

(*) Notice: This patent is subject to a terminal disclaimer.

Related U.S. Application Data

(63) Continuation of application No. 09/878,097, filed on Jun. 8, 2001, now Pat. No. 7,210,099, which is a

(Continued)

(51) **Int. Cl.**

G06F 17/00	(2019.01)
G06F 40/143	(2020.01)
G06F 9/451	(2018.01)
G06F 16/958	(2019.01)
G06F 16/957	(2019.01)
G06F 40/134	(2020.01)
G06F 40/103	(2020.01)
G06F 3/0488	(2013.01)
H04L 29/08	(2006.01)
G06F 16/95	(2019.01)

(Continued)

(52) **U.S. Cl.**

CPC ***G06F 40/143*** (2020.01); ***G06F 3/0488*** (2013.01); ***G06F 9/451*** (2018.02); ***G06F 16/9577*** (2019.01); ***G06F 16/986*** (2019.01); ***G06F 40/103*** (2020.01); ***G06F 40/134*** (2020.01); ***H04L 67/04*** (2013.01); ***H04L 67/2823*** (2013.01); *G06F 3/0481* (2013.01); *G06F 16/95* (2019.01); *G06F 16/957* (2019.01); *G06F 16/958* (2019.01); *G06F 16/9537* (2019.01); *G06F 16/9574* (2019.01); *G06F 2203/04806* (2013.01); *G06F 2212/1048* (2013.01); *G06Q 30/02* (2013.01); *G09G 5/24* (2013.01); *G09G 2340/0407* (2013.01); *G09G 2340/0492* (2013.01); *H04L 67/02* (2013.01)

(58) **Field of Classification Search**

None

See application file for complete search history.

(56) **References Cited**

To view the complete listing of prior art documents cited during the proceeding for Reexamination Control Number 90/009,995, please refer to the USPTO's public Patent Application Information Retrieval (PAIR) system under the Display References tab.

Primary Examiner — Adam L Basehoar

(57) **ABSTRACT**

Mobile devices enabled to support resolution-independent scalable display of Internet (Web) content to allow Web pages to be scaled (zoomed) and panned for better viewing on smaller screen sizes. The mobile devices employ software-based processing of original Web content, including HTML-based content, XML, cascade style sheets, etc. to generate scalable content. The scalable content and/or data derived therefrom are then employed to enable the Web content to be rapidly rendered, zoomed, and panned. Display lists may also be employed to provide further enhancements in rendering speed.

At the time of issuance and publication of this certificate, the patent remains subject to pending reexamination control numbers 95/000,635 and 95/002,126 filed May 23, 2011 and Aug. 31, 2012 respectively. The claim content of the patent may be subsequently revised if a reexamination certificate issues from the reexamination proceedings.

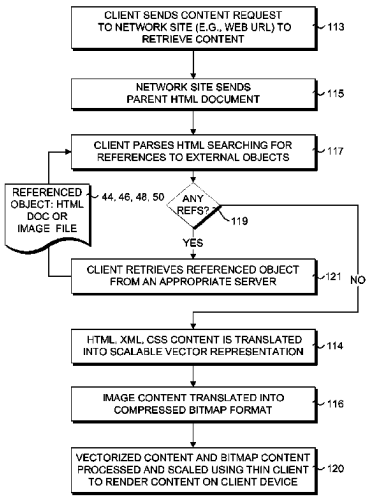

Related U.S. Application Data

continuation-in-part of application No. 09/828,511, filed on Apr. 7, 2001, now abandoned.

(60) Provisional application No. 60/217,345, filed on Jul. 11, 2000, provisional application No. 60/211,019, filed on Jun. 12, 2000.

(51) **Int. Cl.**

G06F 16/9537	(2019.01)
G06F 3/0481	(2013.01)
G06Q 30/02	(2012.01)
G09G 5/24	(2006.01)

EX PARTE REEXAMINATION CERTIFICATE

THE PATENT IS HEREBY AMENDED AS INDICATED BELOW.

AS A RESULT OF REEXAMINATION, IT HAS BEEN DETERMINED THAT:

The patentability of claim **29** is confirmed.

Claims **30**, **31**, **40**, **41**, **43**, **52**, **55**, **59**, **72** and **75** were previously cancelled.

Claims **1-28**, **32-39**, **42**, **44-51** and **69** are cancelled.

Claims **53-54**, **56-58**, **60-68**, **70-71**, **73-74** and **76-88** were not reexamined.

* * * * *

US007831926C2

(12) INTER PARTES REEXAMINATION CERTIFICATE (1674th)

United States Patent
Rohrabaugh et al.

(10) **Number: US 7,831,926 C2**
(45) **Certificate Issued: Dec. 10, 2024**

(54) **SCALABLE DISPLAY OF INTERNET CONTENT ON MOBILE DEVICES**

(75) Inventors: **Gary B. Rohrabaugh**, Bellingham, WA (US); **Scott A. Sherman**, Seattle, WA (US)

(73) Assignee: **SOFTVIEW L.L.C.**, Bellingham, WA (US)

Reexamination Request:
No. 95/000,635, May 23, 2011

Reexamination Certificate for:

Patent No.:	**7,831,926**
Issued:	**Nov. 9, 2010**
Appl. No.:	**11/738,486**
Filed:	**Apr. 21, 2007**

Reexamination Certificate C1 7,831,926 issued Dec. 6, 2021

Related U.S. Application Data

(63) Continuation of application No. 09/878,097, filed on Jun. 8, 2001, now Pat. No. 7,210,099, which is a (Continued)

(51) **Int. Cl.**

G06F 17/00	(2019.01)
G06F 3/0488	(2022.01)
G06F 9/451	(2018.01)
G06F 16/957	(2019.01)
G06F 16/958	(2019.01)
G06F 40/103	(2020.01)
G06F 40/134	(2020.01)
G06F 40/143	(2020.01)
H04L 67/04	(2022.01)

(Continued)

(52) **U.S. Cl.**
CPC ***G06F 40/143*** (2020.01); ***G06F 3/0488*** (2013.01); ***G06F 9/451*** (2018.02); ***G06F 16/9577*** (2019.01); ***G06F 16/986*** (2019.01); ***G06F 40/103*** (2020.01); ***G06F 40/134*** (2020.01); ***H04L 67/04*** (2013.01); ***H04L 67/565*** (2022.05); *G06F 3/0481* (2013.01); *G06F 16/95* (2019.01); *G06F 16/9537* (2019.01); *G06F 16/957* (2019.01); *G06F 16/9574* (2019.01); *G06F 16/958* (2019.01); *G06F 2203/04806* (2013.01); *G06F 2212/1048* (2013.01); *G06Q 30/02* (2013.01); *G09G 5/24* (2013.01); *G09G 2340/0407* (2013.01); *G09G 2340/0492* (2013.01); *H04L 67/02* (2013.01)

(58) **Field of Classification Search**
None
See application file for complete search history.

(56) **References Cited**

To view the complete listing of prior art documents cited during the proceeding for Reexamination Control Number 95/000,635, please refer to the USPTO's Patent Electronic System.

Primary Examiner — Adam L Basehoar

(57) **ABSTRACT**

Mobile devices enabled to support resolution-independent scalable display of Internet (Web) content to allow Web pages to be scaled (zoomed) and panned for better viewing on smaller screen sizes. The mobile devices employ software-based processing of original Web content, including HTML-based content, XML, cascade style sheets, etc. to generate scalable content. The scalable content and/or data derived therefrom are then employed to enable the Web content to be rapidly rendered, zoomed, and panned. Display lists may also be employed to provide further enhancements in rendering speed.

At the time of issuance and publication of this certificate, the patent remains subject to pending reexamination control number 95/002,126 filed Aug. 31, 2012. The claim content of the patent may be subsequently revised if a reexamination certificate issues from the reexamination proceeding.

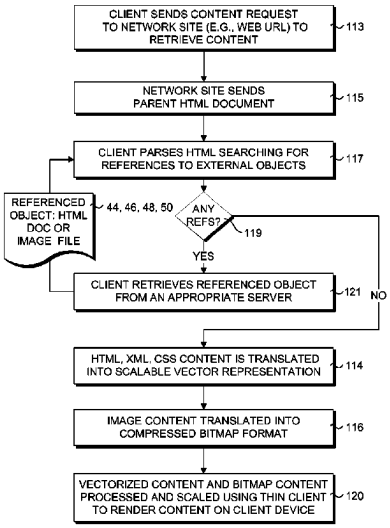

Related U.S. Application Data

continuation-in-part of application No. 09/828,511, filed on Apr. 7, 2001, now abandoned.

(60) Provisional application No. 60/217,345, filed on Jul. 11, 2000, provisional application No. 60/211,019, filed on Jun. 12, 2000.

(51) **Int. Cl.**

H04L 67/565	(2022.01)
G06F 3/0481	(2022.01)
G06F 16/95	(2019.01)
G06F 16/9537	(2019.01)
G06Q 30/02	(2023.01)
G09G 5/24	(2006.01)
H04L 67/02	(2022.01)

INTER PARTES REEXAMINATION CERTIFICATE

THE PATENT IS HEREBY AMENDED AS INDICATED BELOW.

AS A RESULT OF REEXAMINATION, IT HAS BEEN DETERMINED THAT:

Claims **1-28**, **30-52**, **55**, **59**, **69**, **72** and **75** were previously cancelled.

Claims **29**, **53-54**, **56-58**, **60-68**, **70-71**, **73-74** and **76-88** are cancelled.

* * * * *