US008533628B2

(12) **United States Patent**
Rohrabaugh et al.

(10) **Patent No.: US 8,533,628 B2**
(45) **Date of Patent: Sep. 10, 2013**

(54) **METHOD, APPARATUS, AND BROWSER TO SUPPORT FULL-PAGE WEB BROWSING ON HAND-HELD WIRELESS DEVICES**

(75) Inventors: **Gary B. Rohrabaugh**, Bellingham, WA (US); **Scott A. Sherman**, Seattle, WA (US)

(73) Assignee: **Softview LLC**, Bellingham, WA (US)

(*) Notice: Subject to any disclaimer, the term of this patent is extended or adjusted under 35 U.S.C. 154(b) by 1153 days.

(21) Appl. No.: **11/735,477**

(22) Filed: **Apr. 15, 2007**

(65) **Prior Publication Data**

US 2007/0198916 A1 Aug. 23, 2007

Related U.S. Application Data

(60) Continuation of application No. 09/878,097, filed on Jun. 8, 2001, now Pat. No. 7,210,099, which is a continuation-in-part of application No. 09/828,511, filed on Apr. 7, 2001, now abandoned, said application No. 11/735,477 is a division of application No. 09/878,097, and a division of application No. 11/045,649, filed on Jan. 28, 2005, now Pat. No. 7,584,423, and a division of application No. 11/045,757, filed on Jan. 28, 2005, now Pat. No. 7,461,353.

(60) Provisional application No. 60/211,019, filed on Jun. 12, 2000, provisional application No. 60/217,345, filed on Jul. 11, 2000.

(51) **Int. Cl.**
G06F 17/00 (2006.01)

(52) **U.S. Cl.**
USPC **715/815**; 853/760; 853/200; 853/238

(58) **Field of Classification Search**
USPC 715/249, 205, 234
See application file for complete search history.

(56) **References Cited**

U.S. PATENT DOCUMENTS

5,615,384 A 3/1997 Allard et al.
5,897,644 A 4/1999 Nielsen

(Continued)

FOREIGN PATENT DOCUMENTS

AU 761635 5/2001
GB 0009129.8 4/2000

(Continued)

OTHER PUBLICATIONS

Bederson et al. "Implementing a Zooming User Interface: Experience Building Pad++", published Mar. 16, 1998 by Wiley & Son—pp. 1101-1135.*

(Continued)

Primary Examiner — Cesar Paula
Assistant Examiner — Quoc A Tran
(74) *Attorney, Agent, or Firm* — Babak Redjaian; Irell & Manella LLP

(57) **ABSTRACT**

Apparatus, methods and software for creating resolution-independent vector display of Internet (Web) content to allow Web pages to be scaled (zoomed) and panned for better viewing and/or to fit any resolution or screen size. According to one aspect, novel client-side processing of Web content is provided that translates portions of Web content requested by a user from an original format to a scalable vector-based format. The scalable vector-based format enables the Web content to be rendered by the client such that the rendered display substantially retains an original page layout defined by the original format, while supporting scaling and panning of the Web content in real-time.

37 Claims, 22 Drawing Sheets

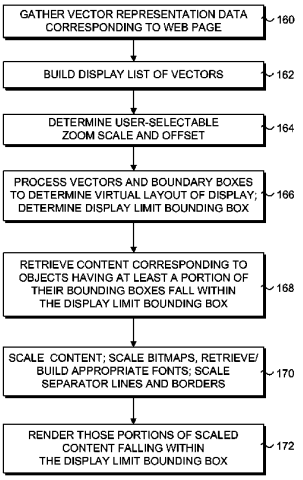

GOOGLE EXHIBIT 1071
Google LLC v. Softoview LLC
IPR2026-00284

(56) **References Cited**

U.S. PATENT DOCUMENTS

5,920,327	A	7/1999	Seidensticker, Jr.	
5,952,994	A	9/1999	Ong et al.	
5,956,025	A	9/1999	Goulden et al.	
5,966,135	A	10/1999	Roy et al.	
5,987,256	A	11/1999	Wu et al.	
6,003,046	A	12/1999	Nielsen	
6,011,905	A	1/2000	Huttenlocher et al.	
6,057,854	A	5/2000	Davis, Jr. et al.	
6,073,136	A	6/2000	Bertram	
6,076,166	A	6/2000	Moshfeghi et al.	
6,133,916	A	10/2000	Bukszar et al.	
6,134,566	A	10/2000	Berman et al.	
6,161,114	A	12/2000	King et al.	
6,185,625	B1	2/2001	Tso et al.	
6,211,856	B1	4/2001	Choi et al.	
6,272,484	B1	8/2001	Martin et al.	
6,300,947	B1	10/2001	Kanevsky	
6,307,562	B1	10/2001	Taivalsaari	
6,327,533	B1	12/2001	Chou	
6,337,693	B1	1/2002	Roy et al.	
6,343,377	B1	1/2002	Gessner et al.	
6,421,733	B1	7/2002	Tso et al.	
6,449,639	B1	9/2002	Blumberg	
6,456,305	B1	9/2002	Qureshi et al.	
6,456,308	B1	9/2002	Agranet et al.	
6,457,030	B1	9/2002	Adams et al.	
6,466,203	B2	10/2002	Van Ee	
6,535,896	B2	3/2003	Britton et al.	
6,546,397	B1	4/2003	Rempell	
6,553,393	B1	4/2003	Eilbott et al.	
6,553,410	B2	4/2003	Kikinis	
6,556,217	B1	4/2003	Makipaa et al.	
6,604,681	B1 *	8/2003	Burke et al.	235/383
6,605,120	B1	8/2003	Fields et al.	
6,615,212	B1	9/2003	Dutta et al.	
6,642,925	B2	11/2003	Roy et al.	
6,650,343	B1	11/2003	Fujita et al.	
6,674,445	B1 *	1/2004	Chithambaram et al.	345/619
6,684,087	B1	1/2004	Yu et al.	
6,700,589	B1 *	3/2004	Canelones et al.	345/660
6,704,024	B2	3/2004	Robotham et al.	
6,724,403	B1	4/2004	Santoro et al.	
6,751,620	B2	6/2004	Orbanes	
6,781,600	B2	8/2004	Anwar	
6,791,571	B1	9/2004	Lamb	
6,795,089	B2	9/2004	Rajarajan et al.	
6,826,727	B1	11/2004	Mohr et al.	
6,829,746	B1	12/2004	Schwerdtfeger et al.	
6,857,102	B1	2/2005	Bickmore et al.	
6,873,343	B2	3/2005	Chui	
6,874,131	B2	3/2005	Blumberg	
6,886,034	B2	4/2005	Blumberg	
6,925,595	B1	8/2005	Whitledge et al.	
6,925,597	B2	8/2005	Anwar	
6,947,995	B2	9/2005	Chang	
6,978,418	B1	12/2005	Bain et al.	
6,996,533	B2	2/2006	Ikeda et al.	
7,009,626	B2	3/2006	Anwar	
7,023,572	B2	4/2006	Tuli	
7,032,172	B1	4/2006	Lee	
7,036,076	B2	4/2006	Anwar	
7,051,276	B1	5/2006	Mogilevsky et al.	
7,055,095	B1	5/2006	Anwar	
7,072,984	B1	7/2006	Polonsky et al.	
7,142,205	B2	11/2006	Chithambaram et al.	
7,162,493	B2	1/2007	Weiss et al.	
7,219,309	B2	5/2007	Kaasila et al.	
7,222,306	B2	5/2007	Kaasila et al.	
7,236,173	B2	6/2007	Chithambaram et al.	
7,287,220	B2	10/2007	Kaasila et al.	
7,308,649	B2	12/2007	Ehrich et al.	
7,441,196	B2	10/2008	Gottfurcht et al.	
7,450,114	B2	11/2008	Anwar	
7,737,993	B2	6/2010	Kaasila et al.	
7,823,083	B2	10/2010	Rohrabaugh et al.	
7,831,926	B2	11/2010	Rohrabaugh et al.	
2001/0015719	A1	8/2001	Van Ee et al.	
2001/0047428	A1	11/2001	Hunter	
2002/0018072	A1 *	2/2002	Chui	345/667
2002/0023110	A1	2/2002	Fortin et al.	
2002/0030699	A1 *	3/2002	Van Ee	345/810
2002/0091738	A1	7/2002	Rohrabaugh et al.	
2002/0112237	A1	8/2002	Ketts	
2002/0158908	A1	10/2002	Vaajala et al.	
2004/0049598	A1	3/2004	Tucker et al.	
2004/0210833	A1 *	10/2004	Lerner et al.	715/512
2005/0131887	A1	6/2005	Rohrabaugh et al.	
2005/0144256	A1	6/2005	Blumberg	
2007/0080958	A1 *	4/2007	Chithambaram et al.	345/418

FOREIGN PATENT DOCUMENTS

GB	2344197	A	5/2000
JP	04-259029		9/1992
JP	04-291675		10/1992
JP	05-165459		7/1993
JP	05-346923		12/1993
JP	09-009160		1/1997
JP	09-016788		1/1997
JP	09-305472		11/1997
JP	09-319537		12/1997
JP	H10-21224		1/1998
JP	10-069473		3/1998
JP	10-162002		6/1998
JP	10-326136		12/1998
JP	10-326244		12/1998
JP	10-334082	A	12/1998
JP	H10-326169	A	12/1998
JP	11-015749		1/1999
JP	11-015819		1/1999
JP	11-250009		9/1999
JP	2000-076473		3/2000
JP	2000-090001		3/2000
JP	2000-115527		4/2000
JP	2000-222330		8/2000
JP	2000-267967		9/2000
JP	2000-284884		10/2000
JP	2000-330547		11/2000
JP	2001-022496		1/2001
JP	2001-043125		2/2001
WO	99/37095		7/1999
WO	00/28518		5/2000

OTHER PUBLICATIONS

Benjamin B Bederson et al.,(Pad++ Sep. 19, 1995 pp. 1-30) published by UNM www.cs.unm.edu/pad++.*

Ron Person, "Web Publishing with Word for Windows" Published 1995 by QUE Corp [total 16 pages].*

Jones et al. "From the large screen to the small screen—retaining the designer's design for effective user interaction," IEEE Colloquium on Issues for Networked Interpersonal Communicators, May 1997, pp. 3/1-3/4.

Pacchiano, "Adobe's New View," Computer Shopper, vol. 19, No. 4, Apr. 1999, p. 346.

Scalable Vector Graphics (SVG) Specification, W3C Working Draft Feb. 11, 1999 WD-SVG-19990211, http://www.w3.org/TR/1999/WD-SVG-19990211/ (HTML format—initial page).

Scalable Vector Graphics (SVG) Specification, W3C Working Draft Apr. 12, 1999 WD-SVG-19990412, http://www.w3.org/TR/1999/WD-SVG-19990412/ (HTML format—initial page).

Official USPTO Action for U.S. Appl. No. 11/868,124 Mailed Aug. 24, 2010 pp. 1-15.

U.S. Appl. No. 60/296,275.

U.S. Appl. No. 60/296,237.

U.S. Appl. No. 60/296,274.

U.S. Appl. No. 60/296,284.

U.S. Appl. No. 60/296,231.

U.S. Appl. No. 60/296,224.

U.S. Appl. No. 60/296,426.

U.S. Appl. No. 60/296,273.

U.S. Appl. No. 60/296,283.

U.S. Appl. No. 60/296,281.

U.S. Appl. No. 60/296,327.
Scalable Vector Graphics (SVG) Specification W3C Working Draft Feb. 11, 1999 http://www.w3.org/TR/1999/WD-SVG-19990211/—Pub Feb. 11, 1999 by W3C pp. 1-7.
Fisher, B., G. Agelidis, J. Dill, P. Tan, G. Collaud and C. Jones. "CZWeb: Fish-Eye Views for Visualiziang the World-Wide Web", Proc. Seventh Int. Conf. on Human-Computer Interaction (HCI International '97), pp. 719-722, 1997.
Benjamin B. Bederson et al., Pad++: A Zoomable Graphical Sketchpad for Exploring Alternate Interface Physics, Sep. 19, 1995, pp. 1-30, http://www.cs.unm.edu/pad++.
Specification for Simple Vector Format (SVF) v1.1 Jan. 16, 1995, pp. 1-9.
Specification for Simple Vector Format (SFV) v2.0 Dec. 6, 2000, http://www.svf.org/spec.html, pp. 1-20.
Changes to SVF (Date unknown), pp. 1-2.
Scalable Vector Graphics (SVG) 1.0 Specification, W3C Candidate Recommendation Nov. 2, 2000, pp. 1-513.
Introduction to SVG, part of WD-SVG-19990211, http://www.w3.org/TR/1999/ WD-SVG-19990211/intro.html#Document . . . , pp. 1-3.
W3C Scalable Vector Graphics (SVG)—History, http://www.w3.org/Graphics/SVG/History, pp. 1-18.
Janus Boye, SVG Brings Fast Vector Graphics to Web, Jul. 29, 1999 http://www.irt.org/articles/js1761, pp. 1-5.
Vector Markup Language (VML), World Wide Web Consortium Note May 13, 1998, NOTE-VML-19980513, http://www.w3.org/TR/1998/NOTE-VML_19980513, pp. 1-47.
Vector Markup Language, http://en.wikipedia.org/wiki/Vector_Markup_Language, pp. 1-2.
Precision Graphics Markup Language (PGML), World Wide Web Consortium Note Apr. 10, 1998, NOTE-PGML-19980410, http://www.w3.org/TR/1998/NOTE-PGML-19980410, pp. 1-31.
PCT International Search Report for International Application No. PCT/US01/40920, International Searching Authority, European Patent Office, Dec. 27, 2001, pp. 1-8.
PCT International Preliminary Exam Report for International Application No. PCT/US01/40920, International Preliminary Examining Authority, European Patent Office, Jun. 20, 2002, pp. 1-5.
Dennis, "Webraska Joins W3C for Next Generation Internet Graphics," Newsbytes, May 8, 2000, entirety (pages not numbered).
Fox et al. "Experience With Top Gun Wingman: A Proxy-Based Graphical Web Browser for the 3Com PalmPilot" Proceedings of Middleware '98, 1998, entirety (pages not numbered).
"Tadpole Technology: ILOG technology within Tadpole's Cartesia Redline system making repairs simpler," M2 Presswire, Jan. 1999, entirety (pages not numbered).
Thryft, "Wireless link ramped for 'always on' Internet," EETimes, Mar. 23, 1999, pp. 1-4.
Bharadvaj et al., "An Active Transcoding Proxy to Support Mobile Web Access," Proc. of the IEEE Symposium on Reliable Distributed Systems, 1998, entirety (pages not numbered).
Björk, et al., "WEST: A Web Browser for Small Terminals," Proceedings of the 12 ACM symposium on User Interface Software and Technology (1999), entirety (pages not numbered).
Holmquist, "The Zoom Browser," Human IT Tridskrift för studier av IT ur ett humanvetenskaplight perspektive, Mar. 1998, pp. 1-18.
Chapple, "Rethinking the role of an embedded Internet client in digital set-top boxes," WebTV Workshop Submission Paper, Jun. 1998, http://www.w3.org/Architecture/1998/06/Workshop/paper11/, pp. 1-4.
Graham, "Mobile SVG at BitFlash Inc.", May 2001, http://www.w3.org/Talks/2002/1007-DI-Helsinki/bitflash/index.html, pp. 1-4.
Koncz, "Working with Autodesk Mapguide," Nov. 2000, http://www.directionsmag.com/article.php? article_id=77&trv=1, pp. 1-6.
Schaffer et al- "Navigating Hierarchically Cluster Networks through Fisheye and Full-Zoom Methods," Mar. 24, 1988-pp. 1-20.
Holmquist "Flip Zooming: Focus+Context Visualization of Linearly Ordered Discrete Visual Structures," Published 2000, pp. 27-53.
Knudsen, Jonathan, "Java 2D Graphics," O'Reilly and Associates, Inc., May 5, 1999 (Electronic Form), pp. 1-287.
Opera 3.60 Help Document, available on May 12, 1999 (e.g. PDF pp. 7-28, 36-87).
SVF XML (http://www.svf.org/svfxml.html) p. 1-18 (Date Unknown).
Defendant Apple Inc.'s Answer, Defenses, and Counterclaims to First Amended Complaint (10-cv-00389, D. Del.) (Jan. 3, 2011) (p. 1-22).
Defendant AT&T Mobility, LLC.'s Answer, Defenses, and Counterclaims to First Amended Complaint (10-cv-00389, D. Del.) (Jan. 3, 2011) (p. 1-22).
Plaintiff SoftView LLC's Reply to Defendant Apple Inc.'s Defenses and Counterclaims (10-cv-00389, D. Del.) (Jan. 24, 2011) (p. 1-8).
SoftView LLC's Brief in Support of Its Motion for Leave to Amend Its Complaint (10-cv-00389, D. Del.) (Nov. 10, 2011) (p. 1-9).
SoftView LLC's First Amended Complaint (10-cv-00389, D. Del.) (Dec. 3, 2010) (p. 1-7).
AT&T Mobility LLC's First Supplemental Objections and Responses to Softview LLC's Amended First Set of Interrogatories (Nos. 1-8 to ATTM; Nos. 1-7 and 10 in Softview LLC's Amended First Set of Interrogatories to Defendants, Jul. 12, 2011 (39 pages).
Softview LLC's Responses to Kyocera Corp. and Kyocera Wireless Corp.'S First Set of Interrogatories (No. 1) with Exhibits, filed Jul. 23, 2012 in the case of *SoftView LLC* v. *Apple Inc*., and *AT&T Mobility LLC*, Case No. 10-389-LPS in the United States District court for the District of Delaware, pp. PX 1027_1-1027_89.
HTC Corp. and HTC America, Inc's Responses to Softview LLC's First Set of Common Interrogatories (Nos. 1-10), *Softview LLC* v. *Apple Inc. et al*., 10-389 (LPS) (D. Del.), Jul. 26, 2012, p. 1-19.
Defendants' Opening Claim Construction Brief (including Exhibits AJ) filed Sep. 21, 2012 in the case of *SoftView LLC* v. *Apple Inc*., and *AT&T Mobility LLC*, Case No. 10-389-LPS in the United States District court for the District of Delaware, pp. PX 1026_1-1026_751.
Sony Mobile's Objections and Responses to Plaintiff's First Set of Common Interrogatories to Sony Mobile Communications (USA) Inc. (Nos. 1-10), *Softview LLC* v. *Apple Inc. et al*., 10-389 (LPS) (D. Del.), Jul. 19, 2012, p. 1-38.
Plaintiff SoftView LLC's Technology Tutorial filed Sep. 21, 2012 in the case of *SoftView LLC* v. *Apple Inc*., and *AT&T Mobility LLC*, Case No. 10-389-LPS in the United States District court for the District of Delaware, p. 1-49.
Declaration of Glenn Reinman in Support of Plaintiff SoftView LLC's Opening Claim Construction Brief (including Exhibits A-D) filed Sep. 21, 2012 in the case of *SoftView LLC* v. *Apple Inc*., and *AT&T Mobility LLC*, Case No. 10-389-LPS in the United States District court for the District of Delaware, p. 1-7.
Declaration of Craig Johnson in Support of Plaintiff SoftView LLC's Opening Claim Construction Brief (including Exhibits 1-14) filed Sep. 21, 2012 in the case of *SoftView LLC* v. *Apple Inc*., and *AT&T Mobility LLC* , Case No. 10-389-LPS in the United States District court for the District of Delaware, pp. PX 1023_1-PX 1023_198.
SoftSource Press Releases, available at http://web.archive.org/web/19961019052917/http://softsource.com/net-news.html, Jun. 1995, p. 1-5.
Meyer, Jonathan, "A Brief Tour Through Pad++," Apr. 1997 ("Pad++ Tour"), p. 1-142.
Pad++ Programmer's Guide version 0.2.7, Jun. 10, 1996 ("Pad++ Programmer's Guide"), p. 1-17.
Pad++ Reference Manual Version 0.2.7, Jul. 9, 1996 ("Pad++ Reference Manual"), p. 1-84.
Watanabe, Mituyoshi, How to Make the Most of the Power Zaurus, Computing Communication Multimedia Mobile—Computing Communication Multimedia, Apr. 14, 1998, pp. PX 1004_1-1004_137.
Power Zaurus Specifications: User Manual—Mobile Business Tool—Model M,I-106 / MI-106M / MI-110M, Nov. 1997, pp. PX 1004_138-1004_650.
Power Zaurus MI-110 / M106 / M106 Brochure, Dec. 1997, pp. PX 1004_651-1004_655.
Power Zaurus MI-610/DC Brochure, Jun. 1998, pp. PX 1004_656-1004_660.
Power Zaurus MI-504/ MI-506/ MI-506DC Brochure, Jul. 1997, pp. PX 1004_661-1004_667.
Power Zaurus Article, PCWatch, Nov. 18, 1997, pp. PX 1004_668-1004_670.

Ferraiolo, Jon, Scalable Vector Graphics Requirements: W3C Working Draft, Oct. 29, 1998, p. 1-16.
Lauff, Markus, and Gellersen, Hans-Werner, "Multimedia client implementation on Personal Digital Assistants", Interactive Distributed Multimedia Systems and Telecommunication Services, 1997, p. 1-13.
"NetHopper 2.0 First true Web browser for Newton". PenComputing Magazine, 1996, retrieved from: http://www.pencomputing.com/archive/PCM_11/nethopper.html, p. 1-3.
Joint Claim Construction Chart (vol. 1 of 2) filed Aug. 31, 2012 in the case of *SoftView LLC* v. *Apple Inc.*, and *AT&T Mobility LLC*, Case No. 10-389-LPS in the United States District court for the District of Delaware, pp. PX 1019a_1-1019a_565.
Joint Claim Construction Chart (vol. 2 of 2) filed Aug. 31, 2012 in the case of *SoftView LLC* v. *Apple Inc.*, and *AT&T Mobility LLC*, Case No. 10-389-LPS in the United States District court for the District of Delaware, pp. PX 1019b_1-1019b_817.
SoftView LLC's Opening Claim Construction Brief filed Sep. 21, 2012 in the case of *SoftView LLC* v. *Apple Inc.*, and *AT&T Mobility LLC*, Case No. 10-389-LPS in the United States District court for the District of Delaware, p. 1-29.
Jan. 20, 2012 Declaration of Jack D, Grimes, Ph.D., submitted by Third Party Requester Apple in Inter Partes Reexamination Nos. 95/000,634 and 95/000,635, p. 1-20.
Apr. 2, 2012 Declaration of Jack D, Grimes, Ph.D., submitted by Third Party Requester Apple in Inter Partes Reexamination No. 95/000,634 and 95/000,635, p. 1-5.
Complaint, *SoftView LLC* v. *Apple Inc. et al.* Case No. 1:10-cv-00389-JJF-LPS, the United States District Court for the District of Delaware.
Report on the Filing or Determination of an Action Regarding a Patent or Trademark Case 1:10-cv-00389-JJF-LPS.
Screenshots compilations of Web pages using Opera 3.60, including: www.Altavista.com—May 1, 1999 www.cnet.com—May 8, 1999 www.excite.com—May 8, 1999 www.nytimes.com—Apr. 22, 1999.
"3.10 WWW Browser," The NEXTSTEP/OpenStep FAQ, 1 pg. (printed on Apr. 5, 2013), available at http://famkoplien.de/henry/NeXT/NeXTFAQ/NeXTFAQ.038.html.
"Mobile browser," Wikipedia, the free encyclopedia, 7 pgs. (printed on Apr. 5, 2013), available at http://en.wikipedia.org/wiki/Mobile_browser.
"Mobile phone," Wikipedia, the free encyclopedia, 13 pgs. (printed on Apr. 5, 2013), available at http://en.wikipedia.org/wiki/Mobile_phones.
Press Releases, Weather Underground Press, The Weather Underground brings weather service to mobile phone users, 2 pgs. (printed on Apr. 5, 2013) available at www.wunderground.com/about/pr/news.asp?date=19970513.
MicroTouch, "TouchWare for Windows NT, User's Guide," Document No. 19-217, Version 2.2, MicroTouch Systems, Inc., 1996, 1998, 144 pages.
Michael J. Albers et al., "User Web Browsing Characteristics Using Palm Handhelds for Information Retrieval," 2000, p. 125-135.
Matt Jones et al., "Improving Web Interaction on Small Displays," 1999, p. 1-11.
Geoffrey M. Voelker et al.: "An Information System for a Mobile Wireless Computing Environment," 1994, p. 1-6.
Terri Watson, "Application Design for Wireless Computing," Dec. 1994, p. 91-94.
Timothy Bickmore et al., "Web Page Filtering and Re-Authoring for Mobile Users," 1999, The Computer Journal, vol. 42, No. 6, p. 534-546.
Softview's Motion to Dismiss & Strike Apple's and AT&T Mobility LLC's Inequitable Conduct Defenses dated Jan. 24, 2011, p. 1-9.
Apple's Opposition to Softview's Motion to Dismiss dated Feb. 7, 2011, p. 1-14.
Stefan Gessler et al., "PDAs as Mobile WWW Browsers," Dec. 1995, University of Karlsruhe, p. 1-11.
"Nokia Unveils World's First All-in-One Communicator for the Americas," ("Nokia"), Sep. 19, 1996, Nokia, p. 1.
"3Com Announces the Palm VII Connected Organizer, the First Handheld Solution for Out-of-the-Box Wireless Internet Access," ("Palm"), Dec. 2, 1998, Palm Computing, Inc., p. 1-5.
"Apple Outlines Plethora of Newton Wireless Communications Solutions at MessagePad 120 Launch," ("Newton"), Jan. 30, 1995, Apple Computer, Inc., p. 1-4.
Benjamin B. Bederson & James D. Hollan, "Pad++: A Zoomable Graphical Interface System," ("Bederson-1"), May 1995, ACM, Chi '95 Mosaic of Creativity, p. 23-24.
George W. Furnas & Benjamin B. Bederson, "Space-Scale Diagrams: Understanding Multiscale Interfaces," ("Bederson-2"), May 1995, ACM Press, Proceedings of CHI '05 Human Factors in Computing Systems, p. 1-12.
Ben Bederson & Jon Meyer, "Implementing a Zooming User Interface: Experience Building Pad++" ("Bederson-4"), Aug. 1998, John Wiley & Sons, Ltd, Software-Practice and Experience, vol. 28(10), p. 1101-1135.
Tim Bray, "XML in XML," ("Bray"), Mar. 18, 1999, XML.com, p. 1-6.
Kaoru Misaki, "Locatio Beginner's Guide," (and English translation thereof) ("Locatio"), Jul. 30, 1999, Cutt Systems, p. 1-179.
Kevin McCluskey, "Mozilla, Widget Library," Jul. 10, 2005, p. 1-5.
Rick Potts, "Mozilla, NGLayout Embedding APIs," Last modified Mar. 9, 1999, p. 1-12.
Michael Plitkins, "Mozilla, View System," Last modified Jan. 14, 1999, p. 1-4.
(Author Unknown), "Mozilla, Threading Model," Last modified Oct. 29, 1998, p. 1-3.
Rick Gessner, "Mozilla, HTML Tag Handling Chart," Last modified Oct. 23, 1998, p. 1-9.
Chris Waterson, "Gecko Overview," Jun. 10, 2002, p. 1-36.
Mike Shaver, Michael Ang, "Inside the Lizard: A Look at the Mozilla Technology and Architecture," May 29, 2000, p. 1-6.
Kipp Hickman, "Mozilla, Base Library Roadmap," Last modified Jul. 15, 1998, p. 1-2.
Kipp Hickman, "Mozilla, The Content Model," Last modified Jul. 15, 1998, p. 1-3.
Vidur Apparao, Tom Pixley, "Mozilla, The NGLayout Document Object Model (DOM) Roadmap," Last modified May 26, 2001, p. 1-12.
Chris Karnaze, "Mozilla, Forms," Last modified Jan. 14, 1999, p. 1-4.
Troy Chevalier et al., "Mozilla, New Layout: HTML Layout," Last modified Jul. 20, 1998, p. 1-7.
(Author Unknown), "Mozilla, Layout Engine Technical Documentation," Last modified Apr. 4, 2008, p. 1-3.
James Everingham, "Mozilla, BAM Roadmap," Last modified Jul. 15, 1998, p. 1-6.
Rick Gessner, "Mozilla, Parsing Engine," Last modified Jul. 15, 1998, p. 1-5.
Michael Plitkins, "Mozilla, Java and Plugins," Last modified Jan. 14, 1999, p. 1-3.
Michael Plitkins, "Mozilla, Printing," Last modified Jan. 14, 1999, p. 1-2.
Michael Plitkins, "Mozilla, Redering," Last modified Jan. 14, 1999, p. 1-6.
Peter Linss, "Mozilla, Style System," Last modified Jul. 15, 1998, p. 1-5.
U.S. Appl. No. 60/288,287.
U.S. Appl. No. 60/159,069 to Chithambaram et al. (Oct. 12, 1999), p. 1-30.
U.S. Appl. No. 60/193,862 to Chithambaram et al. (Mar. 30, 2000), (entire range, 32 pgs.).
Non-Final Office Action for U.S. Appl. No. 09/828,511, mailed Mar. 22, 2004 (not publicly available).
Notice of Allowance for U.S. Appl. No. 11/738,486, issued Jun. 9, 2010 (Notice of Allowability pp. 2-30).
U.S. Appl. No. 11/738,486: Applicants' Comments on Reasons for Allowance, filed Sep. 9, 2010 (entire range, 63 pgs.).
Notice of Allowance for U.S. Appl. No. 11/738,932, issued Jun. 10, 2010 (Notice of Allowability pp. 2-3).
Non-Final Office Action for U.S. Appl. No. 11/735,482, mailed Apr. 27, 2010 (8 pgs.).
Notice of Allowance for U.S. Appl. No. 11/735,482 issued Oct. 4, 2010 (Notice of Allowability, pp. 2-34).
U.S. Appl. No. 11/735,482 Applicants' Comments on Reason for Allowance, filed Oct. 8, 2010 (entire range, 8 pgs).

SoftView Motion for Leave to Amend Complaint, SoftView LLC v Apple Inc et al., filed Nov. 10, 2010 *SoftView LLC* v *Apple Inc et al.*, Case No. 1:10-dv-00389-JJF-LPS, Paper 131, 2 pgs.
Defendant Apple Corporation Answer to Complaint (Revised), filed Aug. 18, 2010 *SoftView LLC* v *Apple Inc et al* ., Case No. 1:10-dv-00389-JJF-LPS, Doc. 16-1, 10 pgs.
Defendant AT&T Corporation Answer to Complaint (Revised), filed Jul. 12, 2010 *SoftView LLC* v *Apple Inc et al.*, Case No. 1:10-dv-00389-JJF-LPS, Doc. 13, 10 pgs.
SoftView LLC Reply to Apple's Answer (Revised), filed Aug. 18, 2010 *SoftView LLC* v *Apple Inc et al.*, Case No. 1:10-dv-00389-JJF-LPS, Doc. 16-2, 5 pgs.
U.S. Appl. No. 60/203,494 to Charles Chui (May 11, 2000) (entire range, 20 pgs.).
Defendants' Supplemental Exhibit A to Invalidity Interrogatory Answers Exhibit 40: Defendants' claim chart for the '926 patent for the New Pad++ References in View of Locatio, (69 pages).
Defendants' Supplemental Exhibit A to Invalidity Interrogatory Answers Exhibit 41: Defendants' claim chart for the '926 patent for the New Pad++ References and the SVF References, (142 pages).
Defendants' Supplemental Exhibit A to Invalidity Interrogatory Answers Exhibit 42: Defendants' claim chart for the '926 patent for the New Pad++ References, (73 pages).
Defendants' Supplemental Exhibit A to Invalidity Interrogatory Answers Exhibit 43: Defendants' claim chart for the '926 patent for the New Pad++ References and the SVF References in View of Newton, (91 pages).
Defendants' Supplemental Exhibit A to Invalidity Interrogatory Answers Exhibit 44: Defendants' claim chart for the '926 patent for the New Pad++ References and the SVF References in View of Locatio, (86 pages).
Defendants' Supplemental Exhibit A to Invalidity Interrogatory Answers Exhibit 45: Defendants' claim chart for the '926 patent for Japanese Application Publication H10-326169 and SVF References, (71 pages).
Defendants' Supplemental Exhibit A to Invalidity Interrogatory Answers Exhibit 46: Defendants' claim chart for the '926 patent for Japanese Application Publication H10-326169 and SVF References in View of Locatio, (147 pages).
Defendants' Supplemental Exhibit A to Invalidity Interrogatory Answers Exhibit 47: Defendants' claim chart for the '926 patent for Japanese Application Publication H10-326169 and SVF References in View of the New Pad++ , (11 pages).
Defendants' Supplemental Exhibit A to Invalidity Interrogatory Answers Exhibit 48: Defendants' claim chart for the '926 patent for Japanese Application Publication H10-326169 and SVF References in View of Fox, (4 pages).
Defendants' Supplemental Exhibit A to Invalidity Interrogatory Answers Exhibit 49: Defendants' claim chart for the '926 patent for Pad++ References and VML, (126 pages).
Defendants' Supplemental Exhibit A to Invalidity Interrogatory Answers Exhibit 50: Defendants' claim chart for the '926 patent for the New Pad++ References and VML in View of Nokia and Palm, (71 pages).
Defendants' Supplemental Exhibit A to Invalidity Interrogatory Answers Exhibit 51: Defendants' claim chart for the '926 patent for for the New Pad++ References and VML in View of Newton, (82 pages).
Defendants' Supplemental Exhibit A to Invalidity Interrogatory Answers Exhibit 52: Defendants' claim chart for the '926 patent for for the New Pad++ References and VML in View of Locatio, (82 pages).
Defendants' Supplemental Exhibit A to Invalidity Interrogatory Answers Exhibit 53: Defendants' claim chart for the '926 patent for Japanese Application Publication H10-326169 and VML, (12 pages).
Defendants' Supplemental Exhibit A to Invalidity Interrogatory Answers Exhibit 54: Defendants' claim chart for the '926 patent for Japanese Application Publication H10-326169 and VML in View of Locatio, (91 pages).
Defendants' Supplemental Exhibit A to Invalidity Interrogatory Answers Exhibit 55: Defendants' claim chart for the '926 patent for Japanese Application Publication H10-326169 and VML in View of New Pad++ References, (10 pages).
Defendants' Supplemental Exhibit A to Invalidity Interrogatory Answers Exhibit 56: Defendants' claim chart for the '926 patent for the Pad++ References, (29 pages).
Defendants' Supplemental Exhibit A to Invalidity Interrogatory Answers Exhibit 57: Defendants' claim chart for the '926 patent for the Pad++ References in View of Nokia and in Further View of Palm, (32 pages).
Defendants' Supplemental Exhibit A to Invalidity Interrogatory Answers Exhibit 58: Defendants' claim chart for the '926 patent for the Pad++ References in View of Newton, (33 pages).
Defendants' Supplemental Exhibit A to Invalidity Interrogatory Answers Exhibit 59: Defendants' claim chart for the '926 patent for the Pad++ References in View of Locatio, (33 pages).
Defendants' Supplemental Exhibit A to Invalidity Interrogatory Answers Exhibit 60: Defendants' claim chart for the '926 patent for Japanese Application Publication H10-326169, (117 pages).
Defendants' Supplemental Exhibit A to Invalidity Interrogatory Answers Exhibit 61: Defendants' claim chart for the '926 patent for Japanese Application Publication H10-326169 in View of Locatio, (199 pages).
Defendants' Supplemental Exhibit A to Invalidity Interrogatory Answers Exhibit 62: Defendants' claim chart for the '926 patent for Japanese Application Publication H10-326169 in View of the Pad++ References, (4 pages).
Defendants' Supplemental Exhibit A to Invalidity Interrogatory Answers Defendants' Supplemental Exhibit A to Invalidity Interrogatory AnswersExhibit 63: Defendants' claim chart for the '926 patent for Japanese Application Publication H10-326169 in View of Fox, (3 pages).
Defendants' Supplemental Exhibit A to Invalidity Interrogatory Answers Exhibit 64: Invalidity Claim Chart for U.S. Patent No. 7,831,926 for claims 52, 55, and 75 of U.S. pub. No. 2002/0091738 (the "Published '097 Application") (3 pgs).
Defendants' Supplemental Exhibit A to Invalidity Interrogatory Answers Exhibit 65: Defendant's Invalidity Claim Chart for the '353 Patent for Zaurus in View of Pad++, (52 pages).
Defendants' Supplemental Exhibit A to Invalidity Interrogatory Answers Exhibit 66: Defendant's Invalidity Claim Chart for the '926 Patent for Zaurus in View of Pad++, (79 pages).
Defendants' Supplemental Exhibit A to Invalidity Interrogatory Answers Exhibit 67: Request for Inter Partes Reexamination of U.S. Patent No. 7,461,353, filed May 20, 2011 (112 pages).
Defendants' Supplemental Exhibit A to Invalidity Interrogatory Answers Exhibit 68: Request for Inter Partes Reexamination of U.S. Patent No. 7,831,926, filed May 20, 2011 (130 pages).
Defendants' Supplemental Exhibit A to Invalidity Interrogatory Answers. Exhibit 69: Petition under 37 CFR 1.927 and 1.181 for Supervisory Review of Refusal to Order Reexamination for Claims 5, 23-27, 33, 43, 58-61, 84, 122, 137-141, 147, 156, 174-177, 183, 220, 238-242, 248, 259, 274-277, and 283 of U.S. Patent No. 7,461,353, filed Sep. 8, 2011 (15 pages).
Defendants' Supplemental Exhibit A to Invalidity Interrogatory Answers Exhibit 70: Petition under 37 CFR 1.927 and 1.181 for Supervisory Review of Refusal to Order Reexamination for Claims 1-51, 59, 69 and 72 of Patent No. 7,831,926, filed Sep. 8, 2011 (14 pages).
Defendants' Supplemental Exhibit A to Invalidity Interrogatory Answers Exhibit 71: Third Party Requester's Comments to Office Action mailed Sep. 30, 2011 and Patent Owner's Response Mailed Dec. 21, 2011 pursuant to 37 CFR 1.947, (from 353 Reexam: Control No. 95/000,634) filed Jan. 20, 2012 (321 pages).
Defendants' Supplemental Exhibit A to Invalidity Interrogatory Answers Exhibit 72: Third Party Requester's Comments to Office Action mailed Oct. 1, 2011 and Patent Owner's Response Mailed Dec. 21, 2011 pursuant to 37 CFR 1.947, (from 926 Reexam: Control No. 95/000,635) filed Jan. 20, 2012 (321 pages).
Defendants' Supplemental Exhibit A to Invalidity Interrogatory Answers Exhibit 73: Request for Ex Parte Reexamination of U.S. Patent No. 7,461,353, filed Apr. 13, 2012 (now Control No. 90/009,994) (359 pgs).

Defendants' Supplemental Exhibit A to Invalidity Interrogatory Answers Exhibit 74: Request for Ex Parte Reexamination of U.S. Patent 7,831,926, filed May 29, 2012 (now Control No. 90/009,995) (687 pgs).
Defendants' Supplemental Exhibit A to Invalidity Interrogatory Answers Exhibit 75: Declaration of Jack D. Grimes, Ph.D., executed Apr. 2, 2012 and filed in Reexam Control No. 95/000,635 (5 pgs).
Defendants' Supplemental Exhibit A to Invalidity Interrogatory Answers Exhibit 76: Invalidity Claim Chart for U.S. Patent No. 7,461,353 for WO00/28518 to Mac Innis ("Mac Innis") in View of Zaurus and Further in View of the Pad++ references and SVG, (41 pages).
Defendants' Supplemental Exhibit A to Invalidity Interrogatory Answers Exhibit 77: Invalidity Claim Chart for U.S. Patent No. 7,461,353 for W09937095-Graphic Image Generation and Coding "'095", (14 pages).
Defendants' Supplemental Exhibit A to Invalidity Interrogatory Answers Exhibit 78: Invalidity Claim Chart for U.S. Patent No. 7,461,353 for Experience with a World Wide Web Client by Joel Bartlett ("Bartlett"), (14 pages).
Defendants' Supplemental Exhibit A to Invalidity Interrogatory Answers Exhibit 79: Invalidity Claim Chart for U.S. Patent No. 7,461,353 for E.A. Bier, et al., Toolglass and Magic Lenses: The See-Through Interface ("Bier"), (52 pages).
Defendants' Supplemental Exhibit A to Invalidity Interrogatory Answers Exhibit 80: Invalidity Claim Chart for U.S. Patent No. 7,461,353 for Krakatoa references, (96 pages).
Defendants' Supplemental Exhibit A to Invalidity Interrogatory Answers Exhibit 81: Invalidity Claim Chart for U.S. Patent No. 7,461,353 for Japanese Laid-open Patent Publication No. 2001-022496 in View of the New Pad++ References and Further in View of VML (57 pages).
Defendants' Supplemental Exhibit A to Invalidity Interrogatory Answers Exhibit 82: Invalidity Claim Chart for U.S. Patent No. 7,461,353 for Breaking the Screen Barrier, Lars Erik Holmquist, Doctoral Dissertation, Goteborg University, Sweden (2000) in View of the New Padd++ References and Further in View of VML, (35 pages).
Defendants' Supplemental Exhibit A to Invalidity Interrogatory Answers Exhibit 83: Invalidity Claim Chart for U.S. Patent No. 7,461,353 for Japanese Patent Application Publication No. Hei 5 [1993]-346923 to Wada ("Wada") in View of Zaurus and Further in View of the Pad++ references and SVG, (21 pages).
Defendants' Supplemental Exhibit A to Invalidity Interrogatory Answers Exhibit 84: Invalidity Claim Chart for U.S. Patent No. 7,831,926 for Japanese WO00/28518 to Mac Innis ("Mac Innis") in View of Zaurus and Further in View of the Pad++ references and SVG, (19 pages).
Defendants' Supplemental Exhibit A to Invalidity Interrogatory Answers Exhibit 85: Invalidity Claim Chart for U.S. Patent No. 7,831,926 for W09937095-Graphic Image Generation and Coding ("'095'"), (8 pages).
Defendants' Supplemental Exhibit A to Invalidity Interrogatory Answers Exhibit 86: Invalidity Claim Chart for U.S. Patent No. 7,831,926 for Experience with a World Wide Web Client by Joel Bartlett ("Bartlett"), (9 pages).
Defendants' Supplemental Exhibit A to Invalidity Interrogatory Answers Exhibit 87: Invalidity Claim Chart for U.S. Patent No. 7,831,926 for E.A. Bier, et al., Toolglass and Magic Lenses: The See-Through Interface ("Bier") (21 pages).
Defendants' Supplemental Exhibit A to Invalidity Interrogatory Answers Exhibit 88: Invalidity Claim Chart for U.S. Patent No. 7,831,926 for Krakatoa references, (49 pages).
Defendants' Supplemental Exhibit A to Invalidity Interrogatory Answers Exhibit 89: Invalidity Claim Chart for U.S. Patent No. 7,831,926 for Japanese Laid-open Patent Publication No. 2001-022496 in View of the New Pad++ References and Further in View of VML, (33 pages).
Bier, Eric A. et al., "Toolglass and Magic Lenses: The See-Through Interface," Proceedings of Siggraph '93 (Anaheim, Aug.), Computer Graphics Annual Conference Series 73-80 ACM, 1993, pp. 73-80 ("Bier").
SoftSource Press Release, "New CAD System Works with AutoCAD Drawings Without Translation," released Jun. 17, 1996, retrieved from: http://web.archive.org/web11996101052917 http://softsource.com/net-news.html, 2 pages. (SVF Press 1).
SoftSource Press Release, "Bring New CAD Viewing Power to the Internet," released Mar. 4, 1996, retrieved from http://web.archive.org/web/1996101052917 http://softsource.com/net-news.html, 1 page. (SVF Press 2).
Kamada, Tomihisa, "Compact HTML for Small Information Appliances," W3C, Feb. 9, 1998 (16 pages) http://www.w3.org/TR1998/NOTE-compactHTML-19980209/ (PX 1014) Submitted by Petitioner's in IPRs 2013-00004, -00007, -00256, -00257.
Second Amended Complaint filed Sep. 30, 2011 in the case of *SoftView LLC* v. *Apple Inc*., and AT&T Mobility LLC, Case No. 10-389-LPS in the United States District Vourt for the District of Delaware (PX1018) (110 pages) Submitted by Petitioner in IPRs 2013-00004, -00007, -00256, -00257.
Softview LLC's Responses to Motorola Mobility, Inc.'s First Set of Interrogatories (No. 1), Case 10-389-LPS (90 pages) (PX 1027) Submitted by Petitioner in IPRs 2013-00004, -00007, -00256, -00257.
Declaration of Hidekazu Takahashi, Sep. 25, 2012 (464 pages) (PX 1028) Submitted by Petitioner in IPRs 2013-00004, -00007, -00256, -00257.
Declaration of Manabu Toda, Sep. 18, 2012 (462 pages) (PX 1029) Submitted by Petitioner in IPRs 2013-00004, -00007, -00256, -00257.
Huawei Technologies Co., Ltd and Futurewei Technologies, Inc.'s Fourth Supplemental Responses to Softview LLC's First Set of Common Interrogatories (Nos. 1-4) (10 pages).
Apple Inc.'s Objections and Responses to Softview LLC's First Set of Interrogatories (Nos. 1-10), Jan. 3, 2010, in the case of *SoftView LLC* v *Apple, Inc*., et al., Case No. 10-389-LPS(D.Delaware), (22 pages).
Huawei Technologies Co., Ltd. and Futurewei Technologies, Inc.'s Sixth Supplemental Responses to Softview LLC's First Set of Common Interrogatories (Nos. 1&2) including Supplemental Exhibits 110-113, Mar. 14, 2013, in the case of *SoftView LLC* v *Apple, Inc*., et al., Case No. 10-389-LPS (D.Delaware), (119 pages).
Defendants' Supplemental Exhibit A to Invalidity Interrogatory Answers.Exhibit 1: Defendants' claim chart for the '353 patent for the New Pad++ References, (228 pages)
Defendants' Supplemental Exhibit A to Invalidity Interrogatory Answers Exhibit 2: Defendants' claim chart for the '353 patent for Japanese Application Publication H10-326169 and VML, (231 pages).
Defendants' Supplemental Exhibit A to Invalidity Interrogatory Answers Exhibit 3: Defendants' claim chart for the '353 patent for the New Pad++ References, (112 pages).
Defendants' Supplemental Exhibit A to Invalidity Interrogatory Answers Exhibit 4: Defendants' claim chart for the '353 patent for Japanese Application Publication H10-326169 and VML, (205 pages).
Defendants' Supplemental Exhibit A to Invalidity Interrogatory Answers Exhibit 5: Defendants' claim chart for the '353 patent for the New Pad++ References, (179 pages).
Defendants' Supplemental Exhibit A to Invalidity Interrogatory Answers Exhibit 6: Defendants' claim chart for the '353 patent for Japanese Application Publication H10-326169 and VML, (259 pages).
Defendants' Supplemental Exhibit A to Invalidity Interrogatory Answers Exhibit 7: Defendants' claim chart for the '353 patent for the New Pad++ References, (182 pages).
Defendants' Supplemental Exhibit A to Invalidity Interrogatory Answers Exhibit 8: Defendants' claim chart for the '353 patent for Japanese Application Publication H10-326169 and VML, (261 pages).
Defendants' Supplemental Exhibit A to Invalidity Interrogatory Answers Exhibit 9: Defendants' claim chart for the '353 patent for the New Pad++ References, (168 pages).

Defendants' Supplemental Exhibit A to Invalidity Interrogatory Answers Exhibit 10: Defendants' claim chart for the '353 patent for Japanese Application Publication H10-326169 and VML, (237 pages).
Defendants' Supplemental Exhibit A to Invalidity Interrogatory Answers Exhibit 11: Defendants' claim chart for the '353 patent for the New Pad++ References and the SVF References, (344 pages).
Defendants' Supplemental Exhibit A to Invalidity Interrogatory Answers Exhibit 12: Defendants' claim chart for the '353 patent for the New Pad++ References and the SVF References, (103 pages).
Defendants' Supplemental Exhibit A to Invalidity Interrogatory Answers Exhibit 13: Defendants' claim chart for the '353 patent for the New Pad++ References and the SVF References, (246 pages).
Exhibit 14: Defendants' claim chart for the '353 patent for the New Pad++ References and the SVF References, (196 pages).
Exhibit 15: Defendants' claim chart for the '353 patent for the New Pad++ References and the SVF References, (174 pages).
Defendants' Supplemental Exhibit A to Invalidity Interrogatory Answers Exhibit 16: Defendants' claim chart for the '353 patent for the New Pad++ References and the SVF References, (235 pages).
Defendants' Supplemental Exhibit A to Invalidity Interrogatory Answers Exhibit 17: Defendants' claim chart for the '353 patent for Japanese Application Publication H10-326169 and the SVF References, (364 pages).
Defendants' Supplemental Exhibit A to Invalidity Interrogatory Answers Exhibit 18: Defendants' claim chart for the '353 patent for Japanese Application Publication H10-326169 and the SVF References, (75 pages).
Defendants' Supplemental Exhibit A to Invalidity Interrogatory Answers Exhibit 19: Defendants' claim chart for the '353 patent for Japanese Application Publication H10-326169 and the SVF References, (229 pages).
Defendants' Supplemental Exhibit A to Invalidity Interrogatory Answers Exhibit 20: Defendants' claim chart for the '353 patent for Japanese Application Publication H10-326169 and the SVF References, (208 pages).
Defendants' Supplemental Exhibit A to Invalidity Interrogatory Answers Exhibit 21: Defendants' claim chart for the '353 patent for Japanese Application Publication H10-326169 and the SVF References, (207 pages).
Defendants' Supplemental Exhibit A to Invalidity Interrogatory Answers Exhibit 22: Defendants' claim chart for the '353 patent for Japanese Application Publication H10-326169 and the SVF References, (259 pages).
Defendants' Supplemental Exhibit A to Invalidity Interrogatory Answers Exhibit 23: Defendants' claim chart for the '353 patent for the New Pad++ References and VML, (260 pages).
Defendants' Supplemental Exhibit A to Invalidity Interrogatory Answers Exhibit 24: Defendants' claim chart for the '353 patent for Japanese Application Publication H10-326169 and the SVF References, (79 pages).
Defendants' Supplemental Exhibit A to Invalidity Interrogatory Answers Exhibit 25: Defendants' claim chart for the '353 patent for the New Pad++ References and VML, (226 pages).
Defendants' Supplemental Exhibit A to Invalidity Interrogatory Answers Exhibit 26: Defendants' claim chart for the '353 patent for the New Pad++ References and VML, (197 pages).
Defendants' Supplemental Exhibit A to Invalidity Interrogatory Answers Exhibit 27: Defendants' claim chart for the '353 patent for the New Pad++ References and VML, (197 pages).
Defendants' Supplemental Exhibit A to Invalidity Interrogatory Answers Exhibit 28: Defendants' claim chart for the '353 patent for the New Pad++ References and VML, (275 pages).
Defendants' Supplemental Exhibit A to Invalidity Interrogatory Answers Exhibit 29: Defendants' claim chart for the '353 patent for Japanese Application Publication H10-326169 and VML, (333 pages).
Defendants' Supplemental Exhibit A to Invalidity Interrogatory Answers Exhibit 30: Defendants' claim chart for the '353 patent for Japanese Application Publication H10-326169 and VML, (76 pages).
Defendants' Supplemental Exhibit A to Invalidity Interrogatory Answers Exhibit 31: Defendants' claim chart for the '353 patent for New Pad++ References, (187 pages).
Defendants' Supplemental Exhibit A to Invalidity Interrogatory Answers Exhibit 32: Defendants' claim chart for the '353 patent for the Pad++ References in View of Bray, (4 pages).
Defendants' Supplemental Exhibit A to Invalidity Interrogatory Answers Exhibit 33: Defendants' claim chart for the '353 patent for Japanese Application Publication H10-326169 (338 pages).
Defendants' Supplemental Exhibit A to Invalidity Interrogatory Answers Exhibit 34: Defendants' claim chart for the '353 patent for Japanese Application Publication H10-326169 in view of Bray (4 pages).
Defendants' Supplemental Exhibit A to Invalidity Interrogatory Answers Exhibit 35: Defendants' claim chart for the '353 patent for Japanese Application Publication H10-326169 in View of the Pad++ References, (53 pages).
Defendants' Supplemental Exhibit A to Invalidity Interrogatory Answers Exhibit 36: Defendants' claim chart for the '353 patent for Japanese Application Publication H10-326169 in view of the Fox References, (51 pages).
Defendants' Supplemental Exhibit A to Invalidity Interrogatory Answers Exhibit 37: Defendants' claim chart for the '353 patent for the New Pad++ References, (115 pages).
Defendants' Supplemental Exhibit A to Invalidity Interrogatory Answers Exhibit 38: Defendants' claim chart for the '353 patent for the New Pad++ References in View of Nokia and in Further View of Palm, (68 pages).
Defendants' Supplemental Exhibit A to Invalidity Interrogatory Answers Exhibit 39: Defendants' claim chart for the '353 patent for the New Pad++ References in View of Newton, (69 pages).
Defendants' Supplemental Exhibit A to Invalidity Interrogatory Answers Exhibit 90: Invalidity Claim Chart for U.S. Patent No. 7,831,926 for Breaking the Screen Barrier, Lars Erik Holmquist, Doctoral Dissertation, Goteborg University, Sweden (2000) in View of the New Pad++ References and Further in View of VML, (19 pages).
Defendants' Supplemental Exhibit A to Invalidity Interrogatory Answers Exhibit 91: Invalidity Claim Chart for U.S. Patent No. 7,831,926 for Japanese Patent Application Publication No. Hei 5 [1993] to Wada ("Wada") in view of Zaurus and Further in View of the Pad++ references and SVG, (12 pages).
Defendants' Supplemental Exhibit A to Invalidity Interrogatory Answers Exhibit 92: Invalidity Claim Chart for U.S. Patent No. 7,461,353 for U.S. Patent No. 6,553,393 to Eilbott et al. in view of the VML References, (46 pages).
Defendants' Supplemental Exhibit A to Invalidity Interrogatory Answers Exhibit 93: Invalidity Claim Chart for U.S. Patent No. 7,461,353 for U.S. Patent No. 6,553,393 to Eilbott et al. in view of the SVG Requirements, (44 pages).
Defendants' Supplemental Exhibit A to Invalidity Interrogatory Answers Exhibit 94: Invalidity Claim Chart for U.S. Patent No. 7,461,353 for U.S. Patent No. 6,553,393 to Eilbott et al., (49 pages).
Defendants' Supplemental Exhibit A to Invalidity Interrogatory Answers Exhibit 95: Invalidity Claim Chart for U.S. Patent No. 7,461,353 for U.S. Patent No. 6,456,305 to Qureshi, (34 pages).
Defendants' Supplemental Exhibit A to Invalidity Interrogatory Answers Exhibit 96: Invalidity Claim Chart for U.S. Patent No. 7,461,353 for U.S. Patent No. 5,897,644 to Nielsen, (58 pages).
Defendants' Supplemental Exhibit A to Invalidity Interrogatory Answers Exhibit 97: Invalidity Claim Chart for U.S. Patent No. 7,461,353 for the Top Gun References, (30 pages).
Defendants' Supplemental Exhibit A to Invalidity Interrogatory Answers Exhibit 98: Invalidity Claim Chart for U.S. Patent No. 7,831,926 for U.S. Patent No. 6,553,393 for Eilbott et al. in view of the VML Specifications, (36 pages).
Defendants' Supplemental Exhibit A to Invalidity Interrogatory Answers Exhibit 99: Invalidity Claim Chart for U.S. Patent No. 7,831,926 for U.S. Patent No. 6,553,393 to Eilbott et al. in view of the SVG Requirements, (33 pages).
Defendants' Supplemental Exhibit A to Invalidity Interrogatory Answers Exhibit 100: Invalidity Claim Chart for U.S. Patent No. 7,831,926 for U.S. Patent No. 6,553,393 to Eilbott et al., (41 pages).
Defendants' Supplemental Exhibit A to Invalidity Interrogatory Answers Exhibit 101: Invalidity Claim Chart for U.S. Patent No. 7,831,926 for U.S. Patent No. 5,897,644 to Nielsen, (48 pages).

Defendants' Supplemental Exhibit A to Invalidity Interrogatory Answers Exhibit 102: Invalidity Claim Chart for U.S. Patent No. 7,831,926 for U.S. Patent No. 6,456,305 to Qureshi, (29 pages).
Defendants' Supplemental Exhibit A to Invalidity Interrogatory Answers Exhibit 103: Invalidity Claim Chart for U.S. Patent No. 7,831,926 for for the Top Gun References, (29 pages).
Defendants' Supplemental Exhibit A to Invalidity Interrogatory Answers Exhibit 104: Invalidity Claim Chart for U.S. Patent No. 7,461,353 for U.S. Patent No. 6,553,393 to Eilbott et al. in view of SVF, (33 pages).
Defendants' Supplemental Exhibit A to Invalidity Interrogatory Answers Exhibit 105: Invalidity Claim Chart for U.S. Patent No. 7,831,926 for U.S. Patent No. 6,553,393 to Eilbott et al. and SVF, (26 pages).
Defendants' Supplemental Exhibit A to Invalidity Interrogatory Answers Exhibit 106: Invalidity Claim Chart for U.S. Patent No. 7,461,353 for U.S. Patent No. 6,449,639 to Blumberg, (33 pages).
Defendants' Supplemental Exhibit A to Invalidity Interrogatory Answers Exhibit 107: Invalidity Claim Chart for U.S. Patent No. 7,831,926 for U.S. Patent No. 6,449,639 to Blumberg, (11 pages).
Defendants' Supplemental Exhibit A to Invalidity Interrogatory Answers Exhibit 108: Invalidity Claim Chart for U.S. Patent No. 7,461,353 for Pad++ version 0.9b2 source code (DEFSC000003) and related references and Dr. Benjamin Bederson deposition testimony, (92 pages).
Defendants' Supplemental Exhibit A to Invalidity Interrogatory Answers Exhibit 109: Invalidity Claim Chart for U.S. Patent No. 7,831,926 for Pad++ version 0.9b2 source code (DEFSC000003) and related references and Dr. Benjamin Bederson deposition testimony, (44 pages).
Defendants' Supplemental Exhibit A to Invalidity Interrogatory Answers Exhibit 110: Invalidity Claim Chart for U.S. Patent No. 7,461,353 for WEST: A Web Browser for Small Terminals, Bjork et al. (Bjork reference), (25 pages).
Defendants' Supplemental Exhibit A to Invalidity Interrogatory Answers Exhibit 111: Invalidity Claim Chart for U.S. Patent No. 7,831,926 for WEST: A Web Browser for Small Terminals, Bjork et al. (Bjork reference), (25 pages)831,926 for WEST: A Web Browser for Small Terminals, Bjork et al. (Bjork reference), (12 pages).
Defendants' Supplemental Exhibit A to Invalidity Interrogatory Answers Exhibit 112: Invalidity Claim Chart for U.S. Patent No. 7,461,353 for U.S. Patent No. 6,466,203 ('203 patent), (35 pages).
Defendants' Supplemental Exhibit A to Invalidity Interrogatory Answers Exhibit 113: Invalidity Claim Chart for U.S. Patent No. 7,831,926 for U.S. Patent No. 6,466,203 ('203 patent), (12 pages).
Defendants' Supplemental Exhibit A to Invalidity Interrogatory Answers Exhibit 114: Invalidity Claim Chart for U.S. Patent No. 7,461,353 for NextStep/OpenStep, (46 pages).
Defendants' Supplemental Exhibit A to Invalidity Interrogatory Answers Exhibit 114 (supplemental): Invalidity Claim Chart for U.S. Patent No. 7,461,353 for NextStep/OpenStep, (69 pages).
Defendants' Supplemental Exhibit A to Invalidity Interrogatory Answers Exhibit 115: Invalidity Claim Chart for U.S. Patent No. 7,831,926 for NextStep/OpenStep, (32 pages).
Defendants' Supplemental Exhibit A to Invalidity Interrogatory Answers Exhibit 115 (supplemental): Invalidity Claim Chart for U.S. Patent No. 7,831,926 for NextStep/OpenStep, (55 pages).
Defendants' Supplemental Exhibit A to Invalidity Interrogatory Answers Exhibit 116: Invalidity Claim Chart for U.S. Patent No. 7,461,353 for Mozilla, (14 pages).
Defendants' Supplemental Exhibit A to Invalidity Interrogatory Answers Exhibit 116: Invalidity Claim Chart for U.S. Patent No. 7,461,353 for Mozilla/Gecko, (28 pages).
Defendants' Supplemental Exhibit A to Invalidity Interrogatory Answers Exhibit 117: Invalidity Claim Chart for U.S. Patent No. 7,831,926 for Mozilla, (7 pages).
Defendants' Supplemental Exhibit A to Invalidity Interrogatory Answers Exhibit 117: Invalidity Claim Chart for U.S. Patent No. 7,831,926 for Mozilla/Gecko, (16 pages).
Defendants' Supplemental Exhibit A to Invalidity Interrogatory Answers Exhibit 118: Invalidity Claim Chart for U.S. Patent No. 7,461,353 for U.S. Patent 6,724,403 ('403 patent), (98 pages).
Defendants' Supplemental Exhibit A to Invalidity Interrogatory Answers Exhibit 119: Invalidity Claim Chart for U.S. Patent No. 7,831,926 for U.S. Patent No. 6,724,403 ('403 patent), (44 pages).
Defendants' Supplemental Exhibit A to Invalidity Interrogatory Answers Exhibit 120: Exhibit 117: Invalidity Claim Chart for U.S. Patent No. 7,461,353 for U.S. Patent No. 6,133,916 ('916 patent), (71 pages).
Defendants' Supplemental Exhibit A to Invalidity Interrogatory Answers Exhibit 121: Invalidity Claim Chart for U.S. Patent No. 7,831,926 for No. 6,133,916 ('916 patent), (42 pages).
Defendants' Supplemental Exhibit A to Invalidity Interrogatory Answers Exhibit 122: Invalidity Claim Chart for U.S. Patent No. 7,461,353 for Portable Document Format Reference Manual, version 1.2 ("Adobe PDF"), (526 pages).
Defendants' Supplemental Exhibit A to Invalidity Interrogatory Answers Exhibit 123: Invalidity Claim Chart for U.S. Patent No. 7,831,926 for Portable Document Format Reference Manual, version 1.2 ("Adobe PDF"), (342 pages).
Defendants' Supplemental Exhibit A to Invalidity Interrogatory Answers Exhibit 124: Invalidity Claim Chart for U.S. Patent No. 7,461,353 for Anwar, U.S. Patent No. 7,055,095, (118 pages).
Defendants' Supplemental Exhibit A to Invalidity Interrogatory Answers Exhibit 125: Invalidity Claim Chart for U.S. Patent No. 7,831,926 for Anwar, U.S. Patent No. 7,055,095, (64 pages).
Defendants' Supplemental Exhibit A to Invalidity Interrogatory Answers Exhibit 126: Invalidity Claim Chart for U.S. Patent No. 7,461,353 for Openpix, (13 pages).
Defendants' Supplemental Exhibit A to Invalidity Interrogatory Answers Exhibit 127: Invalidity Claim Chart for U.S. Patent No. 7,831,926 for Openpix, (7 pages).
Defendants' Supplemental Exhibit A to Invalidity Interrogatory Answers Exhibit 128: Invalidity Claim Chart for U.S. Patent No. 7,461,353 for Obviousness References, (107 pages).
Defendants' Supplemental Exhibit A to Invalidity Interrogatory Answers Exhibit 129: Invalidity Claim Chart for U.S. Patent No. 7,831,926 for Obviousness References, (107 pages).
Defendants Samsung Electronic So., Ltd.'s, Samsung Electronics America, Inc.'s and Samsung Telecommunications America, LLC's First Supplemental Objections and Responses to Plaintiff Softview LLC's First Set of Individual Interrogatories (as to Nos. 1-2), 18 pages.
Kamba, T., Bharat, K., Albers, M., The Krakatoa Chronicle-An Interactive, Personalized Newspaper on the Web, Proc. 4th Int'l WWW Conference, Dec. 11-14, 1995 (http://www.w3.org/Conferences/WWW4/Papers/93/) ("Krakatoa-1"); printed version appears in World Wide Web Journal: Fourth Int'l World Wide Web Conference, Con. Proc., Dec. 11-14, 1995 (O'Reilly & Assocs., Inc.), pp. 159-170.
Kamba, T., Bharat K., "An interactive personalized newspaper on the WWW", SPIE Proceedings vol. 2667, Georgia Institute of Technology, Atlanta, GA, Multimedia Computing and Networking 1996, Springer, pp. 290-301 ("Krakatoa-2").
Bharat, K., Kamba, T., Albers, M., Personalized, Interactive News on the Web, Georgia Institute of Technology, Atlanta, GA., 6 Multimedia Systems, Springer Publishing, pp. 349-358, Sep. 1998 (Krakatoa-3).
Ossanna, J., Kernighan, B., "Troll User's Manual", Computing Science Technical Report No. 54, AT&T Bell Laboratories, 1992 ("Troff"), 37 pages.
Holmquist, Lars Erik, "Breaking the Screen Barrier," Doctoral Dissertation, Gothenburg Studies in Informatics, Sweden, Report 16, May 2000, ISSN 1400-741X, 152 pages.
Postscript Language Reference Manual, 2nd ed., Adobe Systems Incorporated, Addison-Wesley Publishing, 1990 (Postcript 2d), 774 pgs.
Postscript Language Reference Manual, 3rd ed., Adobe Systems Incorporated, Addison-Wesley Publishing,1990 (Postcript 3d), 912 pgs.
Chawathe, Y. et al., "A Proxy Architecture for Reliable Multicast in Heterogeneous Environments," in Proceedings of ACM Multimedia '98 (1998) ("Chawathe 1").

Chawathe and Brewer, "System Support for Scalable and Fault Tolerant Internet Services," Distributed Systems Engineering 6.1, The British Computer Society, Inst. of Electrical Engineers and Inst. of Physics Publishing (1999): 23 ("Chawathe 2").
Fox, A. et al., "Adapting to Network and Client Variation Using Infrastructural Proxies: Lessons and Proxies," IEEE Personal Communications Special Issue: Adapting to Network and Client Variability 5(4) (Aug. 1998) ("Fox 2").
Bienz, Tim et al., "Portable Document Format Reference Manual," version 1.2, Adobe Systems Incorporated (Nov. 12, 1996), 394 pgs.
Business Wire, "HP Unveils Seven OpenPix Products, Dramatic Enhancements to Imagelgniter Software; HP Now Offers the Most Complete Range of Internet Imaging Products and Services," Gale Group, Business Wire, Dec. 15, 1998.
Bederson, Benajim B. et al., "A Zooming Web Browser" SPIE pp. 1-12, University of New Mexico, Albuquerque, NM (1996), available at http://www.cs.umd.edu/hcil/jazz/learn/papers/spie-96-web-browserpdf, 12 pgs.
Boye, Janus, "SVG Brings Fast Vector Graphics to Web," irt.org, Home Articles FAQs XREF Game Software Instant Books BBS About FOLDOC RFCs Feedback Sitemap (Jul. 29, 1999), available at http://www.irt.org/articles/js176/, 8 pgs. (printed on May 29, 2013).
Mulder, Steve, "Sneak Peak at SVG," webmonkey-The Web Developer's Resource, Wired Digital Inc., a Lycos Network site (Mar. 4, 1999), 9 pgs. (printed on May 29, 2013).
World Wide Web Consortium, Scalable Vector Graphics (SVG) 1.0 Specification, W3C Candidate Recommendation (Nov. 2, 2000), 513 pgs.
Introduction to SVG, part of WD-SVG-19990211, 1999, 3 pgs. (printed on May 29, 2013), available at http://www.w3.org/TR11999/WD-SVG-19990211/intro.html#Document.
"Programming the Display PostScript System with NeXTstep," Adobe Systems Incorporated, Addison-Wesley Publishing Co, 1992.
Gervae, Nik et al., "Developing Business Applications with OpenStep," Springer-Verlag, New York (1997), 297 pages.
Bartlett, Joel, "Experience with a World Wide Web Client," Western Research Laboratory, Mar. 1995, Palo Alto, CA (portion of material presented at IEEE Workshop on Mobile Computing Systems and Applications, Dec. 1994, Santa Cruz, CA).
"Solo 2100 network problem," Apr. 24, 2005, 5 pgs (printed on Apr. 4, 2013), available at http://www.tomshardware.com/forum/13199-2-solo-2100-network.
"3.10 WWW Browser," The NEXTSTEP/OpenStep FAQ, 1 pg. (printed on Apr. 4, 2013), available at http://famkoplien.de/henry/NeXT/NeXTFAQ/NeXTFAQ.038.html.
"Creating an OPENSTEP Boot CD," Think Simple, Live Simple, Sep. 18, 2010, 4 pgs. (printedon Apr. 5, 2013), available at http://peterwong.net/blog/?p=119].
"NeXTSTEP," Wikipedia, the free encyclopedia, 7 pgs. (printed on Apr. 4, 2013), available at http://en.wikipedia.org/wiki/NeXTSTEP.
"OpenStep," Wikipedia, the free encyclopedia, 9 pgs. (printed on Apr. 4, 2013), available at http://en.wikipedia.org/wiki/OpenStep.
"World Wide Web," Wikipedia, the free encyclopedia, 23 pgs. (printed on Apr. 4, 2013), available at http://en.wikipedia.org/wiki/World_wide_web.
"WorldWideWeb," Wikipedia, the free encyclopedia, 4 pgs. (printed on Apr. 4, 2013), available at http://en.wikipedia.org/wiki/WorldWideWeb.
Omniweb Screenshot, 1998, 2 pgs. (printed on Apr. 4, 2013), available at: http://web.archive.org/web/19980522165125/ http://omnigroup.com/Software/OmniWeb/3/Screenshots/Screenshot.jpg.
dpsops.h, Adobe Systems Incorporated, 1994, 16 pgs. (printed on Apr. 5, 2013), available at http://slackware.dreamhost.com/slackware/slackware-8.0/live/usr/X11/include/DPS/dpsops.h.
"Gateway Support—Solo 2100 Specifications," Gateway Support Documents, 4 pgs. (printed on Apr. 4, 2013).
Amazon.com: Netgear MA401 802.11b Wireless PC Card, 6 pgs. (printed on Apr. 4, 2013).
"Quick Installation Guide: WaveLAN/IEEE Turbo 11 Mb PC Card," Lucent Technologies, Sep. 1999, 220 pgs.
"Netsurfer 2.0 RC2 (Netkit 1.0 RC2)," Sep. 30, 1996, 6 pgs.
"4Drawing," NeXTstep Release 3.3, 1995, 80 pgs. (printed on Apr. 5, 2013).
Sloss, Joel, "Run NT on Laptops? Yes, You Can,!," Mar. 1, 1997, 12 pgs. (printed on Apr. 4, 2013), available at http://windowsitpro.com/hardware/run-nt-laptops-yes-you-can.
Lie, Hakon Wium et al., "Chapter 20: The CSS saga," Cascading Style Sheets, designing for the Web, 1999, 4 pgs. (printed on Apr. 5, 2013).
"Netsurfer(tm) for OPENSTEP," Netsurfer(tm) Product Information, Jan. 26, 1997, 1 pg. (pritned on Apr. 4, 2013).
"Netkit(tm) Web Development Platform," Netkit(tm) Product Information, Jan. 26, 1997, 2 pgs. (printed on Apr. 4, 2013).

* cited by examiner

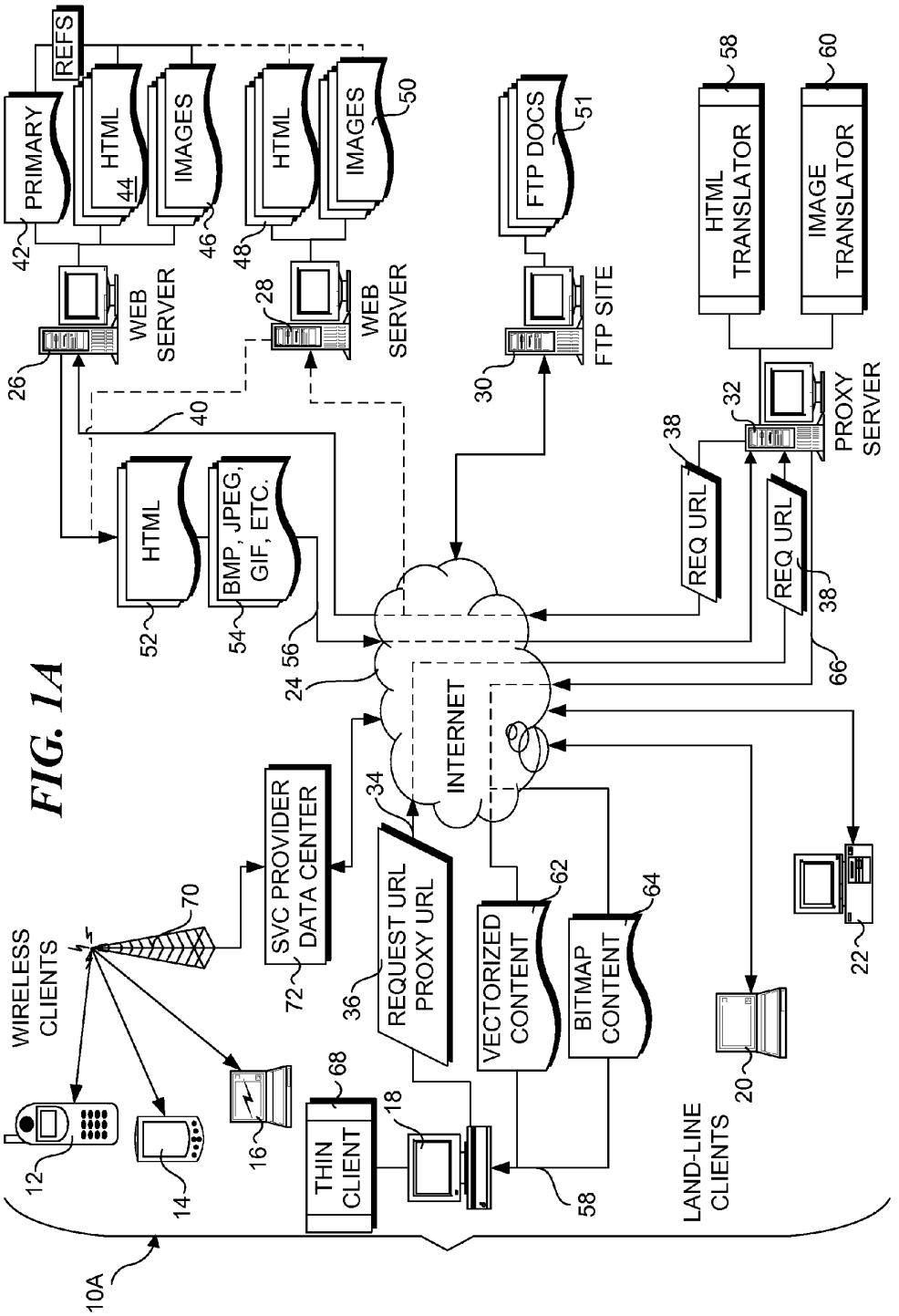
PRIMARY
REFS
HTML
IMAGES
HTML
IMAGES
FTP DOCS
HTML TRANSLATOR
IMAGE TRANSLATOR
WEB SERVER
WEB SERVER
FTP SITE
PROXY SERVER
HTML
BMP, JPEG, GIF, ETC.
REQ URL
REQ URL
INTERNET
SVC PROVIDER DATA CENTER
REQUEST URL PROXY URL
VECTORIZED CONTENT
BITMAP CONTENT
WIRELESS CLIENTS
THIN CLIENT
LAND-LINE CLIENTS
10A
12
14
16
18
20
22
24
26
28
30
32
34
36
38
38
40
42
44
46
48
50
51
52
54
56
58
58
60
62
64
66
68
70
72

FIG. 1A

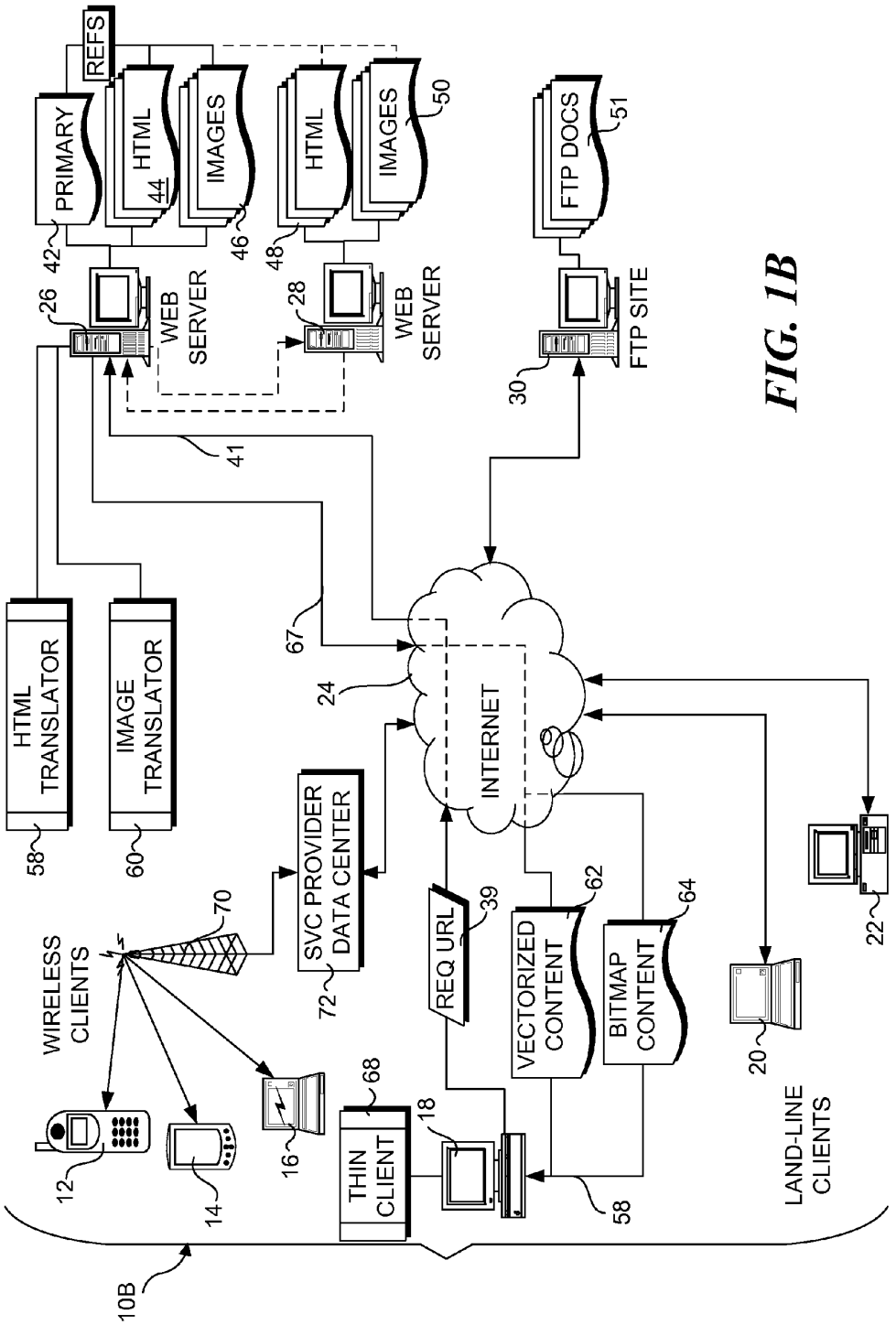
REFS
PRIMARY
HTML
44
IMAGES
HTML
IMAGES
50
FTP DOCS
51
42
46
48
26
WEB SERVER
28
WEB SERVER
FTP SITE
30
41
67
24
INTERNET
HTML TRANSLATOR
IMAGE TRANSLATOR
58
60
SVC PROVIDER DATA CENTER
72
REQ URL
39
VECTORIZED CONTENT
62
BITMAP CONTENT
64
22
20
LAND-LINE CLIENTS
WIRELESS CLIENTS
70
12
14
16
68
THIN CLIENT
18
58
10B

FIG. 1B

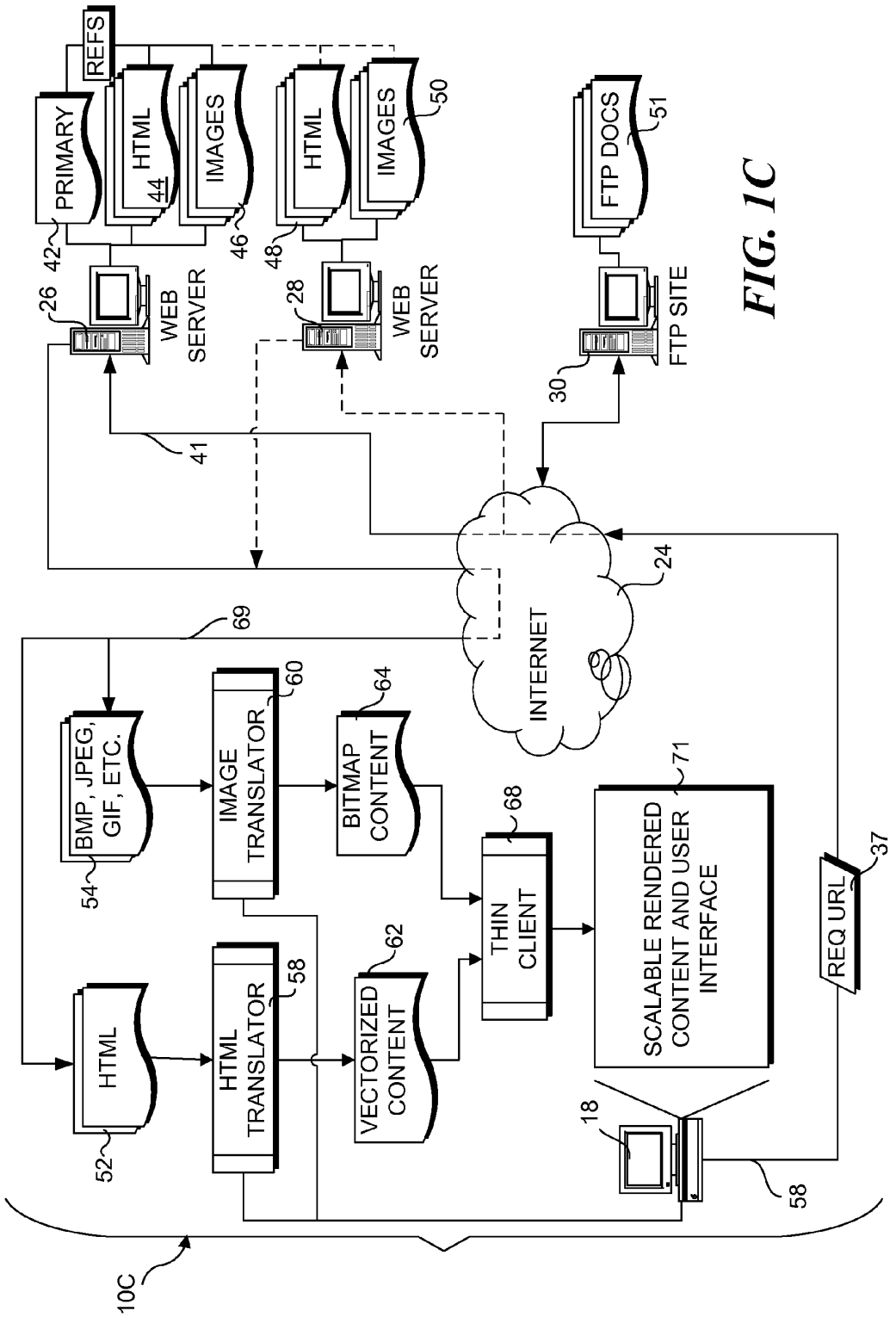
PRIMARY
REFS
HTML
44
IMAGES
42
46
26
WEB SERVER
41
HTML
IMAGES
50
48
28
WEB SERVER
FTP DOCS
51
30
FTP SITE
INTERNET
24
69
BMP, JPEG, GIF, ETC.
54
IMAGE TRANSLATOR
60
BITMAP CONTENT
64
THIN CLIENT
68
SCALABLE RENDERED CONTENT AND USER INTERFACE
71
REQ URL
37
HTML
52
HTML TRANSLATOR
58
VECTORIZED CONTENT
62
18
58
10C

FIG. 1C

FIG. 2A

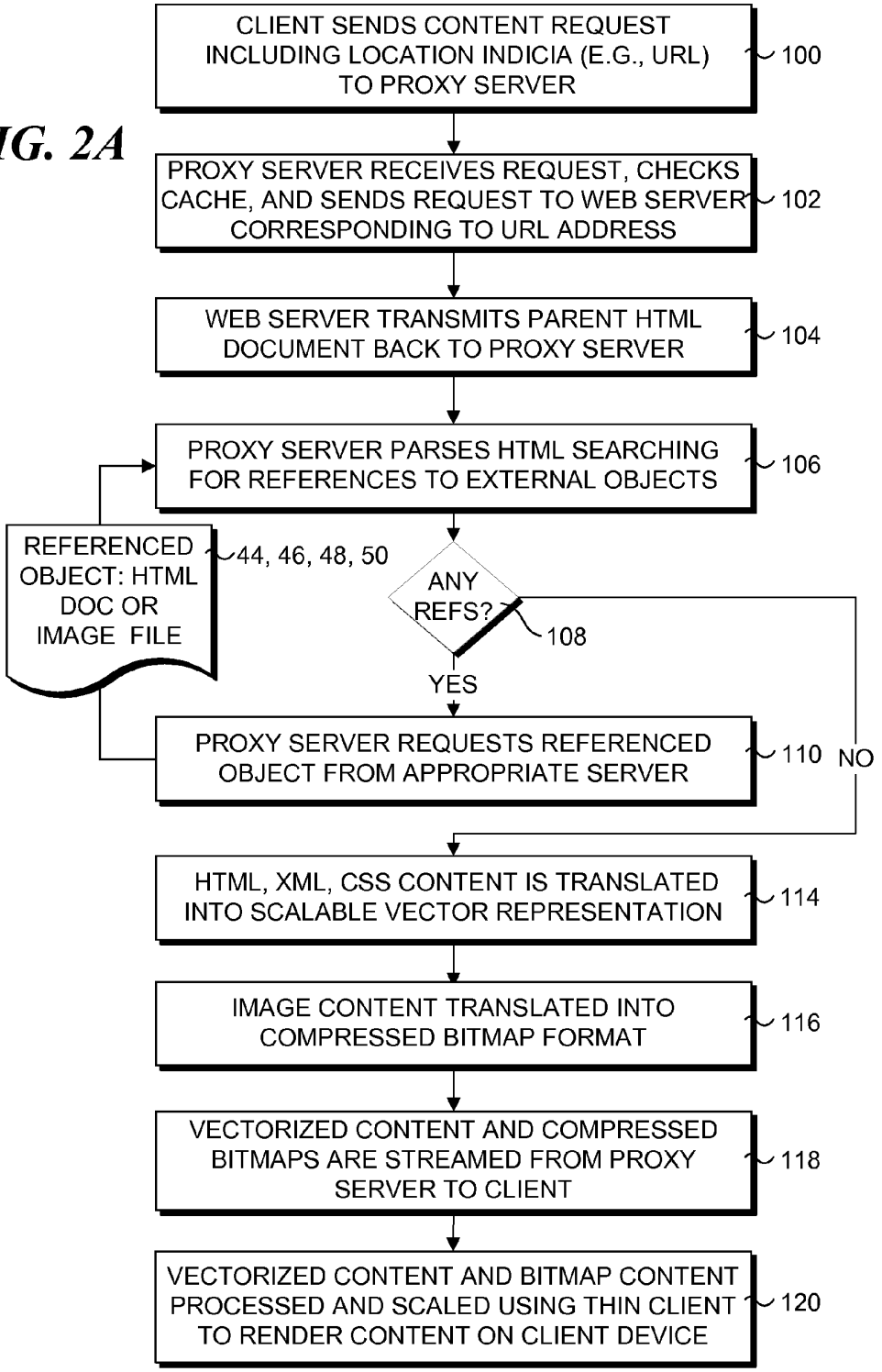
CLIENT SENDS CONTENT REQUEST INCLUDING LOCATION INDICIA (E.G., URL) TO PROXY SERVER
100
PROXY SERVER RECEIVES REQUEST, CHECKS CACHE, AND SENDS REQUEST TO WEB SERVER CORRESPONDING TO URL ADDRESS
102
WEB SERVER TRANSMITS PARENT HTML DOCUMENT BACK TO PROXY SERVER
104
PROXY SERVER PARSES HTML SEARCHING FOR REFERENCES TO EXTERNAL OBJECTS
106
REFERENCED OBJECT: HTML DOC OR IMAGE FILE
44, 46, 48, 50
ANY REFS?
108
YES
NO
PROXY SERVER REQUESTS REFERENCED OBJECT FROM APPROPRIATE SERVER
110
HTML, XML, CSS CONTENT IS TRANSLATED INTO SCALABLE VECTOR REPRESENTATION
114
IMAGE CONTENT TRANSLATED INTO COMPRESSED BITMAP FORMAT
116
VECTORIZED CONTENT AND COMPRESSED BITMAPS ARE STREAMED FROM PROXY SERVER TO CLIENT
118
VECTORIZED CONTENT AND BITMAP CONTENT PROCESSED AND SCALED USING THIN CLIENT TO RENDER CONTENT ON CLIENT DEVICE
120

FIG. 2B

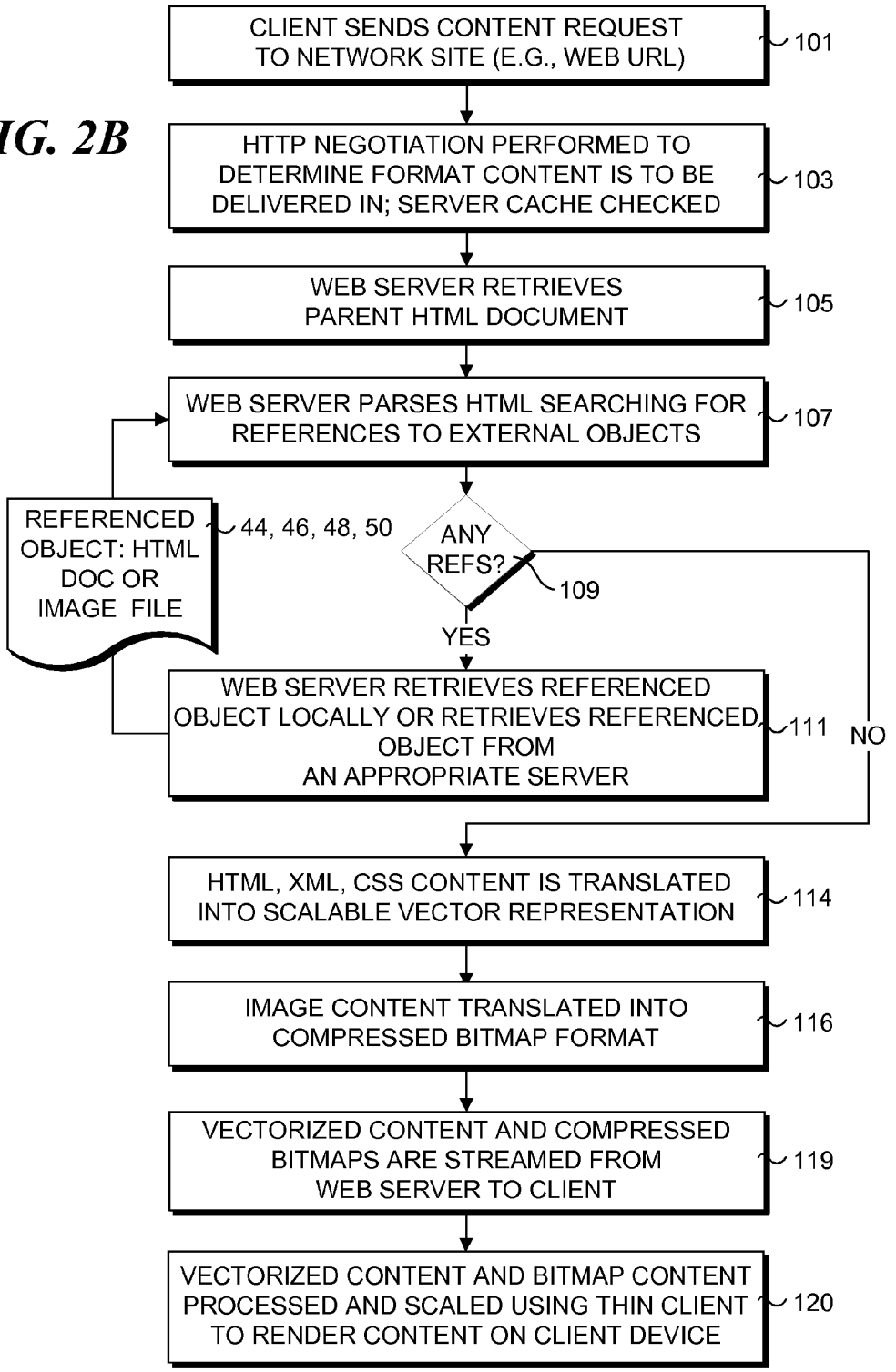
CLIENT SENDS CONTENT REQUEST TO NETWORK SITE (E.G., WEB URL)
101
HTTP NEGOTIATION PERFORMED TO DETERMINE FORMAT CONTENT IS TO BE DELIVERED IN; SERVER CACHE CHECKED
103
WEB SERVER RETRIEVES PARENT HTML DOCUMENT
105
WEB SERVER PARSES HTML SEARCHING FOR REFERENCES TO EXTERNAL OBJECTS
107
REFERENCED OBJECT: HTML DOC OR IMAGE FILE
44, 46, 48, 50
ANY REFS?
109
YES
NO
WEB SERVER RETRIEVES REFERENCED OBJECT LOCALLY OR RETRIEVES REFERENCED OBJECT FROM AN APPROPRIATE SERVER
111
HTML, XML, CSS CONTENT IS TRANSLATED INTO SCALABLE VECTOR REPRESENTATION
114
IMAGE CONTENT TRANSLATED INTO COMPRESSED BITMAP FORMAT
116
VECTORIZED CONTENT AND COMPRESSED BITMAPS ARE STREAMED FROM WEB SERVER TO CLIENT
119
VECTORIZED CONTENT AND BITMAP CONTENT PROCESSED AND SCALED USING THIN CLIENT TO RENDER CONTENT ON CLIENT DEVICE
120

FIG. 2C

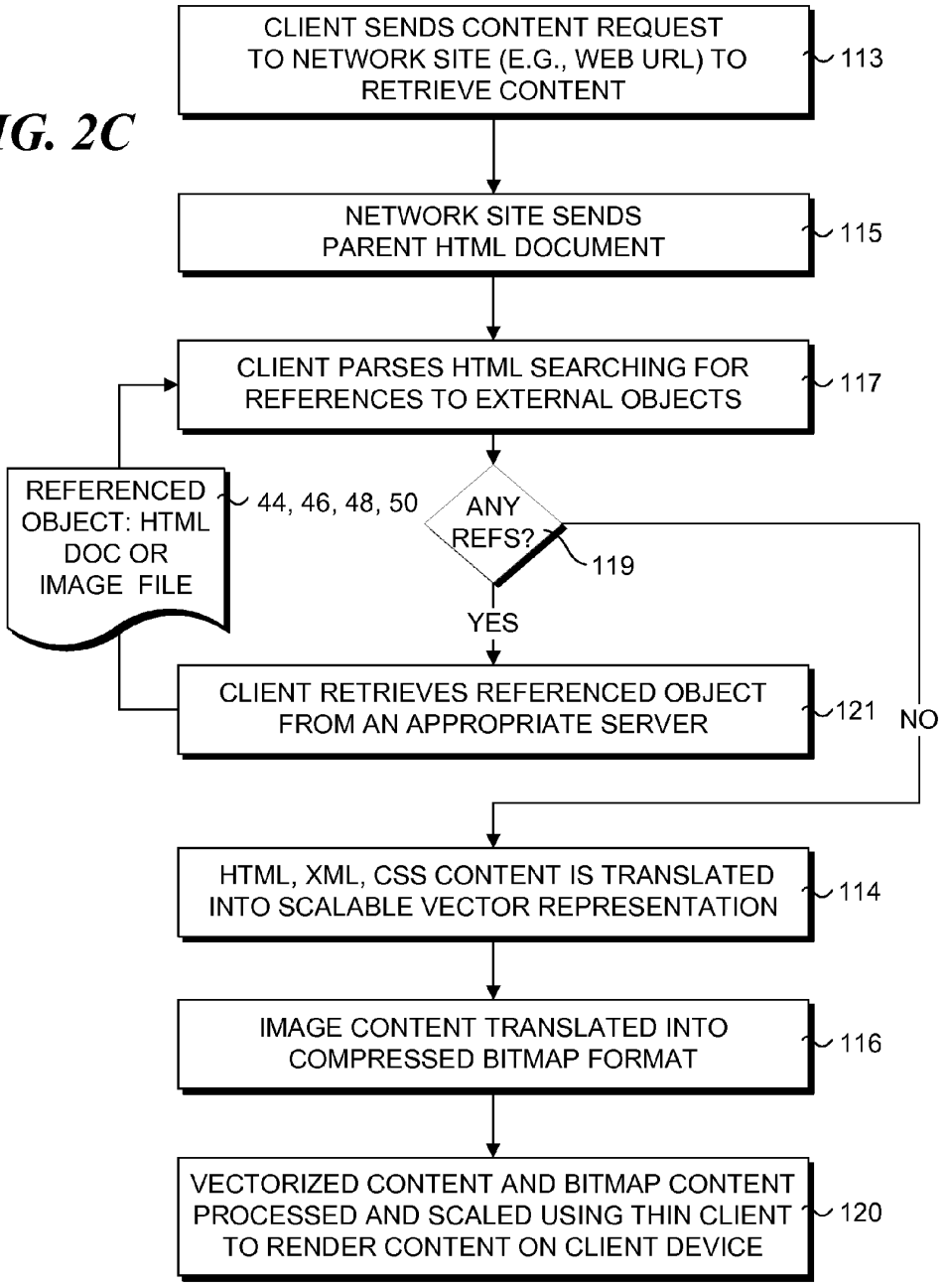
CLIENT SENDS CONTENT REQUEST TO NETWORK SITE (E.G., WEB URL) TO RETRIEVE CONTENT
113
NETWORK SITE SENDS PARENT HTML DOCUMENT
115
CLIENT PARSES HTML SEARCHING FOR REFERENCES TO EXTERNAL OBJECTS
117
REFERENCED OBJECT: HTML DOC OR IMAGE FILE
44, 46, 48, 50
ANY REFS?
119
YES
NO
CLIENT RETRIEVES REFERENCED OBJECT FROM AN APPROPRIATE SERVER
121
HTML, XML, CSS CONTENT IS TRANSLATED INTO SCALABLE VECTOR REPRESENTATION
114
IMAGE CONTENT TRANSLATED INTO COMPRESSED BITMAP FORMAT
116
VECTORIZED CONTENT AND BITMAP CONTENT PROCESSED AND SCALED USING THIN CLIENT TO RENDER CONTENT ON CLIENT DEVICE
120

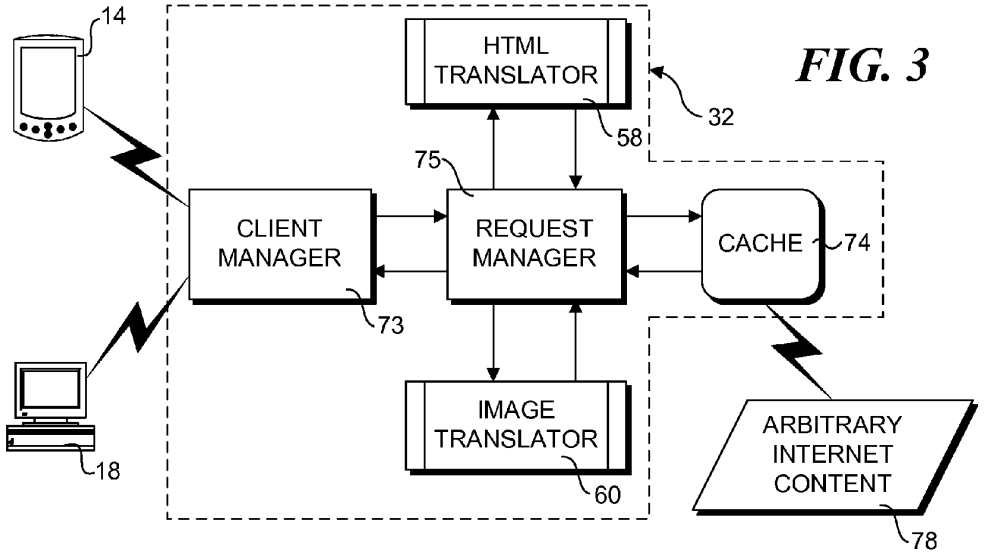
14
HTML TRANSLATOR
32
58
75
CLIENT MANAGER
REQUEST MANAGER
CACHE
74
73
IMAGE TRANSLATOR
ARBITRARY INTERNET CONTENT
18
60
78

FIG. 3

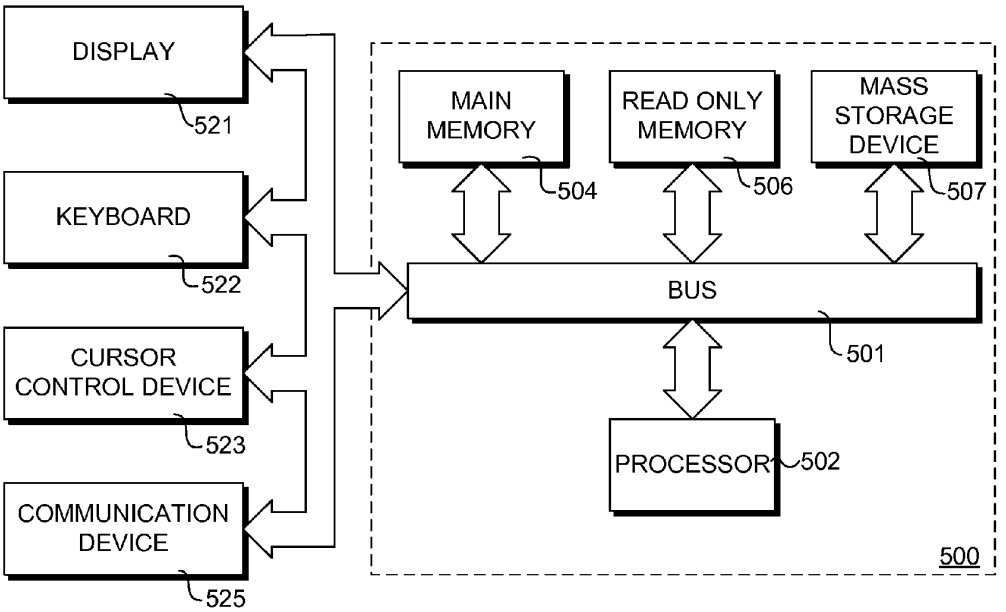
DISPLAY
521
KEYBOARD
522
CURSOR CONTROL DEVICE
523
COMMUNICATION DEVICE
525
MAIN MEMORY
504
READ ONLY MEMORY
506
MASS STORAGE DEVICE
507
BUS
501
PROCESSOR
502
500

FIG. 10

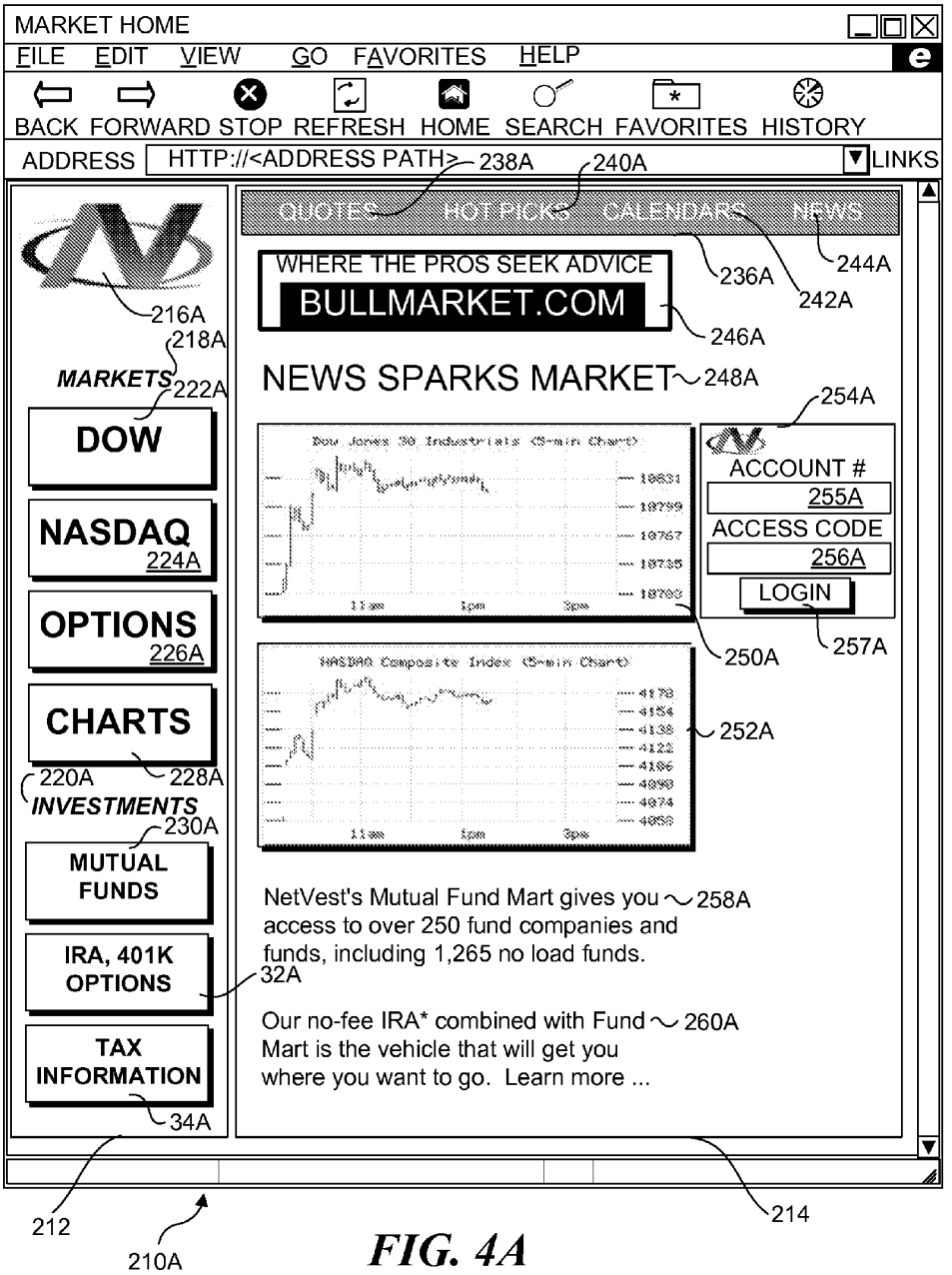
MARKET HOME
FILE EDIT VIEW GO FAVORITES HELP
BACK FORWARD STOP REFRESH HOME SEARCH FAVORITES HISTORY
ADDRESS HTTP://<ADDRESS PATH>
LINKS
238A
240A
QUOTES
HOT PICKS
CALENDARS
NEWS
236A
242A
244A
WHERE THE PROS SEEK ADVICE
BULLMARKET.COM
246A
216A
218A
MARKETS
222A
NEWS SPARKS MARKET
248A
254A
DOW
NASDAQ
224A
OPTIONS
226A
CHARTS
220A
228A
INVESTMENTS
230A
MUTUAL FUNDS
IRA, 401K OPTIONS
32A
TAX INFORMATION
34A
ACCOUNT #
255A
ACCESS CODE
256A
LOGIN
257A
250A
252A
NetVest's Mutual Fund Mart gives you access to over 250 fund companies and funds, including 1,265 no load funds.
258A
Our no-fee IRA* combined with Fund Mart is the vehicle that will get you where you want to go. Learn more ...
260A
212
210A
214

FIG. 4A

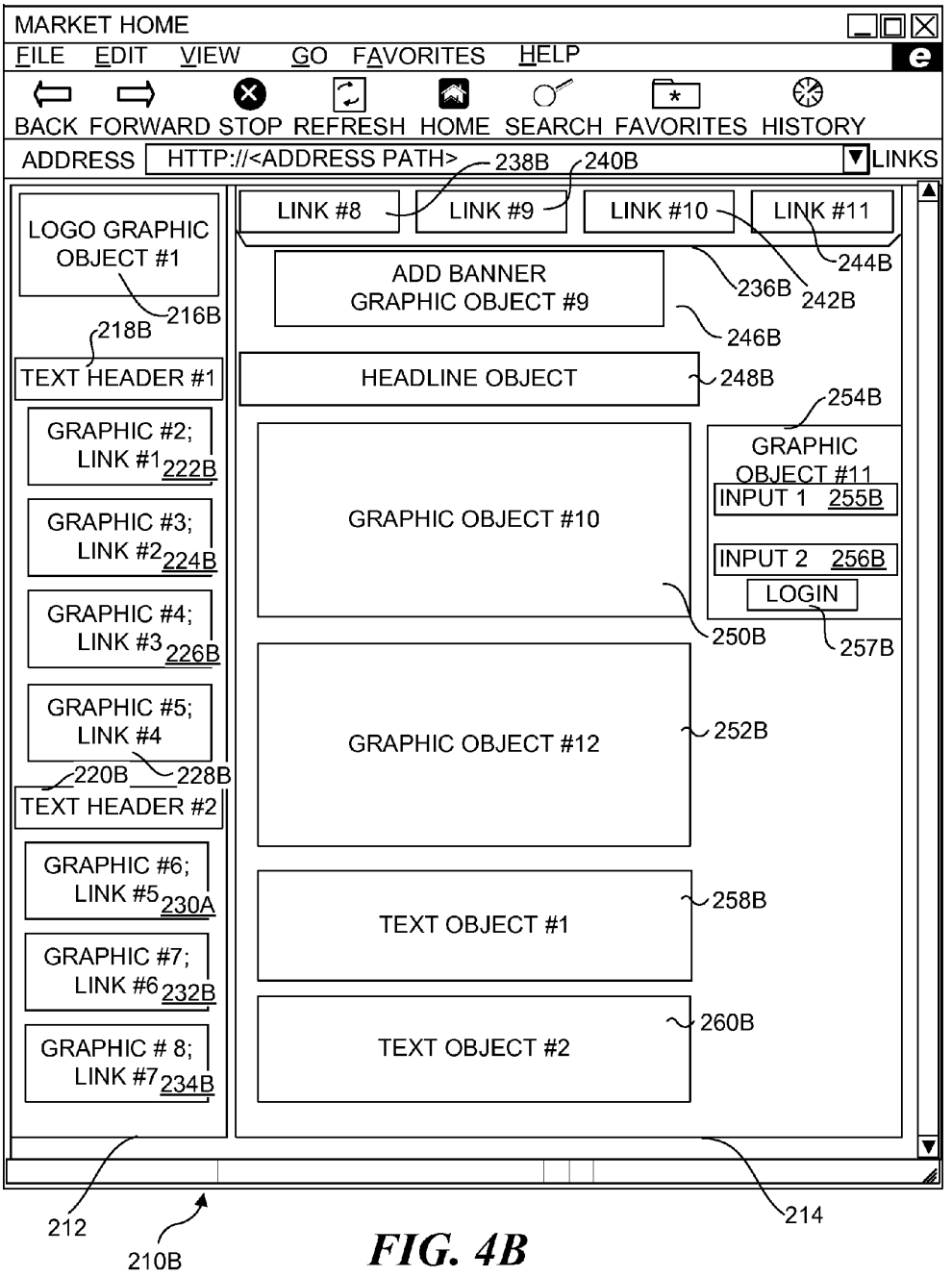
MARKET HOME
FILE EDIT VIEW GO FAVORITES HELP
BACK FORWARD STOP REFRESH HOME SEARCH FAVORITES HISTORY
ADDRESS HTTP://<ADDRESS PATH>
LINKS
LINK #8
LINK #9
LINK #10
LINK #11
238B
240B
244B
236B
242B
LOGO GRAPHIC OBJECT #1
216B
ADD BANNER GRAPHIC OBJECT #9
246B
218B
TEXT HEADER #1
HEADLINE OBJECT
248B
254B
GRAPHIC #2; LINK #1 222B
GRAPHIC OBJECT #11
INPUT 1 255B
GRAPHIC OBJECT #10
GRAPHIC #3; LINK #2 224B
INPUT 2 256B
LOGIN
GRAPHIC #4; LINK #3 226B
250B
257B
GRAPHIC #5; LINK #4
GRAPHIC OBJECT #12
252B
220B
228B
TEXT HEADER #2
GRAPHIC #6; LINK #5 230A
258B
TEXT OBJECT #1
GRAPHIC #7; LINK #6 232B
260B
TEXT OBJECT #2
GRAPHIC # 8; LINK #7 234B
212
210B
214

FIG. 4B

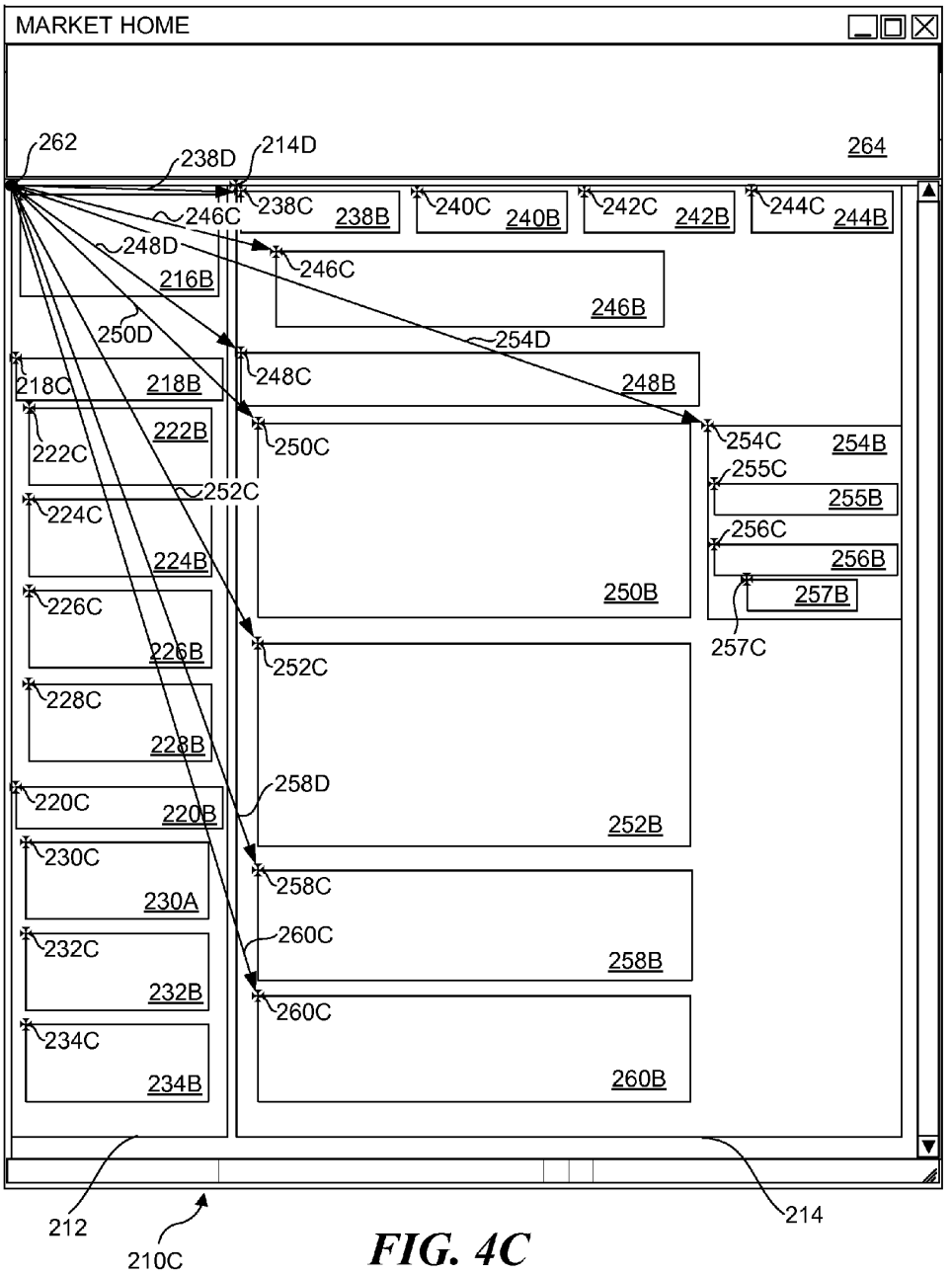
MARKET HOME
262
238D
214D
264
238C
238B
240C
240B
242C
242B
244C
244B
246C
248D
216B
246C
246B
250D
254D
218C
218B
248C
248B
222B
222C
250C
254C
254B
255C
252C
255B
224C
256C
224B
256B
250B
257B
226C
226B
257C
252C
228C
228B
258D
220C
220B
252B
230C
230A
258C
260C
232C
258B
232B
260C
234C
234B
260B
212
210C
214

FIG. 4C

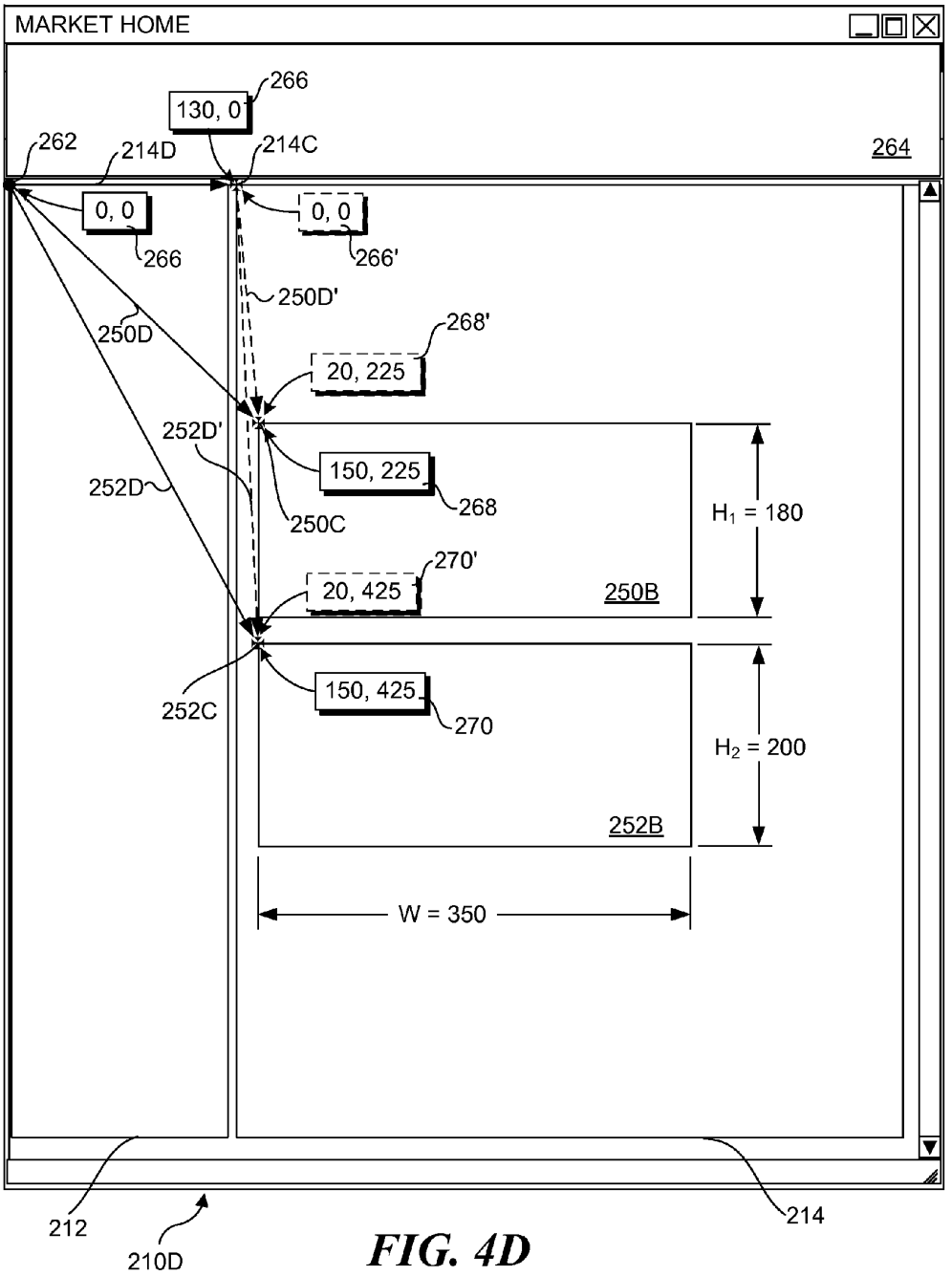
MARKET HOME
130, 0
266
262
214D
214C
264
0, 0
266
0, 0
266'
250D'
250D
268'
20, 225
252D'
150, 225
252D
268
250C
H1 = 180
270'
20, 425
250B
252C
150, 425
270
H2 = 200
252B
W = 350
212
210D
214

FIG. 4D

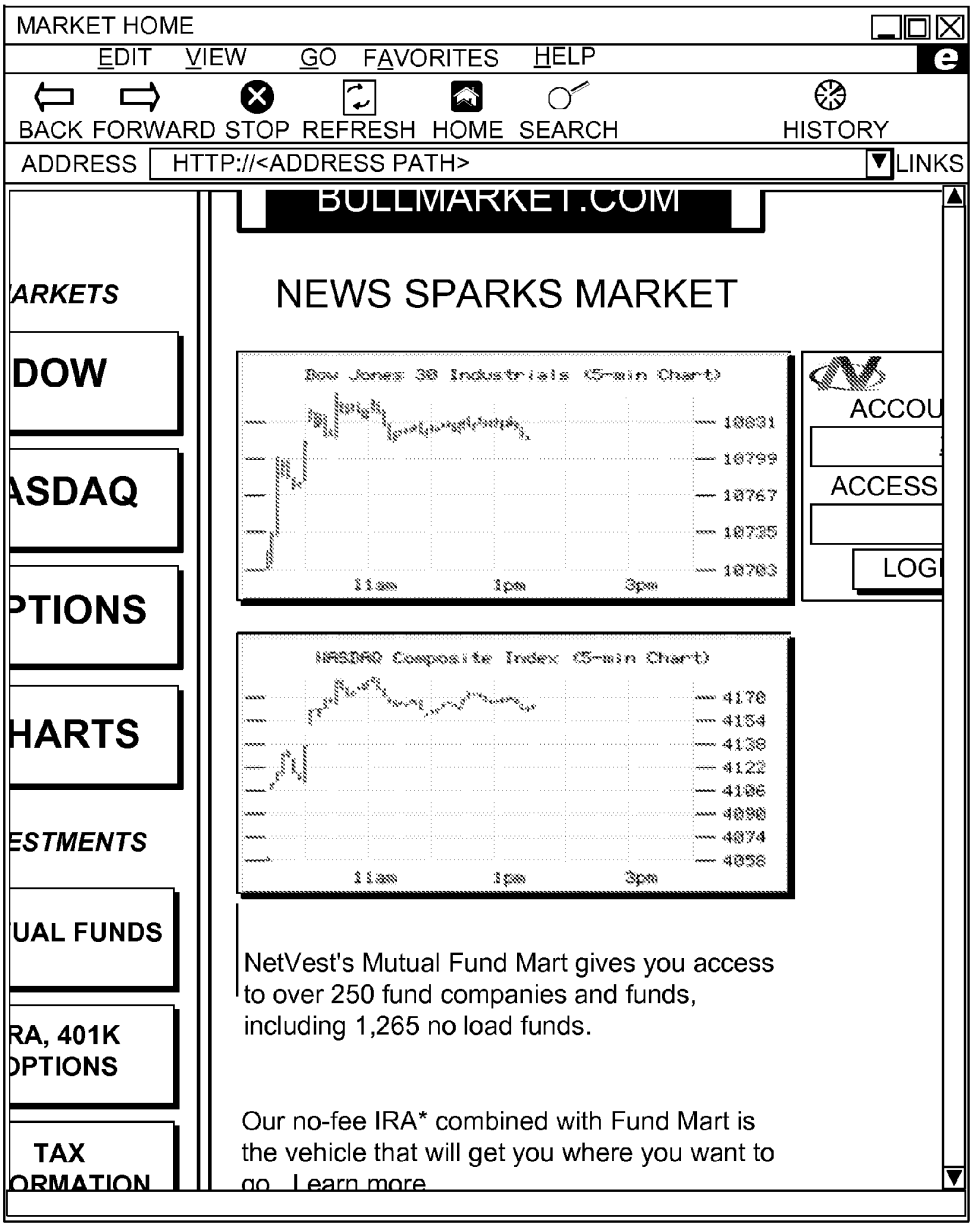
MARKET HOME
EDIT VIEW GO FAVORITES HELP
BACK FORWARD STOP REFRESH HOME SEARCH HISTORY
ADDRESS HTTP://<ADDRESS PATH>
LINKS
BULLMARKET.COM
ARKETS
DOW
ASDAQ
PTIONS
HARTS
ESTMENTS
UAL FUNDS
RA, 401K
PTIONS
TAX
ORMATION
NEWS SPARKS MARKET
Dow Jones 30 Industrials (5-min Chart)
10831
10799
10767
10735
10703
11am
1pm
3pm
NASDAQ Composite Index (5-min Chart)
4170
4154
4138
4122
4106
4090
4074
4058
11am
1pm
3pm
ACCOU
ACCESS
LOG
NetVest's Mutual Fund Mart gives you access to over 250 fund companies and funds, including 1,265 no load funds.
Our no-fee IRA* combined with Fund Mart is the vehicle that will get you where you want to go. Learn more

210E

FIG. 4E

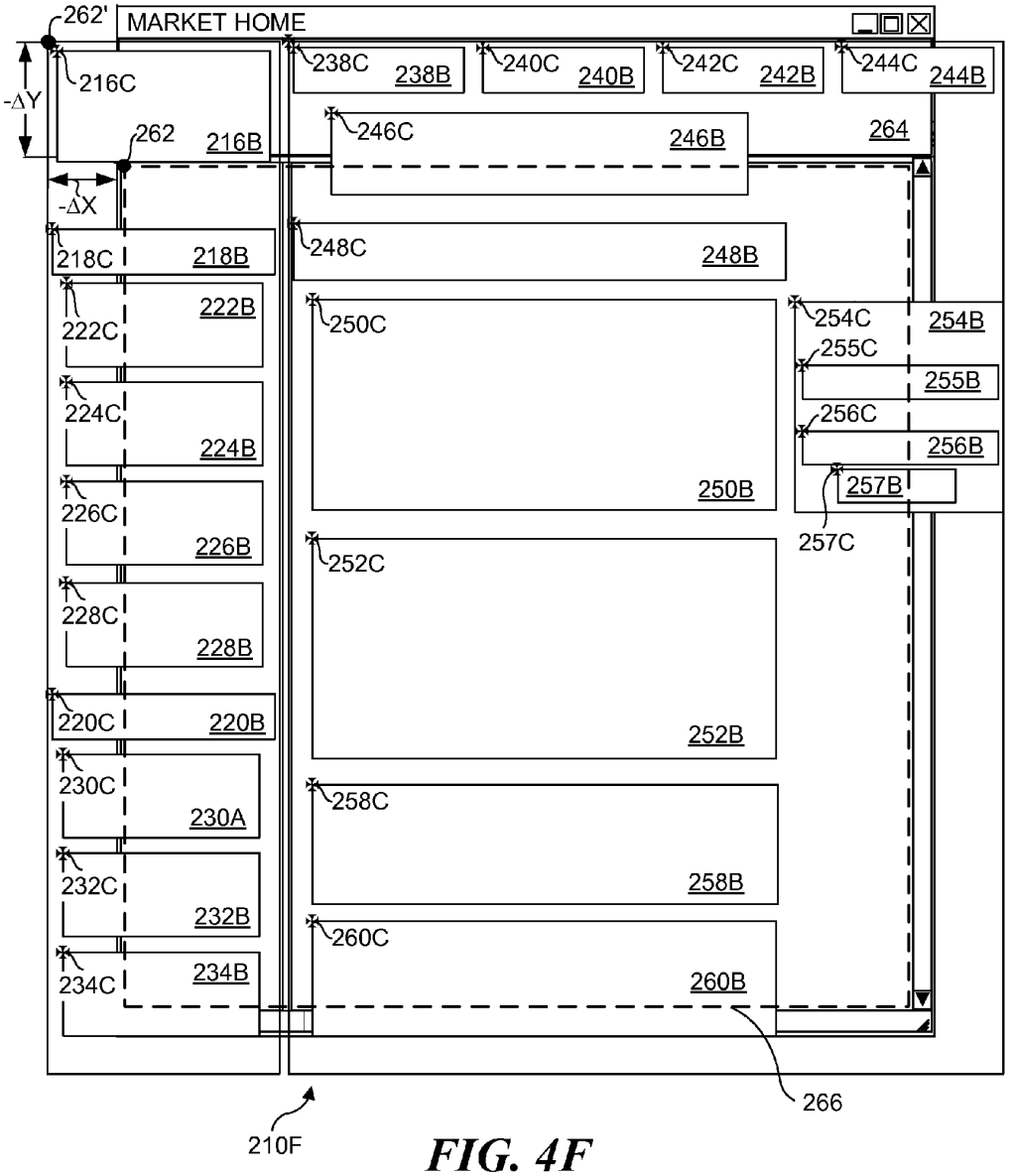
262'
MARKET HOME
-ΔY
216C
262
216B
-ΔX
238C
238B
240C
240B
242C
242B
244C
244B
246C
246B
264
218C
218B
248C
248B
222B
222C
250C
254C
254B
255C
255B
224C
224B
256C
256B
250B
257B
226C
226B
257C
252C
228C
228B
220C
220B
252B
230C
230A
258C
232C
232B
258B
260C
234C
234B
260B
266
210F

FIG. 4F

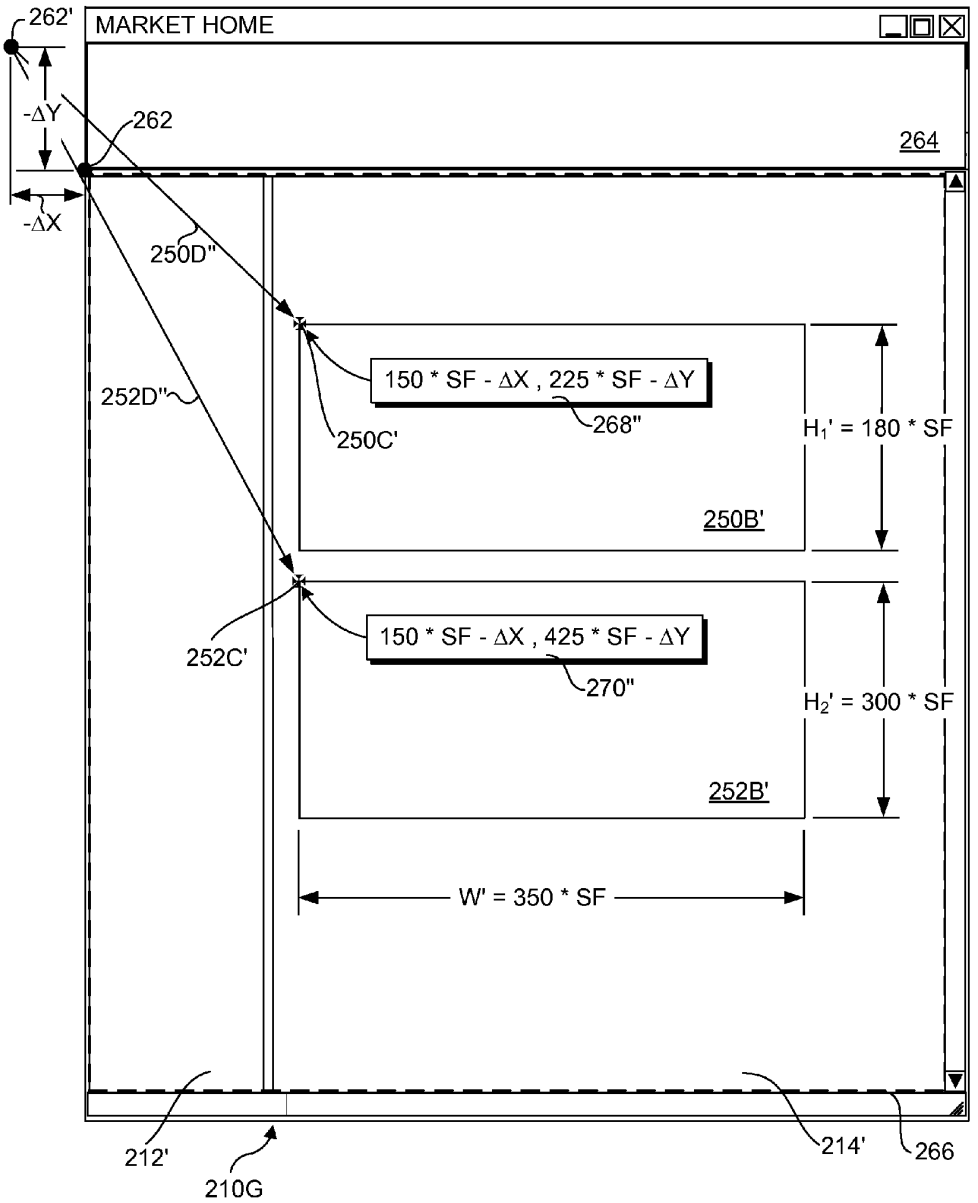
262'
MARKET HOME
-ΔY
262
264
-ΔX
250D"
150 * SF - ΔX , 225 * SF - ΔY
252D"
268"
250C'
H1' = 180 * SF
250B'
150 * SF - ΔX , 425 * SF - ΔY
252C'
270"
H2' = 300 * SF
252B'
W' = 350 * SF
212'
210G
214'
266

FIG. 4G

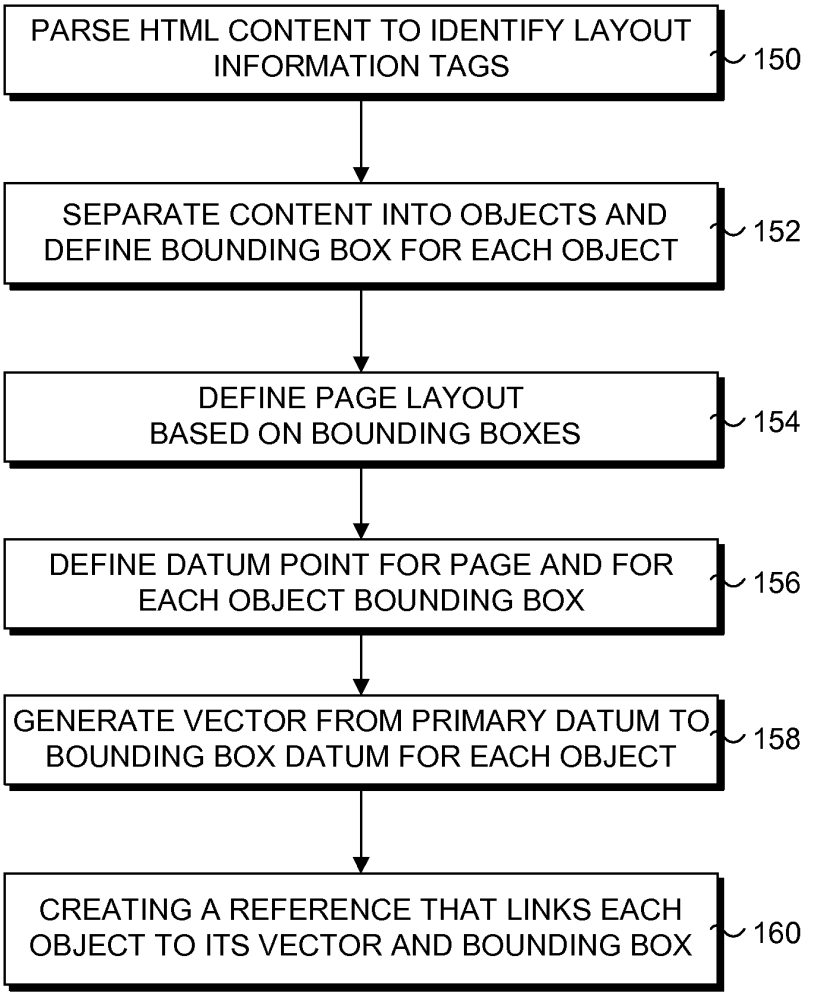
PARSE HTML CONTENT TO IDENTIFY LAYOUT INFORMATION TAGS
150
SEPARATE CONTENT INTO OBJECTS AND DEFINE BOUNDING BOX FOR EACH OBJECT
152
DEFINE PAGE LAYOUT BASED ON BOUNDING BOXES
154
DEFINE DATUM POINT FOR PAGE AND FOR EACH OBJECT BOUNDING BOX
156
GENERATE VECTOR FROM PRIMARY DATUM TO BOUNDING BOX DATUM FOR EACH OBJECT
158
CREATING A REFERENCE THAT LINKS EACH OBJECT TO ITS VECTOR AND BOUNDING BOX
160

FIG. 5

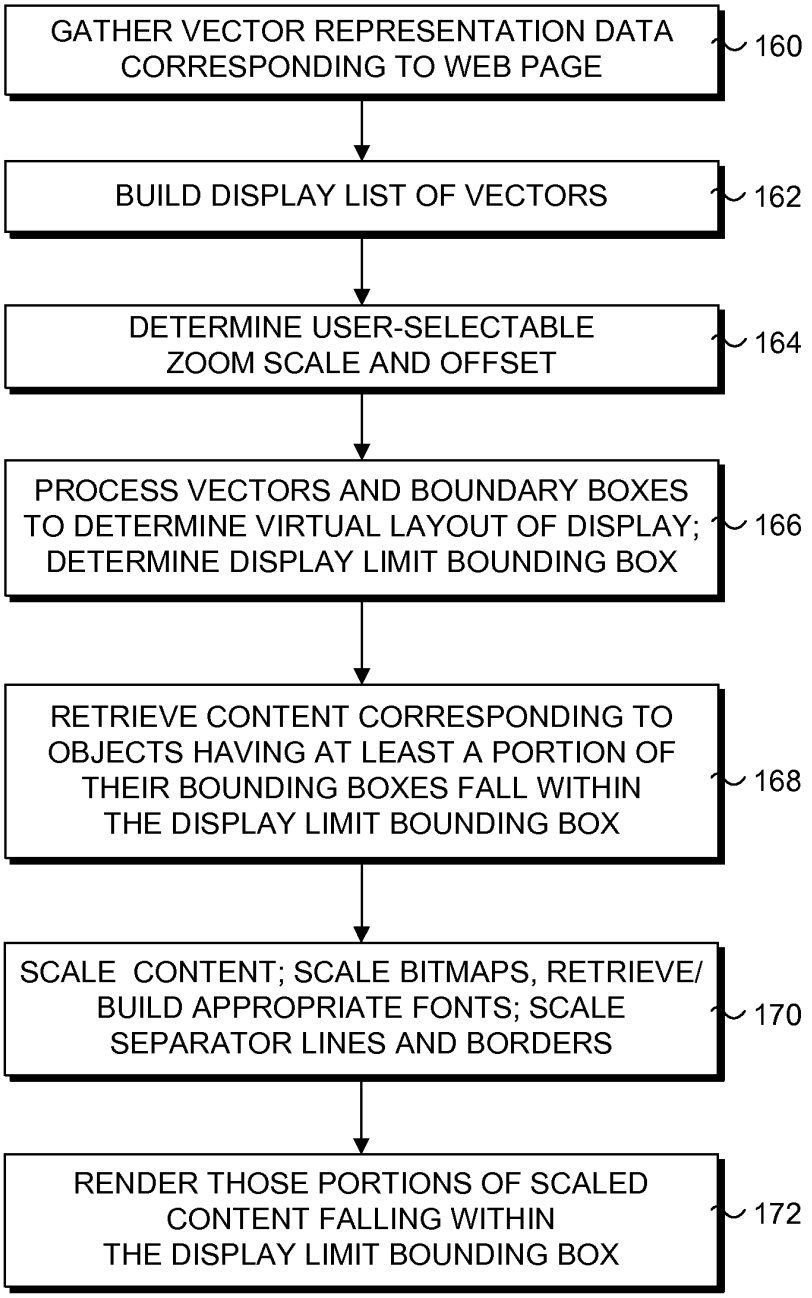
GATHER VECTOR REPRESENTATION DATA CORRESPONDING TO WEB PAGE
160
BUILD DISPLAY LIST OF VECTORS
162
DETERMINE USER-SELECTABLE ZOOM SCALE AND OFFSET
164
PROCESS VECTORS AND BOUNDARY BOXES TO DETERMINE VIRTUAL LAYOUT OF DISPLAY; DETERMINE DISPLAY LIMIT BOUNDING BOX
166
RETRIEVE CONTENT CORRESPONDING TO OBJECTS HAVING AT LEAST A PORTION OF THEIR BOUNDING BOXES FALL WITHIN THE DISPLAY LIMIT BOUNDING BOX
168
SCALE CONTENT; SCALE BITMAPS, RETRIEVE/ BUILD APPROPRIATE FONTS; SCALE SEPARATOR LINES AND BORDERS
170
RENDER THOSE PORTIONS OF SCALED CONTENT FALLING WITHIN THE DISPLAY LIMIT BOUNDING BOX
172

FIG. 6

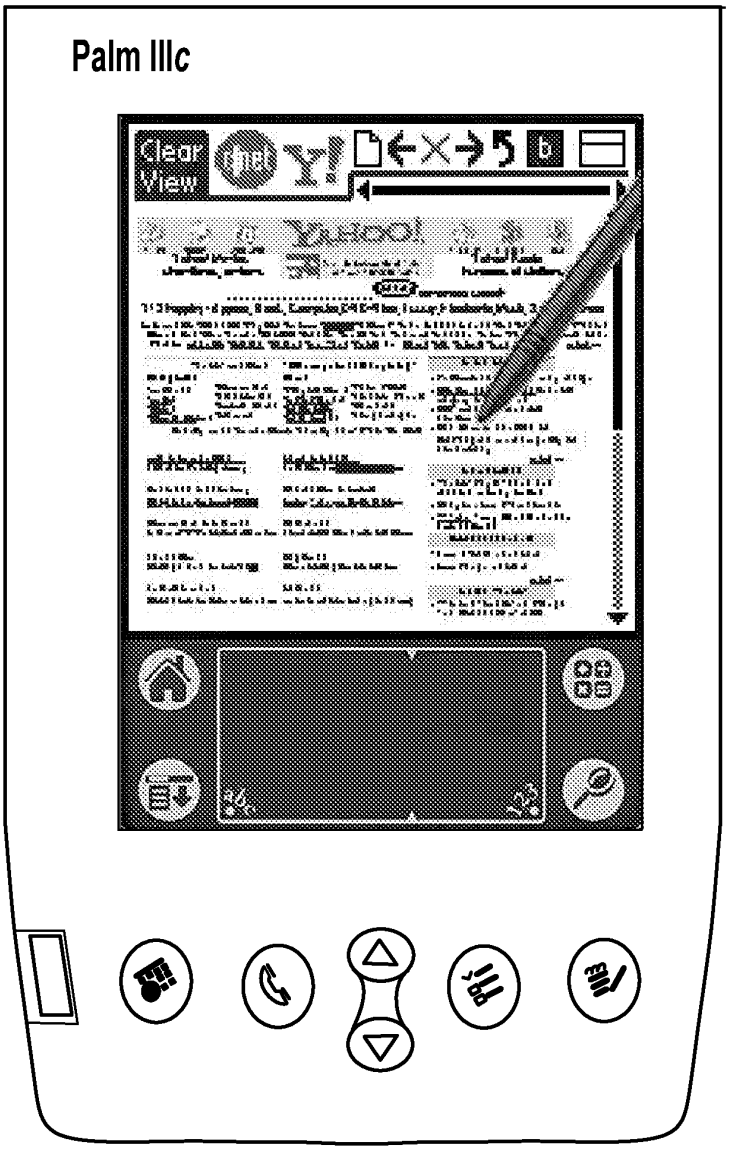

FIG. 7A

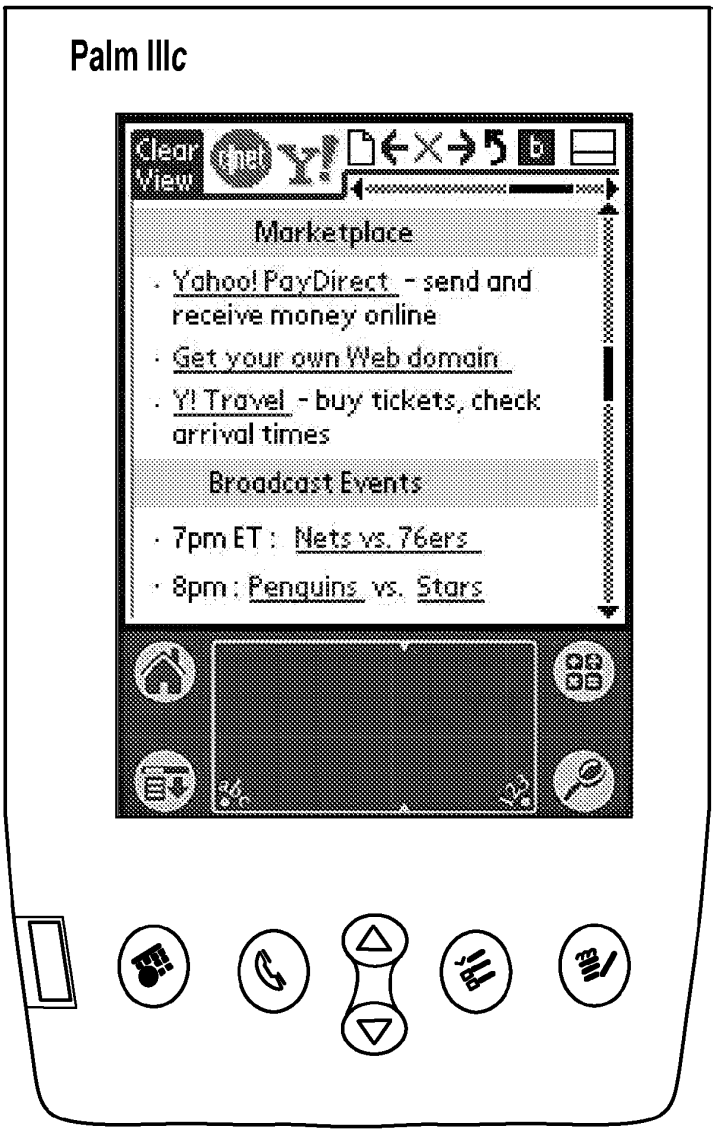
Palm IIIc
Clear View
Marketplace
Yahoo! PayDirect - send and receive money online
Get your own Web domain
Y! Travel - buy tickets, check arrival times
Broadcast Events
7pm ET : Nets vs. 76ers
8pm : Penguins vs. Stars

FIG. 7B

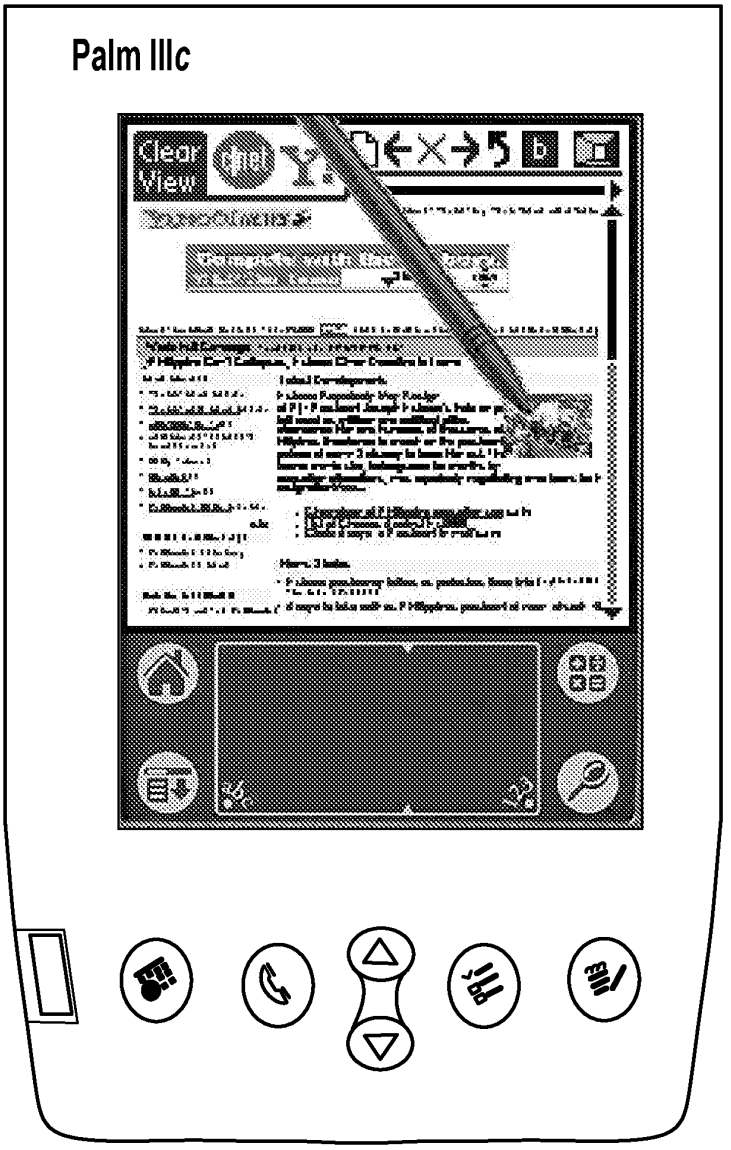

FIG. 8A

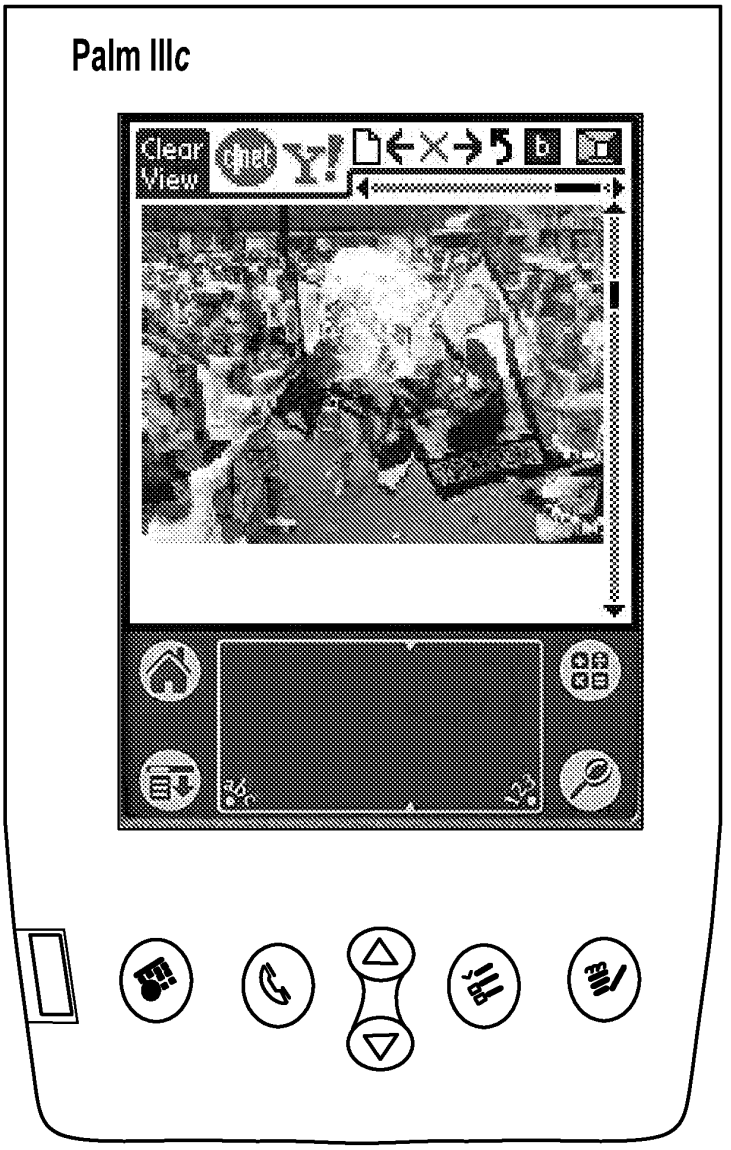

FIG. 8B

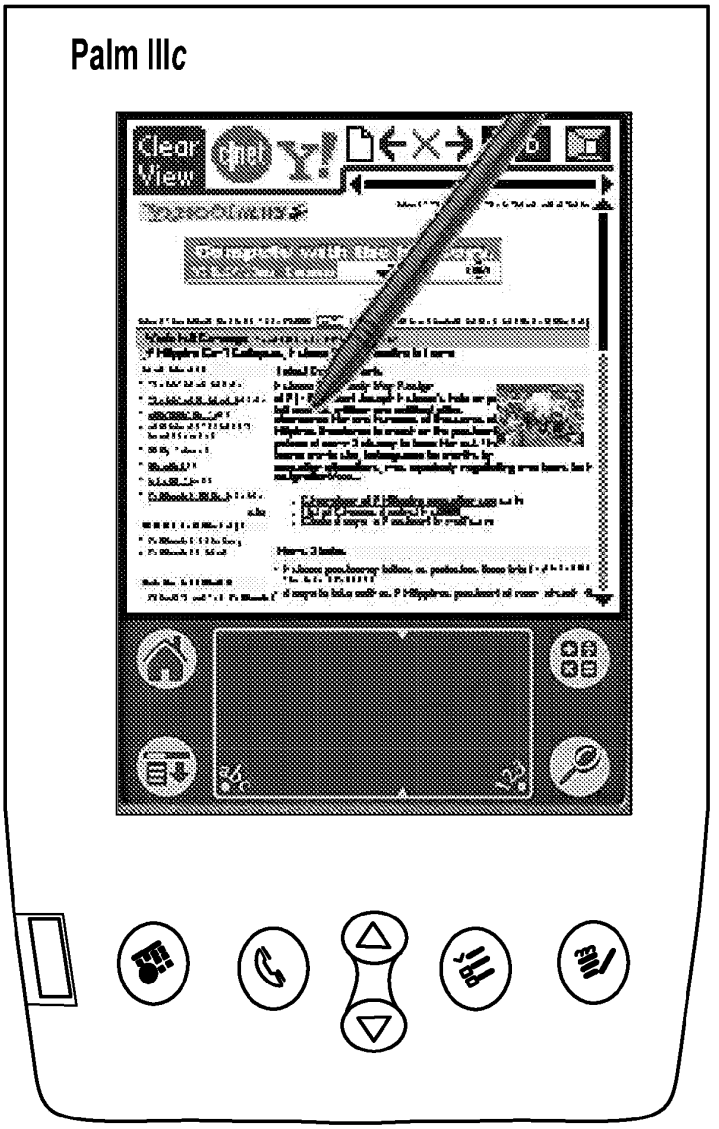

FIG. 9A

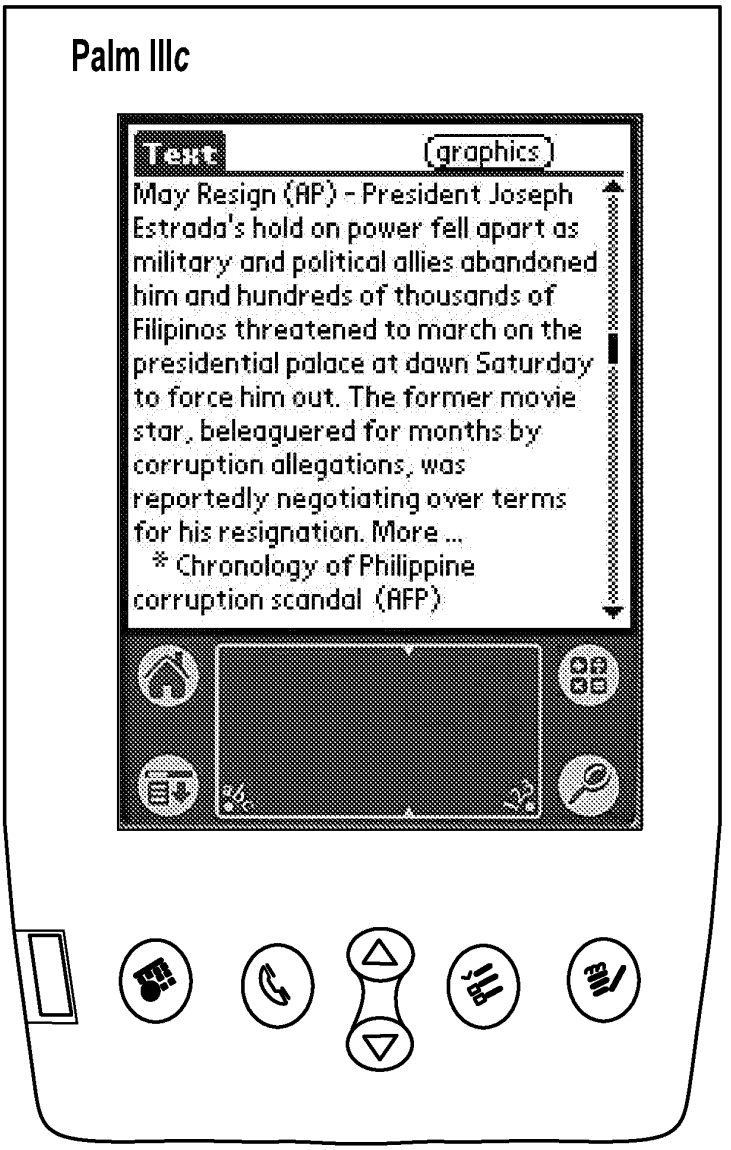
Palm IIIc
Text
(graphics)
May Resign (AP) - President Joseph Estrada's hold on power fell apart as military and political allies abandoned him and hundreds of thousands of Filipinos threatened to march on the presidential palace at dawn Saturday to force him out. The former movie star, beleaguered for months by corruption allegations, was reportedly negotiating over terms for his resignation. More ...
* Chronology of Philippine corruption scandal (AFP)

FIG. 9B

METHOD, APPARATUS, AND BROWSER TO SUPPORT FULL-PAGE WEB BROWSING ON HAND-HELD WIRELESS DEVICES

RELATED APPLICATIONS

This application is a Continuation of U.S. Non-provisional Application No. 09/878,097, filed Jun. 8, 2001, (issued as U.S. Pat. No. 7,210,099) entitled "RESOLUTION INDEPENDENT VECTOR DISPLAY OF INTERNET CONTENT," which is a Continuation-in-Part of U.S. Non-provisional Application No. 09/828,511, filed Apr. 7, 2001, (Abandoned) entitled "RESOLUTION INDEPENDENT VECTOR DISPLAY OF INTERNET CONTENT," the benefit of the filing dates of which is claimed under 35 U.S.C. §120. U.S. Non-provisional Application No. 09/878,097 further claims the benefit of the filing dates of U.S. Provisional Application No. 60/211,019, filed Jun. 12, 2000, entitled "METHOD AND SYSTEM FOR RESOLUTION INDEPENDENT DISPLAY OF HTML AND XML CONTENT" and U.S. Provisional Application No. 60/217,345, filed Jul. 11, 2000, entitled "METHOD AND SYSTEM FOR SELECTION, RETRIEVAL, AND CONVERSION OF COMPUTER CONTENT TO VECTOR FORMAT FOR RESOLUTION INDEPENDENT DISPLAY," under 35 U.S.C. §119(e). The disclosure of each of the foregoing applications is incorporated by reference in its entirety herein for all purposes.

This application also contains subject matter related to Divisionals (of 09/878,097) U.S. Non-provisional Application Nos. 11/045,649 (issued as U.S. Pat. No. 7,584,423) entitled METHOD, PROXY AND SYSTEM TO SUPPORT FULL-PAGE WEB BROWSING ON HAND-HELD DEVICES, and Ser. No. 11/045,757 (issued as U.S. Pat. No. 7,461,353) entitled SCALABLE DISPLAY OF INTERNET CONTENT ON MOBILE DEVICES, both filed Jan. 28, 2005. This application also contains subject matter related to U.S. Non-provisional Application Nos. 11/735,482 filed on Apr. 15, 2007, Ser. No. 11/738,486 filed on Apr. 21, 2007, Ser. No. 11/738,932 filed on Apr. 23, 2007, Ser. No. 11/868,124 filed on Oct. 5, 2007, and Ser. No. 12/326,092 filed on Dec. 1, 2008.

COPYRIGHT NOTICE

Contained herein is material that is subject to copyright protection. The copyright owner has no objection to the facsimile reproduction of the patent disclosure by any person as it appears in the Patent and Trademark Office patent files or records, but otherwise reserves all rights to the copyright whatsoever.

BACKGROUND OF THE INVENTION

1. Field of the Invention

The invention relates generally to translation of Internet and World Wide Web content to scalable vector representation. More particularly, the invention relates to apparatus and methods for zoom enabling the display of content in an Internet information browser by retrieving and translating HyperText Markup Language (HTML), eXtensible Markup Language (XML), and other Internet content to vector representations of that content.

2. Description of the Related Art

Text only Internet information browsers began as a project at the CERN, European Organization for Nuclear Research, facility in Geneva Switzerland. From its inception the intent

was to provide a mesh or web of access to data with a common user interface. Browsers moved from the academic environment when NCSA, the National Center for Supercomputing Applications at the University of Illinois in Urbana-Champaign developed Mosaic, an Internet information browser and World Wide Web client.

Internet content is stored in multiple file formats. These formats include HTML (Hyper Text Markup Language) and XML (eXtended Markup Language) as well as graphic file format GIF (Graphics Interchange Format) and JPEG (Joint Photographic Experts Group). These four file formats constitute the majority of Internet content. Font size and resizing display area for content can alter the size of the display of Internet content in existing browsers. The majority of Internet content displays as a flat single resolution with no browser support for zoom.

Much of the Internet content has been designed for display on desktop computers with a single target resolution. Even though HTML has the ability to adapt to changes in screen resolution, major Internet content providers have chosen to create their Web pages using fixed resolution structures, such as tables. This gives them the ability to control the look and feel of their Web sites. This fixed resolution approach has evolved to the point that the fixed resolution layout of Web pages has become the most common method to brand or uniquely identify Web sites. While this fixed resolution approach is good for site branding and product differentiation it does present a daunting technical problem for display of Internet content (designed for desktop computers) on small screen, low resolution, or different aspect ratio devices, such as cell phones and hand held computers.

BRIEF SUMMARY OF THE INVENTION

Techniques for supporting resolution-independent vector display of Internet (Web) content to allow Web pages to be scaled (zoomed) and panned for better viewing and/or to fit any resolution or screen size. According to one aspect, novel client-side processing of Web content is provided that translates portions of Web content requested by a user from an original format to a scalable vector-based format. The scalable vector-based format enables the Web content to be rendered by the client such that the rendered display substantially retains an original page layout defined by the original format, while supporting scaling and panning of the Web content in real-time.

Other features of the present invention will be apparent from the accompanying drawings and from the detailed description that follows.

BRIEF DESCRIPTION OF THE DRAWINGS

The appended claims set forth the features of the invention with particularity. The invention, together with its advantages, may be best understood from the following detailed description taken in conjunction with the accompanying drawings of which:

FIG. **1**A is a block schematic diagram illustrating a first exemplary system infrastructure in accordance with the present invention in which content translation services are performed by a third-party proxy service that translates content requested from a client that is retrieved from one or more network resources into a scalable vector representation and delivers the translated content to the client;

FIG. **1**B is a block schematic diagram illustrating a second exemplary system infrastructure in which the translation of

content is performed at a content provider's web site and delivered directly to the requesting client;

FIG. **1**C is a block schematic diagram illustrating a third exemplary system infrastructure in which content received from one or more network sources is translated into a scalable vector representation at the client;

FIG. **2**A is a flowchart illustrating how data is retrieved, processed and transferred in accordance with the system infrastructure of FIG. **1**A;

FIG. **2**B is a flowchart illustrating how data is retrieved, processed and transferred in accordance with the system infrastructure of FIG. **1**B;

FIG. **2**C is a flowchart illustrating how data is retrieved, processed and transferred in accordance with the system infrastructure of FIG. **1**C;

FIG. **3** is a block schematic diagram illustrating an exemplary architecture corresponding to the proxy server of FIG. **1**A;

FIG. **4**A is a representation of an exemplary web page has displayed on a conventional browser;

FIG. **4**B is a schematic diagram illustrates various objects that are generated based on the HTML code of the web page of FIG. **4**A;

FIG. **4**C is a schematic diagram illustrating a set of vectors and bounding boxes corresponding to the objects generated in FIG. **4**B;

FIG. **4**D is a schematic diagram illustrating how various vectors and bounding boxes may be defined in accordance with the invention;

FIG. **4**E is a representation of the web page of FIG. **4**A after it has been offset and scaled in accordance with the invention;

FIG. **4**F is a schematic diagram illustrating new datum points and bounding boxes corresponding to the scaled and offset web page;

FIG. **4**G is a schematic diagram illustrating new vectors and bounding box parameters for a pair of objects in the scaled and offset web page;

FIG. **5** is a flowchart illustrating the logic used by the invention when translating content into a scalable vector representation of that content;

FIG. **6** is a flowchart illustrating client-side operations that are performed to create a rendered display page based on the translated content the client receives and user-input;

FIGS. **7**A and **7**B are representations of a nominal and a zoomed in column view of an exemplary web page as they might appear on a Palm device;

FIGS. **8**A and **8**B are representation of nominal and zoomed in view of an exemplary graphic image as they might appear on the Palm device;

FIGS. **9**A and **9**B are representations of a nominal and zoomed in view of a text portion of a web page as they might appear on the Palm device; and

FIG. **10** illustrates an exemplary computer system that may be used for implementing various aspects of embodiments of the invention.

DETAILED DESCRIPTION OF THE INVENTION

Apparatus and methods are described for creating resolution independent vector display of Internet content to allow it to be scaled (zoomed) larger and smaller for better viewing or to fit any resolution or screen size. In addition, infrastructure and methods are provided for delivering such content to clients.

In the following description, for the purposes of explanation, numerous specific details are set forth in order to provide a thorough understanding of the present invention. It will be apparent, however, to one skilled in the art that the present invention may be practiced without some of these specific details. In other instances, well-known structures and devices are shown in block diagram form.

The present invention includes various operations, which will be described below. The operations of the present invention may be performed by hardware components or may be embodied in machine-executable instructions, which may be used to cause a general-purpose or special-purpose processor or logic circuits programmed with the instructions to perform the operations. Alternatively, the operations may be performed by a combination of hardware and software.

The present invention may be provided as a computer program product that may include one or more machine-readable mediums having stored thereon instructions, which may be used to program a computer (or other electronic devices) to perform a process according to the present invention. The machine-readable medium may include, but is not limited to, floppy diskettes, optical disks, CD-ROMs, and magneto-optical disks, ROMs, RAMs, EPROMs, EEPROMs, magnetic or optical cards, flash memory, or other type of media/machine-readable medium suitable for storing electronic instructions. Moreover, the present invention may also be downloaded as a computer program product, wherein the program may be transferred from a remote computer (e.g., a server) to a requesting computer (e.g., a client) by way of data signals embodied in a carrier wave or other propagation medium via a communication link (e.g., a modem or network connection). Accordingly, herein, a carrier wave shall be regarded as comprising a machine-readable medium.

Client Overview

According to one embodiment, an ultra-thin client-side viewer provides the graphics, linking, caching, and function handling capabilities necessary for extending the web to almost any platform. It is designed as a lightweight browser (micro-browser) running directly on device operating systems. In alternative embodiments, the client-side viewer may be deployed as a standard browser plug-in, or Java applet for extending browser functionality. In one embodiment, the client-side viewer attains its small size and efficiency by taking advantage of the power of SVF (Simple Vector Format) to describe almost any current web content. SVF files can be handled with a tiny fraction of the client code required by normal web browsers because current browsers must interpret a large and growing number of file types and their idiosyncrasies. SVF was originally designed to handle a superset of the most commonly used file formats in the complex world of CAD. It can accommodate not only new graphical functions, but the storage and transfer of almost any foreseeable new functional capability. SVF has been under consideration by the W3C (World Wide Web Consortium) for adoption as a standard for vector content on the World Wide Web.

By working tightly with a server-side content translator, web content and functionality can be passed seamlessly to the end user platform without any degradation in the look or feel of the output. In addition, because the resulting file graphics are handled as vectors, the end user can control real time changes in the size of text and graphics as well as what portion of the file is viewable in the display. This "zoom and pan" capability, familiar to CAD and other vector content software users, adds dramatically to the usability of non-standard display sizes. For very small displays, real time zooming and panning allows the user to see graphics and text at sizes that make them easily readable, and then "back up" to view an entire page for context or pan in any direction for navigation. Because the client-side viewer manipulates vectors, there is no loss in quality as the display is zoomed. The graphics

rendering engine within the client is so efficient that file manipulation happens in a fraction of a second. There is no perceptible wait for the user as the file is resized, or the window is repositioned. Content created for one display resolution now can be sized, real time, for any other display without degradation. Besides making small displays eminently usable, this technology extends web content into some surprising new arenas. For example, it enables normal desktop displays to be effective for individuals with visual impairment, or for content designed for 640×480 standard PC monitors to be shown without degradation on web billboards now appearing in cities like Seattle and San Francisco.

With a client of such extraordinary power packed in a tiny footprint, end user device manufacturers can free up valuable memory space for pre-fetching, caching and pre-loading content, dramatically improving performance for use in low bandwidth and portable applications. In the example of a wireless handheld device where expensive flash memory must be used instead of more cost effective bulk storage technology, the difference between consuming 10's of megabytes of flash memory with a standard browser versus running the client-side viewer described herein is dramatic.

Those "saved" megabytes of memory are now available for impressive interfaces, caching of often used content, and pre-fetching of intelligently selected linked files or pre-loading of content for targeted applications. For example, in a mapping application, the map tiles surrounding the viewed map could be downloaded and stored while the user was working with the initial tile, enabling an experience remarkably free from the current frustrations of waiting for a new map to be transferred for even the smallest change in magnification or coverage. If the user knows ahead of time what city they will visit on a business trip, maps and additional travel information in great detail could also be pre-loaded using a high bandwidth connection at home or in the office before heading out to shop or conduct business in the city. Additionally, SVF is a more efficient way to store web content. Resulting content files are reduced in size by anywhere from 20 to 80 percent over their source. SVF is also very compressible. With target file size reduction in the range of 90%, SVF files can take up as little as 1/10th the space of the web files in current use. This means that pre-translated content can be moved up to 10 times the rate of current web pages, and as much as 10 times as many pages, maps, stock charts, etc. can be stored for instant retrieval on the hand held platform as can be handled with current web technology.

When used on content created natively in SVF, additional capability can be extended to the client-side viewer.

Graphing the performance of stocks over time is only one use of SVF's ability to handle streams of data. Handling the output from financial systems, transactional systems, ERP packages, and CRM systems becomes easier and more flexible. Of course, systems integrators don't have to use these powerful capabilities to start with. If the target system provides web interfaces, these can be viewed, as designed, with no additional software to write, and no changes to the design or layout of the interface.

Server Overview

Enabling the client-side viewer to be so small and powerful is the server-side content translator. The server-side content translator rapidly translates Web content to SVF, compresses and encrypts the SVF results if desired, and transfers the vector formatted results to the client-side viewer. Alternatively, SVF files can be cached or stored in a file system for fetching and transfer at a later time. Pre-translated or cached content transfers are significantly faster as no conversion overhead is incurred, and file sizes are reduced using the more efficient SVF. Combine that with standard compression algorithms selectable for use with the client-side viewer for additional performance improvements.

During the translation process, and in the process of serving cached, pre-translated, or native SVF content, output files are "streamed" to the client-side viewer. Although this does not decrease the total time for file transfer, it can significantly improve the effective system performance for the end user. Content can be selectively streamed, with text and links coming through first, followed by graphic images and other content, for example. Should the user be accessing a link, rather than having interest in the entire file served, links can be selected early in the transfer and the next file download started immediately. In addition to streaming, the server-side content converter may also layer the content by type. This means that text can be put in one layer, links in another, GIF images in another, Javascript in another and so on. Layers can be turned on or off depending upon client capabilities, making files for less capable clients, or for users interested in a reduced functionality, higher transfer performance mode to be handled automatically.

All operational modes may be controlled through an administrative interface or accessible through a straightforward API (Application Program Interface). Furthermore, the system works with existing firewalls and within standard security protocols. In more secure modes, the server-side content converter and the client-side viewer may operate using Public/Private key authentication and encryption.

Exemplary System Infrastructures

In the following paragraphs, a description of three exemplary system infrastructures is provided. Schematic illustrations of these system infrastructures are shown in FIGS. **1**A, **1**B, and IC. It is noted that like-numbered components in these Figures perform substantially the same function. Therefore, any discussion of the functions of a component with reference to one or more of the infrastructures generally may apply to the other infrastructures as well, unless specifically noted otherwise.

A first of exemplary system infrastructure **10**A for implementing the invention is shown in FIG. **1**A. Infrastructure **10**A enables various clients, including wireless devices such as a cellular phone **12**, a wireless-enabled PDA **14**, and a wireless-enabled laptop computer **16**, as well as landline computers **18**, **20**, and **22**, to request content that is accessible via a network such as the Internet **24** to be retrieved from selected network resources, including web servers **26** and **28** and an FTP site **30**, wherein the content is translated into a scalable vector representation (e.g., SVF, also referred to herein as "vectorized content") through use of a proxy server **32** and sent to the requesting client. Upon being received by the client, the vectorized content is processed and rendered using a thin client to enable a user to view the content on the client device.

With reference to the flowchart of FIG. **2**A, the foregoing process is initiated by a client in a block **100**, wherein the client submits a request to proxy server **32** to retrieve and convert selected content. As depicted by a transfer path **34**, this comprises sending data **36**, which includes content network location indicia from which the content can be retrieved and proxy server network location information by which the content request may be delivered to over Internet **24** to proxy server **32**. Typically, it will be desired to retrieve a particular web page. Accordingly, the content network location indicia will comprise a URL (uniform resource locator) for the web page. Similarly, the proxy server network location information may also comprise a URL corresponding to a network access point for the proxy server. Optionally, the location

information may comprise a network IP address for one or both of the content location and the proxy server location. If the content is to be retrieved from an Internet resource, the request will typically be sent using the HyperText Transfer Protocol (HTTP) over the TCP/IP transport.

Next, in a block **102**, the request is received by the proxy server and the proxy server checks its cache to see if it already has the request content in its cache. If it does, it sends this cached content back to the client. If it does not have the requested content cached, the proxy server sends out a request to retrieve the content from the network resource. For illustrative purposes, it will be assumed for the present example that the desired content comprises a web page that is stored on web server **26**. Typically, when the requested content comprises a web page, the content may be retrieved using conventional web content retrieval techniques, such as that employed by various modern browser clients, including Netscape Navigator and Internet Explorer. This generally comprises providing routing information, such as the URL for the web page (URL **38**) to routing services provided by Internet **24**, which routes the request to an appropriate network resource (e.g., web server **26**), as depicted by a transfer path **40**.

Typically, the URL will correspond to a web page whose content is stored by the web server in an HTML (HyperText Markup Language) document comprising HTML code and embedded text content, in addition to other optional content languages, that may contain references to other objects (e.g., HTML documents and graphic image files) stored locally to the server or stored on a remote server. For example, the HTML content corresponding to a single-frame web page is often stored in a single file, while multiple-frame web pages may comprise content that is stored in a single file or in multiple files. These files may be stored locally on the web server (e.g., on one of the server's hard disks), or on a local storage device connected to the web server via a local area network (LAN), such as a network attached storage (NAS) filer. Optionally, some of the web page's content may comprise one or more documents that are stored at remote locations that may be accessed via a WAN (wide area network) or the Internet.

HTML is a standardized language that describes the layout of content on a web page, and attributes of that content. This layout and attribute information is defined by sets of tags contained in HTML code corresponding to the page. The tags define various HTML layout and display information, including tables, paragraph boundaries, graphic image positions and bounding box sizes, typeface styles, sizes, and colors, borders, and other presentation attributes. A portion or all of a web page's text content may be contained in the parent HTML document corresponding to the URL. In addition to basic HTML, web page documents may contain XML (eXtensable markup language) code, as well as scripting language code, such as javascript. However, for simplicity, any documents containing web page content other than only graphic content that are discussed herein will be referred to as HTML documents.

In addition to HTML and other markup and scripting language content, it is very common for web pages to include graphical content. In general, graphical content is usually stored in an image file or files that are external from the parent HTML document for the web page. For example, the parent HTML document may contain one or more embedded image tags that reference the location where those images are stored. As before, the graphic images may be stored locally, or may be stored on remote servers that are accessed by the web server via a WAN, or the Internet. These files will typically comprise data stored in one of several well-known graphic formats, including bitmap files (BMP), GIF (Graphics Interchange Format) files, and JPEG (Joint Photographic Experts Group) files.

In response to receiving the request for content, web server **26** begins sending a parent HTML document **42** back to proxy server **32** in a block **104**. In a block **106**, the HTML content of the parent HTML document is parsed to search for references to external objects such as HTML frames and graphics. In a decision block **108**, a determination is made to whether any references are found. For each reference to an external object that is found, proxy server **32** requests to have the object retrieved from an appropriate network resource (e.g., a web server) in a block **110**, and data corresponding to the object is transmitted back to the proxy server, as depicted by locally accessible HTML documents **44** and graphic images **46**, as well as remotely accessible HTML documents **48** and graphic images **50**, which may be accessed via web server **28**. If the external object is a graphic image, there is no further processing of the object at this point. If the object is an HTML document, the functions provided by blocks **106** and **108** are repeated. Generally, this set of processing functions is repeated iteratively until all of the external objects are retrieved. However, as described below, there will be some instances in which certain objects will be retrieved at a later point in time. In addition to content stored on web servers that are accessed using HTTP, content may also be retrieved from various network sites using the File Transfer Protocol (FTP), such as FTP documents **51**, which are accessed via FTP server **30**.

In general, HTML documents and graphic files will be sent as packetized data streams using HTTP over one or more TCP/IP network connections, wherein the data streams will usually be asynchronous. Retrieval of HTML documents and graphic files corresponding to the embedded references will usually require additional transfer time. Furthermore, graphic content oftentimes comprises significantly larger file sizes than HTML content, leading to significant transfer times in some instances. For simplicity, the transfer of the various HTML documents and graphic files for the content request are depicted by HTML documents **52** and graphic documents **54**, which are transferred over a transfer path **56**.

When the HTML documents and graphic content are received by proxy server **32**, a scalable vector representation of the web page is generated in a block **114** by an HTML translator **58**. In brief, HTML translator **58** translates HTML, XML, and cascaded style sheet (CSS) layout content into a scalable vector representation, such as SVF. Details of the HTML translation process are contained below. In addition, the graphic images are converted into a compressed bitmap format in a block **116** by a graphics translator **60**. The vectorized content **62** and compressed bitmaps **64** are then streamed back to the client (i.e., computer **18**) in a block **118**, as depicted by a transfer path **66**. In one embodiment, the content portions are sent in separate streams using multiple connections. In another embodiment, the content portions are sent via a multiplexed stream using a single connection. As the vectorized content and compressed bitmap data are received by the client device, they are processed by a thin client **68** running on the client device, whereby a representation of the original web page content may be rendered on the client device's display screen at various user-selectable scaled resolutions and pan offsets in a block **120**, thereby enabling a user to more clearly see an overview or details in the web page. Further details of the client side processing are provided below.

As discussed above, wireless clients may also access the vectorized network (e.g., web site) content provided via proxy server **24**. The majority of this process is identical to that described above for land-line clients (e.g., computers **18**, **20**, and **22**), except for provisions required for sending data to and receiving data from wireless devices. In general, most wireless devices will access the Internet via a wireless service provider (i.e., a wireless telecommunications carrier) that is particular to that wireless device. Accordingly, a portion of the transmission path to and from proxy server **24** will comprise infrastructure provided by that service provider and/or shared with other service providers. For simplicity, this infrastructure is shown as a cellular tower **70** and a service provider data center **72**, although it will be understood by those skilled in the art that the connection path may comprise additional infrastructure components, including appropriate gateways and routers, that enable wireless devices to access proxy server **24**.

In some implementations, there will be no special formatting/protocol services that need to be performed by proxy service **24**—from the viewpoint of the proxy service, it will be immaterial whether the client is a land-based or wireless client; the special handling provisions for wireless devices will be handled entirely by the service providers infrastructure transparently at both ends of the communications path. In other instances, it may be desired or necessary to reformat the data content delivered to the wireless device at the proxy service. This will generally be dependent on the particular wireless protocol used, and what services are provided by the service provider for the wireless client.

Currently, in the United States, wireless clients generally access Internet **24** by using the Wireless Application Protocol (WAP). In Japan, the most popular access means is NTT DoCoMo's i-Mode wireless protocol. In addition to these wireless standards, new standards are anticipated to be in force in the near future, including NTT DoCoMo's FOMA (Freedom of Mobile Multimedia Access), which is transported over W-CDMA (Wideband Code Division Multiple Access), and CDMA-2000. For the purposes of the invention herein, it will be understood that those skilled in the mobile telecommunications arts will be knowledgeable about any particular format and/or transport protocol requirements that pertain to the particular protocol that is to be used.

A second exemplary system infrastructure **10**B for implementing the invention is shown in FIG. **1**B. As will be readily recognized, much of infrastructure **10**B is similar to infrastructure **10**A; however, rather than have a separate proxy server perform the proxy functions (retrieve and translate content), these functions are performed on machines operated by the web site in infrastructure **10**B.

The logic implemented by the invention when providing content to a client using infrastructure **10**B is illustrated in the flowchart of FIG. **2**B, wherein the process begins in a block **101** in which the client sends a content request **39** directly to the network site (e.g., web server **26**), as depicted by a transfer path **41**. In a block **103**, HTTP negotiations are performed to determine the format the content is to be delivered in. For example, the request may contain indicia identifying the type of content requested, such as an SVF MIME type (e.g., image/vnd.svf). This is to inform the web server that the request is for specially-formatted content rather than conventional content. The server first checks to see if it already has cached the requested content. If it has, it sends the content to the requesting client; otherwise, it retrieves the parent HTML document in a block **107**. It then performs processing steps in blocks **107**, **109**, and **111** to retrieve content referenced through embedded tags in a manner substantially similar to that discussed above with reference to respective blocks **106**, **108**, and **110**. The primary difference in this instance is that the web server does not receive requests from or send documents to a proxy server—rather, the content is retrieved and processed at the web server, wherein the retrieved content may be stored local to the web server or retrieved from a remote server in a manner similar to that described above.

As before, the retrieved HTML documents are translated into scalable vector representations by HTML translator **58** in a block **114**, while the graphic images are translated into a compressed bitmap format by image translator **60** in a block **116**, as depicted by vectorized content **62** and bitmap content **64**. The vectorized content and bitmap content are then streamed from the web server to the client in a block **119**, as depicted by a transfer path **67**. Upon arriving at the client, the vectorized content and bitmap content are processed, scaled, and rendered on the client in a block **120**.

A third exemplary system infrastructure **10**C for implementing the invention is shown in FIG. **1**C. In this configuration, the proxy functions are performed at the client. As shown by a block **113** in FIG. **2**C, the process for providing vectorized content to a client in accordance with infrastructure **10**C begins in a block **113**, in which the client sends a content request **37** to a network site, such as web server **26**, via Internet **24**. In response, the network site retrieves the parent HTML document and sends it to the requesting client in a block **115**. In a manner similar to that discussed above with reference to blocks **106**, **108**, and **110** of FIG. **1**A, the client first parses the parent HTML document searching for embedded references to external objects and retrieves these objects, whereupon the embedded reference search is performed on the newly retrieved document until all of the content corresponding to the original content request has been retrieved. This content is depicted by HTML documents **52** and image files **54**, which are sent from the network site to the client via a transfer path **69**. At this point, the client performs translations on the HTML content and the graphic image content that are substantially similar to that performed by the proxy server in FIG. **1**A or at the web site in FIG. **1**B, as provided by blocks **114** and **116**. The vectorized and image content is then processed and scaled by thin client **68** in a block **120**, as depicted by device output **71**.

Attention now is focused on the functionality provided by proxy server **24** in system infrastructure **10**A of FIG. **1**. Fundamentally, the proxy server functions as a proxy. It accepts requests for content from client devices as full URLs using standard HTTP mechanisms carried over a multiplexed TCP connection. Standard HTTP content negotiations features specify the formats in which content is to be delivered (SVF, bitmap, and possibly others, which can be handed off to cooperating client-side display software). As described in further details below, in some embodiments the proxy server appears for the client as a normal proxy (that is, the client knows it is retrieving content via the proxy), while in other embodiments the proxy is transparent to the client.

The proxy server responds to client content requests by delivering content in one of the requested formats, by retrieving the content in an appropriate format from its cache, or from an upstream content source (again using standard HTTP content negotiation features), or by translating upstream content from a supported original format to SVF or the client bitmap format.

Requests from the server installation to its cache and from the cache to upstream content sources are made in HTTP carried over TCP using simple straightforward Web content requests. For example, requests from clients to the proxy server comprise HTTP proxy requests (e.g., "GET http://

www/xyz.com/some_page.html HTTP/1.0 . . . ") carried over TCP or over a lightweight multiplexing protocol over TCP. The multiplexing protocol allows the server to push image thumbnails to the client before the SVF stream is available, as well as offering a channel for control and status information, more simultaneous channels than the client operating system may support, and a mechanism for prioritizing information flow from server to client under loose client control. In addition to HTTP requests, the proxy server architecture supports other user-level protocols, such as FTP and Gopher.

Details of some of the primary components of the proxy server architecture are shown in FIG. **3**. Internally, the proxy server comprises a suite of coordinated processes connecting to upstream content through an HTTP cache **74**. In one embodiment all functions except caching are performed in a single process, wherein multiple threads are used to effect asynchronous I/O. Separate processes communicated via persistent multiplexed connections carried over the most efficient reliable transport available (e.g., Unix sockets over single processor and symmetric multiprocessor (SMP) computers; TCP sockets between separate computers). All processes are capable of servicing multiple requests simultaneously. No process maintains client state outside the context of a single request, so all components can be repeated and load balanced across multiple CPU's of an SMP computer or across separate computers on a LAN.

The various content translators used by the proxy server accept (via HTTP PUT) or request (driven by HTTP proxy GET/POST) content in supported, but client-unsupported, formats; and return (via HTTP PUT or GET/POST response) one or more representations of that content in a client-supported format. In the embodiments illustrated in FIG. **1**A-C, two translators are used: HTML translator **58** and image translator **60**. Future content types may be accommodated by new translators, by extending existing translators to cover the new content types, or by extending the client's capabilities. Standard HTTP content negotiation mechanisms are used to inform the proxy server of the client's capabilities and expectations on each request.

Managers at the proxy server coordinate the operations of other components. Two managers are presently defined; a client manager **73** that handles client proxy requests, and a request manager **75** that handles unproxied HTTP requests from other services. The managers accept requests, attempt to service them from HTTP cache **74**, and drive HTML translator **58** and image translator **60** when content does not match the clients' requirements. Managers also handle translator requests for inline content (e.g., image dimensions for page layout), and push translated content into HTTP cache **74**. Additionally, the client manager coordinates delivery of primary and inline content, and provides process and status information to the clients.

As discussed above, HTML translator **58** creates a scalable vector representation of the original HTML content of a requested web page. In order to better explain how translation of HTML content is performed, one embodiment of a translation process is described below as applied to an exemplary web page. In addition, details of conventional web page client and server-side processing are provided so as to clarify how web content is laid out during a pre-rendering process on the client.

FIG. **4** shows a representation of a web page **210** served from an exemplary stock brokerage Internet web site as it would appear when rendered on a modern Internet browser, such as Microsoft's Internet Explorer or Netscape's Navigator. Web page **210** is exemplary of many web pages that implement frames, and includes two adjacent frames **212** and **214**. A logo graphic object **216**A is displayed at the top of frame **212**, which additionally includes a "MARKETS" text header **218**A, an "INVESTMENTS" text header **220**A, and a plurality of links with overlaying graphic objects, including a "DOW" link **222**A, a "NASDAQ" link **224**A, an "OPTIONS" link **226**A, a "CHARTS" link **228**A, a "MUTUAL FUNDS" link **230**A, a "IRA, 401K OPTIONS" link **232**A, and a "TAX INFORMATION" link **234**.

A horizontal group of links **236** is disposed at the top of frame **214**, and includes a "QUOTES" link **238**A, a "HOT PICKS" link **240**A, a "CALENDARS" link **242**A, and a "NEWS" link **244**A. An advertisement banner **246**A is displayed just below the horizontal group of links and just above a "NEWS SPARKS MARKET" headline **248**A. Frame **214** also includes a pair of graphic image objects, including a DOW chart **250**A and a NASDAQ chart **252**A. A set of user input objects is disposed adjacent to DOW chart **250**A within a graphic object **254**A, including an "ACCOUNT #" input box **255**A, an "ACCESS CODE" input box **256**A, and a "LOGIN" button **257**A. In addition to the foregoing objects, frame **214** also includes text objects **258**A and **260**A.

An HTML listing corresponding to web page **210** is presented below as LISTING 1. Note that LISTING 1 sometimes refers to object descriptions and link paths rather than the text or path location of actual objects for simplicity, and that other elements commonly found in HTML pages, such as META entries, are omitted for clarity.

LISTING 1

```
<html>
<head><title>"MARKET HOME"</title></head>

<body bgcolor="#FFFFFF" link="0033CC" vlink="0033CC">

<frameset cols="25%,75% frameborder=0 border=0>
<frame>
<align=left><align=top>
<img src="/directory path/logo.gif" align = left border="0" height="80" width="100">
 <br><br>
 <t3>TEXT HEADER #1 align=left</t3><br>

 <table width="90%" border=0 cellspacing=10 cellpadding=0 bgcolor="#000000"
 align=center>
        <tr>
                <a href="URL or path for LINK #5" <img src="/directory
                path/GRAPHIC#2" height="50" width ="150></a>
        <tr>
```

-continued

LISTING 1

```
19.                     <a href=”URL or path for LINK #6” <img src=”/directory
20.                     path/GRAPHIC#3" height=”50” width =”150></a>
21.             <tr>
22.                     <a href=”URL or path for LINK #7” <img src=”/directory
23.                     path/GRAPHIC#4” height=”50” width =”150></a>
24.             <tr>
25.                     <a href=”URL or path for LINK #8” <img src=”/directory
26.                     path/GRAPHIC#5” height=”50” width =”150></a>
27.  </table>
28.             <br>
29.                     <t3>TEXT HEADER #1 align=left</t3>
30.         <br>
31.  <table width=”90%” border=0 cellspacing=10 cellpadding=0 bgcolor="#000000"
32.   align=center>
33.             <tr>
34.                     <a href=”URL or path for LINK #9” <img src=”/directory
35.                     path/GRAPHIC#6” height=”50” width =”150></a>
36.             <tr>
37.                     <a href=”URL or path for LINK #10” <img src=”/directory
38.                     path/GRAPHIC#7” height=”50” width =”150></a>
39.             <tr>
40.                     <a href=”URL or path for LINK #11” <img src=”/directory
41.                     path/GRAPHIC#8” height=”50” width =”150></a>
42.
43.  </table>
44.  </frame>
45.
46.  <frame>
47.
48.  <table>
49.             <tr>
50.                     <table width="100%" border=0 cellspacing=15 cellpadding=0
51.                     bgcolor="#000000" align=center>
52.                 <tr>
53.                     <td><a href=”URL or path for link#1”> alt=”QUOTES”</a>
54.                     <td><a href=”URL or path for link#2”> alt=”HOT PICKS”</a>
55.                     <td><a href=”URL or path for link#3> alt=”CALENDERS”</a>
56.                     <td><a href=”URL or path for link#4>alt=”NEWS”</a>
57.  </table><br>
58.             <br>
59.                     <img src=”URL for GRAPHIC #9” align=center
60.                     border=”0” height=”80” width=”325”>
61.             <br><t1>HEADLINE TEXT>/t1>
62.             <table>
63.                 <Colgroup span=”2”>
64.                     <Col width = “400” align=“center”>
65.                     <Col width = “200” align=”center”>
66.                     <tr><td>
67.                         <img src=”/directory path/GRAPHIC #10” align = center
68.                         border=“0” height=”180” width=”350”>
69.                     <td>
70.         /* INPUT FOR ACCOUNT NUMBER AND ACCESS CODE */
71.             <SCRIPT LANGUAGE =”Javascript”>
72.         <!---
73.                     [Javascript variable declarations]
74.                     [Javascript functions to enable login] ---!>
75.         </SCRIPT>
76.                 <table>
77.                  <td>
78.                     <img src=”/directory path/GRAPHIC #11” align = center>
79.                     <table width=”150” height=”25”>
80.                     <td>
81.                     <font size=−2 face="arial,helvetica,verdana">Account #</font>
82.                     <tr><input type=text name="USERID" maxlength=9 size=20>
83.                     <tr><font size=−2 face="arial, helvetica">Access Code:</font>
84.                     <tr><input type=password name="PASSWORD" maxlength=10 size=20
85.                         onKeyDown="SuppressEnterBell(event)"
86                          onKeyPress="SuppressEnterBell(event)"
87                          onKeyUp="SubmitOnEnter(event)">
88.                     <br> 
89.                     <br><input type="button" value="Login"
90.                      OnClick="ProcessForm( )">  <input type="reset">
91.                     <br> 
92.                     </td>
93.                     </table>
94.                 </table>
95.         <tr>
96.                     <img src=”/directory path/GRAPHIC #12“ border=“0
```

-continued

LISTING 1

```
97.                    height="200" width="350">
98.        <tr>
99.                        <p>TEXT FOR TEXT OBJECT #1</p><br>
100.                       <p>TEXT FOR TEXT OBJECT #2</p>
101.               </table>
102.            </frame>
103.   </frameset>
104.   </html>
```

Web page documents comprise HTML code that is parsed, interpreted, and rendered by a browser. An HTML document comprises a plurality of HTML "markup" elements (tags) with corresponding attributes, that are used to describe the layout and formatting of various objects, including plain text and graphic objects, embedded between tag pairs. Exemplary elements include text tags (e.g., for bolding text), links (e.g.,), formatting (e.g., <p></p> for creating a new paragraph, graphical (e.g., <img src="name">), wherein "name" defines an absolute or relative location at where an image is stored, tables (e.g., <table></table>) creates a table, and forms (e.g., <form></form> creates all forms).

As of Netscape Navigator 3.0 (and other later browsers), web pages could include frames. When using frames, the display page is divided into multiple framed areas. Framing enables a single display page to include source code from several HTML documents (one for each frame) or optionally, enables a single document to include more complicated grouping of contents whereby different content groups are contained in separate frames. Frames are commonly found on the web pages at sites that display a great deal of text and graphical content, such as MSN.com, ESPN.com, and USA-Today.com.

With reference to the flowchart of FIG. **5**, the process for translating the HTML content into a scalable vector representation proceeds as follows. The process is initiated when the proxy server receives the HTML corresponding to the parent document (and frame documents, if appropriate), whereupon a pre-rendering parsing of the HTML is performed to determine where to place the various objects on the display page in a block **150**. For example, elements such as tables, column definitions, graphic images, paragraphs and line breaks are identified. If frames are included, each frame is examined in the sequential order it appears in the HTML document, or the order in which the HTML documents corresponding to the frames in a frameset are downloaded to the browser. During further processing, the actual objects are rendered in their respective positions. Some of these objects are rendered almost immediately, such as plain text, while other objects, such as graphic objects, must first be retrieved prior to being fully-rendered. With respect to tables, there are some instances in which all of the objects corresponding to the cells in the table must be retrieved prior to rendering any of the table, while a well-designed table can be rendered incrementally. For example, by using Column grouping, the format of the corresponding table can be quickly determined by the browser. In some instances, one or more bitmaps may actually need to be fetched before the page layout can be determined.

Next, in a block **152**, the content is separated into objects based on logical groupings of content portions and a page layout is built using bounding boxes that are produced for each object. As the primary HTML document is parsed, logical groupings of content will emerge. For instance, text content contained within paragraph tags <p></p> forms a logical grouping of text content. In essence, a logical grouping means the content should appear together as a logical group, such as within a substantially rectangular outline, in the rendered page. Other logical groupings include frames, table content, row content, single line entries such as headlines and headers, and user-interface objects, as well as graphic layout objects, such as separator bars, and graphic images. In addition to logically grouping content into objects, a "bounding box" is defined for each object. In general, the bounding box defines an outlined shape within which the content (text or graphic image) will appear. In most instances, the bounding box will be substantially rectangular in shape. However, bounding boxes comprising more complex shapes may also be produced.

In further detail, the following explains how objects corresponding to graphic images are produced. In HTML, objects comprising graphic content are identified by an <img src="/local directory path/graphic image file" (for a local graphic image) or "URL" (for a remote graphic image)> or <object> or other tags. In the foregoing tag, local graphic images are typically stored on the same server as the web page, or another computer that is local to the site's server, and generally are located through a local directory path (absolute or relative to the location of the present page) that points to the graphic image file. Remote images are those images that are stored on servers at sites that are remote to the web server. For example, with reference to LISTING 1, when the parser encounters line 9, the browser identifies that data comprising a graphic image corresponding to logo graphic object **1** will be arriving (or may have already been received), and the displayed image is to have a height of 80 pixels and a width of 100 pixels. The location of each object on a display page will be dependent on previous HTML layout elements, such as tables, paragraphs, line breaks, and other graphic objects. The size and location of the other graphic objects (i.e., graphic objects #2-12) on the page are determined in a similar manner. The HTML code for these objects are shown in lines **16**, **19**, **22**, **25**, **34**, **37**, **40**, **59**, **67**, **78** and **96**, respectively. As identified in the HTML code, data corresponding to graphic objects #**9** (advertisement banner **46**A) is forwarded to the browser from an external site (as indicated by the URL to GRAPHIC #9), while graphic objects **1-8** and **10-12** are sent from the web site the parent HTML document is sent from.

In a similar manner, the foregoing technique is applied to the HTML code in the primary document to identify other types of objects as well. In addition to parsing the primary HTML document, similar processing is performed on referenced documents, such as documents that include frame content that is defined and stored separate from the primary HTML document.

A representation of the results of the functions performed in block **152** are shown in FIG. **4**B. In the Figure, objects corresponding to the original content of FIG. **4**A are shown

with an appended "B" that is added to each object's root reference number, wherein the root reference number for an object is that same as the logically grouped content in FIG. **4**A that it corresponds to, e.g., an object **248**B is generated for "NEWS SPARKS MARKET" headline **248**A, etc.

Next, in a block **154**, the page layout is defined based on the bounding boxes. In actuality, generation of the page layout information is performed in conjunction with defining the boundary boxes for the objects, wherein the location of a given object is based on the location of other related (e.g., if within a table) or non-related objects corresponding to HTML content that have been previously parsed. For example, the location of a given paragraph will depend on the other content for the page that are listed prior to the definition for the paragraph in the primary HTML document or referenced document, if applicable. As the HTML content of the primary and any referenced HTML documents are parsed, the page layout is generated based on the various HTML tags and the content embedded between tag pairs and/or referenced by a tag pair statement (e.g., graphic images).

As will be recognized by those skilled in the art, the functions performed in blocks **150**, **152**, and **154** are commonly performed by conventional browsers during a pre-rendering process. In some browsers, these functions are performed by the Mozilla rendering engine, which comprises open source software that is readily available for use by developers. At present, the software for the Mozilla rendering engine may be accessed via the Internet at www.mozilla.org. Accordingly, in one embodiment, the present invention uses core functionality provided by the Mozilla rendering engine source code to perform the functions of block **150**, **152**, and **154**.

At this point, the present invention deviates substantially from the prior art by using the various object layout data generated during the pre-rendering process to generate a scalable vector representation of the original page content. First, in a block **156**, a datum point is defined for the page and the bounding box for each object. For example, as shown in FIG. **4**C, a rendered page datum **262** is defined to be coincident with the upper left hand corner of the display frame of the rendered page for the web page. Generally, any point on the page may be used as the page datum—the only requirement is that the page datum that is selected is used consistently throughout the process. The use of the upper left hand corner of the display frame is advantageous since the location of the first object encountered in the HTML code for a page is located relative to this corner.

In general, the datum points for each object may also be located any place on the object, as long as the object datum points are used in a predictable manner. For example, as depicted in FIG. **4**C, various datum points for corresponding objects are defined to be coincident with the upper left hand corner of the bounding box for that object, wherein the object's datum point shares the root reference number of the object with an appended "C."

Once the page's datum point and an object's datum point are known, a vector between these points is generated for each object in a block **158**. With reference to FIG. **4**D, in one embodiment, wherein the page datum point corresponds to the upper left and corner of the display frame and is assigned an XY value **266** of 0,0, the vector for a given object may be stored as the XY value of the datum point of that object relative to 0,0, such as a value of 150, 225 (ref. num. **268**) for a vector **250**D pointing to an object datum **250**C, and a value of 150, 425 (ref. num. **270**) for a vector **252**D pointing to an object datum **252**C. In another embodiment, each vector may be stored as XY data relative to a 0,0 datum point corresponding to the upper left hand corner of the frame the object belongs to. For example, a vector **250**D' from a frame datum **214**D to object datum **250**C is stored as 20, 200 (ref. num. **268'**), while a vector **252**D from frame datum **214**D to object datum **252**C is stored as 20, 425. In this embodiment, offset information for each frame relative to a known datum will also be stored, as depicted by a vector **214**D.

The scalable vector representation is completed in a block **160**, wherein a reference is created for each object that includes or links an object's content and attributes, such as object type (e.g., text, image), object typeface, and boundary box parameters, to the object's vector. For example, object **250**B is a graphic image having a vector **250**D and a bounding box that is **180** pixels high and **350** pixels wide, while object **252**B is a graphic image having a vector **252**D and a bounding box that includes a height of **200** pixels and a width of **350** pixels. This enables client-side operations to be performed that only initially consider the vectors, wherein if it is determined that a vector's endpoint (and/or the bounding box corresponding to the object the vector points to) would appear off of a display, there is no need to retrieve the content and attribute data linked to the vector. This concept is explained in further detail in the following section.

It is noted that a portion of the display content produced on a client device will never contain any rendered content, as this portion is reserved for the browser's user interface. In WINDOWS™ environments, this portion will include the browser's window frame, as well as the pulldown and icon menus provided in the browser's user interface, which are depicted by a box **264** in the Figures herein.

Client-Side Software and Processing

As discussed above, the present invention supports a wide variety of clients, including land-based clients and wireless clients. Each client requires some client-side software that enables the scalable vector content data provided to it to be rendered at a user-selectable scale factor and offset on the client's display, such as a monitor or built-in LCD screen.

By enabling original content from a web site to be displayed in such a resolution-independent manner, users will be able to view content in a manner that did not previously exist, greatly enhancing the user experience. For example, in some implementations the client may be a personal computer (PC). Using a least-common denominator approach, many web pages are designed for a smaller resolution (for example 640×480 pixels, a minimum resolution commonly supported by nearly all PC's, including legacy PC's) than the resolution provided by the video output capabilities available with many of today's PC's, such as 1024×768 pixels, 1280×1024 pixels, and even 1600×1200 pixels. As a result, when these web pages are displayed on a high-resolution display, they occupy only a portion of the display, making portions of the pages, especially those portions containing small text, difficult to read. By enabling users to selectively magnify the entire page, these design flaws are easily overcome. Alternatively, the client may be a small device, such as a hand held computer or a cell phone, which has a smaller display resolution than common Web pages are designed for. As explained below, through use of the invention's scalable vector representation and client-side processing, users are enabled to view the entire content of billions of existing Web pages using hand-held devices in a simple and reasonable way.

In one embodiment, the client software may be a plug-in to a Web browser, such as Netscape Navigator or Microsoft Internet Explorer. Such a plug-in might have the browser download the data and display it in a sub-window of the browser. Alternatively, the client software may be a Java applet running in a browser. As another option, the client software may be a stand-alone program that interfaces with

the proxy server or proxy software directly. The client software may bypass the proxy when requesting information that won't be translated to vectors, such as bitmaps.

With reference to FIG. **6**, client-side processing proceeds in the following manner. In a block **160**, the vector representation data (i.e., vectorized HTML content and compressed bitmap content) for the web page is gathered at the client. Typically, this data will be stored in a cache at the client as it is being received, and the client simply retrieved the data from the cache. In a block **162**, a display list of vectors is built. This process is well known in the CAD arts, and is enabling rapid zooming of vector-based objects. In a block **164**, user selectable scale and offset (pan) values are determined. Based on various user interactions with the user-interface of the client, the user is enabled to control the zoom (size) and offset of the rendered page. For example, suppose the user provides zoom and offset inputs to produce a rendered page **210**E, as shown in FIG. **4**E. In this rendered page, the original origin is now off of the screen (the page image is shifted upward and toward the left—see FIG. **4**F), and the view has been scaled approximately 1.3 times.

Next, in a block **166**, the vectors and boundary boxes are processed based on the scale and offset, and a bounding box defining the limits of the display content is determined. The results of this step are shown in FIG. **4**F, while FIG. **4**G shows specific details on how the vectors and bounding boxes corresponding to image objects **250**B and **252**B (now **250**B' and **252**B', respectively) are processed. Logically, there are generally two ways to scale and offset the rendered content. In one embodiment, vectors and bounding boxes are mapped to a virtual display area in memory that has much greater resolution (e.g., 100,000×100,000 pixels) than any real display, and a virtual display limit bounding box is scaled and moved around over the virtual display area. Accordingly, during subsequent processing described below, objects falling within the display bounding box are rendered by reducing the scaling of those objects in the virtual display to how the objects will appear on the client device display relative to the virtual display bounding box. In the alternate, a fixed reference frame corresponding to the display resolution of the client device screen is maintained, wherein all vectors and bounding boxes are scaled and offset relative to the fixed reference frame. Each scheme has its advantages and disadvantages. One advantage of the second method is that the display bounding box is always maintained to have a size that matches the resolution of the content display area on the client device.

As shown in FIG. **4**G, respective offsets in X and Y, (−ΔX and −ΔY in the Figure) are applied to the starting point of each of the vectors. The vectors are then scaled by a scale factor "SF." The results of the new vectors are depicted by vectors **250**D" and **252**D". This produces a new datum for each object's bounding box that is relative to rendered page datum **262**, which remains fixed. As discussed above, only a portion of the display screen will actually be used to display content (as defined by a display limit bounding box **266** in this embodiment), while other portions of the screen, including box **264**, will comprise a generally fixed-size user interface. Accordingly, rendered page datum **262** is not located at the upper left hand corner of the display area, although it possibly could be located at this point when either the current user interface is inactive (i.e., the display portion of the user interface is temporary disabled) or the user interface is contained in other portions of the display.

This foregoing process establishes a starting point (the new datum) for where the content in each object's bounding box will be rendered. At this point, each object's bounding box is then drawn from its new datum using the scaling factor. For example, in the original web page **210**D (FIG. **4**D), bounding box **250**B had an X-axes datum of 150 pixels, a Y-axis datum of 225 pixels, and a height and width of 180×350 pixels. In contrast, after being offset and scaled, bounding box **250**B' has an X-axis datum of 150*SF−ΔX, a Y-axis datum of 225*SF−ΔY, and a height and width of 180*SF×350*SF.

Returning to the flowchart of FIG. **6**, once the vectors and bounding boxes are offset and scaled, content corresponding to objects having at least a portion of their bounding boxes falling within the display limit bounding box is retrieved from the client device's display list in a block **168**. For examples, as shown in FIG. **4**F, content corresponding to all of the objects except for those falling entirely outside of display limit bounding box **266** (objects **216**, **238**, **240**, **242** and **244**) is retrieved from the display list. That content is then scaled in a block **170**. For image content, this comprises decompressing and scaling the compressed bitmaps corresponding to those images. For text content, this comprises scaling the font (i.e., typeface) that the text content portions of the web page are written in the parent HTML document and any referenced documents. There are various techniques for typeface scaling that may be implemented here, depending on the available resources provided by the operating system of the client device. For example, for WINDOWS™ operating systems, many TRUETYPE™ fonts are available, which use a common scalable definition for each font, enabling those fonts to be scaled to just about any size. In other cases, such as current PDA (e.g., Palm Pilots) operating systems, there is no existing feature that supports scaling fonts. As a result, bitmapped fonts of different font sizes and styles may be used. In addition to scaling image and text content, other types of content, such as separator lines and borders may also be scaled by block **170**.

The process is completed in a block **172**, wherein those portions of the scaled content falling within the display limit bounding box are rendered on the client device's display.

As discussed above, it is foreseen that the invention will be used with client devices having small, low resolution displays, such as PDAs and pocket PCs. Examples of various views of an exemplary web pages obtained from the YAHOO™ web site are shown in FIGS. **7**A-B, **8**A-B and **9**A-B. For instance, FIG. **7**A represents how the YAHOO™ home page might appear on a Palm IIIc color PDA.

In addition to directly scaling and offsetting content, the client user-interface software for PDA's provides additional functionality. For instance, a user may select to view a column (results represented in FIG. **7**B by tapping that column with a stylus, a shown in FIG. **7**A. Similarly, the user may select to zoom in on an image by tapping the image with the stylus, as shown in FIGS. **8**A and **8**B, or select to view a paragraph in an article by tapping on the paragraph, as shown in FIGS. **9**A and **9**B. It is noted that in some instances, the display of the paragraph may be reformatted to fit the characteristics of the display, rather than following the original format in the zoom-out view.

It is further noted that that different scaling factors can be applied to the X and Y axis so as to change the aspect ratio of the display. For example, a Web page may be designed to be displayed on a computer having a resolution of 800×600 pixels, or a 4× to 3Y aspect ratio. In this case, the display corresponds to a "landscape" layout, wherein there are more pixels along the X axis than along the Y axis. Conversely, many handheld devices display images having a "portrait" layout, wherein there are more pixels along the Y axis than the X axis. By enabling different scaling factors to be applied to the X and Y axes, the present invention enables the aspect

ratio of a rendered display image to be adjusted to better fit the aspect ratio of the client device.

An Exemplary Computer Architecture

An exemplary machine in the form of a computer system **500** in which features of the present invention may be implemented will now be described with reference to FIG. **10**. Computer system **500** may represent a workstation, host, server, print server, or printer controller. Computer system **500** comprises a bus or other communication means **501** for communicating information, and a processing means such as processor **502** coupled with bus **501** for processing information. Computer system **500** further comprises a random access memory (RAM) or other dynamic storage device **504** (referred to as main memory), coupled to bus **501** for storing information and instructions to be executed by processor **502**. Main memory **504** also may be used for storing temporary variables or other intermediate information during execution of instructions by processor **502**. Computer system **500** also comprises a read only memory (ROM) and/or other static storage device **506** coupled to bus **501** for storing static information and instructions for processor **502**.

A data storage device **507** such as a magnetic disk or optical disc and its corresponding drive may also be coupled to bus **501** for storing information and instructions. Computer system **500** can also be coupled via bus **501** to a display device **521**, such as a cathode ray tube (CRT) or Liquid Crystal Display (LCD), for displaying information to an end user. Typically, an alphanumeric input device **522**, including alphanumeric and other keys, may be coupled to bus **501** for communicating information and/or command selections to processor **502**. Another type of user input device is cursor control **523**, such as a mouse, a trackball, or cursor direction keys for communicating direction information and command selections to processor **502** and for controlling cursor movement on display **521**.

A communication device **525** is also coupled to bus **501**. Depending upon the particular presentation environment implementation, the communication device **525** may include a modem, a network interface card, or other well-known interface devices, such as those used for coupling to Ethernet, token ring, or other types of physical attachment for purposes of providing a communication link to support a local or wide area network, for example. In any event, in this manner, the computer system **500** may be coupled to a number of clients and/or servers via a conventional network infrastructure, such as a company's Intranet and/or the Internet, for example.

Importantly, the present invention is not limited to having all of the routines located on the same computer system. Rather, individual objects, program elements, or portions thereof may be spread over a distributed network of computer systems. Additionally, it is appreciated that a lesser or more equipped computer system than the example described above may be desirable for certain implementations. Therefore, the configuration of computer system **500** will vary from implementation to implementation depending upon numerous factors, such as price constraints, performance requirements, and/or other circumstances. For example, according to one embodiment of the present invention, a cell phone or a hand held computer may comprise only a processor or a micro controller and a memory, such as a micro code ROM or RAM, for storing static or dynamically loaded instructions and/or data.

In the foregoing specification, the invention has been described with reference to specific embodiments thereof. It will, however, be evident that various modifications and changes may be made thereto without departing from the broader spirit and scope of the invention. The specification and drawings are, accordingly, to be regarded in an illustrative rather than a restrictive sense.

What is claimed is:

1. A method for enabling a user to perform full page browsing of a Web page on a hand-held wireless device in a manner that replicates browsing the Web page on a desktop Web browser, wherein the Web page comprises HTML-based content and cascading style sheet (CSS) content defining a page layout and design of display content on the Web page, the method comprising:

in response to a user request to access the Web page, retrieving HTML-based content and the CSS content corresponding to the Web page and processing the HTML-based content and CSS content with the Web browser rendering engine to interpret the page layout and design of the display content on the Web page at a first scale; and

employing scaled page layout information and/or content derived therefrom to generate scaled Web page content at multiple scale factors; and

enabling a user of the mobile device to zoom in on an image via a user input to a touchscreen display and wherein said scaled Web page content including one or more images is generated by scaling bounding boxes corresponding to the one or more images to produce scaled bounding boxes and, for each of the one or more images, scaling content associated with the image to produce a scaled image that fits within its corresponding scaled bounding box;

and enabling the user to perform full page browsing of the Web page at multiple zoom levels by generating corresponding views of the Web page on the hand-held device under which the page layout and design of the display content is retained relative to the interpretation of the page layout and design of the display content at the first scale,

wherein each of the Web browser rendering engine and a Web browser rendering engine employed by a desktop browser for which browsing is replicated are the same.

2. The method of claim **1**, wherein the views of the Web page are generated by employing a vector-based rendering engine to effect scaling of the display content as interpreted at the first scale.

3. The method of claim **1**, wherein the method enables the user to browse arbitrary user-selected pages from among billions of Web pages accessible via the World Wide Web on the hand-held wireless device in a manner that replicates browsing of those Web pages on a desktop Web browser in accordance with the method.

4. The method of claim **1**, wherein a browser is implemented on the hand-held wireless device having a content display area in which Web page views are displayed, further comprising enabling the user to perform zooming operations using tap-based user input detected by the touchscreen display and within the content display area.

5. The method of claim **1**, wherein Web page views are displayed within a content display area, the method further comprising:

generating a scaled view of the Web page on the hand-held wireless device under which a width of the Web page is rendered to fit across a width of the content display area,

wherein the scaled view of the Web page comprises a magnified view of the Web page as interpreted at the first scale.

6. The method of claim 1, wherein each scaled view of the Web page comprises a magnified view of a corresponding portion of the Web page as interpreted at the first.

7. The method of claim 1, wherein there is no degradation in quality of the presentation of text content when the zoom level is increased.

8. The method of claim 1, wherein a browser is implemented on the hand-held wireless device having a content display area in which Web page views are displayed, further comprising enabling a user to zoom on a column of content displayed in a current view of the Web page by tapping, via the touchscreen display, within a portion of the column, wherein in response thereto, a zoom level, offset, and view of the Web page is updated such that a width of the column is displayed to fit across a width of the content display area in the updated view.

9. The method of claim 1, wherein the Web page includes at least one image, and wherein a browser is implemented on the hand-held wireless device having a content display area in which Web page views are displayed, further comprising enabling a user to zoom on an image displayed in a current view of the Web page by tapping, via the touchscreen display, within the image, wherein in response thereto, a zoom level, offset, and view of the Web page is updated such that the image is displayed to fit across a width of the content display area in the updated view.

10. The method of claim 1, wherein a browser is implemented on the hand-held wireless device having a content display area in which Web page views are displayed, further comprising enabling a user to zoom on a paragraph displayed in a current view of the Web page by tapping, via the touchscreen display, on text content within the paragraph, wherein in response thereto, a zoom level, offset, and view of the Web page is updated such that paragraph is displayed to fit across a width of the content display area in the updated view.

11. The method of claim 1, further comprising:

defining a content display area comprising a rectangular portion of a browser user interface on which Web page content is to be displayed;

generating scaled display content in accordance with a current zoom level and pan offset; and

employing a display limit bounding box associated with the content display area to define a rectangular portion of the scaled display content that is to be displayed within the content display area to render a view of the Web page in accordance with the current zoom level and pan offset,

wherein a resolution of the display limit bounding box is the same as a resolution of the content display area.

12. The method of claim 1, where the touch screen display of the hand-held wireless device is disposed on a top portion of the device.

13. The method of claim 1, where the hand-held wireless device comprises a mobile phone.

14. The method of claim 1, wherein the hand-held wireless device is configured to be held in the palm of a user.

15. A method to facilitate browsing of a Web page on a device employing a browser having a browser display area, comprising:

retrieving HTML-based content and cascading style sheet (CSS) content corresponding to the Web page defining layout information and attributes of content on the Web page comprising a plurality of objects including text objects, image objects, and layout objects;

processing the HTML-based content with a Web browser rendering engine to generate page layout information defining a layout location for each of the plurality of objects included in the Web page as interpreted at a first scale, wherein generation of the page layout information includes,

for each of the plurality of objects,

generating page layout information for the object including a bounding box;

generating information that links the object with its corresponding page layout information;

wherein the page layout information further includes information from which a page layout location of each of the bounding boxes can be determined;

employing scaled page layout information and/or content derived therefrom to generate scaled Web page content at multiple scale factors;

enabling a user of the mobile device to zoom in on an object via a user input to the touchscreen display and wherein said scaled Web page content including one or more objects is generated by scaling bounding boxes corresponding to the one or more objects to produce scaled bounding boxes and, for each of the one or more objects, scaling content associated with the object to produce a scaled object that fits within its corresponding scaled bounding box; and

enabling zooming on objects on the Web page, wherein, in response to a user tapping on an object within a first Web page view, a zoom level, offset, and view of the Web page is updated based on page layout information corresponding to the object,

wherein the objects comprise a plurality of different types of objects, and wherein under the updated zoom level and Web page view the layout locations of objects are retained relative to the layout location of the objects as interpreted at the first scale.

16. The method of claim 15, wherein one of the plurality of different types of objects comprises a column, the method further comprising:

in response to a user tapping within an area on a view of the Web page occupied by at least a portion of a column, zooming the Web page view on the column to produce a zoomed view of the Web page, wherein in the zoomed view of the Web page the column is enlarged and centered horizontally within the browser display area.

17. The method of claim 16, wherein the column is enlarged so as to fit a width of the column across a width of the browser display area.

18. The method of claim 15, wherein one of the plurality of different types of objects comprises an image, the method further comprising:

in response to a user tapping on an image, zooming the Web page view on the image to produce a zoomed view of the Web page, wherein in the zoomed view of the Web page the image is enlarged and centered horizontally within the browser display area.

19. The method of claim 18, wherein the image is enlarged so as to fit a width of the image across a width of the browser display area.

20. The method of claim 15, wherein one of the plurality of different types of objects comprises a paragraph, the method further comprising:

in response to a user tapping on a paragraph, zooming the Web page view on the paragraph to produce a zoomed view of the Web page, wherein in the zoomed view of the Web page, the paragraph is enlarged and centered horizontally within the browser display area.

21. The method of claim 20, wherein the paragraph is enlarged so as to fit a width of the paragraph across a width of the browser display area.

22. The method of claim 15, wherein the Web page comprises Cascading Style Sheet (CSS) content defining page layout aspects of the Web page, and wherein the page layout information is generated, at least in part, by processing the CSS content.

23. The method of claim 15, wherein the device comprises a hand-held wireless device and the Web page is designed to be viewed by a desktop Web browser, further comprising, after zooming the Web page view on the object, enabling the user to browse an entirety of the HTML-based content at the updated zoom level by panning views of the Web page in response to corresponding user input, wherein each panned view of the Web page comprises a magnified view of a corresponding portion of the Web page as would be rendered by a desktop Web browser employing the Web browser rendering engine at the first scale.

24. The method of claim 15, further comprising, after zooming the Web page view on the object, enabling the user to browse an entirety of the HTML-based content at the updated zoom level by panning views of the Web page, wherein the layout of objects in each panned view is retained relative to the layout of the objects as interpreted by the Web browser rendering engine at the first scale.

25. The method of claim 15, wherein the device comprises a hand-held device.

26. The method of claim 24, wherein the hand-held device is configured to be held in the palm of a user.

27. The method of claim 15, wherein the device comprises a mobile phone.

28. A mobile device, comprising:

a processor;

a touchscreen display, operatively coupled to the processor;

a wireless communication interface, operatively coupled to the processor, to facilitate wireless communication with a network that supports access to the Internet; and

memory, operatively coupled to the processor, in which a plurality of instructions are stored including instructions comprising an operating system and a mobile browser having a Web browser rendering engine, wherein execution of the plurality of instructions by the mobile device enable the mobile device to perform operations including,

enabling a user to perform full page browsing of a Web page on the mobile device in a manner that replicates browsing the Web page on a desktop Web browser, wherein the Web page comprises HTML-based content and cascading style sheet (CSS) content defining a page layout and design of display content on the Web page, and enabling full page browsing of the Web page is implemented by,

in response to a user request to access the Web page, retrieving HTML-based content and CSS content corresponding to the Web page and processing the HTML-based content and CSS content with the Web browser rendering engine to interpret the page layout and design of the display content on the Web page at a first scale;

enabling scaled page layout information and/or content derived therefrom to generate scaled Web page content at multiple scale factors; and

enabling a user of the mobile device to zoom in on an image via a user input to the touchscreen display and wherein scaled Web page content including one or more images is generated by scaling bounding boxes corresponding to the one or more images to produce scaled bounding boxes and, for each of the one or more images, scaling content associated with the image to produce a scaled image that fits within its corresponding scaled bounding box;

wherein each of the Web browser rendering engine and a Web browser rendering engine employed by a desktop browser for which browsing is replicated are the same.

29. The mobile device of claim 28, wherein the plurality of instructions further comprise instructions for implementing a vector-based rendering engine, and wherein scaled views of the Web page are generated by executing instructions corresponding to the vector-based rendering engine to effect scaling of the display content as interpreted at the first scale.

30. The mobile device of claim 28, wherein execution of the plurality of instructions enables the user to browse arbitrary user-selected pages from among billions of Web pages accessible via the World Wide Web on the mobile device in a manner that replicates browsing of those Web pages on a desktop Web browser.

31. The mobile device of claim 28, wherein the mobile browser is configured to display Web page views within a content display area on the touchscreen display, and wherein execution of the instructions further enables the user to perform zooming operations using tap-based user input detected by the touchscreen display and within the content display area.

32. The mobile device of claim 28, wherein the mobile device comprises a mobile phone.

33. The mobile device of claim 28, wherein the mobile device is configured to be held in the palm of a user.

34. A mobile device, comprising:

a processor;

a touchscreen display, operatively coupled to the processor;

a wireless communication interface, operatively coupled to the processor, to facilitate wireless communication with a network that supports access to the Internet; and

memory, operatively coupled to the processor, in which a plurality of instructions are stored including instructions comprising an operating system and a browser having a Web browser rendering engine, wherein execution of the plurality of instructions by the mobile device enable a user to perform full page browsing of a Web pages on the mobile device in a manner that replicates browsing the Web pages on a desktop Web browser by performing operations comprising,

in response to a user request to access each of a plurality of Web pages arbitrarily selected from among billions of Web pages accessible via the World Wide Web,

retrieving HTML-based content associated with the Web page and processing the HTML-based content with the Web browser rendering engine to interpret a page layout and design of display content on the Web page at a first scale and generate corresponding page layout information, wherein the page layout information defines a layout location for each of a plurality of objects included in the Web page as interpreted at the first scale and generation of the page layout information includes,

for each of the plurality of objects,

generating page layout information including a bounding box for the object; and

generating information that links the object with its corresponding page layout information;

wherein the page layout information further includes information from which a page layout location of each of the bounding boxes can be determined;

enabling the user to perform zooming of the Web page at multiple zoom levels and pan views of the Web page at each of the multiple zoom levels by generating corresponding scaled views of the Web page, wherein enabling the user to perform zooming operations includes performing zooming operations in response to tap-based user input, and wherein generation of a scaled view of the Web page is effected by,

for each text object to be included in scaled display content employed to generate the scaled view,

scaling page layout information associated with the text object using a scale factor associated with the scaled display content to determine a scaled datum that defines a scaled page layout location of the text object;

determining display attributes for the text object, including a font typeface, font size and color attribute; and

employing a scalable font associated with the font typeface to render text associated with the text object in a color associated with the color attribute, wherein the text is rendered relative to a location associated with the scaled datum for the text object, and wherein the scale applied to the scalable font is a function of the scale factor and the font size; and

for each image object to be included in scaled display content employed to generate the scaled view,

scaling page layout information associated with the image object using the scale factor to determine a scaled datum that defines a scaled page layout location of the image object; and

scaling scalable image content corresponding to the image object to produce a scaled image having a size that is a function of the scale factor and the bounding box corresponding to the image object; and

generating a scaled view of the Web page on the touch-screen display under which a width of the Web page is rendered to fit across a width of a content display area employed by the browser for displaying Web views.

35. The mobile device of claim **34**, wherein each of the Web browser rendering engine and a Web browser rendering engine employed by a desktop browser for which browsing is replicated are the same.

36. The mobile device of claim **34**, wherein a portion of the billions of Web pages comprise Web pages including Cascading Style Sheet (CSS) content defining aspects of the design of those Web pages, and wherein execution of the instructions performs further operations comprising:

in response to a user request to access a Web page including CSS content,

employing the Web browser rendering engine to interpret the page layout and design of the display content on the Web page in accordance with the CSS content.

37. The mobile device of claim **34**, wherein each scaled view of the Web page comprises a magnified view of a corresponding portion of the Web page as interpreted at the first scale, and wherein there is no degradation in quality of the presentation of text content when the zoom level is increased.

* * * * *