US009889022B2

(12) **United States Patent**
Moskowitz et al.

(10) **Patent No.: US 9,889,022 B2**
(45) **Date of Patent: *Feb. 13, 2018**

(54) **BI-DIRECTIONAL FIXATING TRANSVERTEBRAL BODY SCREWS AND POSTERIOR CERVICAL AND LUMBAR INTERARTICULATING JOINT CALIBRATED STAPLING DEVICES FOR SPINAL FUSION**

(75) Inventors: **Ahmnon D. Moskowitz**, Rockville, MD (US); **Mosheh T. Moskowitz**, Rockville, MD (US); **Nathan C. Moskowitz**, Rockville, MD (US); **Pablo A Valdivia Y Alvarado**, Cambridge, MA (US)

(73) Assignee: **Nathan C. Moskowitz**, Rockville, MD (US)

(*) Notice: Subject to any disclaimer, the term of this patent is extended or adjusted under 35 U.S.C. 154(b) by 278 days.

This patent is subject to a terminal disclaimer.

(21) Appl. No.: **13/210,157**

(22) Filed: **Aug. 15, 2011**

(65) **Prior Publication Data**

US 2013/0018468 A1 Jan. 17, 2013

Related U.S. Application Data

(60) Continuation of application No. 13/084,543, filed on Apr. 11, 2011, now Pat. No. 8,353,913, and a (Continued)

(51) **Int. Cl.**
A61F 2/44 (2006.01)
A61F 2/46 (2006.01)
(Continued)

(52) **U.S. Cl.**
CPC ..... ***A61F 2/4611*** (2013.01); ***A61B 17/0642*** (2013.01); ***A61B 17/7064*** (2013.01); (Continued)

(58) **Field of Classification Search**
CPC ..... A61B 17/0642; A61B 17/809; A61B 17/8894; A61B 17/7064; A61B 17/86; (Continued)

(56) **References Cited**

U.S. PATENT DOCUMENTS

2,360,942 A 10/1944 Ellerstein
4,064,881 A 12/1977 Meredith
(Continued)

FOREIGN PATENT DOCUMENTS

FR 2727003 5/1996
WO 2004/093749 11/2004
(Continued)

OTHER PUBLICATIONS

Vincent C. Traynelis, "Prosthetics and Biologics: The Wave of the Future," Clinical Neurosurgery, vol. 50, Proceedings of the Congress of Neurological Surgeons, Philadelphia, PA 2002, Chapter 9, pp. 207-219.

(Continued)

Primary Examiner — Pedro Philogene
(74) *Attorney, Agent, or Firm* — Fish & Richardson P.C.

(57) **ABSTRACT**

A self-drilling bone fusion screw apparatus is disclosed which includes at least first and second sliding boxes. A first screw member having a tapered end and a threaded body is disposed within the first sliding box, and a second screw member having a tapered end and a threaded body disposed within the second sliding box. An adjuster adjusts the height of the sliding boxes. The screw members are screwed into vertebral bodies in order to fuse the vertebral bodies together. A plurality of the self-drilling bone fusion screw apparatuses may be attached together and/or integrated via a plate or cage. Also disclosed is a cervical facet staple that includes a curved staple base and at least two prongs attached to the bottom surface of the curved staple base.

70 Claims, 38 Drawing Sheets

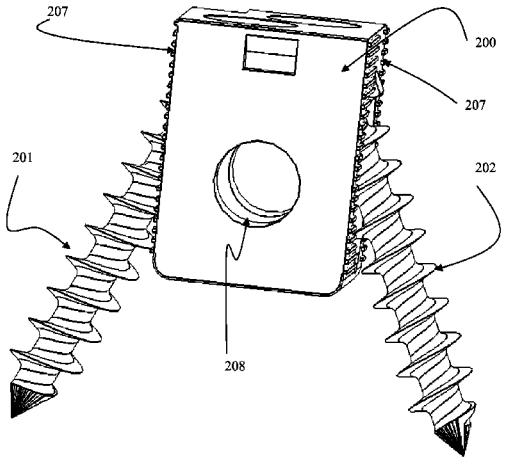

MEDTRONIC EXHIBIT 1044

Related U.S. Application Data

continuation of application No. 13/108,982, filed on May 16, 2011, said application No. 13/084,543 is a division of application No. 11/842,855, filed on Aug. 21, 2007, now Pat. No. 7,942,903, said application No. 13/108,982 is a continuation of application No. 11/842,855, filed on Aug. 21, 2007, now Pat. No. 7,942,903, which is a continuation-in-part of application No. 11/536,815, filed on Sep. 29, 2006, now Pat. No. 7,846,188, which is a continuation-in-part of application No. 11/208,644, filed on Aug. 23, 2005, now Pat. No. 7,704,279.

(60) Provisional application No. 60/670,231, filed on Apr. 12, 2005.

(51) **Int. Cl.**

A61B 17/064	(2006.01)
A61B 17/70	(2006.01)
A61B 17/80	(2006.01)
A61B 17/88	(2006.01)
A61B 17/86	(2006.01)
A61B 17/92	(2006.01)
A61F 2/28	(2006.01)
A61F 2/30	(2006.01)
A61B 17/00	(2006.01)

(52) **U.S. Cl.**

CPC ***A61B 17/809*** (2013.01); ***A61B 17/8635*** (2013.01); ***A61B 17/8894*** (2013.01); ***A61B 17/92*** (2013.01); ***A61F 2/447*** (2013.01); ***A61F 2/4465*** (2013.01); *A61B 17/86* (2013.01); *A61B 2017/00407* (2013.01); *A61B 2017/0641* (2013.01); *A61B 2017/0648* (2013.01); *A61B 2017/922* (2013.01); *A61F 2002/2835* (2013.01); *A61F 2002/3055* (2013.01); *A61F 2002/30133* (2013.01); *A61F 2002/30387* (2013.01); *A61F 2002/30448* (2013.01); *A61F 2002/30507* (2013.01); *A61F 2002/30579* (2013.01); *A61F 2002/30604* (2013.01); *A61F 2002/30772* (2013.01); *A61F 2002/30878* (2013.01); *A61F 2002/30879* (2013.01); *A61F 2002/30904* (2013.01); *A61F 2002/448* (2013.01); *A61F 2002/4475* (2013.01); *A61F 2002/4627* (2013.01); *A61F 2002/4681* (2013.01); *A61F 2002/4687* (2013.01); *A61F 2220/005* (2013.01); *A61F 2220/0025* (2013.01); *A61F 2230/0015* (2013.01); *A61F 2250/0007* (2013.01)

(58) **Field of Classification Search**

CPC A61B 2017/0641; A61B 2017/0648; A61B 2017/922; A61F 2/4465; A61F 2/447; A61F 2/4611; A61F 2250/0007; A61F 2002/2835; A61F 2002/30133; A61F 2002/30387; A61F 2002/30448; A61F 2002/30507; A61F 2002/3055; A61F 2002/30604; A61F 2002/30772; A61F 2002/30878; A61F 2002/4475; A61F 2002/448; A61F 2002/4627; A61F 2002/4681; A61F 2220/0025; A61F 2220/005; A61F 2230/0015; A61L 317/0642; A61L 317/809; A61L 317/8894

USPC 623/17.11–17.16; 606/300–305, 249, 99, 606/144, 151, 251, 266; 227/181.1

See application file for complete search history.

(56) **References Cited**

U.S. PATENT DOCUMENTS

4,554,914	A	11/1985	Kapp et al.	
4,599,086	A	7/1986	Doty	
4,636,217	A	1/1987	Ogilvie et al.	
4,904,261	A	2/1990	Dove et al.	
4,960,420	A	10/1990	Goble et al.	
4,997,432	A	3/1991	Keller	
5,005,749	A	4/1991	Aranyi	
5,062,850	A	11/1991	MacMillan et al.	
5,123,926	A	6/1992	Pisharodi	
5,290,312	A	3/1994	Kojimoto et al.	
5,405,391	A	4/1995	Henderson et al.	
5,413,583	A	5/1995	Wohlers	
5,454,819	A	10/1995	Knoepfter	
5,514,180	A	5/1996	Heggeness et al.	
5,660,188	A	8/1997	Groiso	
5,667,472	A	9/1997	Finn et al.	
5,713,912	A	2/1998	Porter	
5,782,832	A	7/1998	Larsen et al.	
5,865,848	A	2/1999	Baker	
5,888,223	A	3/1999	Bray, Jr.	
5,916,224	A	6/1999	Esplin	
5,951,574	A	9/1999	Stefanchik et al.	
5,960,522	A	10/1999	Boe	
5,968,054	A	10/1999	Yeatts et al.	
5,976,136	A	11/1999	Bailey et al.	
6,126,689	A	10/2000	Brett	
6,224,602	B1	5/2001	Hayes	
6,235,034	B1	5/2001	Bray	
6,322,562	B1	11/2001	Wolter	
6,342,074	B1 *	1/2002	Simpson	623/17.11
6,368,350	B1	4/2002	Erickson et al.	
6,375,682	B1	4/2002	Fleischmann et al.	
6,419,704	B1	7/2002	Ferree	
6,432,106	B1 *	8/2002	Fraser	623/17.11
6,454,807	B1	9/2002	Jackson	
6,458,159	B1	10/2002	Thalgott	
6,527,804	B1	3/2003	Gauchet et al.	
6,533,818	B1	3/2003	Weber et al.	
6,558,423	B1 *	5/2003	Michelson	623/17.11
6,572,653	B1	6/2003	Simonson	
6,579,318	B2	6/2003	Varga et al.	
6,582,468	B1	6/2003	Gauchet	
6,613,055	B2	9/2003	Di Emidio	
6,629,998	B1 *	10/2003	Lin	623/17.11
6,641,614	B1	11/2003	Wagner et al.	
6,655,243	B2	12/2003	Anderson et al.	
6,716,247	B2	4/2004	Michelson	
6,719,794	B2	4/2004	Gerber	
6,723,126	B1	4/2004	Berry	
6,733,532	B1	5/2004	Gauchet et al.	
6,764,491	B2	7/2004	Frey et al.	
6,770,094	B2	8/2004	Fehling et al.	
6,824,564	B2 *	11/2004	Crozet	623/17.11
6,852,117	B2	2/2005	Orlowski	
6,890,355	B2	5/2005	Michelson	
6,904,308	B2	6/2005	Frisch et al.	
6,953,477	B2	10/2005	Berry	
6,955,671	B2	10/2005	Uchikubo	
6,962,606	B2	11/2005	Michelson	
6,972,019	B2 *	12/2005	Michelson	606/86 A
6,974,480	B2	12/2005	Messerli et al.	
7,030,904	B2	4/2006	Adair et al.	
7,033,394	B2 *	4/2006	Michelson	623/17.11
7,037,258	B2	5/2006	Chatenever et al.	
7,077,864	B2	7/2006	Byrd, III et al.	
7,097,615	B2	8/2006	Banik et al.	
7,135,043	B2	11/2006	Nakahara et al.	
7,211,112	B2	5/2007	Baynham et al.	
7,232,464	B2	6/2007	Mathieu et al.	
7,238,203	B2	7/2007	Bagga et al.	
7,326,248	B2 *	2/2008	Michelson	623/17.11
7,442,209	B2 *	10/2008	Michelson	623/17.11
7,442,299	B2	10/2008	Lee et al.	
7,615,059	B2	11/2009	Watschke et al.	
7,618,456	B2	11/2009	Mathieu et al.	

(56) **References Cited**

U.S. PATENT DOCUMENTS

7,628,816 B2 12/2009 Magerl et al.
7,704,279 B2 4/2010 Moskowitz et al.
7,727,246 B2 6/2010 Sixto et al.
7,758,617 B2 7/2010 Lott et al.
7,776,047 B2 8/2010 Fanger et al.
7,776,093 B2 8/2010 Wolek et al.
7,803,162 B2 9/2010 Marnay et al.
7,846,207 B2 12/2010 Lechmann et al.
7,862,616 B2 1/2011 Lechmann et al.
7,875,076 B2 1/2011 Mathieu et al.
7,887,591 B2 2/2011 Aebi et al.
7,942,903 B2 5/2011 Moskowitz et al.
7,959,675 B2 6/2011 Gately
7,972,363 B2 * 7/2011 Moskowitz et al. 606/246
7,985,255 B2 7/2011 Bray et al.
8,029,512 B2 10/2011 Paltzer
8,034,060 B2 10/2011 Keren et al.
8,105,367 B2 1/2012 Austin et al.
8,114,162 B1 2/2012 Bradley
8,137,405 B2 3/2012 Kostuik et al.
8,167,949 B2 5/2012 Tyber et al.
8,268,000 B2 9/2012 Waugh et al.
8,273,127 B2 9/2012 Jones et al.
8,328,851 B2 12/2012 Curran
8,328,872 B2 12/2012 Duffield et al.
8,353,913 B2 1/2013 Moskowitz et al.
8,403,986 B2 3/2013 Michelson
8,414,651 B2 4/2013 Tyber et al.
8,419,797 B2 4/2013 Biedermann et al.
8,425,607 B2 4/2013 Waugh et al.
8,540,774 B2 9/2013 Kueenzi et al.
8,613,761 B2 12/2013 Lindemann et al.
8,728,165 B2 5/2014 Parry et al.
8,790,405 B2 7/2014 Biedermann et al.
8,882,813 B2 11/2014 Jones et al.
2002/0068977 A1 6/2002 Jackson
2002/0143338 A1 10/2002 Orbay et al.
2003/0130737 A1 7/2003 McGahan et al.
2004/0088054 A1 5/2004 Berry
2004/0177531 A1 9/2004 DiBenedetto et al.
2004/0186482 A1 9/2004 Kolb et al.
2004/0186569 A1 9/2004 Berry
2004/0193272 A1 9/2004 Zubok et al.
2004/0220571 A1 11/2004 Assaker et al.
2004/0254644 A1 12/2004 Taylor
2005/0027362 A1 2/2005 Williams et al.
2005/0049590 A1 3/2005 Alleyne et al.
2005/0177235 A1 8/2005 Baynham et al.
2005/0216084 A1 9/2005 Fleischmann
2005/0256576 A1 11/2005 Moskowitz et al.
2005/0261769 A1 11/2005 Moskowitz et al.
2005/0273170 A1 12/2005 Navarro et al.
2005/0278026 A1 12/2005 Gordon et al.
2006/0155285 A1 7/2006 Anderson
2006/0241621 A1 10/2006 Moskowitz et al.
2007/0049943 A1 3/2007 Moskowitz et al.
2007/0167678 A1 7/2007 Moskowitz et al.
2007/0198089 A1 8/2007 Moskowitz et al.
2007/0213820 A1 9/2007 Magerl et al.
2007/0250167 A1 10/2007 Bray et al.
2007/0250172 A1 10/2007 Moskowitz et al.
2007/0276498 A1 11/2007 Aebi et al.
2008/0033440 A1 2/2008 Moskowitz et al.
2008/0177307 A1 7/2008 Moskowitz et al.
2008/0183293 A1 7/2008 Parry et al.
2008/0249569 A1 10/2008 Waugh et al.
2008/0249575 A1 * 10/2008 Waugh A61F 2/447
606/305
2008/0249625 A1 10/2008 Waugh et al.
2008/0281424 A1 11/2008 Parry et al.
2008/0281425 A1 11/2008 Thalgott et al.
2009/0030520 A1 1/2009 Biedermann et al.
2009/0080997 A1 * 3/2009 Johnson A61B 17/8047
411/347
2009/0105830 A1 4/2009 Jones et al.
2009/0105831 A1 4/2009 Jones et al.
2009/0112271 A1 4/2009 Moskowitz et al.
2009/0182430 A1 7/2009 Tyber et al.
2009/0187218 A1 7/2009 Schaffhausen
2009/0210062 A1 8/2009 Thalgott et al.
2009/0224023 A1 9/2009 Moskowitz et al.
2009/0234455 A1 9/2009 Moskowitz et al.
2010/0145460 A1 6/2010 McDonough et al.
2010/0305704 A1 * 12/2010 Messerli A61F 2/442
623/17.16
2010/0324606 A1 12/2010 Moskowitz et al.
2011/0125269 A1 5/2011 Moskowitz et al.
2011/0137349 A1 6/2011 Moskowitz et al.
2011/0178600 A1 7/2011 Moskowitz et al.
2011/0208312 A1 8/2011 Moskowitz et al.
2011/0288646 A1 11/2011 Moskowitz et al.
2011/0295327 A1 12/2011 Moskowitz et al.
2011/0295371 A1 12/2011 Moskowitz et al.
2011/0307011 A1 12/2011 Moskowitz et al.
2011/0319935 A1 12/2011 Moskowitz et al.
2012/0010714 A1 1/2012 Moskowitz et al.
2012/0271423 A1 10/2012 Wallenstein et al.
2012/0277870 A1 11/2012 Wolters et al.
2012/0323330 A1 12/2012 Kueenzi et al.
2012/0330419 A1 12/2012 Moskowitz et al.
2013/0018469 A1 1/2013 Moskowitz et al.
2013/0018470 A1 1/2013 Moskowitz et al.
2013/0023991 A1 1/2013 Moskowitz et al.
2013/0023992 A1 1/2013 Moskowitz et al.
2013/0053962 A1 2/2013 Moskowitz et al.
2013/0060339 A1 3/2013 Duffield et al.
2013/0073044 A1 3/2013 Gamache
2013/0173002 A1 7/2013 Moskowitz et al.
2013/0282017 A1 10/2013 Moskowitz et al.
2014/0249629 A1 9/2014 Moskowitz et al.
2015/0025637 A1 1/2015 Moskowitz et al.
2015/0105824 A1 4/2015 Moskowitz et al.
2015/0148847 A1 5/2015 Moskowitz et al.
2016/0374830 A1 12/2016 Moskowitz et al.
2017/0252178 A1 9/2017 Moskowitz et al.

FOREIGN PATENT DOCUMENTS

WO 2004093749 A1 11/2004
WO 2006/091503 8/2006
WO 2006091503 A1 8/2006

OTHER PUBLICATIONS

E.K. Wai et al., "Disk Replacement Arthroplasties: Can the Success of Hip and Knee Replacements be Repeated in the Spine?," Seminars in Spine Surgery, vol. 15, No. 4 (Dec.) 2003, pp. 473-482.
Richard D. Guyer et al., "Intervertebral Disc Prostheses," Spine Journal, vol. 28, No. 15S, Supp. To Aug. 1, 2003, pp. S15-S23.
Dieter Grob et al., "Clinical Experience With the Dynesys Semirigid Fixation System for the Lumbar Spine," Spine, vol. 30, No. 3, 2005, pp. 324-331.
International Search Report (ISR) and Written Opinion of the International Searching Authority, Dec. 3, 2007, International Application No. PCT/US 07/05005.
International Search Report (ISR) and Written Opinion of the International Searching Authority, May 21, 2008, International Application No. PCT/US2007/021015.
International Search Report (ISR) and Written Opinion of the International Searching Authority, Jul. 9, 2008, International Application No. PCT/US2007021013.

* cited by examiner

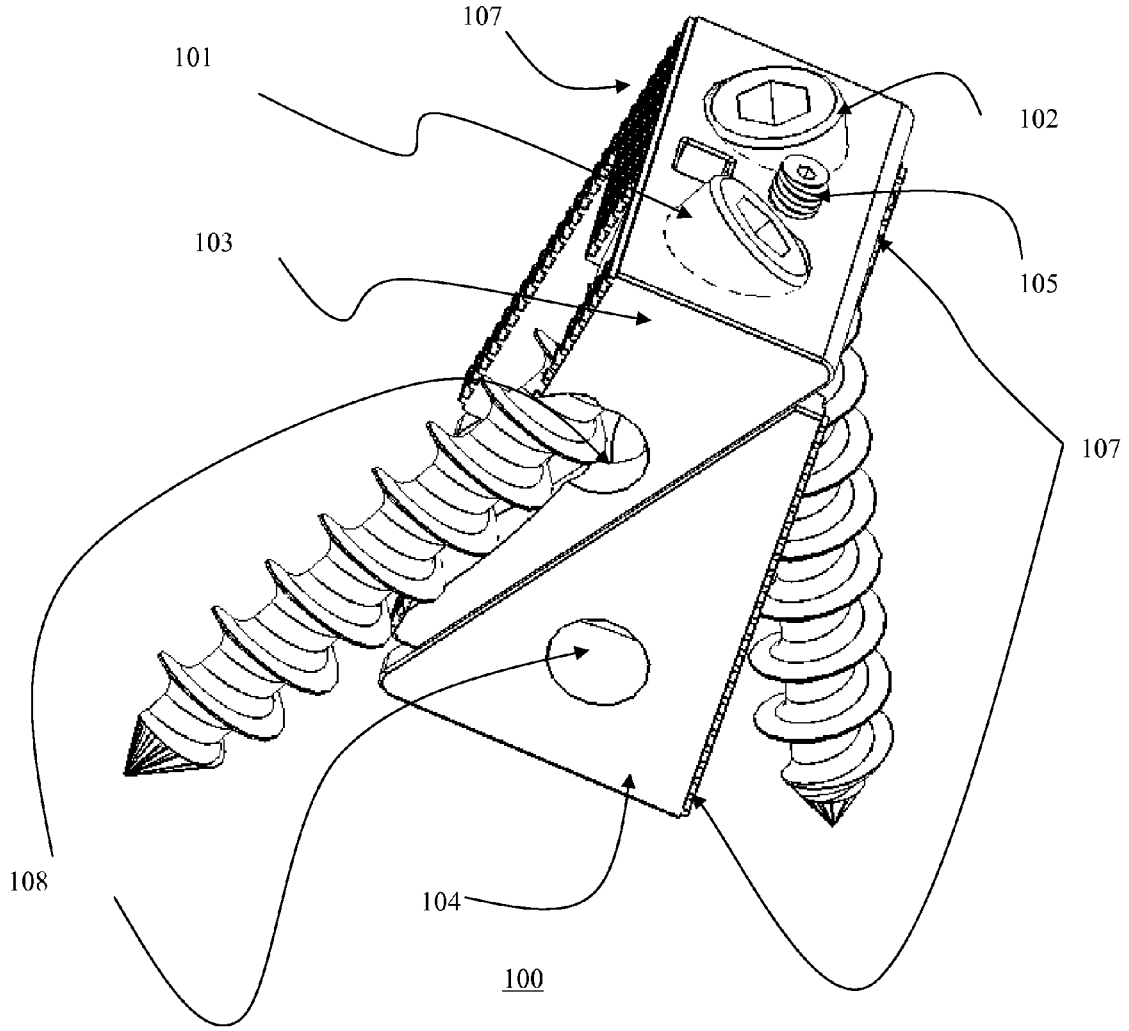

Fig. 1A

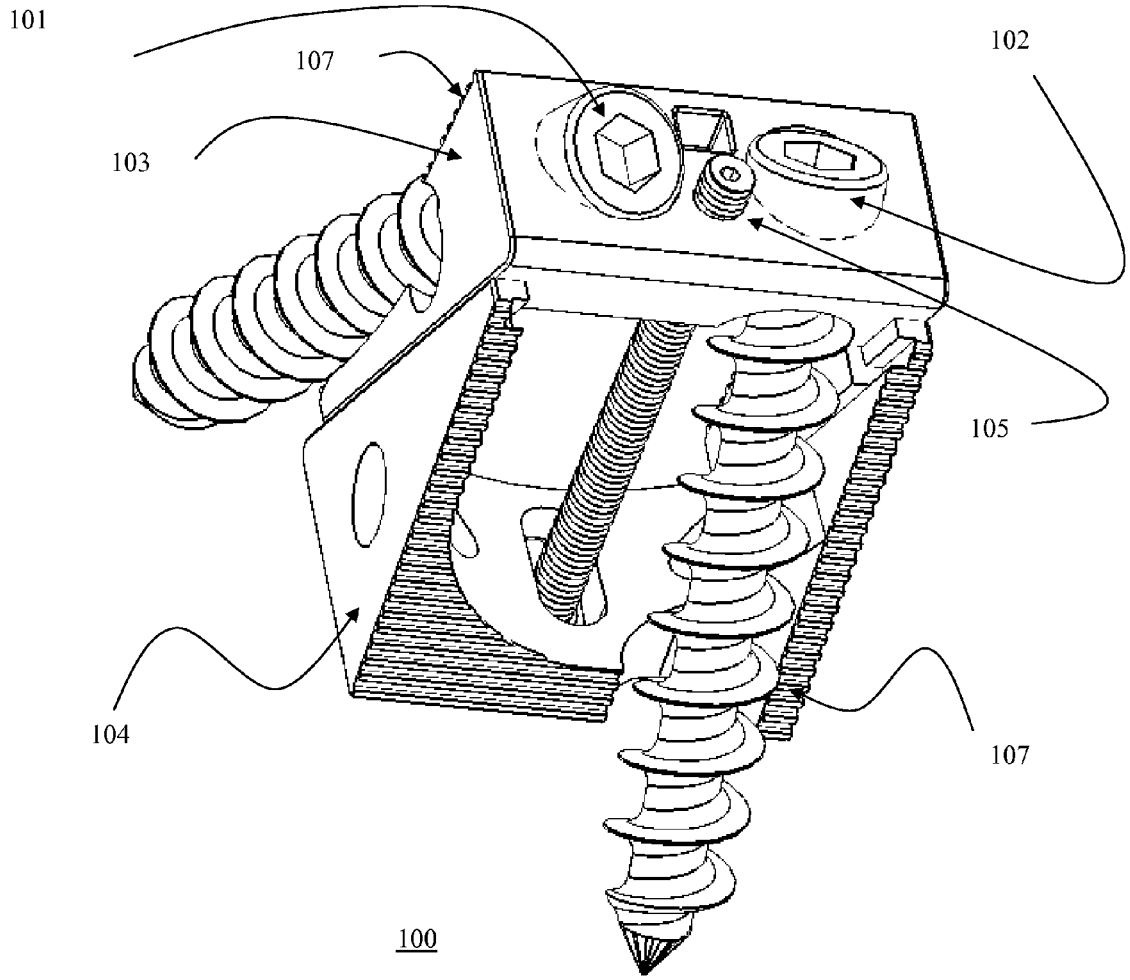

Fig. 1B

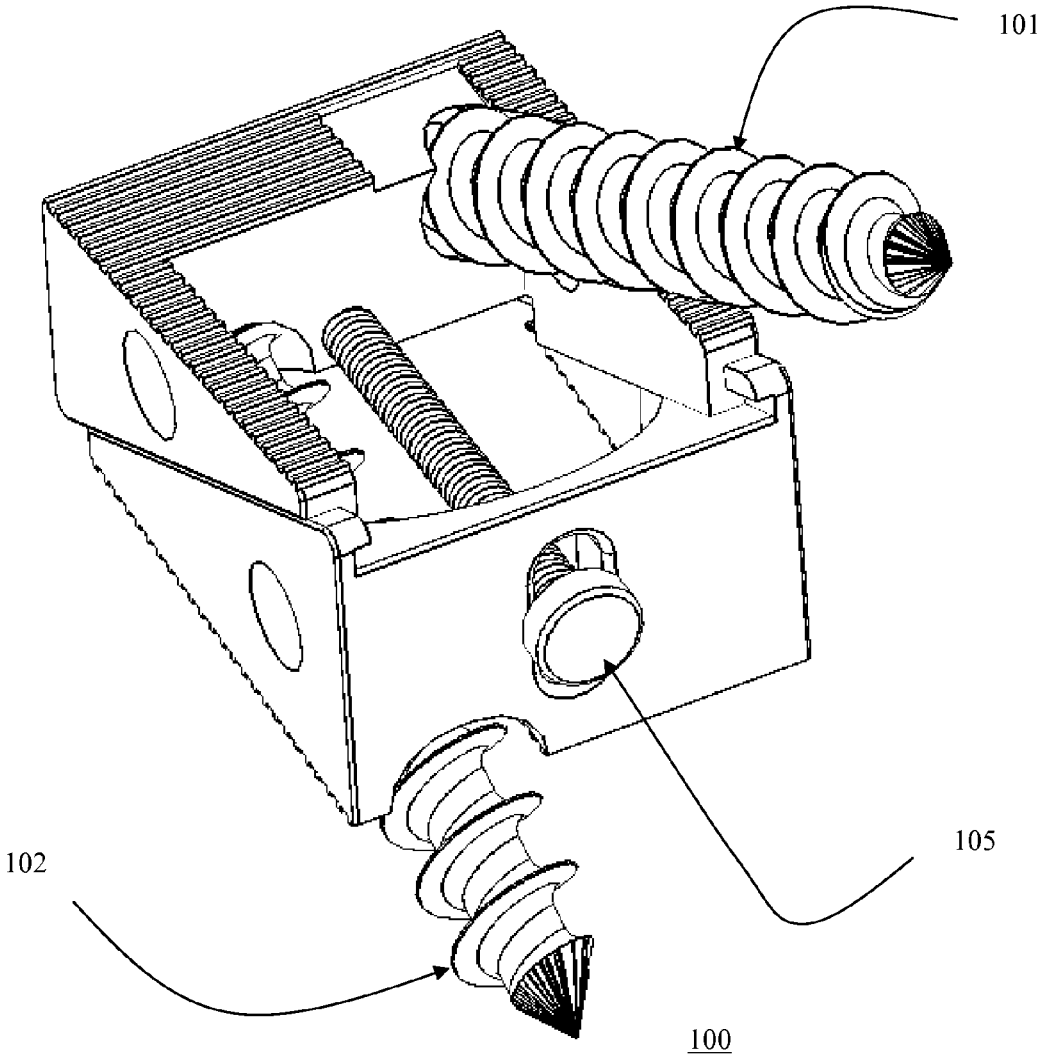

Fig. 1C

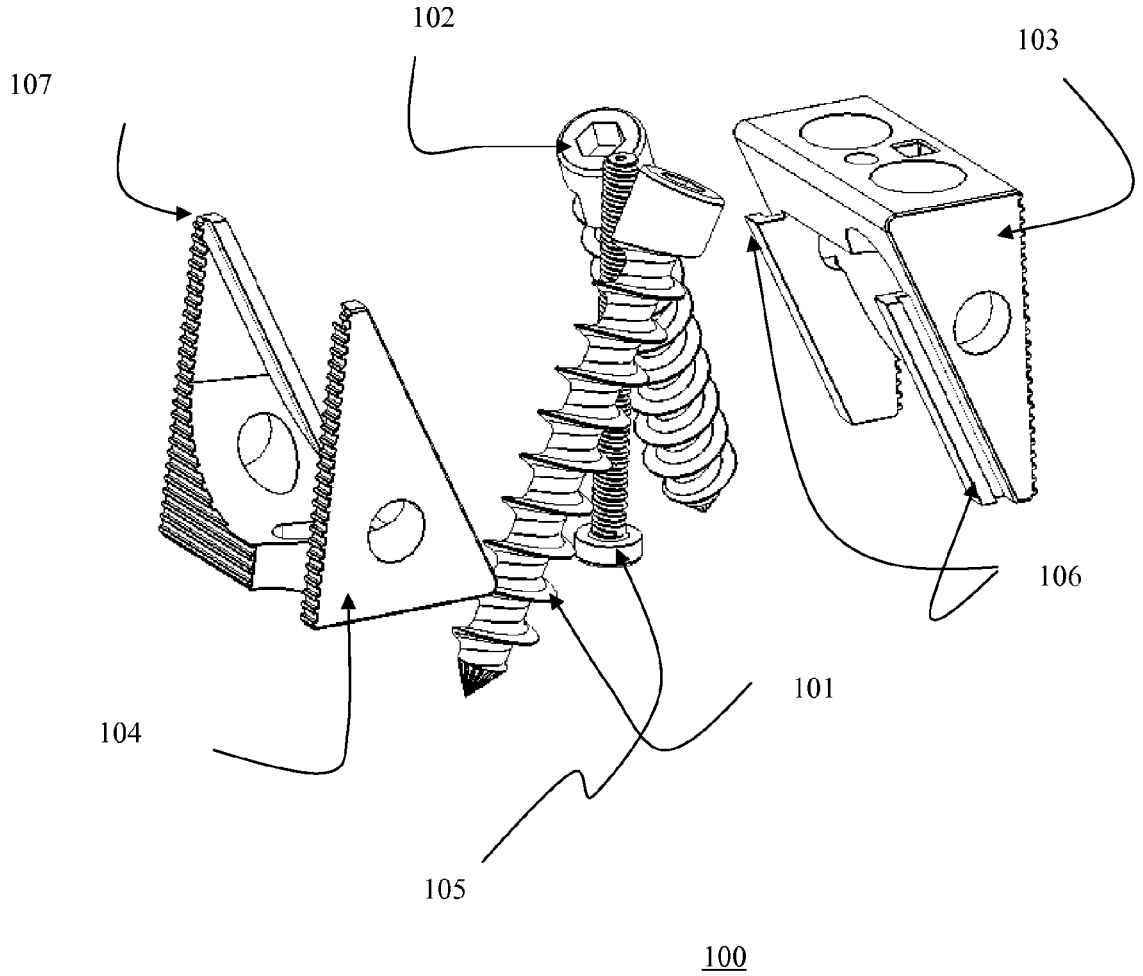

Fig. 1D

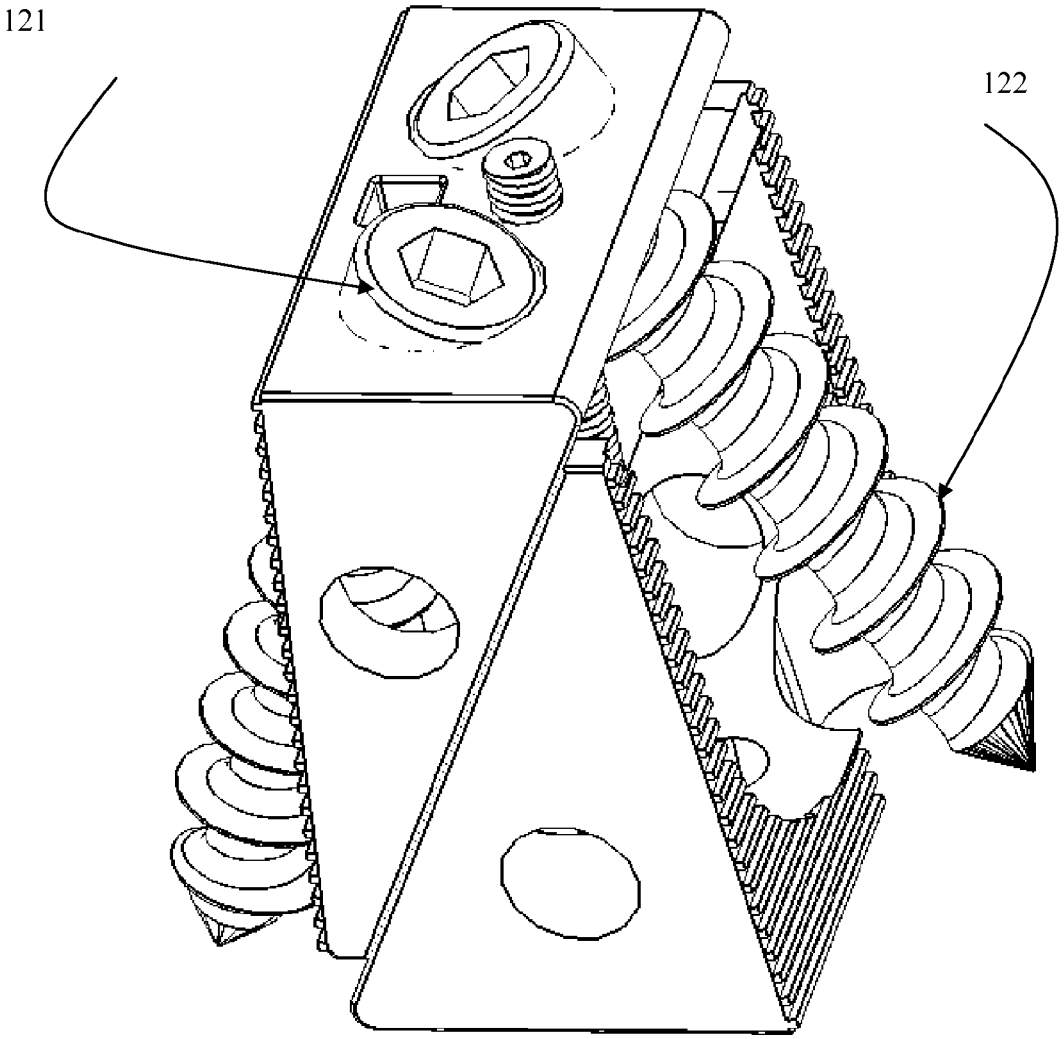

120

Fig. 1E

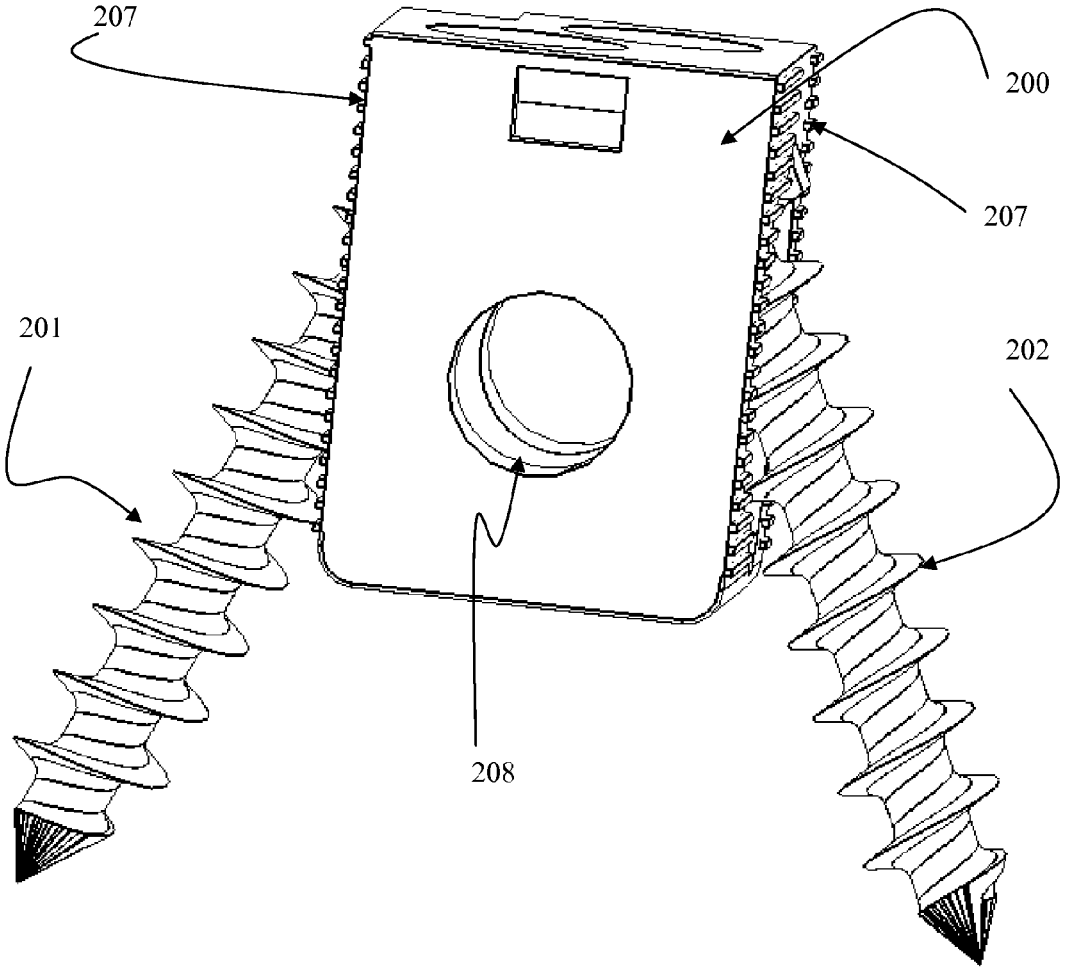

Fig. 2A

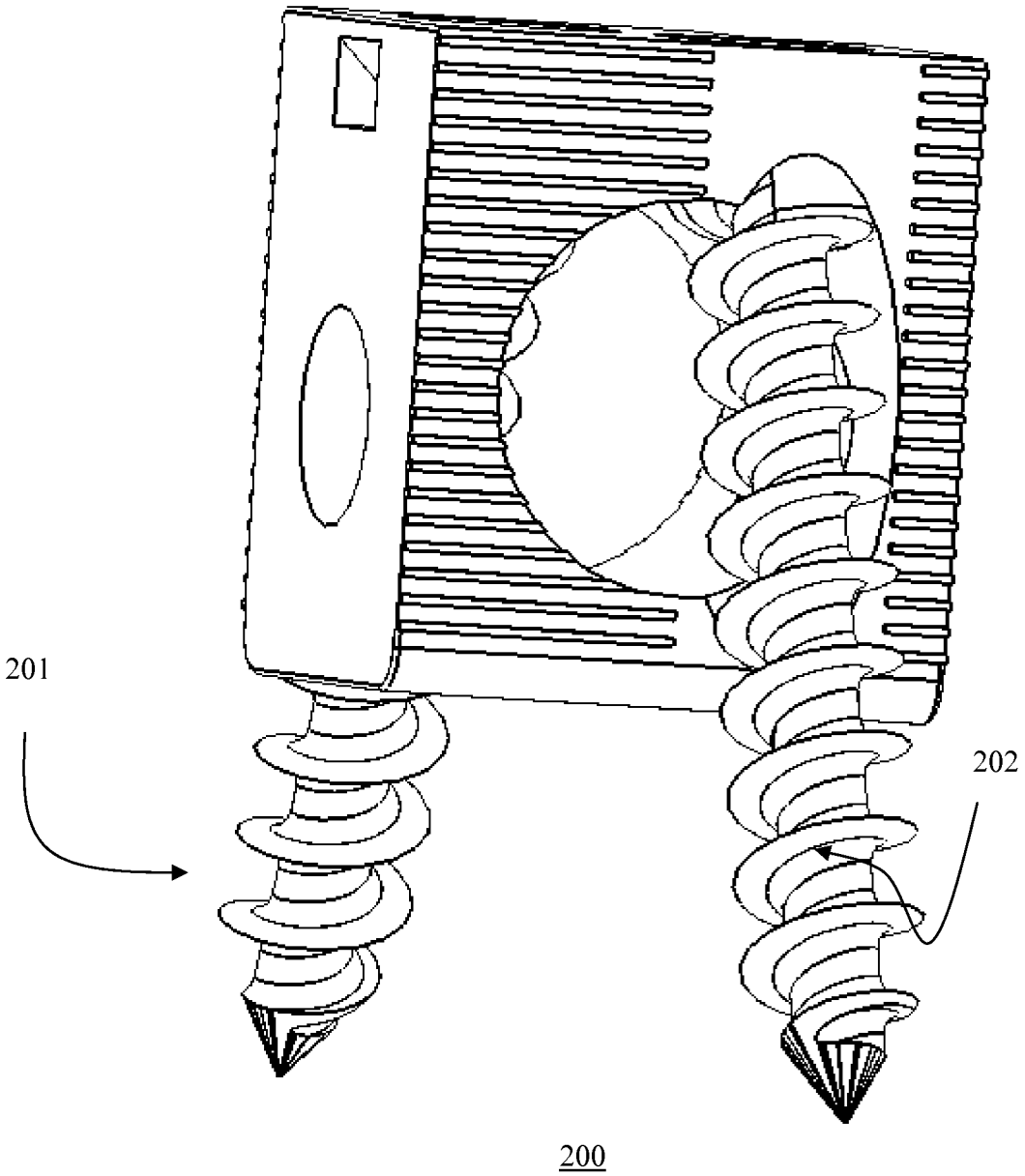

Fig. 2B

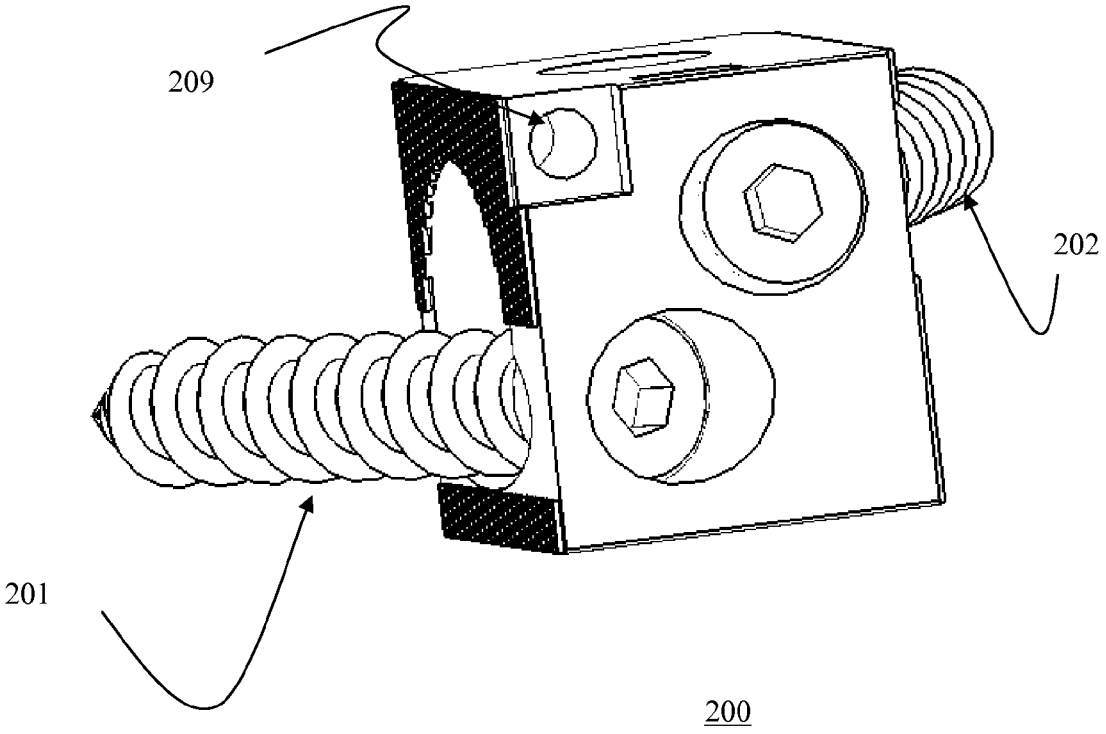

Fig. 2C

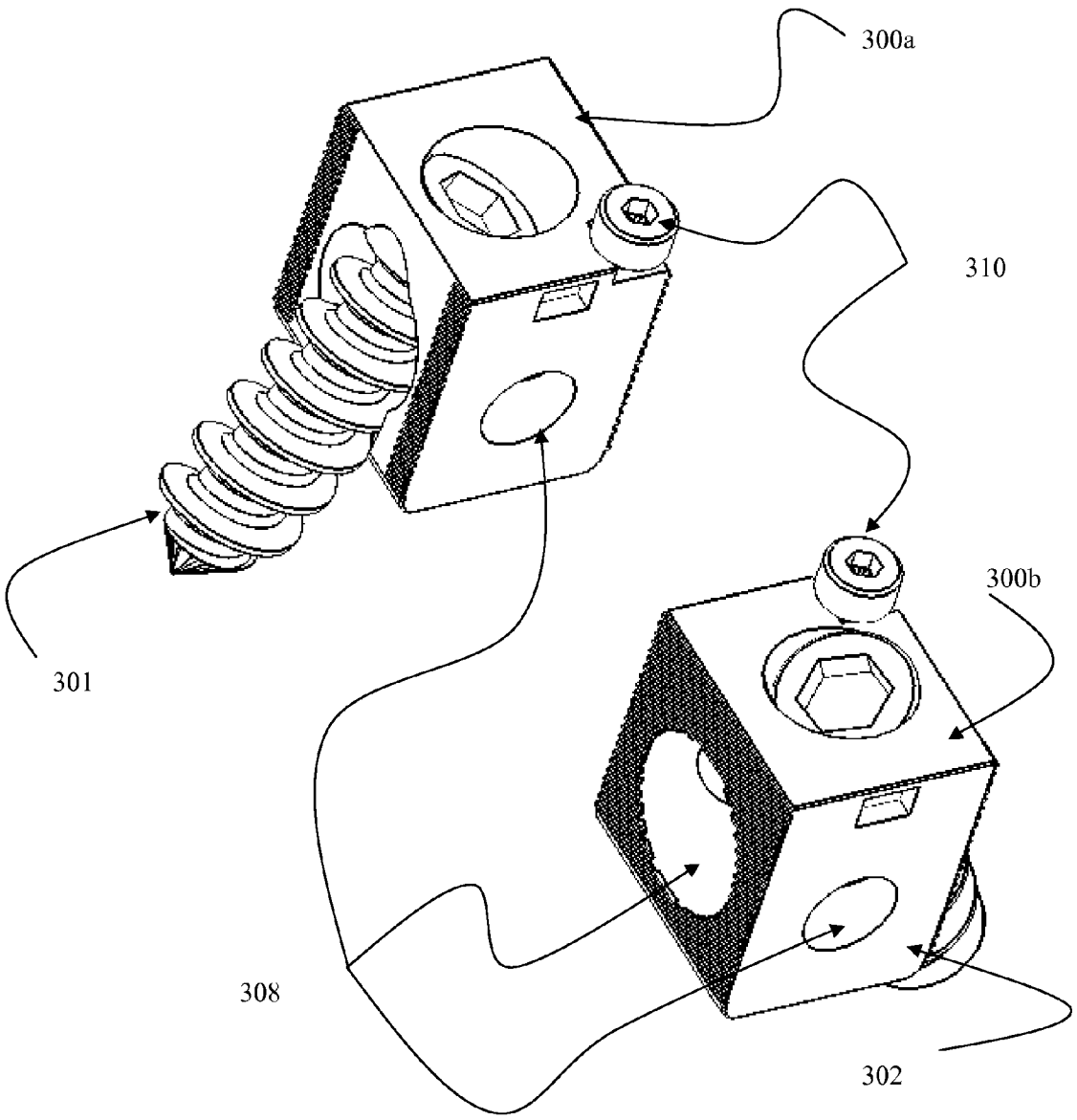

Fig. 3

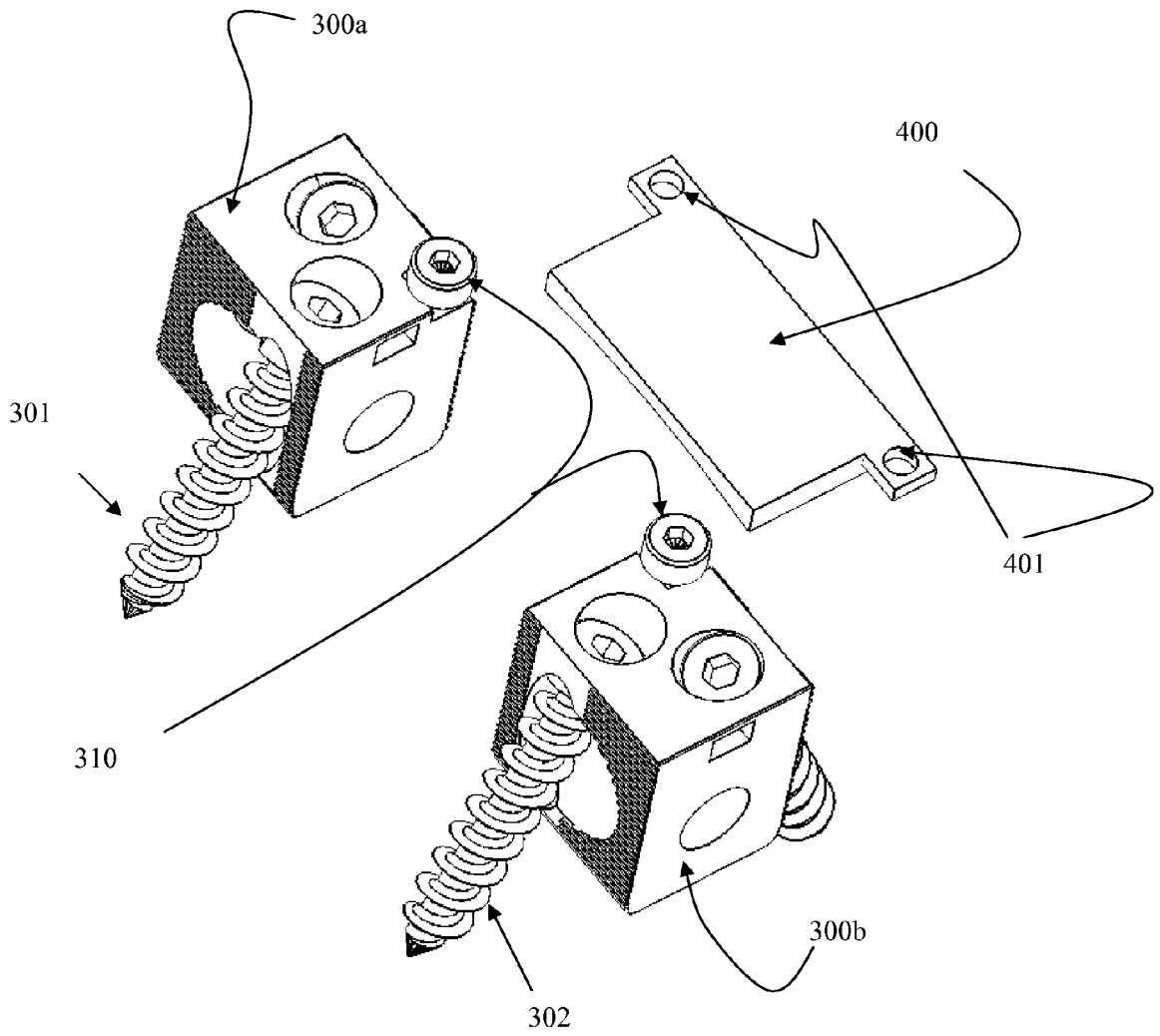

Fig. 4A

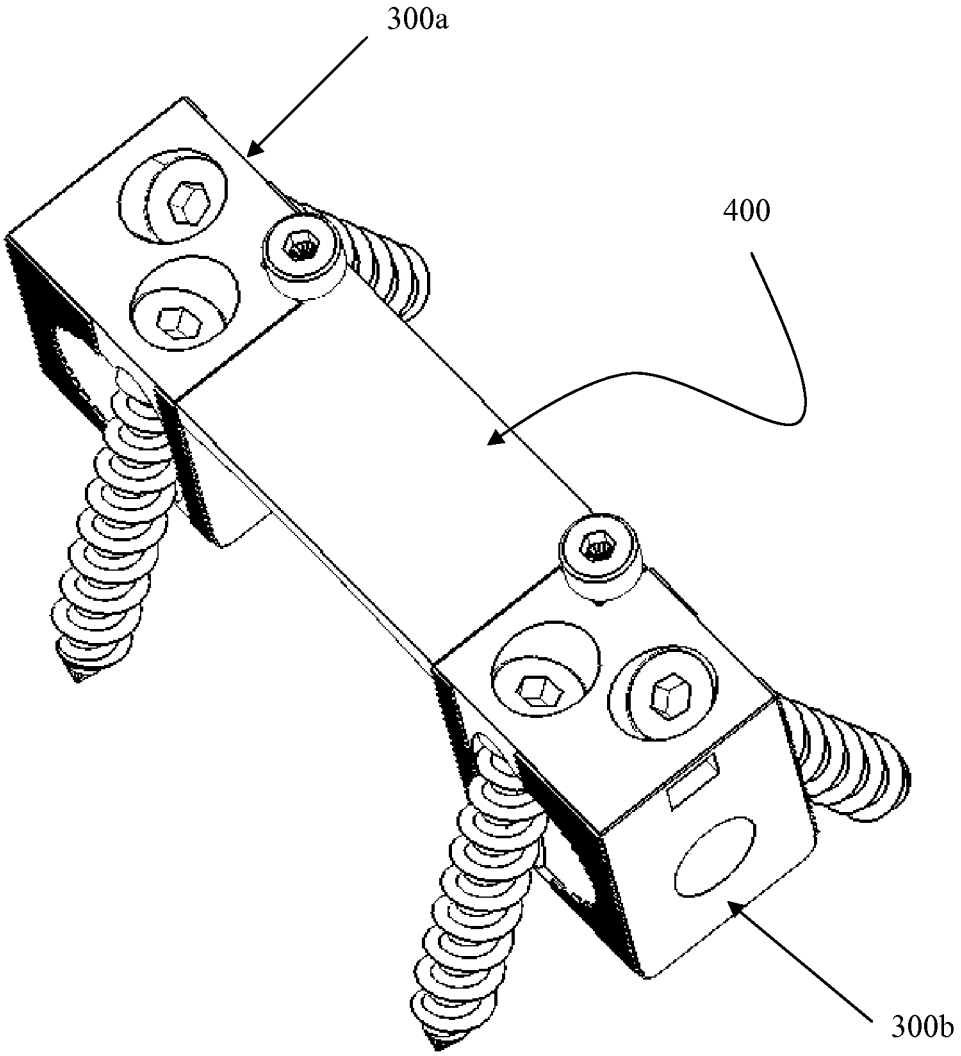

Fig. 4B

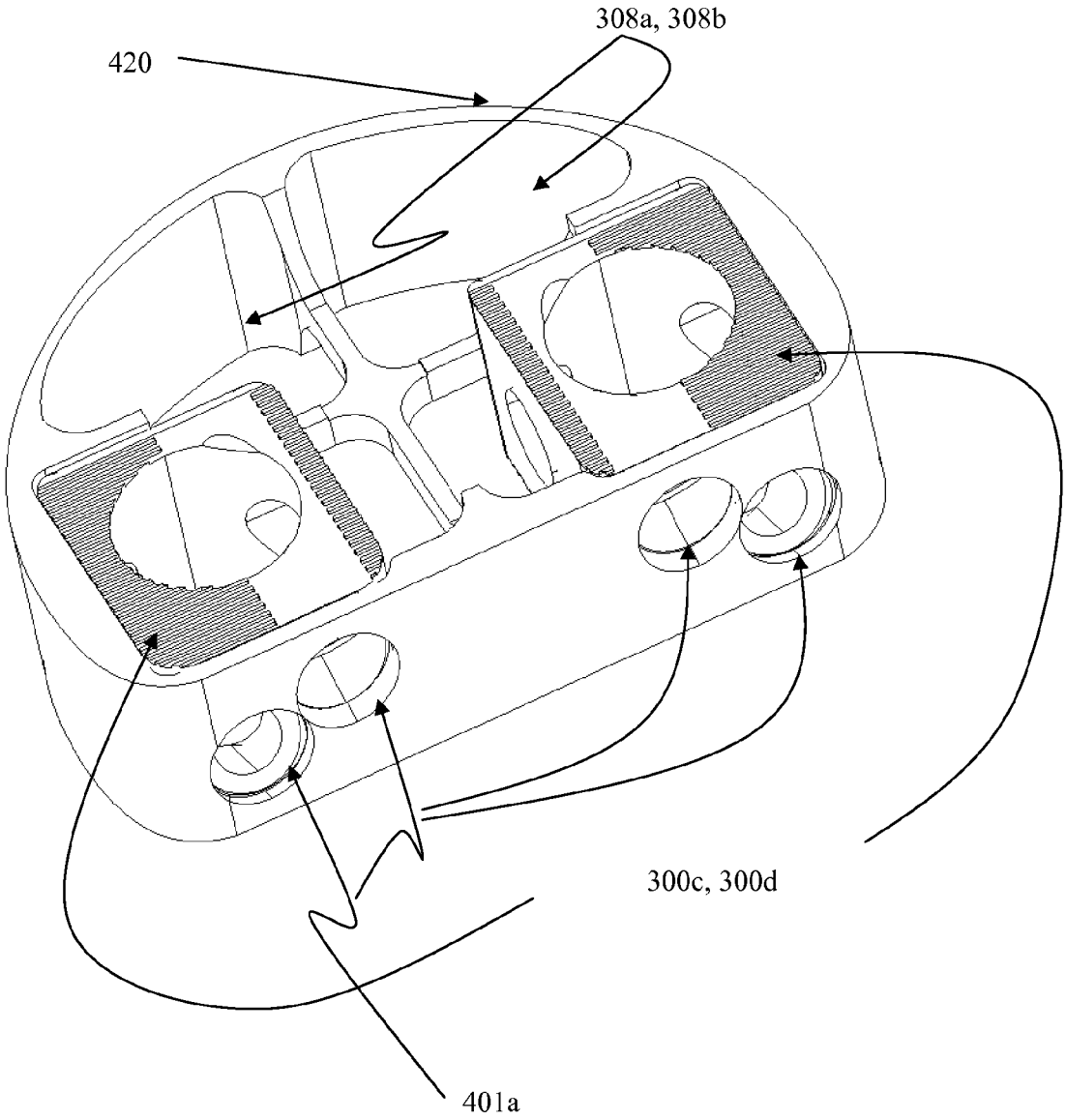

FIG. 4C

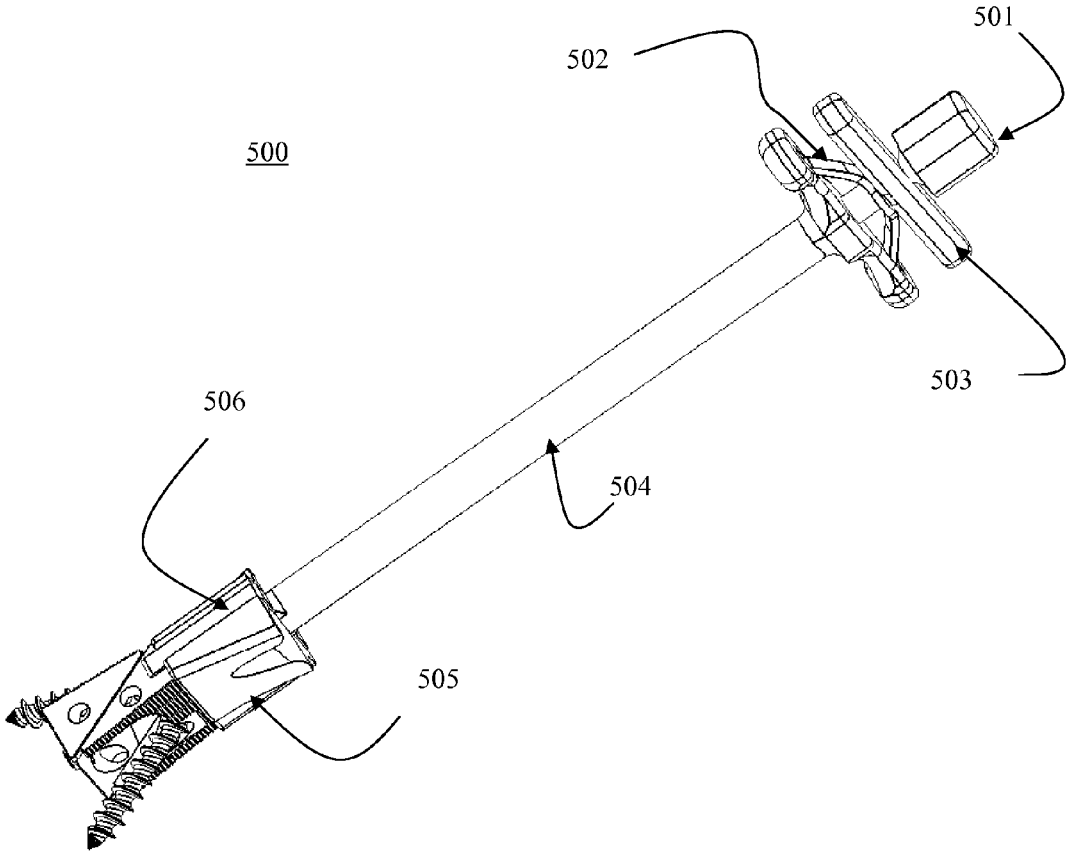

Fig. 5A

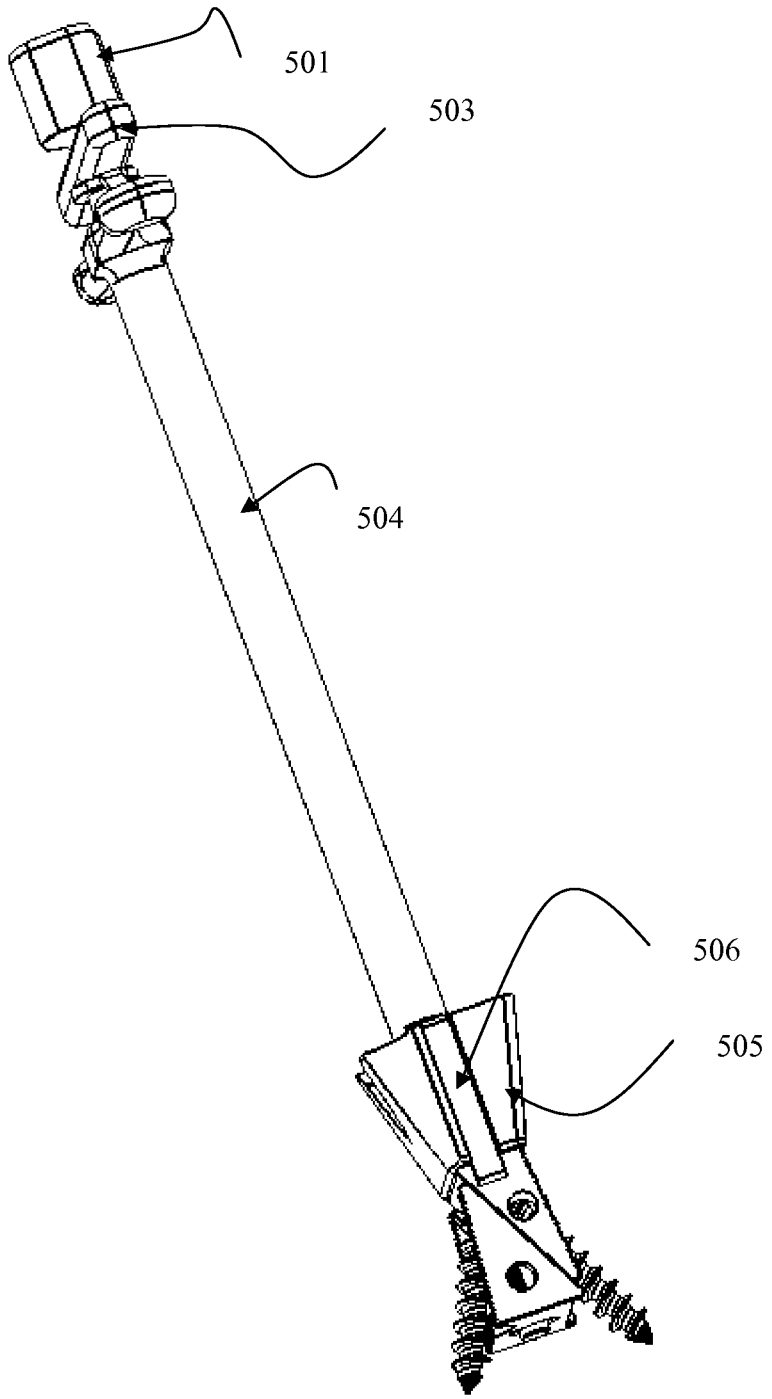

Fig. 5B

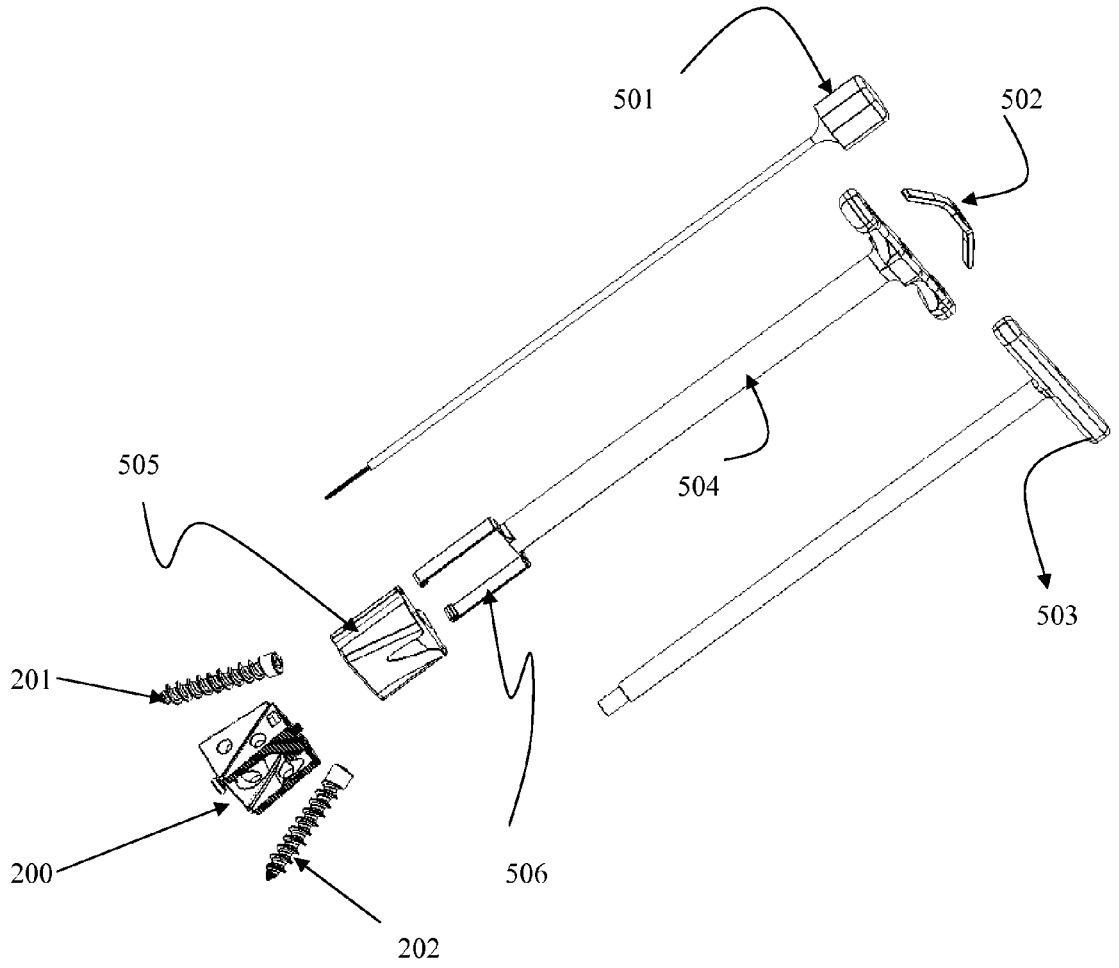

Fig. 5C

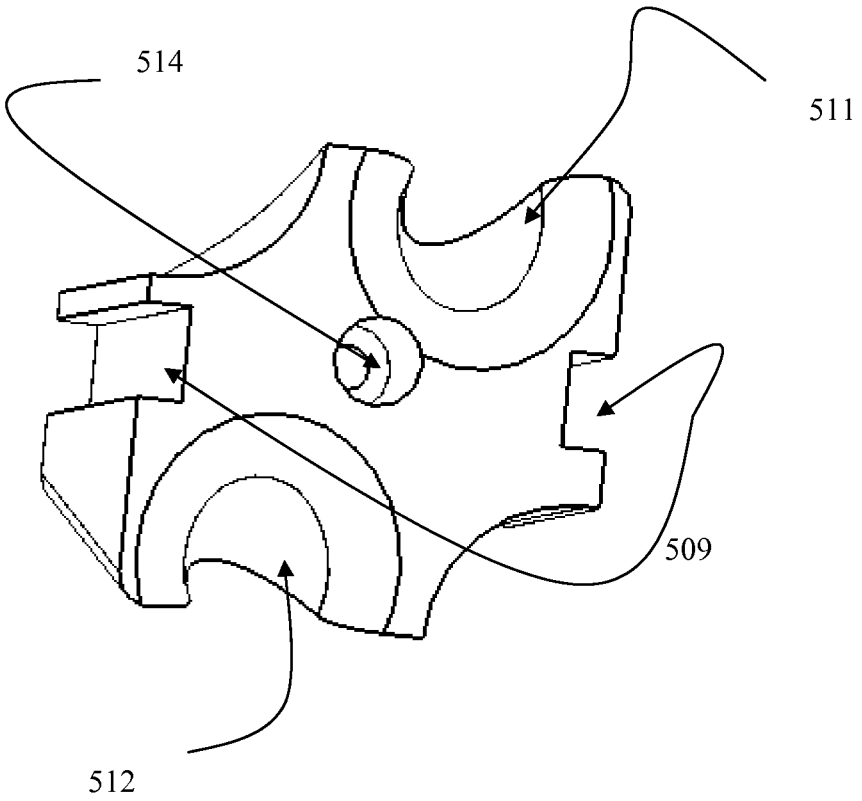

Fig. 5D

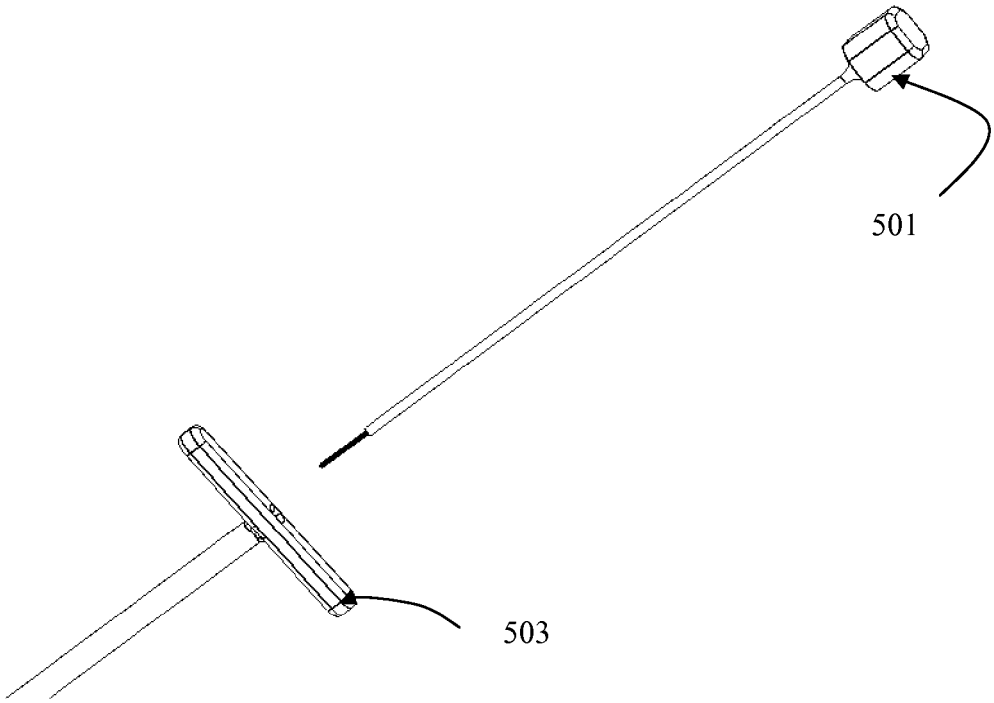

Fig. 5E

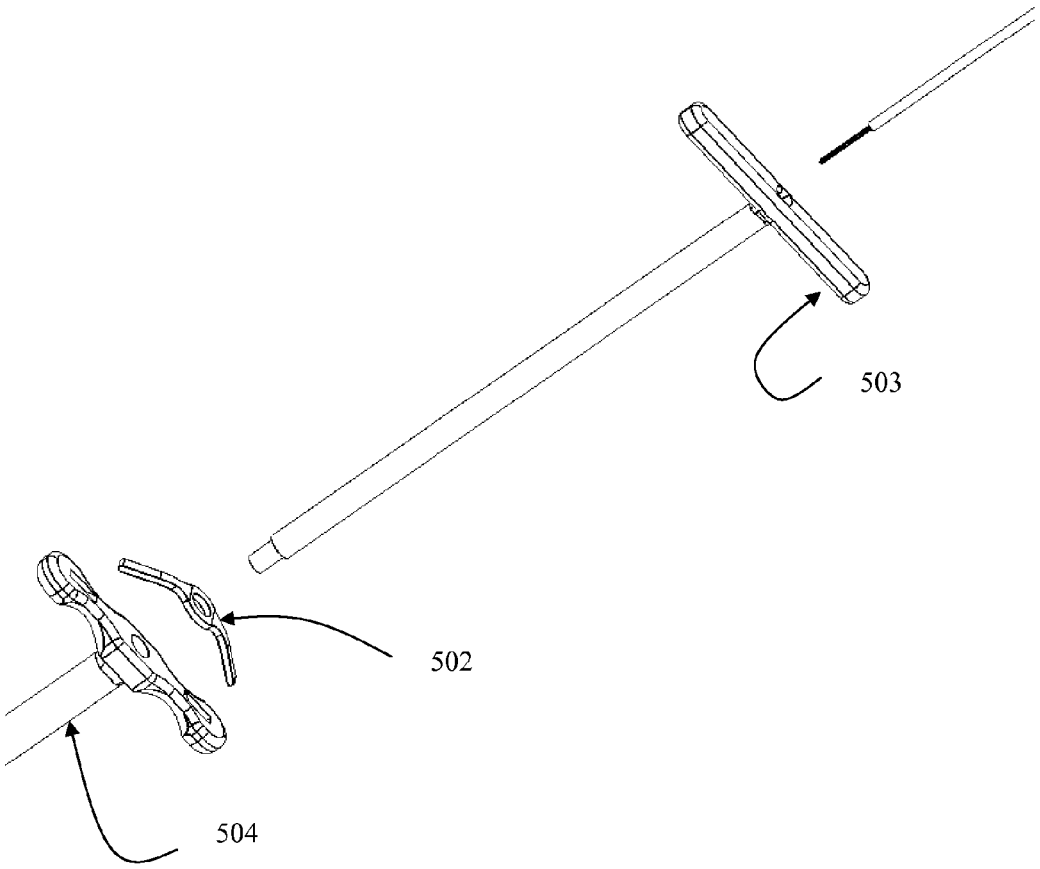

Fig. 5F

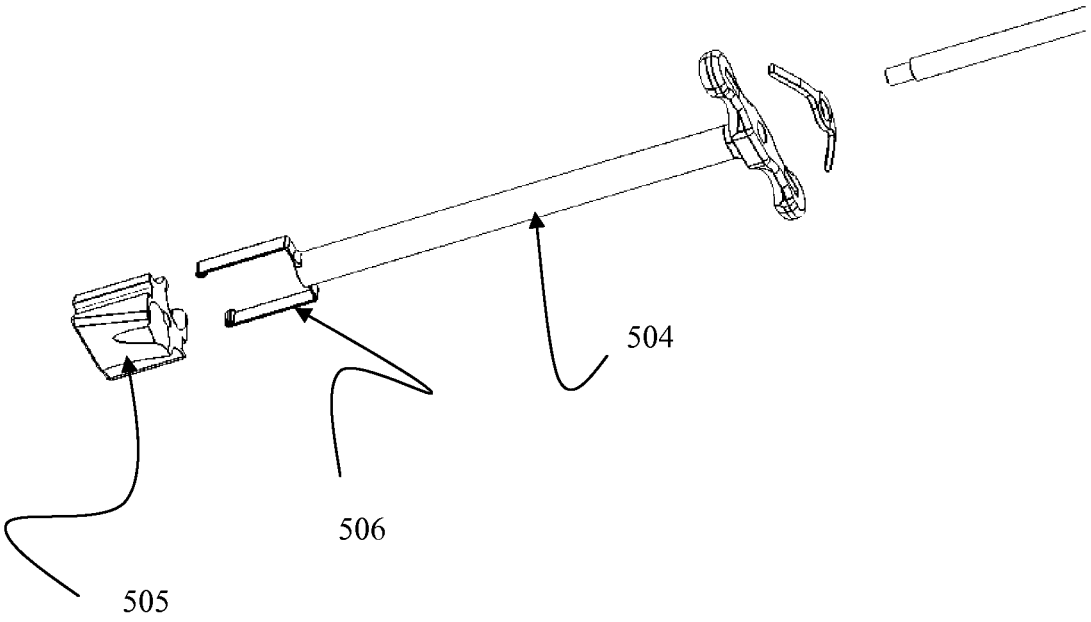

Fig. 5G

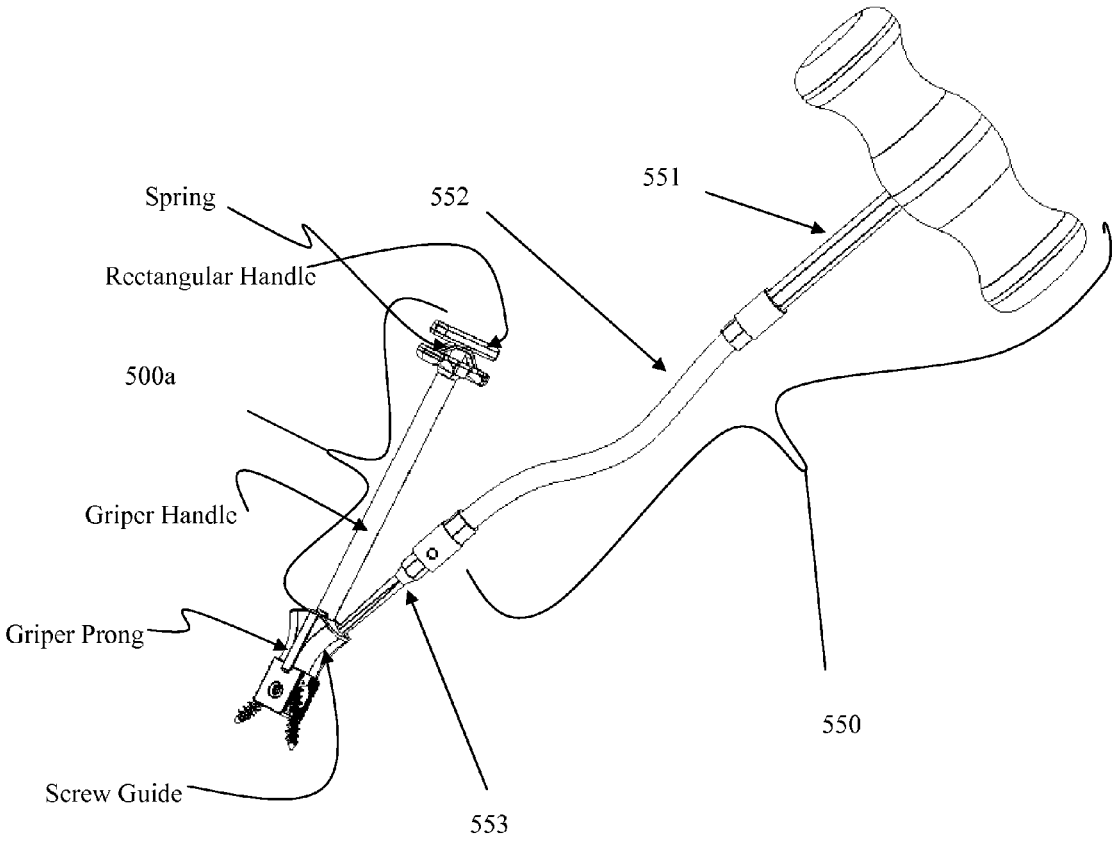
Spring
552
551
Rectangular Handle
500a
Griper Handle
Griper Prong
550
Screw Guide
553

FIG. 5H

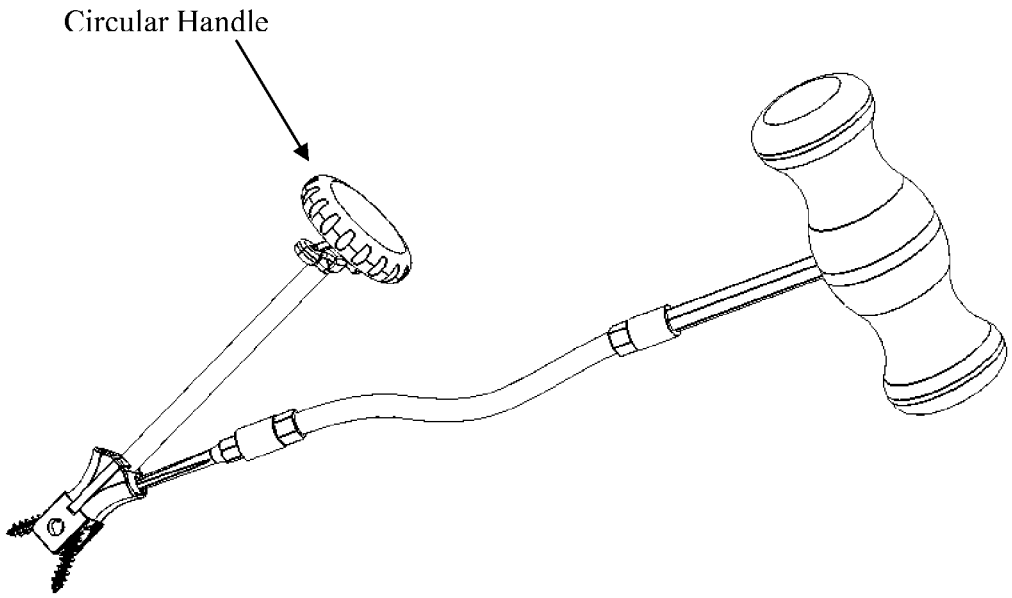

FIG. 5I

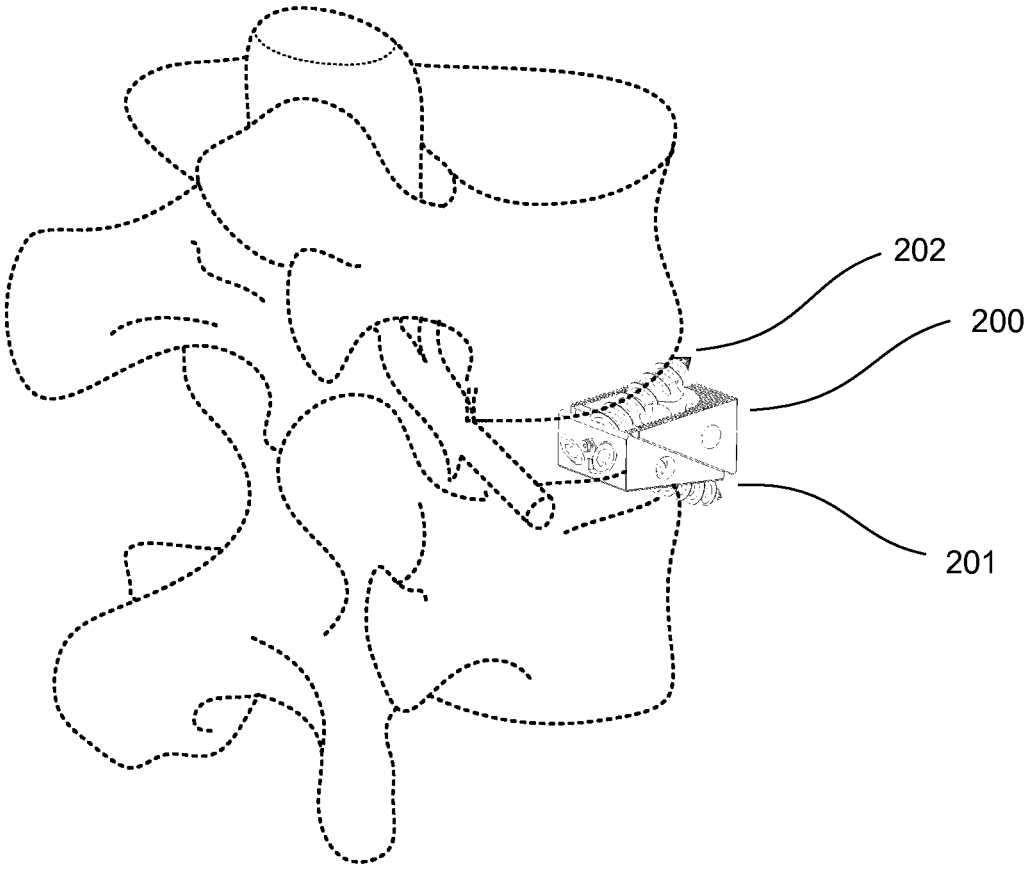

Fig. 6A

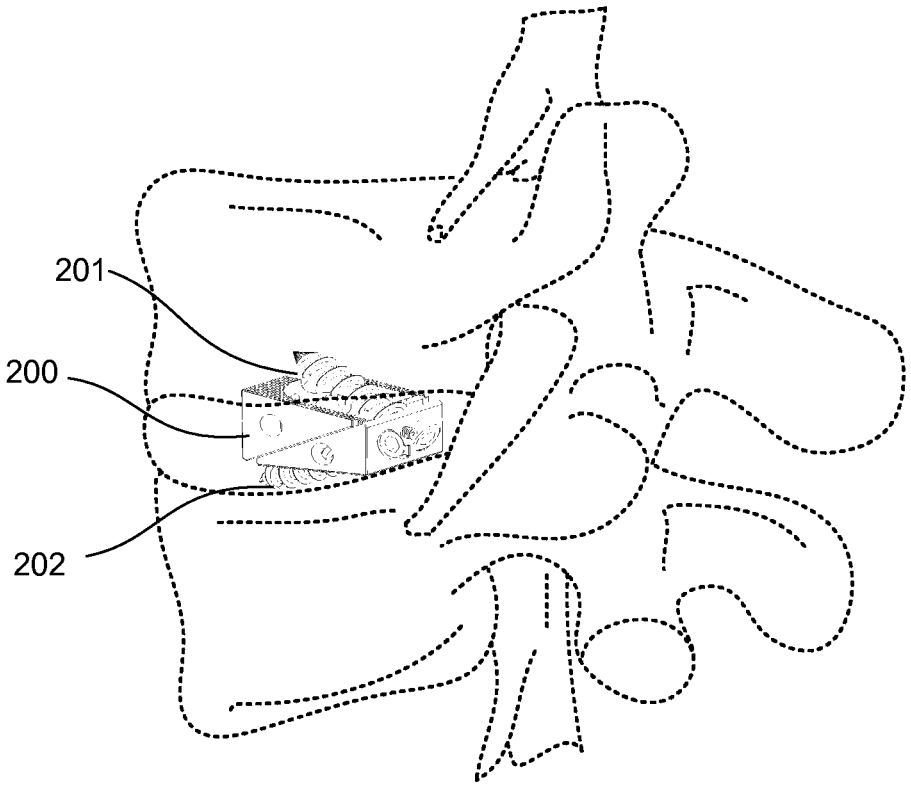

Fig. 6B

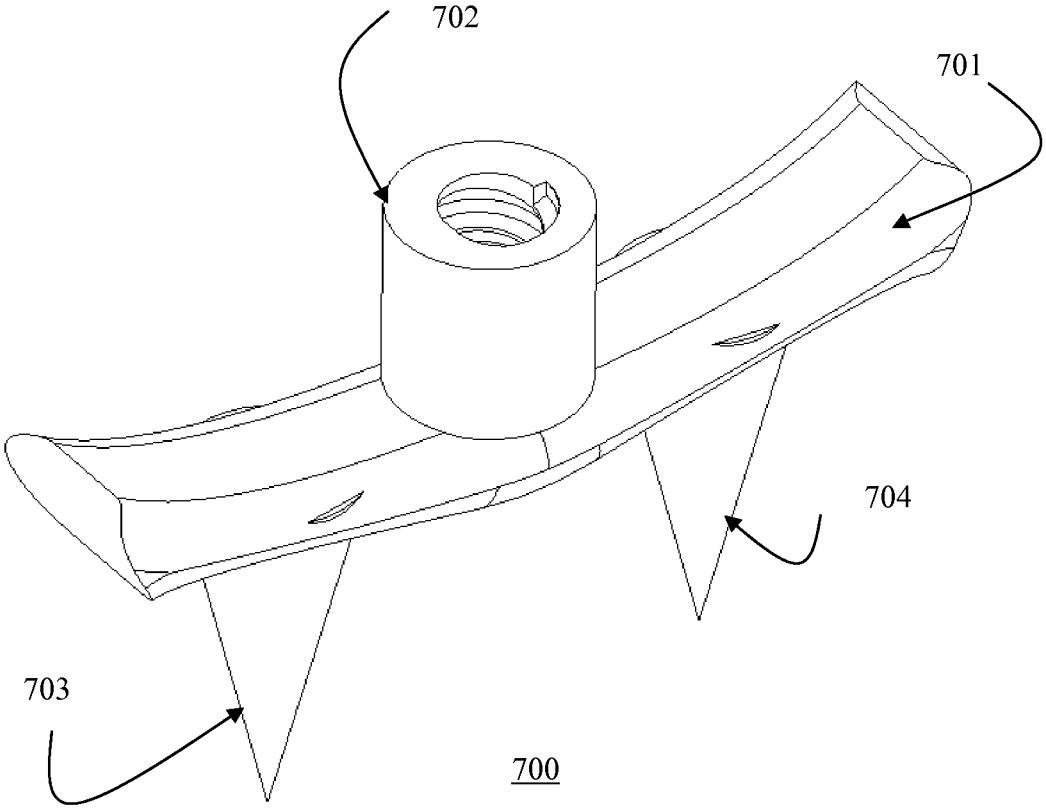

Fig. 7A

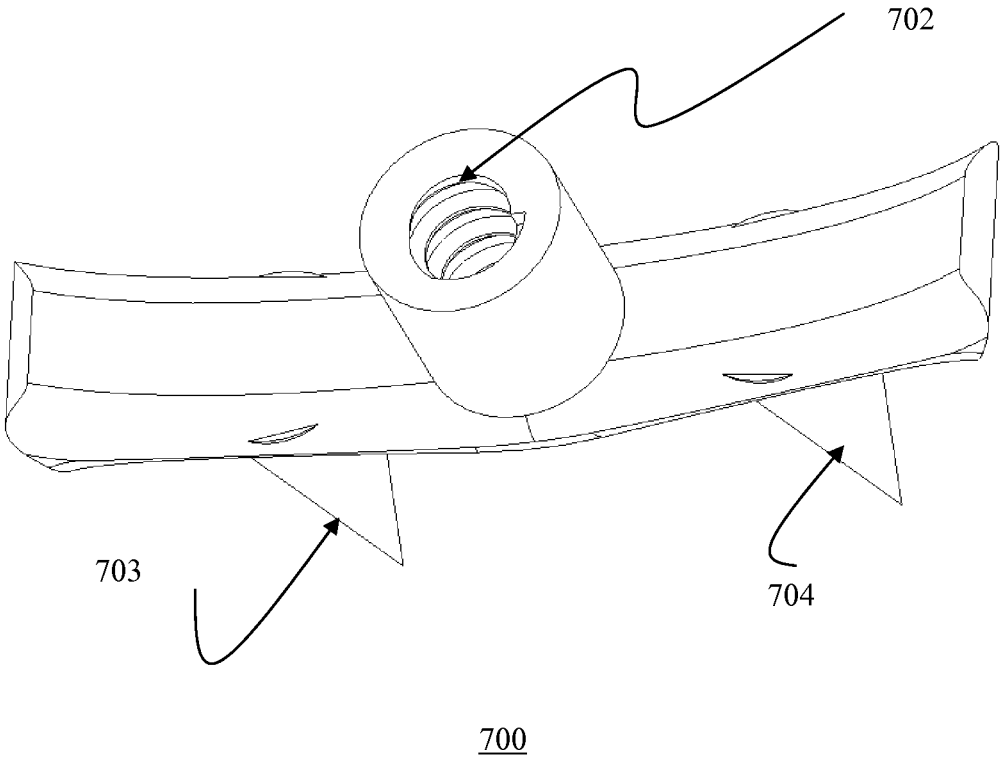

Fig. 7B

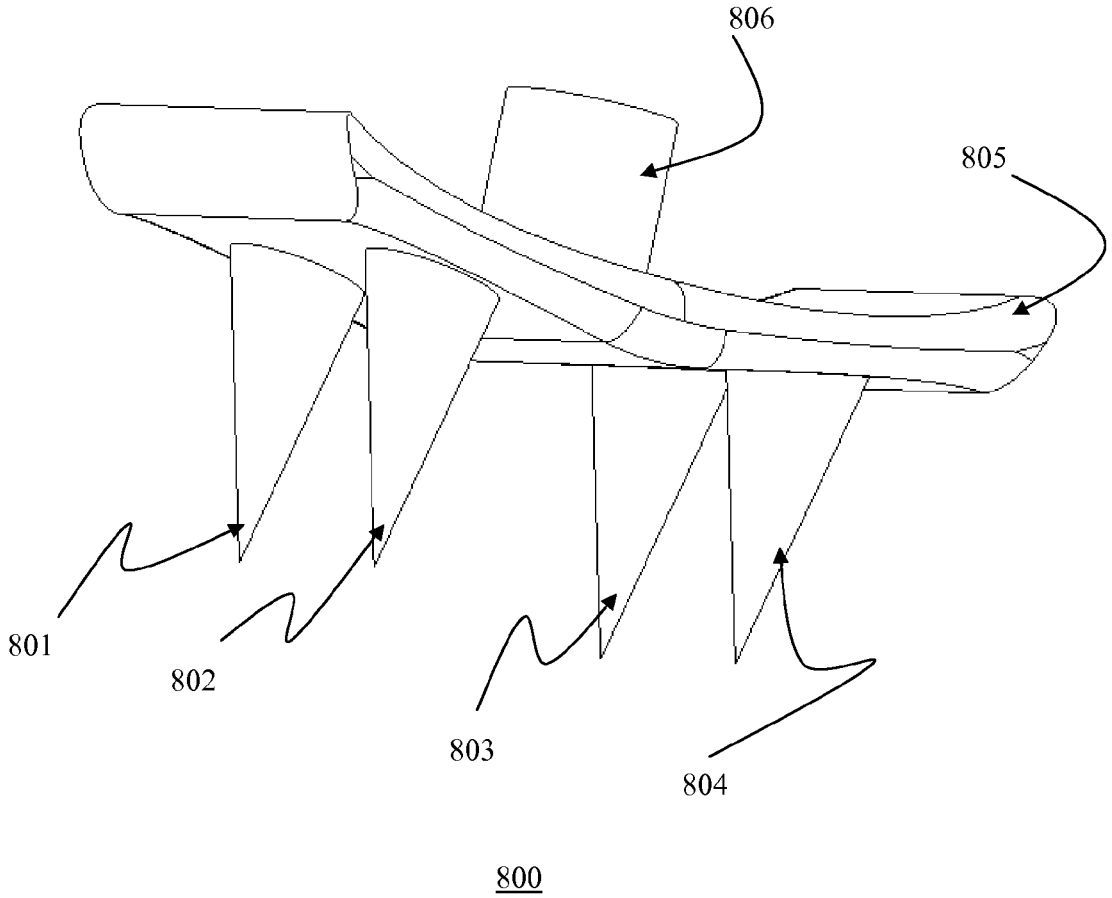

Fig. 8A

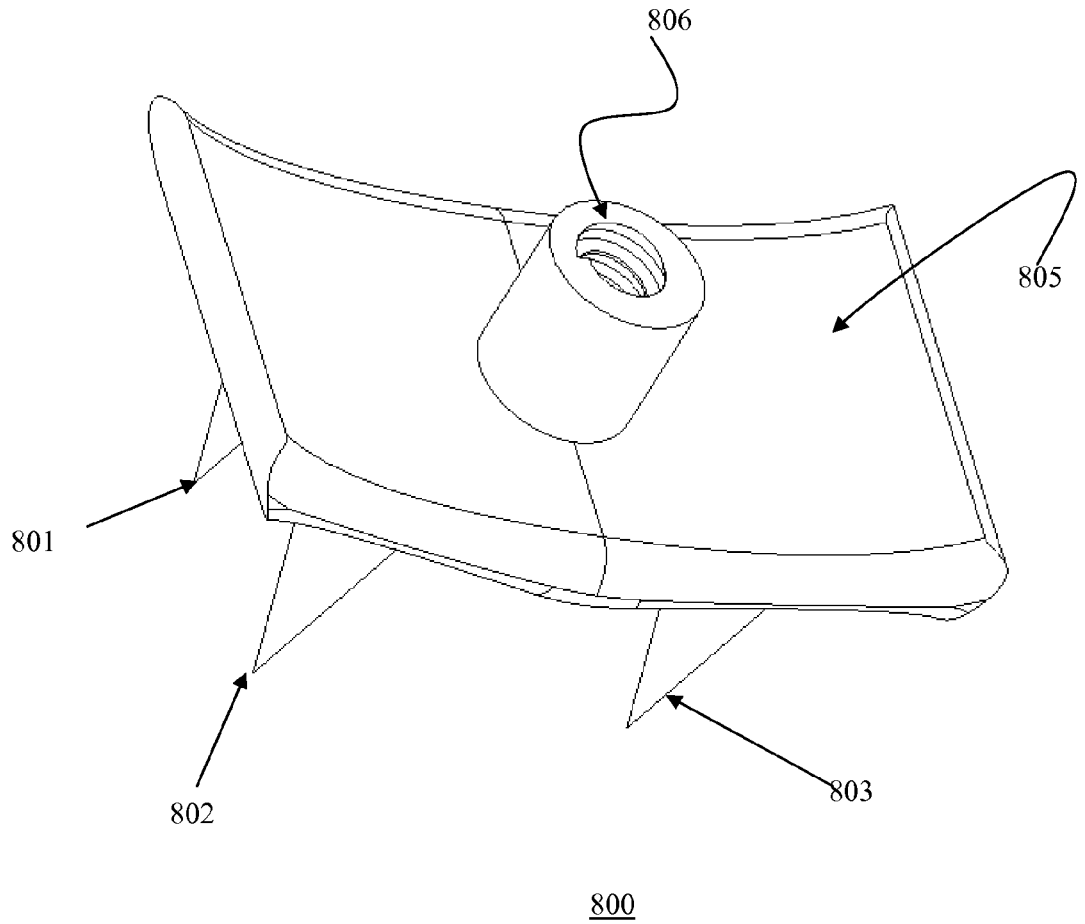

Fig. 8B

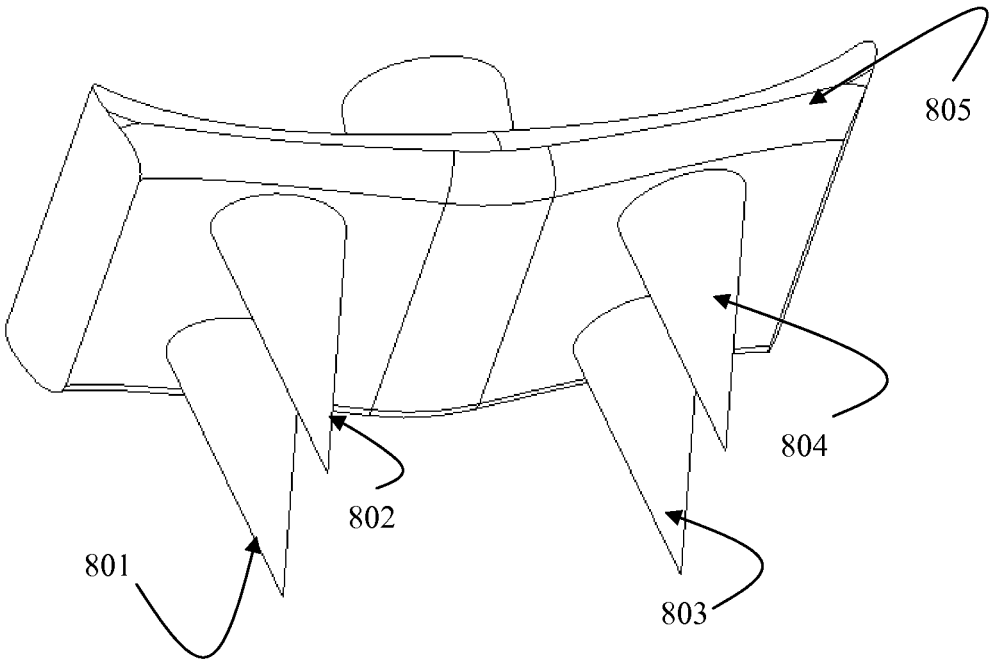

800

Fig. 8C

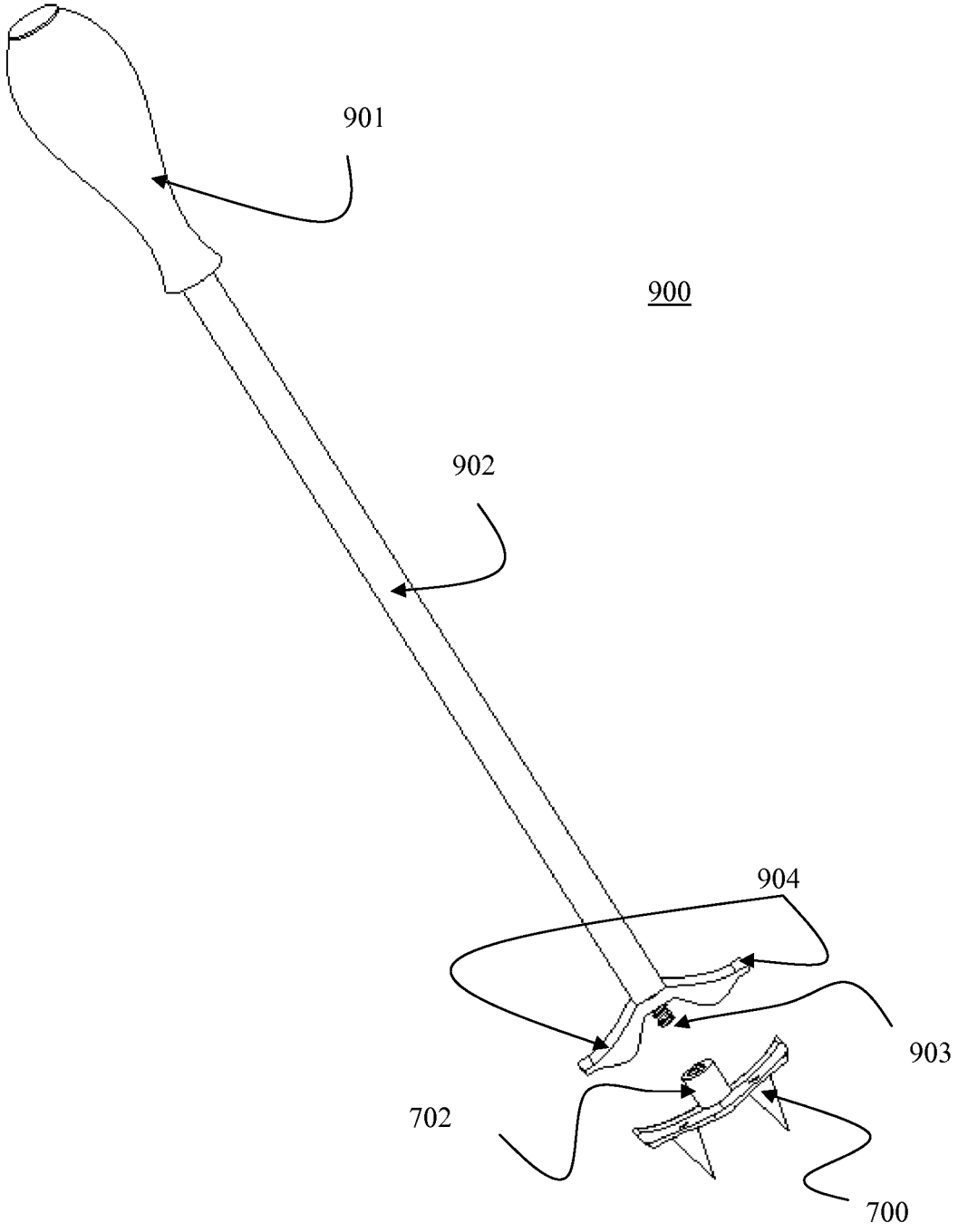

Fig. 9A

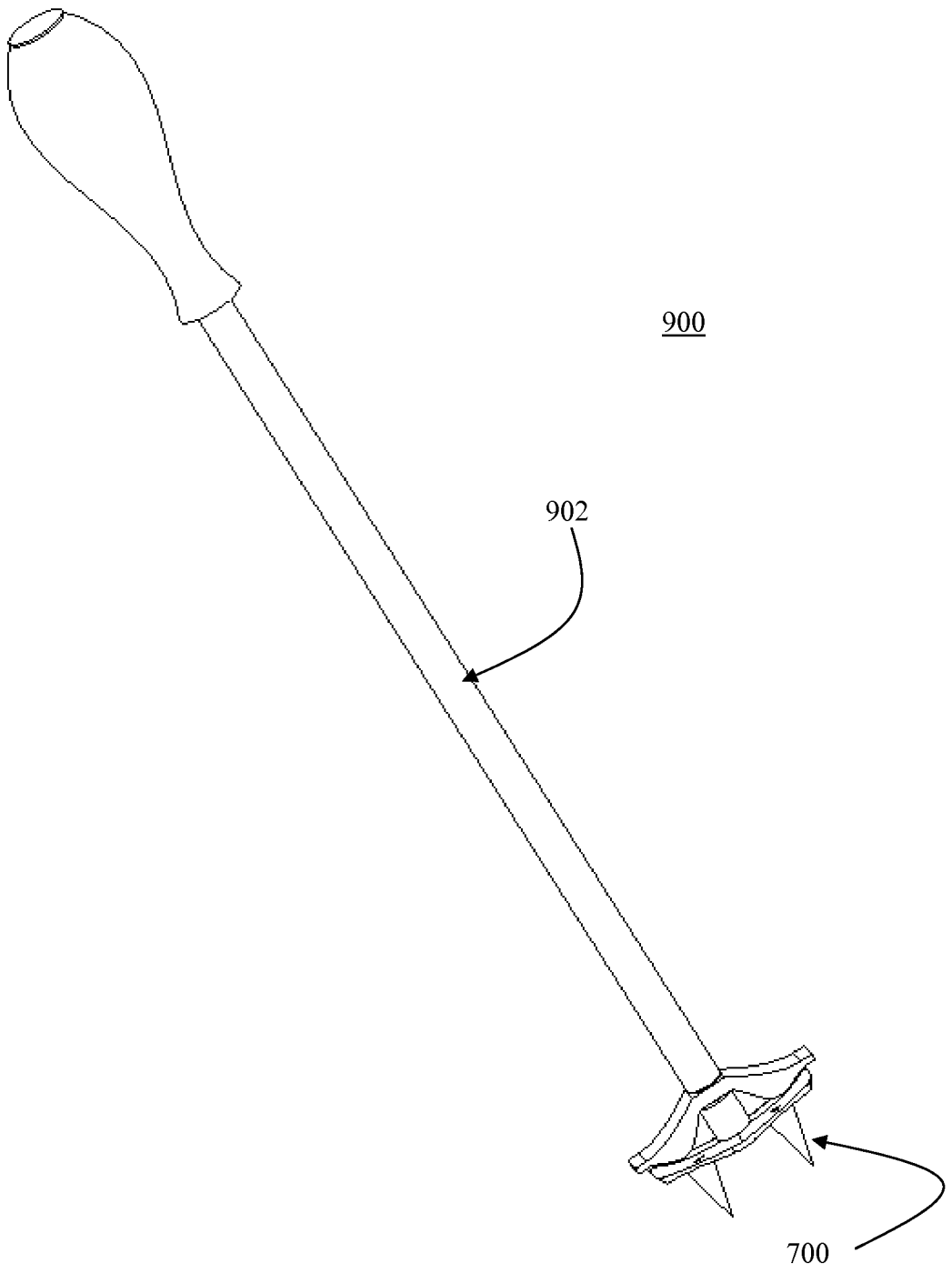

Fig. 9B

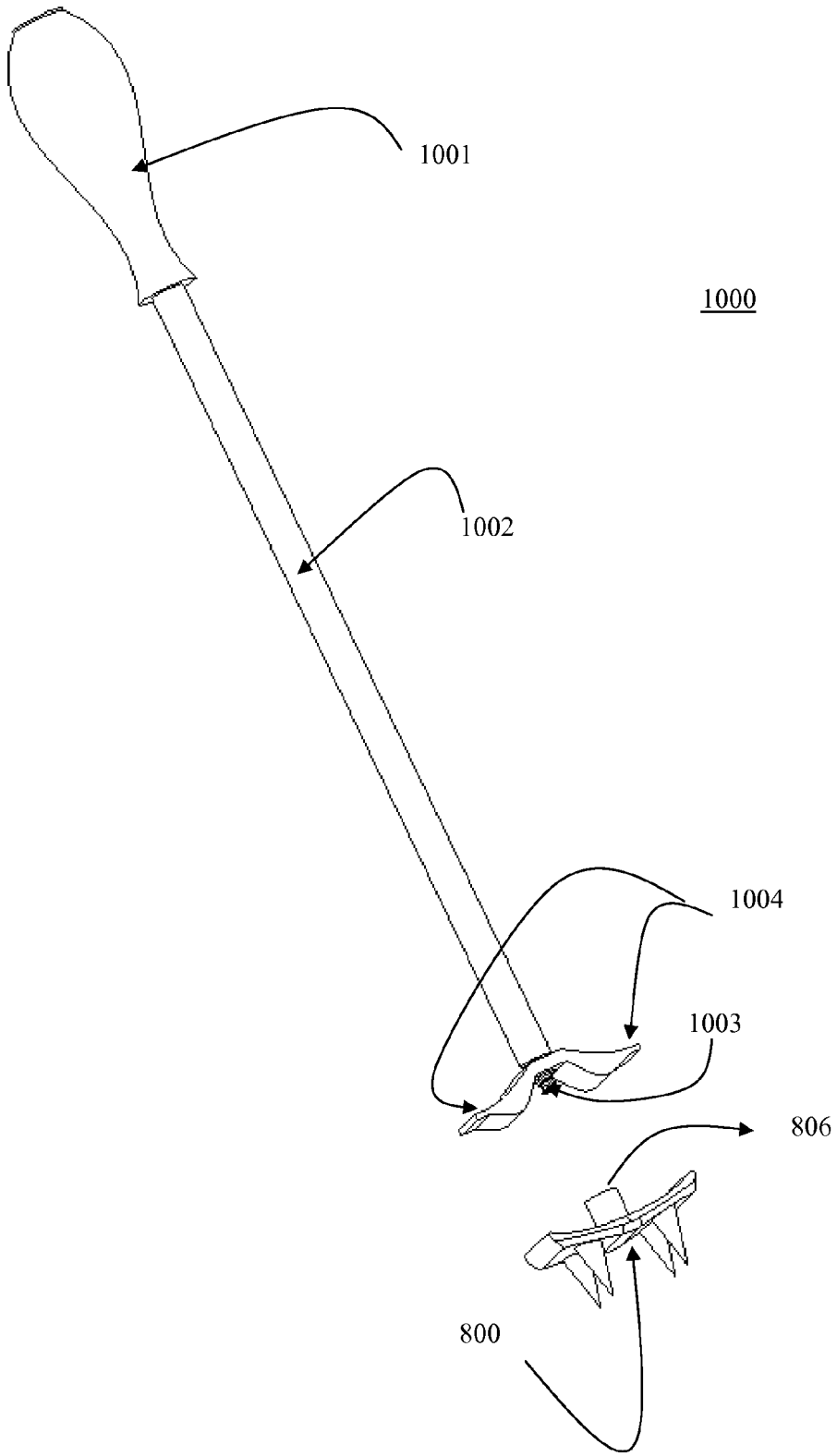

Fig. 10A

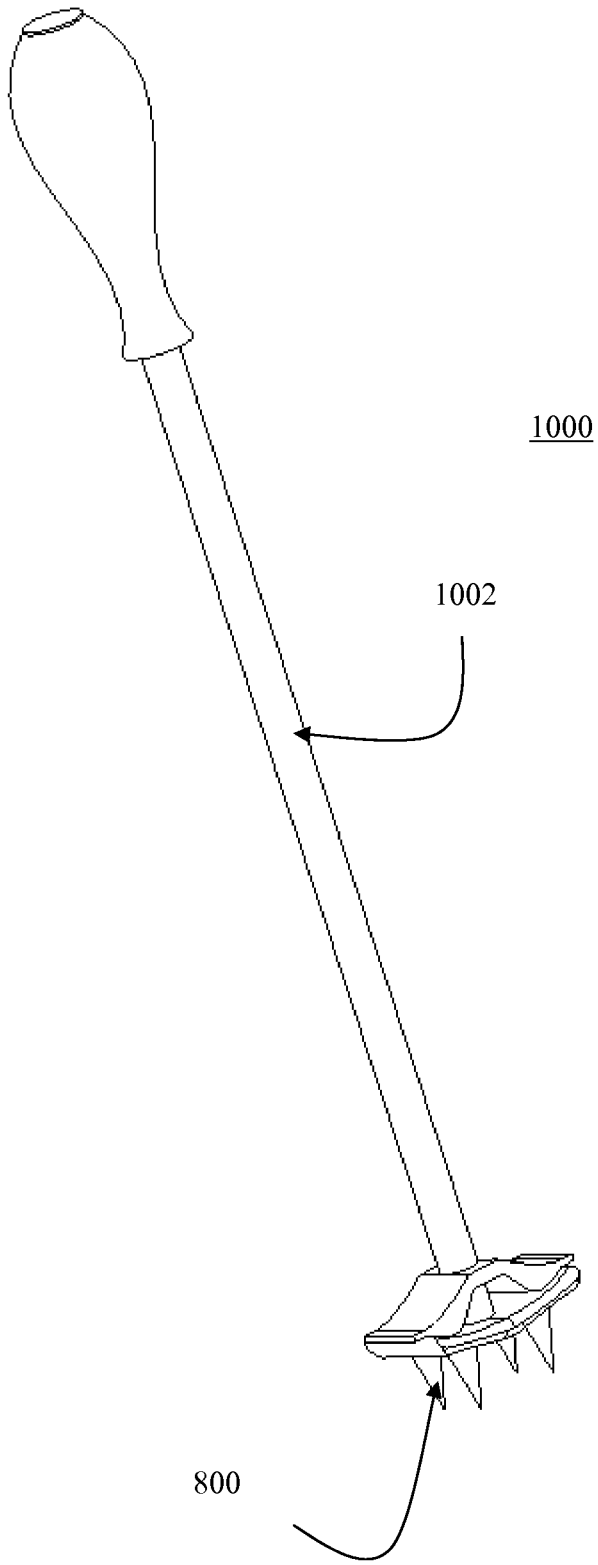

Fig. 10B

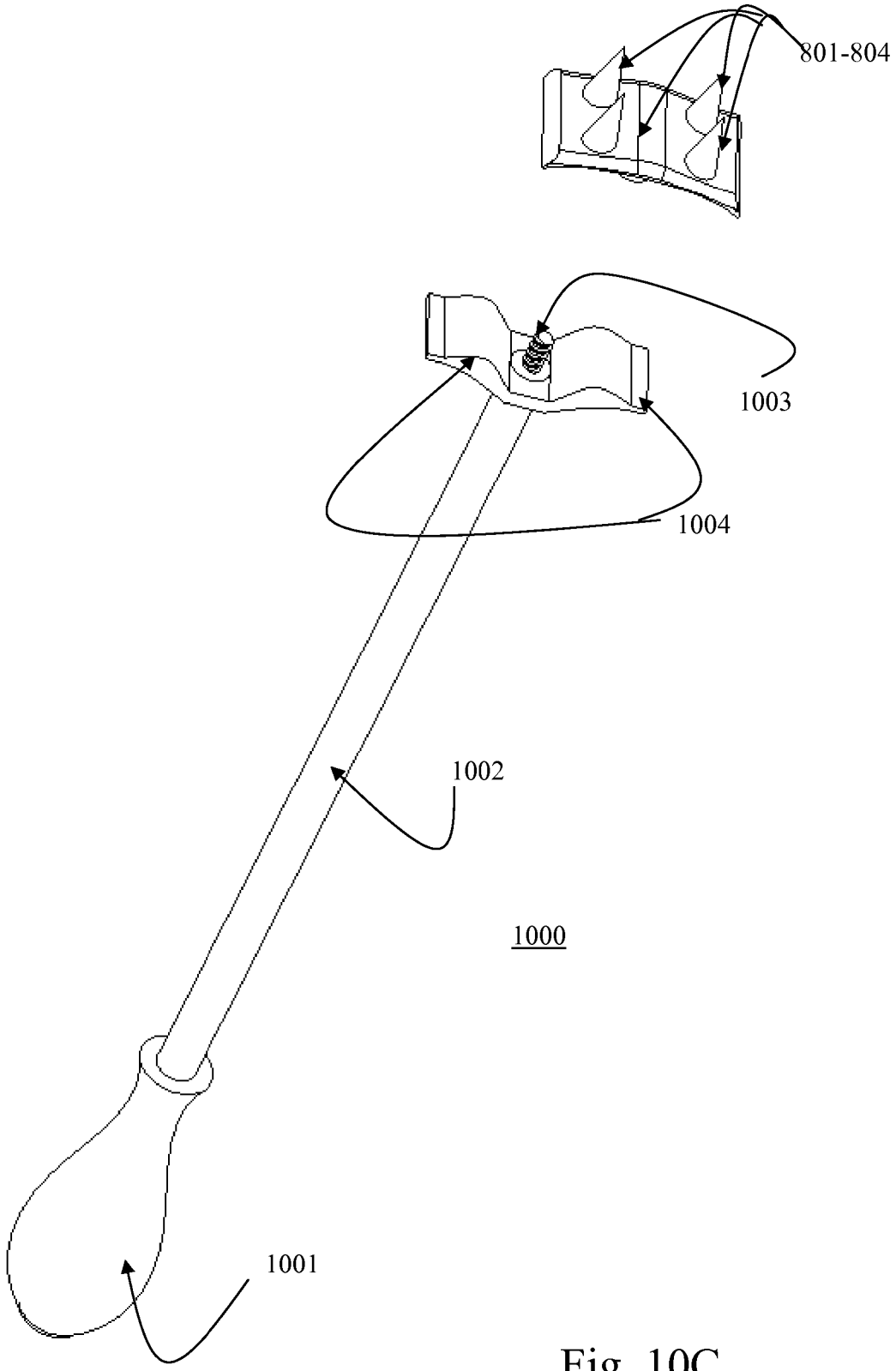

Fig. 10C

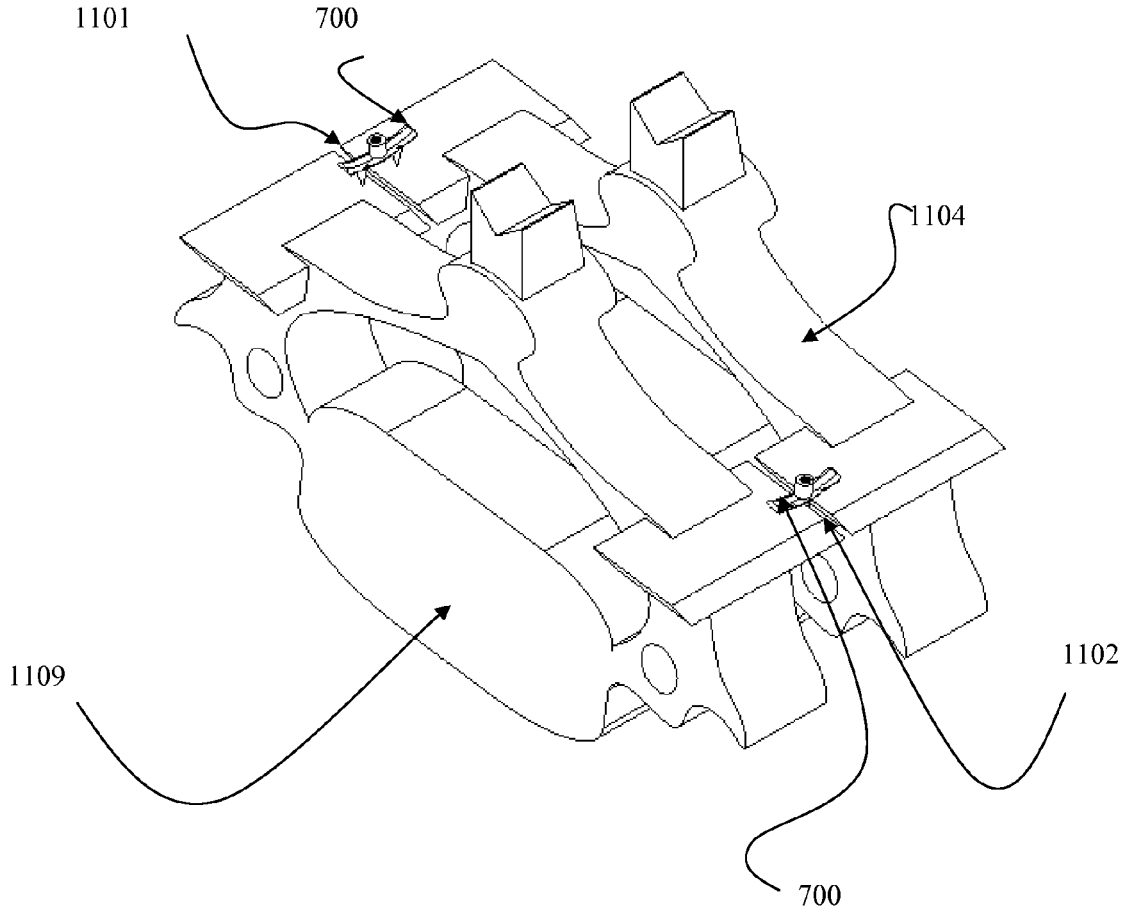

Fig. 11A

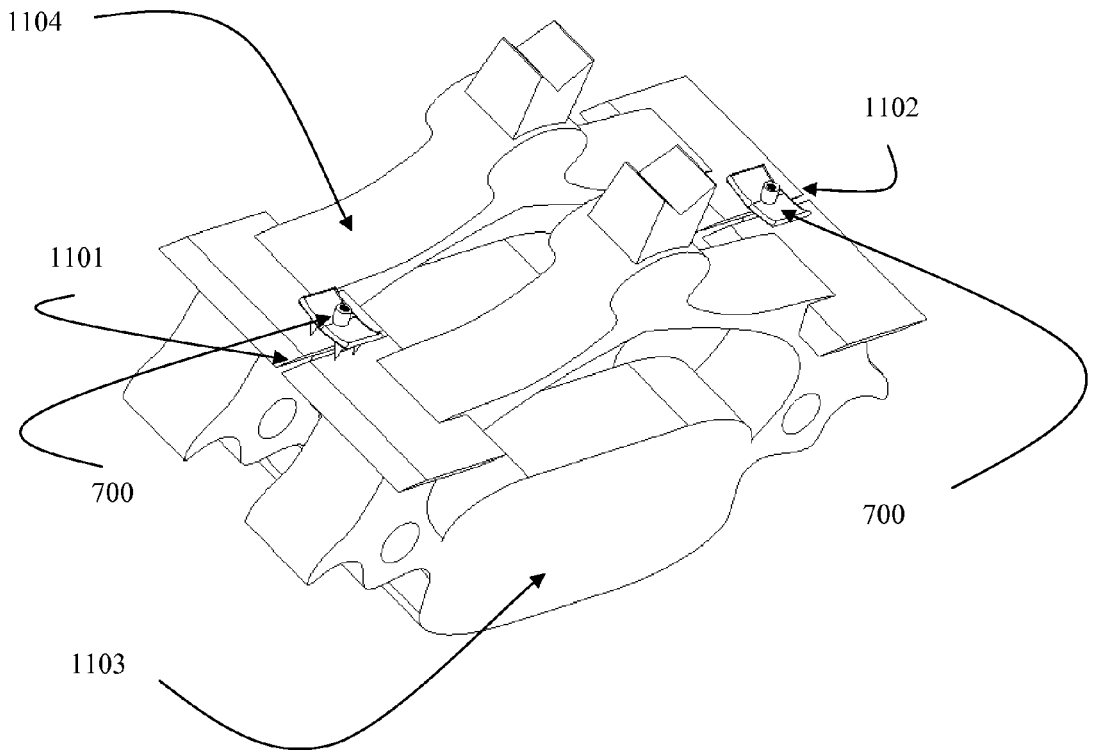

Fig. 11B

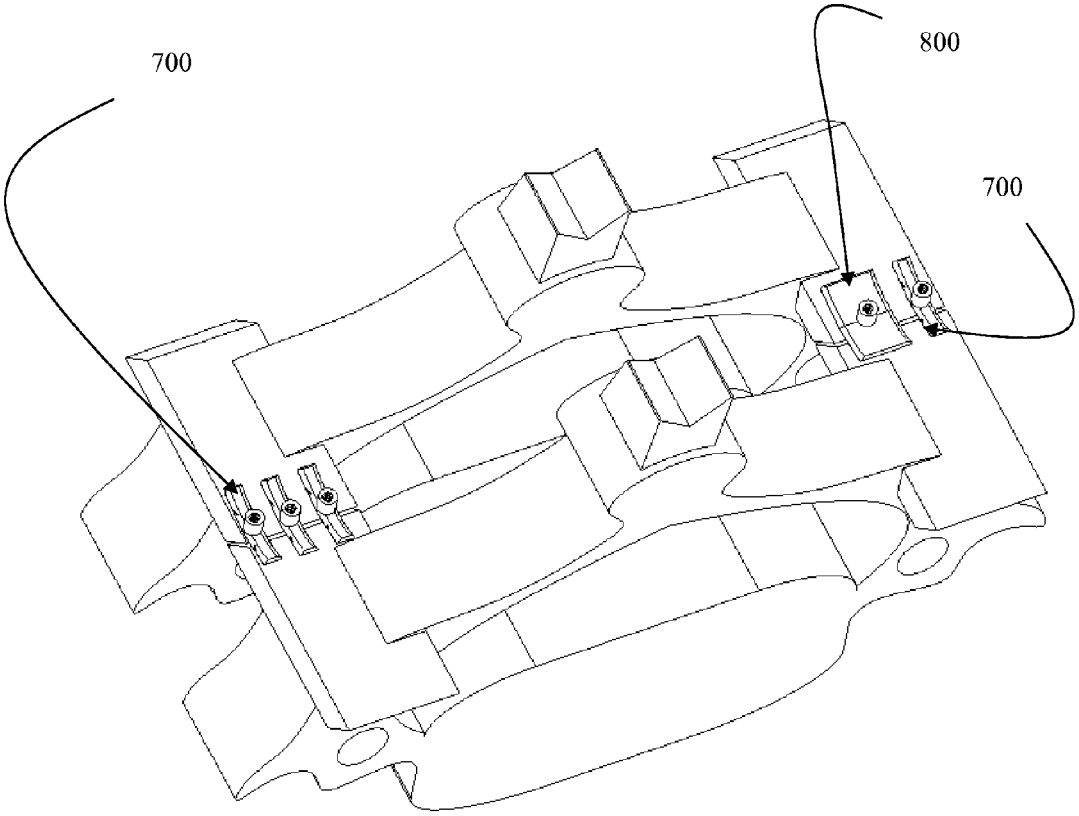

Fig. 11C

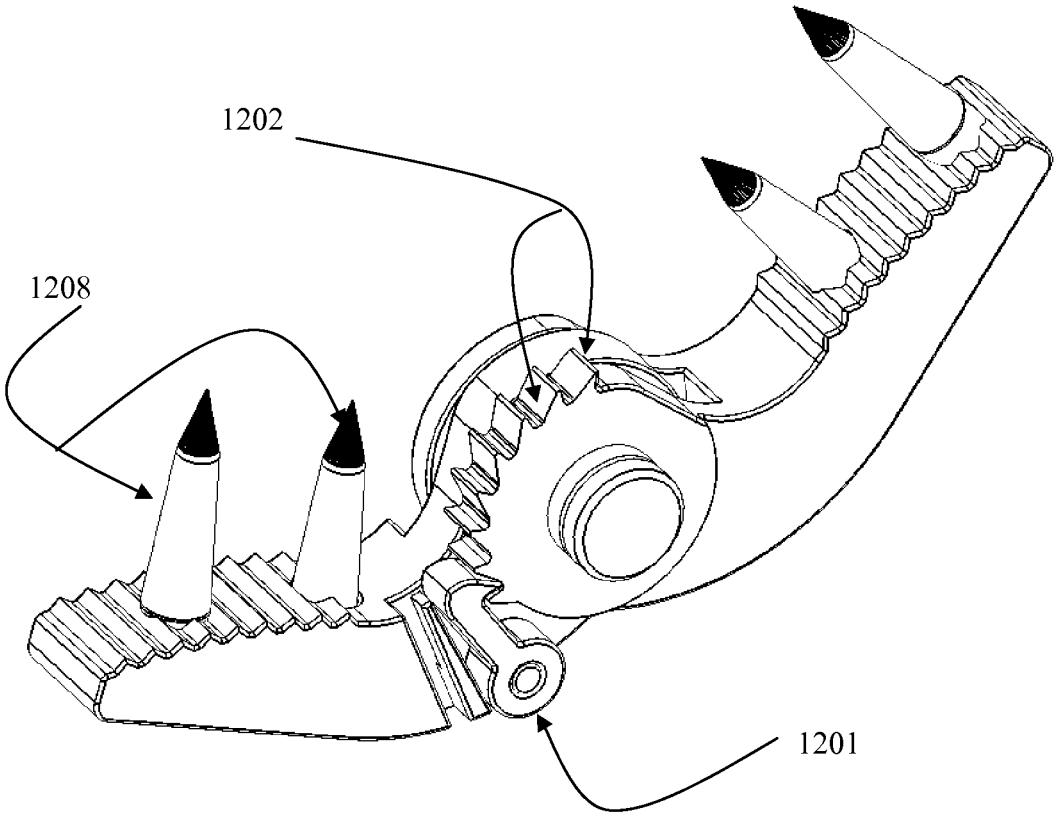

1200

Fig. 12A

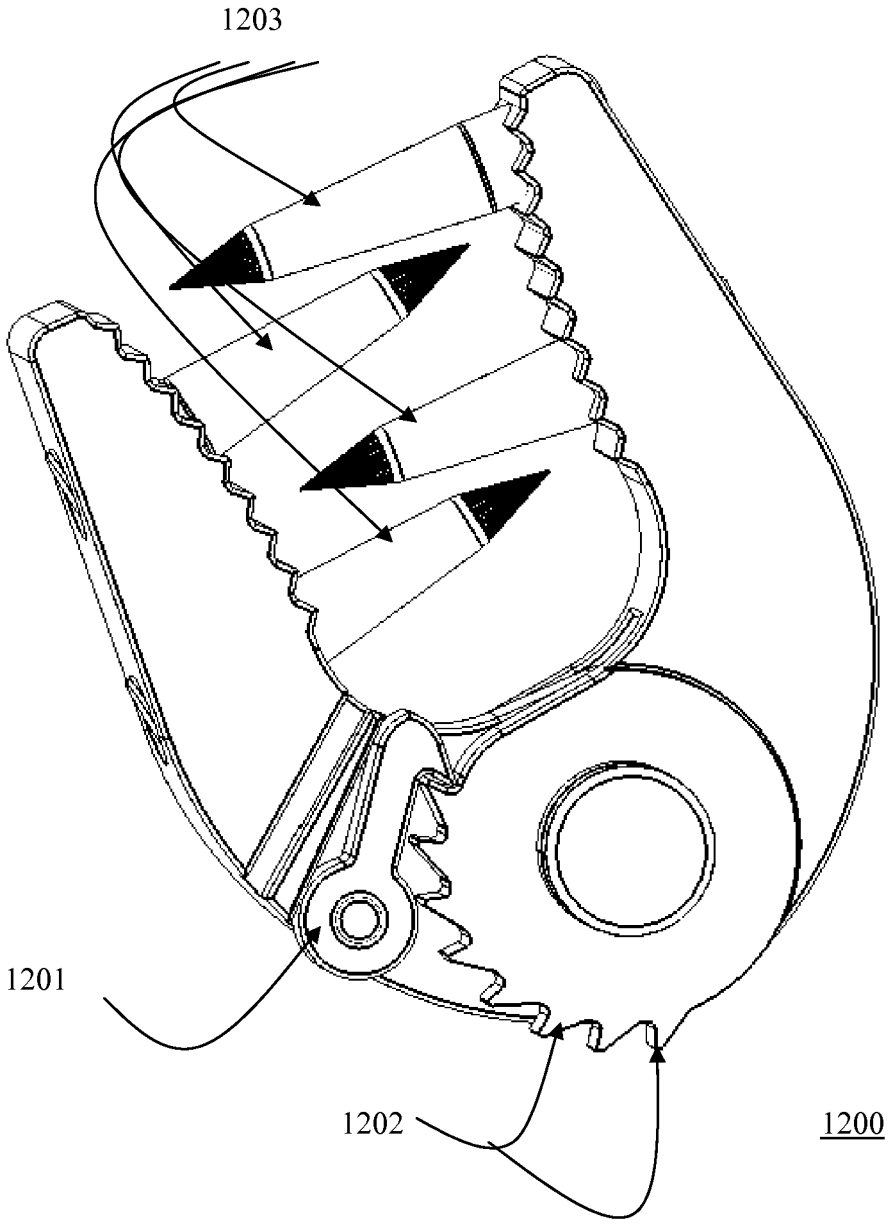

Fig. 12B

BI-DIRECTIONAL FIXATING TRANSVERTEBRAL BODY SCREWS AND POSTERIOR CERVICAL AND LUMBAR INTERARTICULATING JOINT CALIBRATED STAPLING DEVICES FOR SPINAL FUSION

CROSS-REFERENCE TO RELATED APPLICATIONS

This application is a Continuation Application of application Ser. No. 13,084,543, filed on Apr. 11, 2011, which is a Divisional Application of application Ser. No. 11/842,855, filed on Aug. 21, 2007, now U.S. Pat. No. 7,942,903 issued on May 17, 2011, and a Continuation Application of application Ser. No. 13,108,982, filed on May 16, 2011, which also is a Continuation Application of application Ser. No. 11/842,855, filed on Aug. 21, 2007, now U.S. Pat. No. 7,942,903 issued on May 17, 2011, which is a Continuation-In-Part Application of application Ser. No. 11/536,815, filed on Sep. 29, 2006, now U.S. Pat. No. 7,846,188 issued on Dec. 7, 2010, which is a Continuation-In-Part Application of application Ser. No. 11/208,644, filed on Aug. 23, 2005, now U.S. Pat. No. 7,704,279 issued on Apr. 27, 2010, for which priority is claimed under 35 U.S.C. § 120; and this application also claims priority under 35 U.S.C. § 119(e) of U.S. provisional application No. 60/670,231, filed on Apr. 12, 2005; the entire contents of all the above identified patent applications are hereby incorporated by reference.

BACKGROUND OF THE INVENTION

Field of Invention

The present invention relates to a unique universal bidirectional screw (BDS) system, and in particular its application to the spine, also referred to as bi-directional fixating transvertebral (BDFT) screws which can be used as a stand-alone intervertebral device which combines the dual functions of an intervertebral spacer which can be filled with bone fusion material(s), as well as a transvertebral bone fusion screw apparatus. In the posterior lumbosacral and thoracic spine, BDFT screw/box constructs can be used independently or supplemented with a novel horizontal mini-plate which prevents upward bone graft intrusion into the thecal sac and nerves. In the anterior lumbosacral spine BDFT screw box constructs can be inserted into and supplemented by a circumferential cage. These posteriorly and anteriorly placed stand-alone intervertebral body fusion constructs may obviate the need for supplemental pedicle screw fixation.

The present invention also relates to stand-alone or supplemental posterior cervical and lumbar calibrated interarticular joint stapling devices which may obviate and/or lessen the need for supplemental pedicle screw fixation.

Description of the Relevant Art

The history and evolution of instrumented spinal fusion in the entire human spine has been reviewed in our two prior copending application Ser. No. 11/536,815, filed on Sep. 29, 2006, and Ser. No. 11/208,644, filed on Aug. 23, 2005, the related contents of which are hereby incorporated by reference. Currently the majority of posterior cervical and almost all anterior and posterior lumbosacral and thoracic fusion techniques are typically supplemented with pedicle screw placement. Complications of pedicle screw placement in cervical, thoracic and lumbar spine include duration of procedure, significant tissue dissection and muscle retraction, misplaced screws with neural and/or vascular injury, excessive blood loss, need for transfusions, prolonged

recovery, incomplete return to work, and excess rigidity leading to adjacent segmental disease requiring further fusions and re-operations. Recent advances in pedicle screw fixation including minimally invasive and image-guided technology, and the development of flexible rods, imperfectly address some but not all of these issues.

Complications of all current spinal interbody fusion devices is their lack of coverage of the majority of the cross-sectional area of the vertebral endplates, and their lack of adequate, if any capacity to penetrate bone, and hence the heightened risk of implant extrusion. Furthermore the bone and biological bone fusion agents which are packed into the intervertebral space can easily blossom and grow upward into the thecal sac causing neural compression, in the absence of a physical barrier between the fusing growing bone, and the thecal sac.

SUMMARY

Herein we describe multiple device embodiments which combine in a single construct the dual functions of an intervertebral spacer maintaining disc space height, and transvertebral body fusion screws.

We also introduce an entirely novel horizontal mini-plate capping off the intervertebral space capable of functioning as a physical barrier preventing upward bone intrusion and/or compression of the ventral thecal sac, and traversing and exciting nerve roots.

Furthermore, we present an advanced mechanism in calibrated posterior facet joint stapling compared to our previous designs illustrated in our co-pending patents. We also introduce the entirely novel concept of posterior cervical facet staples to obviate and/or diminish the need for posterior cervical pedicle screw instrumented fusion. Using combinations and permutations of different embodiments of cervical facet staples in a modular manner advances the concept of flexible fusion in the cervical spine.

To achieve safe, effective and minimally invasive segmental spinal fusion, applicants propose the use of novel bi-directional fixating transvertebral (BDFT) screws which can be strategically inserted via anterior or posterior surgical spinal approaches into the anterior and middle columns of the interverterbral disc space. In our previous applications these bi-directional screws employed turning a wormed driving screw which turns a spur gear which in turn simultaneously turns a rostral oriented screw into the cephalad vertebral body, and a caudal directed screw into the caudal vertebral body. The vertebral bodies above and below the disc space by virtue of their engagement and penetration by the BDFT screws are thus linked, interlocked, and eventually biologically fused with placement of intervertebral bone agents.

In this current application one or more of the described embodiments may eliminate the intervening wormed driving screws and gears required by previous designs, e.g., a gearless screw box is achieved. We have designed a screw box to be placed inter-vertebrally, either unilaterally or bilaterally, in particular, posteriorly between vertebral bodies. The housing screw box incorporates built-in screw and/or drill guides which allow the direct placement and insertion of two self drilling screws which are driven in two opposing directions into superior and inferior vertebral bodies, respectively. One screw within the screw box is angled superiorly, and the other screw in the screw box is angled inferiorly.

In yet another embodiment, in addition to these features we designed an expanding screw box with sliding triangular

bases to house two screws driven in two opposing directions which can be expanded in two simultaneous directions, height and depth, by turning a built-in screw adjuster. This is accomplished by a combined positioning tool/screw guide/cage expander to further enhance trajectory precision and to simultaneously expand the screw box in height and depth to custom-fit the individual disc space height. This embodiment has two sub-embodiments; one has two laterally oriented BDFT screws, and the other has a lateral and a medial oriented BDFT screw. These innovations represent a continued evolution of our concept of expandable fusion cages described in our previous co-pending patents.

In yet another embodiment we designed a screw box which houses only one, instead of two screws. Each box allows the placement of one superior or inferior directed screw on one side (left or right), and the contra lateral screw box device allows placement of an inferior or superior oriented screw which goes in the opposite direction of the contra lateral device. In totality these two separate single screw boxes fuse the superior and inferior vertebrae. The potential advantage of this embodiment is that it diminishes the width of the screw box in cases where it might be favorable to have less nerve root retraction with a smaller width device.

In all screw-box embodiments, a rostral-directed screw is passed through one built-in screw guide of the device which then is inserted and screwed into the superior vertebral body. Then a caudaly directed screw is passed through an adjacent built-in screw guide which then is inserted and screwed into the inferior vertebral body. The novelty of this design is the built-in prescribed angles of the integral screw guides which allow the posterior transvertebral penetration into the vertebral bodies. This is a truly amazing feat accomplished in the posterior lumbar spine considering the small anatomically restricted work zone within which to work, which is very narrowly prescribed by obtuse angulations between screw and intervertebral bone surfaces, and by nerve root, facet joint and pedicle. We have also designed a positioning tool for the placement of the non-expandable screw boxes which has a screwdriver with a flexible shaft specifically designed to fit these devices if a straight screw driver impedes screw placement. Hence these external tools provide the means in any circumstance to accomplish precision screw trajectory. The embodiments described herein compared to our previous co-pending patent designs, streamline and ease production of bi-directionally oriented transvertebral screws, and allows placement of longer and wider screws with greater bone penetration to provide yet a sturdier fusion construct. The designs are also easily modifiable for anterior placement into the cervical spine. The expandable embodiment of the screw box can also be enlarged and modified to be suitable for cervical, thoracic and lumber vertebral body replacements.

The box casings have multiple perforations to allow both screw traversal and horizontal bone packing preventing upward vertical migration of bone. The boxes prevent subsidence. Both the inside of the denuded intervertebral space, and the screw boxes can be packed with autologous or allograft bone, BMP, DBX or similar osteoconductive material. Posteriorly or anteriorly in the lumbar spine, these screws can be capped with a horizontal mini-plate which will prevent bony growth into the thecal sac and nerves. We refer to this as a two-in-one device, i.e. two screw boxes/BDFT screws combined with one horizontal mini-plate. This is an entirely novel concept in posterior lumbar spinal surgery. In yet another embodiment two BDFT screw boxes can be combined with a circumferential cage (also 2 in 1) to be placed anteriorly into the lumbar spine.

It is believed that BDFT-screw constructs provide as strong or stronger segmental fusion as pedicle screws without the complications arising from pedicle screw placement which include screw misplacement with potential nerve and/or vascular injury, violation of healthy facets, possible pedicle destruction, blood loss, and overly rigid fusions. By placing screws across the intervertebral space from vertebral body to vertebral body, engaging anterior and middle spinal columns, and not the vertebral bodies via the transpediclar route, the healthy facet joints, if they exist, are preserved. Because this technique accomplishes both anterior and middle column fusion, without rigidly fixating the posterior column, it in essence creates a flexible fusion. This device therefore is a flexible fusion device because the preserved posterior facet joints retain their function achieving at least a modicum of mobility and hence a less rigid (i.e. a flexible) fusion.

The very advantage of transpedicular screws which facilitate a strong solid fusion by rigidly engaging all three spinal columns is the same mechanical mechanism whereby complete inflexibility of all columns is incurred thereby leading to increasing rostral and caudal segmental stress which leads to an increased rate of re-operation.

Transvertebral fusion also leads to far less muscle retraction, blood loss, and significant reduction in O.R. time. Thus the complication of pedicular screw pull-out and hence high re-operation rate associated with the current embodiment of flexible fusion pedicle screws/rods is obviated. The lumbosacral screw box embodiments and BDFT screws can be introduced via posterior lateral, transforaminal or anterior interbody fusion approaches/techniques. Although one can opt to supplement these screws with transpedicular screws there would be no absolute need for supplemental pedicle screw fixation with these operative techniques.

BDFT screw constructs outlined here can also be combined with novel zero-profile horizontal cervical and, lumbar/thoracic mini-plates. Likewise one or two of these devices can be inserted anteriorly with or without circumferential cage supplementation.

Because the BDFT screws engage a small percentage of the rostral and caudal vertebral body surface area, multilevel fusions can be performed with these devices.

Previous improvements included a novel calibrated lumbar/thoracic facet stapling device which staples the inferior articulating facet of the superior segment to the superior articulating facet of the caudal vertebral segment unilaterally or bilaterally, which may minimize motion until interbody fusion occurs. In the present patent application we introduce a new design of the staple enhancing its calibrating capability.

In this patent application we also introduce a novel posterior cervical facet stapling device which staples the inferior articulating facet of the superior cervical segment with the superior articulating facet of the caudal vertebral segment unilaterally or bilaterally.

The advantage of cervical facet staples is speed and safety. The risks of cervical facet pedicle screw fixation which include nerve root and vertebral artery injuries are completely obviated. Thus they thereby achieve the same function of pedicle screws without the risks.

Placement of different embodiments of the cervical facet staples along unilateral and/or bilateral facet joints in a modular manner, lead to differing degrees of calibrated motion joint motion hence introducing for the first time the concept of calibrated cervical fusion.

Currently failed anterior lumbar arthroplasties are salvaged by combined anterior and posterior fusions. BDFT screw constructs could be utilized as a one-step salvage operation for failed/extruded anteriorly placed lumbar artificial discs obviating the above salvage procedure which has far greater morbidity.

For example, in one general aspect, a self-drilling bone fusion screw apparatus includes a first sliding box, a second sliding box, positioned relative to the first sliding box, a first screw member having a tapered end and a threaded body disposed within the first sliding box, a second screw member having a tapered end and a threaded body disposed within the second sliding box, and an adjuster for adjusting the height of the sliding boxes.

Implementations of this aspect may include one or more of the following features. For example, the first and second screw members may be medially aligned. At least one of the first and second screw members may be laterally aligned. The first and second screw members are laterally aligned. One of the first and second screw members is laterally aligned and the other screw member is laterally aligned. The first and second sliding boxes may be substantially triangularly shaped. The triangularly shaped first and second sliding boxes may include a sliding rail and ridged surfaces. The triangularly shaped first and second sliding boxes may include holes for bone grafts. The adjuster may include a screw.

In another general aspect, a self-drilling bone fusion screw apparatus includes a box, a first screw member having a tapered end and a threaded body disposed at least partially within the box and laterally aligned with the box, a second screw member having a tapered end and a threaded body disposed at least partially within the box and laterally aligned with the box, and a plurality of ridges disposed on along the sides of the box.

Implementations of this aspect may include one or more of the following features. For example, the apparatus may include bone graft holes. The apparatus may be attachable to a second self-drilling fusion screw apparatus via a plate.

In another general aspect, a self-drilling bone fusion screw apparatus may include a first box, a first screw member having a tapered end and a threaded body disposed at least partially within the first box and laterally aligned with the first box, a second box, a second screw member having a tapered end and a threaded body disposed at least partially within the second box and laterally aligned with the second box, and an attachment member for engaging the first and second boxes.

Implementations of this aspect may include one or more of the following features. For example, the self-drilling bone fusion screw apparatus may include bone graft holes. The plate may be directly joined to the first and second boxes by a plurality of screws. The attachment member for engaging the first and second boxes may include a plate or the attachment member may include a circumferential cage defining at least one recess. The first and the second boxes may be positioned within or securely held within the recess of the circumferential cage, e.g., with an interference fit.

In another general aspect, a tool assembly for manipulating a self-drilling bone fusion screw apparatus includes a handle, a gripper cooperating with the handle and having a plurality of prongs, a screw guide, held in place the plurality of prongs, for controlling the direction of self-drilling screws that are screwed into a vertebral body.

Implementations of this aspect may include one or more of the following features. For example, the tool assembly for manipulating a self-drilling bone fusion screw apparatus may include a key for controlling an adjustment device which controls the height of the self-drilling bone fusion screw apparatus. The tool assembly according to claim may include a driver assembly. The driver assembly may include a handle, a drive bit portion, and a flexible drive shaft extending between the handle and the drive bit portion for manipulating a screw of an expandable or non-expandable screw box. The assembly may include one or more of an expandable screw box and/or a non-expandable screw box. The boxes may include one or more screws. The screw boxes may be joined by or include an attachment member, such as a plate and/or a circumferential cage.

In another general aspect, a cervical facet staple includes a curved staple base, at least two prongs attached to the bottom surface of the curved staple base, and an insertion member disposed on the top surface of the curved staple base.

Implementations of this aspect may include one or more of the following features. For example, the staple may include at least four prongs attached to the bottom surface of the curved staple base. The insertion member may include a threaded insert.

In another general aspect, an impaction tool for a cervical facet staple includes a handle, a stem attached to the handle, a plurality of wings for contacting the cervical facet staple, and an insertion member for coupling the cervical facet staple to the impaction tool.

Implementations of this aspect may include one or more of the following features. For example, the handle may include a flattened portion that can be struck by a mallet.

In another general aspect, a lumbar facet staple includes a pair of rotating arms, at least two prongs attached to the inner surfaces of the rotating arms, a plurality of spurs attached to one of the rotating arms, and a ratchet attached to one of the rotating arms. The rotating arms and prongs are rotated to a closed position to staple a lumbar facet joint.

BRIEF DESCRIPTION OF DRAWINGS

FIGS. **1**A-D illustrate the Lumbar intervertebral screw box with one lateral oriented BDFT screw and one medially oriented BDFT screw (Embodiment IA) in sagittal-oblique (FIG. **1**A), superior perspective (FIG. **1**B), inferior perspective (FIG. **1**C) and exploded (FIG. **1**D) views.

FIG. **1**E illustrates the lumbar intervertebral expandable screw box with two lateral oriented BDFT screws (Embodiment IB; sagittal-oblique view).

FIGS. **2**A-C illustrate the Lumbar intervertebral non-expandable screw box with two BDFT screws (Embodiment II) in lateral (FIG. **2**A), oblique (FIG. **2**B), and superior perspective (FIG. **2**C) views.

FIG. **3** illustrates a superior oblique perspective view of left and right lumbar intervertebral non-expandable screw boxes with one BDFT screw (Embodiment III).

FIGS. **4**A-B illustrate the horizontal intervertebral zero-profile mini-plate prior to insertion (FIG. **4**A), and after insertion (FIG. **4**B) into two non-expandable lumbar intervertebral screw boxes with two BDFT screws.

FIG. **4**C illustrates two non-expandable lumbar intervertebral screw boxes with two screws within a large circumferential cage for anterior placement into the lumbar spine

FIGS. **5**A-C illustrate t positioning tool/screw guide/box expander in oblique perspective (FIG. **5**A), lateral (FIG. **5**B), and exploded (FIG. **5**C) views.

FIG. **5**D illustrates a superior oblique perspective view of the positioning tool/drill guide/box expander component.

FIGS. E-G illustrate the sequential steps (I-III) of the positioning tool/screw guide/box expander assembly. Step I (FIG. **5**E), step II (FIG. **5**F), and step III (FIG. **5**G).

FIGS. **5**H-I illustrate the positioning tool for impaction and placement of the non-expandable screw box with two transvertebral screws. Embodiment I has a rectangular positioning handle (FIG. **5**H), and embodiment II has a circular positioning handle (FIG. **5**I)

FIGS. **6**A-B illustrate the insertion of expandable Lumbar bi-directional screw box with two BDFT screws into the Lumbar spine in oblique (FIG. **6**A) and lateral (FIG. **6**B) views.

FIGS. **7**A-B illustrate the cervical facet staple (Embodiment I) in lateral (FIG. **7**A) and oblique (FIG. **7**B) views.

FIG. **8**A-C illustrate the cervical facet staple (Embodiment II) in oblique (FIG. **8**A), superior perspective (FIG. **8**B) and inferior-oblique (FIG. **8**C) views.

FIG. **9**A illustrates the two-pronged cervical facet staple inserter/impactor (Embodiment I).

FIG. **9**B illustrates the two-pronged cervical facet staple inserter/impactor inserted into the staple (Embodiment I).

FIG. **10**A illustrates the four pronged cervical facet staple impactor (Embodiment II).

FIG. **10**B illustrates the four pronged cervical facet staple impactor inserted into the cervical facet staple (Embodiment II).

FIG. **10**C illustrates an inferior-oblique perspective view of the four-pronged cervical facet staple impactor (Embodiment II).

FIG. **11**A illustrates placement of two-pronged cervical facet staples in a three-dimensional cervical spine.

FIG. **11**B illustrates placement of four-pronged cervical facet staples in a three-dimensional cervical spine.

FIG. **11**C illustrates modular placement of two and four pronged cervical facet staples in a three-dimensional cervical spine to achieve differing calibrated degrees of flexibility.

FIGS. **12**A-B illustrate the Lumbar facet joint staple with a calibrated ratcheting mechanism in opened (Figure A) and closed (Figure B) positions.

DETAILED DESCRIPTION OF THE INVENTION

1. The Medical Device

Referring to FIGS. **1-6**, the above described problem can be solved in the thoracic and lumbar spine by insertion into the denuded intervertebral disc space multiple embodiments of screw box constructs with BDFT screws.

FIGS. **1**A-D illustrate three-dimensional views of the Lumbar intervertebral expandable screw box **100** with two BDFT screws **101**, **102**; one lateral and one medially oriented (Embodiment IA). FIG. **1**E illustrates a sagittal-oblique view of the lumbar intervertebral expandable screw box **120** with two lateral oriented BDFT screws **121**, **122** (Embodiment IB).

The expandable box **100** consists of top and bottom triangular sliding bases **103**, **104** (FIG. **1**-D). The superior and inferior segments of the height/depth adjusting screw **105** are integrated and connected to the two separate top and bottom triangular bases **103**, **104**, respectively. By turning this adjusting screw **105** back and forth i.e. clock-wise, and counter clockwise, the sliding rails **106** of the top triangular base **103** (FIG. **1**D) slide up and down the rail inserts **107** on the bottom triangular base **104** (FIG. **1**D). This action will simultaneously alter the intervertebral height and depth of the screw box **100** allowing individualized custom fitting of the screw box **100** conforming to the dimensions of the disc space.

Transvertebral screw **101** penetrates the top base **103**, and transvertebral screw **102** traverses the bottom base **104** of the screw box **100**. The two screws **101**, **102** traverse the screw box **100** in opposing directions, bi-directionally (whether they are lateral or medially oriented). The external edges of the triangular bases **103**, **104** in contact with vertebral body surfaces include ridges **107**. This facilitates the screw box's **100** incorporation into and fusion with the superior and inferior vertebral bodies (FIGS. **1**A-E). Both top and bottom screw box bases **103**, **104** are perforated with holes **108** to allow bone placement for fusion. The entire construct, furthermore, is hollow to allow bone filling. Hence this device functions as both an intervertebral bone fusion spacer and bi-directional transvertebral screw fusion device.

FIGS. **2**A-C illustrate three-dimensional views of the Lumbar intervertebral non-expandable screw box **200** with two BDFT screws **201**, **202** (Embodiment II). Screws **201** and **202** perforate and orient in opposing, superior and inferior directions. There are holes **208** and hollow spaces allowing packaging with bone. There are also holes which allow the traversal of screws. The superior and inferior edges include ridges **207** to facilitate integration and fusion with superior and inferior vertebral bodies. The expandable screw box **200** may include a screw insert **209** to attach a horizontal mini-plate (not shown). The self-contained internalized drill guides are at a 25 degree angle. The screw boxes can be designed with the internalized drill guides with different angles and/or different positions within the box.

FIG. **3** illustrates a three-dimensional view of left and right lumbar intervertebral non-expandable screw boxes **300***a*, **300***b* with one BDFT screw **301** or **302** (Embodiment III). It is roughly half the width of Embodiments I and II. Screw **301** is inserted into screw box **300***a* (left) and screw **302** is inserted into screw box **300***b* (right). There are holes **308** and hollow spaces allowing packing of bone to achieve biological fusion. The combined effect of one superior oriented and one inferior oriented screw fuses the superior and inferior vertebral bodies with small constructs. This also enables placement of larger dimension screws compared to embodiments I and II.

FIGS. **4**A and B illustrate three-dimensional views of the horizontal intervertebral zero profile mini-plate **400** with two non-expandable lumbar intervertebral screw boxes **300***a*, **300***b* housing two BDFT screws **301**, **302**. FIG. **4**A illustrates the perforations **401** within the plate **400** through which small plate securing screws **310** will be inserted to connect it to the built-in screw holes of the screw box **300***a*, **300***b* (FIG. **4**B). The horizontal mini-plate **400** together with the top surfaces of left and right screw boxes **300***a*, **300***b* provide a physical barrier between the underlying bone placed beneath it (not illustrated), and the thecal sac and nerve roots above it (not illustrated).

FIG. **4**C illustrates two screw boxes **300***c*, **300***d* within a circumferential cage **420** (2 in 1) construct which is designed for anterior placement into the lumbar spine. There are slots **308***a*, **308***b* for bone graft placement, both outside and inside the boxes. The circumferential cage **420** has perforations **401***a* for the placement of transvertebral screws (not shown).

FIGS. **5**A-C illustrate three-dimensional views of the external drill/screw guide-box expander **500** which assists in screw trajectory and box expansion (embodiments IA-B).

For embodiments II and III, the same instrument is utilized; however, an expanding Allen key component is not used.

The key components of this device include an Allen key **501**, a spring **502**, a handle **503**, a griper **504** and a screw guide **505**. The Allen key **501** when inserted in the insertion **514** and turned, turns the screw adjuster (FIG. **5**C) which in turn regulates top and bottom triangular screw box base sliding, and hence box **200** width and depth. The griper **504** has griper prongs **506** which insert into grooves of the screw guide **505** and the screw box **200** (FIGS. **5**A-D) thus perfectly aligning them.

FIG. **5**D illustrates a superior oblique view of the screw guide **505** demonstrating insertions **509** for griper prong **506**, built-in trajectory guides **511**, **512** for insertions of screws **101** and **102**, and the Allen key **501**.

FIGS. **5**E-G illustrate three-dimensional views of the sequential steps necessary for the external guide assembly. FIG. **5**E illustrates the insertion of the Allen key **501** into the handle **503**. FIG. **5**F illustrates the insertion of the handle **503** through the spring **502** and griper **504**. FIG. **5**G illustrates insertion of the griper **504** into the screw guide **505**.

FIGS. **5**H-I illustrate three-dimensional views of a positioning tool **500***a* for impaction and placement of two transvertebral screws **201**, **202** in the non-expandable screw box **200**. The driver assembly **550** consists of a screw driver **551**, a flexible shaft **552** and a square recess bit **553**. This facilitates turning the screws **201**, **202** into the bone. The flexible shaft **552** facilitates the avoidance of spinous processes which might hinder the screw driving if the shaft **552** were straight. The positioning tool **500***a* can have a rectangular handle, Embodiment I (FIG. **5**H), or a circular handle, Embodiment II (FIG. **5**I). This serves to position the screw box within the intervertebral space, and screws **201**, **202** within the screw box. Once positioned, the screw box can be impacted by tapping the handle with a mallet (not shown). The positioning tool's **500***a* griper handle inserts into the screw guide and the box, which maintains alignment.

FIG. **6**A illustrates a three-dimensional view of insertion of the construct (Embodiment I) into the lumbar intervertebral disc space.

FIG. **6**B illustrates a three dimensional lateral view of insertion of the construct (Embodiment I) into the disc space with short screws. Placement with longer screws would capture more bone.

FIGS. **7**A and B illustrate three-dimensional views of the two-pronged cervical facet staple **700** (Embodiment I). There is a staple base **701** which is contoured to align with the curved surface of the cervical facet joints. There is a superior impactor threaded insert **702**. An impactor can be screwed into this insert **702** and then impacted with a mallet. The two spikes **703**, **704** perforate the inferior and superior facets of the superior and inferior vertebral bodies hence leading to cervical facet joint fusion. The spikes can be designed with ridges and/or fishhooks to facilitate irreversible extraction.

FIGS. **8**A-C illustrate three-dimensional views of the four-pronged cervical facet staple **800** (Embodiment II). Likewise it has a staple base **805** contoured specifically for the surface of the facet joint. It also has an impactor insert **806**. The insertion of a device with four prongs **801**-**804** instead of two prongs further limits the degrees of motion of the joint hence making the fusion more rigid.

FIGS. **9**A-B illustrate a three-dimensional view of the two-pronged cervical staple impactor **900**. It has a handle **901**, a stem **902**, and a screw insert **903** which can be screwed into the threaded staple insert. The impactor has two wings **904** which keep the staple base edges in place facilitating staple impaction. The handle **901** of the impactor **900** is broad in order to allow impaction by a mallet.

FIGS. **10**A-C illustrate three-dimensional views of the four-pronged cervical staple impactor **1000** (Embodiment II). It has the same features as the two-pronged impactor **900**, except its wings **1004** are broader accommodating the broader staple base. The impactor **1000** also includes a handle **1001**, a stem **1002**, and an impact screw **1003**.

FIG. **11**A illustrates a three-dimensional view of placement of the two pronged cervical facet staple **700** into a cervical spine model having vertebral body **1103** and lamina **1104**. One staple **700** is perched on the joint **1101** prior to impaction. The other staple **700** is impacted.

FIG. **11**B illustrates a three-dimensional view of placement of the four pronged cervical facet staple **800** into a cervical spine pre and post impaction.

FIG. **11**C illustrates the concept of modularity and incremental diminution of movement of the joint by the modular placement of different combinations and permutations of varying numbers of two and four pronged cervical facet staples **700**, **800**. If one wishes to have the most flexible (least rigid) fusion, one would place a unilateral two pronged staple **700**. One can increase i.e. calibrate increasing degrees of rigidity by increasing the number of prongs penetrating the facet joints bilaterally. In FIG. **11**C each facet joint is fused using a total number of six prongs. One side this is accomplished by using three two pronged staples **700**, and on the other side using one four pronged staple **800** and one two pronged staple **700**. These two embodiments can be mixed and matched unilaterally or bilaterally to vary the degree of rigidity and conversely flexibility of fusion. The most flexible fusion at one level would be accomplished by one staple **700** (2 prongs). The highest level of rigidity would be achieved by placing two four pronged staples **800** on both sides totaling sixteen prongs. Intermediate degrees of relative joint motion can be modulated by insertion into the cervical facet joints staples in two-four prong increments from 2-16. Each additional prong further limits the degree of facet joint motion hence increasing rigidity, and conversely decreasing flexibility. Thus the novel modular use of these embodiments heralds an era of flexible cervical spine fusion.

FIGS. **12**A-B illustrate a lumbar facet joint staple **1200** in open and closed positions and having staple prongs **1203**. This lumbar facet staple has been thoroughly described in our previous co-pending patent application Ser. No. 11/536,815, filed on Sep. 29, 2006, and Ser. No. 11/208,644, filed on Aug. 23, 2005, the relevant portion of each of which is hereby incorporated by reference hereinafter. The new improvement of this device includes a ratchet **1201**. The staple **1200** can be incrementally closed with increased ratcheting over increasing number of spurs **1202**. This achieves increasing calibrated levels of lumbar facet joint fusion, and conversely diminishing joint flexibility. This new designs further enhances the capacity to achieve flexible fusions in the lumbar spine.

2. The Surgical Method

Exemplary surgical steps for practicing one or more of the foregoing embodiments will now be described.

The posterior lumbar spine implantation of all the screw box **100**, **200**, **300** embodiments, with BDFT screws, and horizontal mini-plate **400** can be implanted via previously described posterior lumbar interbody fusion (PLIF) or posterior transforaminal lumbar interbody fusion (TLIF) procedures. The procedures can be performed open, microscopic, closed tubular or endoscopic. Fluoroscopic guidance can be used with any of these procedures.

After adequate induction of anesthesia, the patient is placed in the prone position. A midline incision is made for a PLIF procedure, and one or two parallel paramedian incisions or a midline incision is made for the TLIF procedure. For the PLIF, a unilateral or bilateral facet sparing hemi-laminotomy is created to introduce screw box **100**, **200**, **300** embodiments I-III into the disc space, after it is adequately prepared.

For the TLIF procedure, after unilateral or bilateral dissection and drilling of the inferior articulating surface and the medial superior articulating facet the far lateral disc space is entered and a circumferential discectomy is performed. The disc space is prepared and the endplates exposed.

Then one screw box **100**, **200**, **300** of either embodiments I-III is placed on either right, left or both sides. Then another screw box of embodiments **100**, **200**, **300** I-III is placed on the contralateral side. For embodiment I the external screw guide **505**/box expander is attached to the screw box (FIGS. **5**A-H). First the Allen key **501** is screwed until the box conforms perfectly to the height and depth of the space. Then a pilot hole can be drilled or an awl can start a pilot hole in the vertebral bodies. Then a transvertebral screw is screwed into the vertebral body via the built-in box screw guides **505**. For difficult angles, an angled screw driver can be employed.

For embodiments II-III the same method is used for placing screws, except the Allen key **501** is not utilized in the absence of plate expansion.

If bilateral constructs have been inserted, bone is packed into the intervertebral space, as well as within the device. Then the horizontal intervertebral zero profile mini-plate **400** is slid beneath the thecal sac and is secured to both left and right screw boxes with small mini-plate screws **210** (FIGS. **4**A-B). This prevents bone intrusion into the thecal sac and hence possible nerve root compression.

FIGS. **6**A and B illustrate the process of insertion and final placement of the construct into the lumbar spine. The mini-plates **400** can come in different horizontal lengths and widths to accommodate different intra and inter-patient disc space diameters. The BDFT screws can come in different widths, lengths and thread designs.

The anterior thoracic and lumbar spine implantation of one, two or three screw box constructs **100**, **200**, **300** and BDFT screws can be performed in a similar manner to the posterior application. Likewise, a horizontal mini-plate **400** can be used to cap two or three screw box constructs **100**, **200**, **300** (one placed midline deeply, one placed left and one placed right, forming a triangulation). Alternatively two screw box constructs may be placed into a circumferential ring for anterior placement. Anterior placement of these devices can be performed into the L4/5 and L5/S1 spaces on the supine anesthetized patient via previously described open microscopic or endoscopic techniques. Once the disc space is exposed and discectomy and space preparation are performed, placement of one, two or three screw box embodiments **100**, **200**, **300** (I-III) or a 2 in I construct can be placed. The screw placement is facilitated by the internal screw guides, and different positioning tools ((FIG. **5**). A right angled screw driver and/or ratchet could alternatively be employed A capping mini-plate **400** may be applied if desirable. The mechanism of screw placement and mini-plate **400** attachment are identical to what was described above.

The posterior placement of screw box constructs **100**, **200**, **300** alone or combined with horizontal mini-plates **400** into the thoracic spine can be performed via previously described transpedicular approaches; open or endoscopic. The anterior placement into the thoracic spine can be accomplished via a trans-thoracic approach. Once the disc space is exposed via either approach, any combination of the above mention Embodiments (I-III) can be inserted. Engagement of the devices is identical to what was mentioned above.

For posterior placement of cervical facet staple **700**, **800** embodiments, after adequate induction of anesthesia the patient is flipped prone and his head and neck secured. A single midline or two para-median incisions are made for unilateral or bilateral or multilevel placement of staples. Ultimately the facet joint is exposed. Alternatively and preferably this can be performed percutaneously under fluoroscopic guidance with intravenous sedation. The staple **700**, **800** (Embodiments I or II) is loaded into the impactor **900**, **1000**. The staple **700**, **800** is placed on the two articulating cervical facets, and then impacted into the joint. To achieve modular calibrated fusion different combinations and permutations of cervical facet stales can be inserted ranging from a single unilateral two pronged staple providing a high degree of flexibility to a total of four bilaterally placed four pronged staples **800** (16 prongs) leading to the highest degree of rigidity. Additional bone may or may not be placed in its vicinity to facilitate permanent and solid fusion. This procedure can be performed open, closed, percutaneously, tubulary, endoscopically or microscopically. FIGS. **11**A-C illustrates placement of the staples **700**, **800** in the cervical spine.

We have previously described surgical placement of the lumbar facet joint staple in our two co-pending patents. The surgical procedure for this device is identical to that which has been previously mentioned.

The present inventions may provide effective and safe techniques that overcome the problems associated with current transpedicular based cervical, thoracic and lumbar fusion technology, and for many degenerative stable and unstable spine disease. These inventions could replace much pedicle screw-based instrumentation in many but not all degenerative spine conditions.

The speed and simplicity of placement of cervical and lumbar facet staples, and placement of Lumbar screw box-BDFT constructs far exceeds that of current pedicle screw technology. Furthermore, these devices have markedly significantly decreased risk of misguided screw placement, and hence decreased risk of neural and vascular injury, and blood loss. In the lumbar spine BDFT screw constructs and facet staples could be applied modularly in different combinations to achieve different degrees of rigidity (flexibility). Patients having these devices would have decreased recovery and back to work time. These devices most likely lead to similar if not equal fusion with significantly less morbidity, and hence overall make them a major advance in the evolution of spinal instrumented technology leading to advances in the care of the spinal patient.

Another major novelty and advance is the introduction of simple and safe modular calibrated cervical flexible fusion. To our knowledge neither a similar device nor a similar mathematical concept of modular joint flexibility/fusion calibration has been postulated for the cervical spine or for any other articulating joint.

To our knowledge there have not been any previously described similar posterior lumbar and thoracic combined spacer and screw constructs. These devices can similarly be modified to stabilize bone fractures throughout the entire body. To our knowledge the description of zero to subzero

profile anterior or posterior horizontal spinal plates which traverse the diameter of the disc space has not been previously described.

We claim:

1. A universal, intervertebral combination internal screw guide and fixation apparatus configured to be inserted into a disc space between a first vertebral body and a second vertebral body and to provide fusion of the first vertebral body to the second vertebral body via biological bone fusion and screw fusion, the apparatus comprising:

an intervertebral cage including:

a top wall, a bottom wall, and two sidewalls defining an open space capable of receiving bone filling for the biological bone fusion; and

an internal screw guide having an internal bore with an entry opening and an exit opening, the entry opening of the internal bore formed only in a top surface of the top wall and the exit opening formed at least partially in a bottom surface of the top wall and at least partially in a side surface of the top wall,

wherein the side surface of the top wall is patterned with a plurality of surface features to create a rough side surface, wherein at least some of the plurality of surface features are positioned on the side surface closer to the top surface of the top wall than the exit opening,

wherein a threaded hole extends through the top wall in a direction substantially normal to the top surface of the top wall with a diameter of the threaded hole being smaller than a diameter of the internal screw guide, and

wherein a rectangular indentation extends into at least part of the top wall and is oriented with at least one side of the rectangular indentation being substantially parallel to the side surface of the top wall.

2. The apparatus of claim **1**, wherein an internal surface of the internal screw guide extends continuously from the entry opening to the exit opening.

3. The apparatus of claim **1**, wherein the internal screw guide extends through an entire depth of the top wall from the top surface to the bottom surface and exiting at least partially into the open space.

4. The apparatus of claim **1**, wherein the internal screw guide permits only a predetermined angled trajectory of a screw member through the intervertebral cage.

5. The apparatus of claim **1**, wherein the internal screw guide has a 25 degree angulation.

6. The apparatus of claim **1**, wherein the top wall has a thickness extending from the top surface of the top wall to the bottom surface of the top wall in a direction of a depth of the intervertebral cage, a height of the intervertebral cage extending in a direction perpendicular to the depth, and

wherein an axis of the internal screw guide extends to a greater extent in the direction of the depth of the intervertebral cage than in a direction of a height of the intervertebral cage in order to facilitate multi-level fusion of adjacent vertebral bodies with multiple intervertebral cages.

7. The apparatus of claim **1**, wherein the top wall of the intervertebral cage has a thickness that is greater than a thickness of each of the sidewalls.

8. The apparatus of claim **1**, wherein each of the two sidewalls includes a means for receiving placement of bone filling into the open space of the intervertebral cage for the biological bone fusion.

9. The apparatus of claim **1**, wherein the intervertebral cages includes indentations formed on surfaces of the two sidewalls and on opposite ends of the intervertebral cage for receiving ends of prongs of an implantation tool.

10. The apparatus of claim **1**, wherein a surface of each of the two sidewalls includes a plurality of ridges.

11. The apparatus of claim **1**, wherein the intervertebral cage is configured to receive a means for securing a second intervertebral cage thereto.

12. The apparatus of claim **11**, wherein the intervertebral cage comprises:

a screw insert configured to receive the plate for securing the second intervertebral cage thereto.

13. The apparatus of claim **1**, wherein the intervertebral cage is a cervical intervertebral cage configured to fit into a cervical disc space.

14. The apparatus of claim **1**, wherein the intervertebral cage is a lumbar intervertebral cage configured to fit into a lumbar disc space.

15. The apparatus of claim **1**, wherein the intervertebral cage is a posterior lumbar intervertebral cage configured to fit into a lumbar disc space.

16. The apparatus of claim **1**, wherein the intervertebral cage is capable of one of posterior lumbar intervertebral placement, anterior lumbar intervertebral placement, thoracic intervertebral placement, and anterior cervical intervertebral placement.

17. The apparatus of claim **1**, wherein the intervertebral cage further comprises:

a second internal screw guide having a second entry opening and a second exit opening, the second entry opening formed at least partially in the top surface of the top wall and the second exit opening formed at least partially in the bottom surface of the top wall and at least partially in a second side surface of the top wall.

18. The apparatus of claim **17**, wherein each of the internal screw guide and the second internal screw guide is angled to orient a first screw member and a second screw bi-directionally in opposite directions.

19. The apparatus of claim **18**, wherein the internal screw guide is configured to orient the first screw member rostrally and the second internal screw guide is configured to orient the second screw member caudally.

20. The apparatus of claim **17**, wherein the internal screw guide and the second internal screw guide are at an angulation with respect to the top surface of the top wall.

21. The apparatus of claim **17**, wherein each of the internal screw guide and the second internal screw guide permits only a 25 degree angulation of the first screw member and the second screw member.

22. The apparatus of claim **17**, wherein the internal screw guide and the second internal screw guide are aligned along a longitudinal axis of the top wall of the intervertebral cage.

23. The apparatus of claim **17**, wherein the internal screw guide and the second internal screw guide are symmetrically disposed on each side of a center point of the intervertebral cage along a longitudinal axis of the top wall of the intervertebral cage.

24. The apparatus of claim **17**, wherein the internal screw guide and the second internal screw guide are offset in opposite directions with respect to a center line of a longitudinal extent of the top wall.

25. The apparatus of claim **24**, wherein a part of the internal screw guide overlaps a part of the second internal screw guide along the longitudinal extent of the top wall.

26. The apparatus of claim **17**, wherein the entry opening of the internal screw guide and the second entry opening of the second internal screw guide are arranged diagonally on the top surface of the top wall.

27. The apparatus of claim 17, wherein the top wall has four quadrants delineated by a first axis and a second axis each lying in a plane of the top wall, and the first axis is at a right angle with respect to the second axis,

wherein the four quadrants include a first quadrant, a second quadrant, a third quadrant, and a fourth quadrant,

wherein the first quadrant and the fourth quadrant are opposed to the second quadrant and the third quadrant with respect to the first axis, and the first quadrant and the second quadrant are opposed to the third quadrant and the fourth quadrant with respect to the second axis,

wherein the first quadrant is diagonally opposed to the third quadrant, and the second quadrant is diagonally opposed to the fourth quadrant, and

wherein a majority of an area of the entry opening of the internal screw guide is in the first quadrant and a majority of an area of the second entry opening of the second internal screw guide is in the third quadrant.

28. The apparatus of claim 17, wherein the top wall has four quadrants delineated by a first axis and a second axis each lying in a plane of the first wall, and the first axis is at a right angle with respect to the second axis,

wherein the four quadrants include a first quadrant, a second quadrant, a third quadrant, and a fourth quadrant,

wherein the first quadrant and the fourth quadrant are opposed to the second quadrant and the third quadrant with respect to the first axis, and the first quadrant and the second quadrant are opposed to the third quadrant and the fourth quadrant with respect to the second axis,

wherein the first quadrant is diagonally opposed to the third quadrant, and the second quadrant is diagonally opposed to the fourth quadrant, and

wherein a center of the entry opening of the internal screw guide is in the first quadrant and a center of the second entry opening of the second internal screw guide is in the third quadrant.

29. The apparatus of claim 17, wherein the top wall includes a first corner and a second corner, the first corner being arranged at an opposite side of the top wall and an opposite end of the top wall with respect to the second corner, and

wherein the internal screw guide and the second internal screw guide are diagonally arranged along a direction extending from the first corner of the top wall to the second corner of the top wall.

30. The apparatus of claim 17, wherein the intervertebral cage further comprises:

a third internal screw guide having a third entry opening and a third exit opening, the third entry opening formed at least partially in the top surface of the top wall and the third exit opening formed at least partially in the bottom surface of the top wall and at least partially in the side surface of the top wall.

31. The apparatus of claim 30, wherein the intervertebral cage further comprises:

a fourth internal screw guide having a fourth entry opening and a fourth exit opening, the fourth entry opening formed at least partially in the top surface of the top wall and the fourth exit opening formed at least partially in the bottom surface of the top wall and at least partially in the second side surface of the top wall.

32. The apparatus of claim 31, wherein the internal screw guide and the fourth internal screw guide are oriented rostrally and the second internal screw guide and the third internal screw guide are oriented caudally.

33. The apparatus of claim 31, wherein the second internal screw guide and the third internal screw guide are disposed between the internal screw guide and the fourth internal screw guide along a longitudinal length of the top wall of the intervertebral cage.

34. The apparatus of claim 31, wherein each of the internal screw guide, the second internal screw guide, the third internal screw guide, and the fourth internal screw guide has a 25 degree angulation.

35. The apparatus of claim 1, further comprising:

a second intervertebral cage including:

a top wall, a bottom wall, and two sidewalls defining an open space capable of receiving bone filling for biological bone fusion, and

an internal screw guide having an entry opening and an exit opening, the entry opening of the second intervertebral cage formed at least partially in a top surface of the top wall of the second intervertebral cage and the exit opening formed at least partially in a bottom surface of the top wall of the second intervertebral cage and at least partially in a side surface of the top wall of the second intervertebral cage; and

an attachment member coupling the intervertebral cage to the second intervertebral cage.

36. The apparatus of claim 1, wherein the exit opening is formed at least partially in a surface of one of the two sidewalls.

37. The apparatus of claim 1, wherein the internal screw guide includes:

a counterbore formed at least partially in the top surface of the top wall for accommodating a screw head of a screw member, wherein the internal bore is configured to continuously guide a body of the screw member through the internal screw guide into the open space and into the first vertebral body, wherein the entry opening of the internal bore is formed in a lower surface of the counterbore.

38. The apparatus of claim 37, wherein the internal bore is coaxial with the counterbore.

39. The apparatus of claim 1, wherein the expandable cage is formed from at least first and second parts that combine to form the top wall, the bottom wall, and the two sidewalls, wherein the first part defines the top wall and the second part defines the bottom wall and at least part of the side walls, wherein the surface features are present on both the first and second parts.

40. The apparatus of claim 1, wherein the side surface of the top wall and side surfaces of the side walls are perpendicular to the top surface.

41. The apparatus of claim 1, wherein the plurality of surface features are patterned all the way to the top surface of the top wall such that at least one or more of the surface features are positioned on the side surface of the top wall adjacent to the top surface of the top wall.

42. A universal, intervertebral combination internal screw guide and fixation apparatus configured to be inserted into a disc space between a first vertebral body and a second vertebral body and to provide fusion of the first vertebral body to the second vertebral body via biological bone fusion and screw fusion, the apparatus comprising:

an intervertebral cage including:

a top wall, a bottom wall, and two sidewalls defining an open space capable of receiving bone filling for the biological bone fusion;

an internal screw guide having an internal bore with an entry opening and an exit opening, the entry opening

of the internal bore formed only in a top surface of the top wall and the exit opening formed at least partially in a bottom surface of the top wall and at least partially in a side surface of the top wall;

a second internal screw guide having a second internal bore with a second entry opening and a second exit opening, the second entry opening of the second internal bore formed only in the top surface of the top wall and the second exit opening formed at least partially in the bottom surface of the top wall and at least partially in a second side surface of the top wall; and

a circular hole extending into the top wall in a direction substantially normal to the top surface of the top wall and positioned between the internal screw guide and the second internal screw guide at the top surface of the top wall,

wherein the expandable cage is formed from at least first and second parts that combine to form the top wall, the bottom wall, and the two sidewalls, wherein the first part defines at least part of the top wall and the side walls and the second part defines the at least part of bottom wall and the side walls.

43. The apparatus of claim **42**, wherein the exit opening is formed partially in the surface of the one of the two sidewalls.

44. The apparatus of claim **42**, wherein a diameter of the circular hole is smaller than a diameter of the internal screw guide and the second internal screw guide, wherein a rectangular indentation extends into at least part of the top surface of the top wall and is oriented with at least one side of the rectangular indentation being substantially parallel to the side surface of the top wall, and wherein both the circular hole and the rectangular indentation are positioned between the internal screw guide and the second internal screw guide at the top surface of the top wall.

45. The apparatus of claim **42**, wherein the side surface of the top wall is patterned with a plurality of surface features to create a rough side surface adjacent the exit opening.

46. The apparatus of claim **42**, wherein the open space for receiving bone graft material extends continuously from a first of the two sidewalls to a second of the two sidewalls.

47. A universal, intervertebral combination internal screw guide and fixation apparatus configured to be inserted into a disc space between a first vertebral body and a second vertebral body and to provide fusion of the first vertebral body to the second vertebral body via biological bone fusion and screw fusion, the apparatus comprising:

an intervertebral cage including:

a top wall, a bottom wall, and two sidewalls defining an open space capable of receiving bone filling for the biological bone fusion;

an internal screw guide having an internal bore with an entry opening and an exit opening, the entry opening of the internal bore formed only in a top surface of the top wall and the exit opening formed at least partially in a bottom surface of the top wall and at least partially in a side surface of the top wall, wherein the internal screw guide further includes a counterbore that is larger than and coaxial with the internal bore and has a counterbore entry opening that is formed only in the top surface of the top wall;

a second internal screw guide having a second internal bore with a second entry opening and a second exit opening, the second entry opening of the second internal bore formed only in the top surface of the top wall and the second exit opening formed at least partially in the bottom surface of the top wall and at least partially in a second side surface of the top wall; and

a circular hole extending through the top wall in a direction substantially normal to the top surface of the top wall, wherein the circular hole is positioned between the internal screw guide and the second internal screw guide at the top surface of the top wall.

48. The apparatus of claim **47**, wherein the intervertebral cage includes a rectangular indentation extending into at least part of the top wall and oriented with at least one side of the rectangular indentation being substantially parallel to the side surface of the top wall, wherein the rectangular indentation is positioned between the internal screw guide and the second internal screw guide at the top surface of the top wall.

49. The apparatus of claim **47**, wherein the side surface of the top wall comprises means to facilitate integration and fusion with superior and inferior vertebral bodies.

50. The apparatus of claim **49**, wherein the means is positioned at least partially on the side surface closer to the top surface of the top wall than the exit opening.

51. The apparatus of claim **47**, wherein an internal surface of the internal screw guide extends continuously from the entry opening to the exit opening.

52. The apparatus of claim **47**, wherein the internal screw guide extends through an entire depth of the top wall from the top surface to the bottom surface and exiting at least partially into the open space.

53. The apparatus of claim **47**, wherein the internal screw guide permits only a predetermined angled trajectory of a screw member through the intervertebral cage.

54. The apparatus of claim **47**, wherein the internal screw guide has a **25** degree angulation.

55. The apparatus of claim **47**, wherein the top wall has a thickness extending from the top surface of the top wall to the bottom surface of the top wall in a direction of a depth of the intervertebral cage, a height of the intervertebral cage extending in a direction perpendicular to the depth, and

wherein an axis of the internal screw guide extends to a greater extent in the direction of the depth of the intervertebral cage than in a direction of a height of the intervertebral cage in order to facilitate multi-level fusion of adjacent vertebral bodies with multiple intervertebral cages.

56. The apparatus of claim **47**, wherein the top wall of the intervertebral cage has a thickness that is greater than a thickness of each of the sidewalls.

57. The apparatus of claim **47**, wherein each of the two sidewalls includes a means for receiving placement of bone filling into the open space of the intervertebral cage for the biological bone fusion.

58. The apparatus of claim **47**, wherein the intervertebral cages includes indentations formed on surfaces of the two sidewalls and on opposite ends of the intervertebral cage for receiving ends of prongs of an implantation tool.

59. The apparatus of claim **47**, wherein a surface of each of the two sidewalls includes a plurality of ridges.

60. The apparatus of claim **47**, wherein the intervertebral cage is a cervical intervertebral cage configured to fit into a cervical disc space.

61. The apparatus of claim **47**, wherein each of the internal screw guide and the second internal screw guide is angled to orient a first screw member and a second screw bi-directionally in opposite directions.

62. The apparatus of claim **61**, wherein the internal screw guide is configured to orient the first screw member rostrally and the second internal screw guide is configured to orient the second screw member caudally.

63. The apparatus of claim **47**, wherein the internal screw guide and the second internal screw guide are at an angulation with respect to the top surface of the top wall.

64. The apparatus of claim **47**, wherein each of the internal screw guide and the second internal screw guide permits only a 25 degree angulation of the first screw member and the second screw member.

65. The apparatus of claim **47**, wherein the internal screw guide and the second internal screw guide are aligned along a longitudinal axis of the top wall of the intervertebral cage.

66. The apparatus of claim **47**, wherein the internal screw guide and the second internal screw guide are symmetrically disposed on each side of a center point of the intervertebral cage along a longitudinal axis of the top wall of the intervertebral cage.

67. The apparatus of claim **47**, wherein the internal screw guide and the second internal screw guide are offset in opposite directions with respect to a center line of a longitudinal extent of the top wall.

68. The apparatus of claim **47**, wherein the top wall has four quadrants delineated by a first axis and a second axis each lying in a plane of the top wall, and the first axis is at a right angle with respect to the second axis,

wherein the four quadrants include a first quadrant, a second quadrant, a third quadrant, and a fourth quadrant,

wherein the first quadrant and the fourth quadrant are opposed to the second quadrant and the third quadrant with respect to the first axis, and the first quadrant and the second quadrant are opposed to the third quadrant and the fourth quadrant with respect to the second axis,

wherein the first quadrant is diagonally opposed to the third quadrant, and the second quadrant is diagonally opposed to the fourth quadrant, and

wherein a majority of an area of the entry opening of the internal screw guide is in the first quadrant and a majority of an area of the second entry opening of the second internal screw guide is in the third quadrant.

69. The apparatus of claim **47**, wherein the top wall has four quadrants delineated by a first axis and a second axis each lying in a plane of the first wall, and the first axis is at a right angle with respect to the second axis,

wherein the four quadrants include a first quadrant, a second quadrant, a third quadrant, and a fourth quadrant,

wherein the first quadrant and the fourth quadrant are opposed to the second quadrant and the third quadrant with respect to the first axis, and the first quadrant and the second quadrant are opposed to the third quadrant and the fourth quadrant with respect to the second axis,

wherein the first quadrant is diagonally opposed to the third quadrant, and the second quadrant is diagonally opposed to the fourth quadrant, and

wherein a center of the entry opening of the internal screw guide is in the first quadrant and a center of the second entry opening of the second internal screw guide is in the third quadrant.

70. The apparatus of claim **47**, wherein the intervertebral cage further comprises:

a third internal screw guide having a third entry opening and a third exit opening, the third entry opening formed at least partially in the top surface of the top wall and the third exit opening formed at least partially in the bottom surface of the top wall and at least partially in the side surface of the top wall; and

a fourth internal screw guide having a fourth entry opening and a fourth exit opening, the fourth entry opening formed at least partially in the top surface of the top wall and the fourth exit opening formed at least partially in the bottom surface of the top wall and at least partially in the second side surface of the top wall, wherein the internal screw guide and the fourth internal screw guide are oriented rostrally and the second internal screw guide and the third internal screw guide are oriented caudally.

* * * * *