US 20110066009A1

(19) United States

(12) Patent Application Publication

(10) Pub. No.: US 2011/0066009 A1

(43) Pub. Date: Mar. 17, 2011

Moon et al.

(54) BODY-WORN VITAL SIGN MONITOR

(76) Inventors: **Jim Moon**, Portland, OR (US); **Henk Visser**, San Diego, CA (US); **Robert Hunt**, Vista, CA (US)

(21) Appl. No.: **12/560,087**

(22) Filed: **Sep. 15, 2009**

Publication Classification

(51) **Int. Cl.**

A61B 5/02	(2006.01)
A61B 5/0402	(2006.01)
A61M 31/00	(2006.01)
A61M 16/00	(2006.01)

(52) **U.S. Cl.** **600/301**; 600/509; 604/65; 128/204.21

(57) **ABSTRACT**

The invention provides a body-worn monitor featuring a processing system that receives a digital data stream from an ECG system. A cable houses the ECG system at one terminal end, and plugs into the processing system, which is worn on the patient's wrist like a conventional wristwatch. The ECG system features: i) a connecting portion connected to multiple electrodes worn by the patient; ii) a differential amplifier that receives electrical signals from each electrode and process them to generate an analog ECG waveform; iii) an analog-to-digital converter that converts the analog ECG waveform into a digital ECG waveform; and iv) a transceiver that transmits a digital data stream representing the digital ECG waveform (or information calculated from the waveform) through the cable and to the processing system. Different ECG systems, typically featuring three, five, or twelve electrodes, can be interchanged with one another.

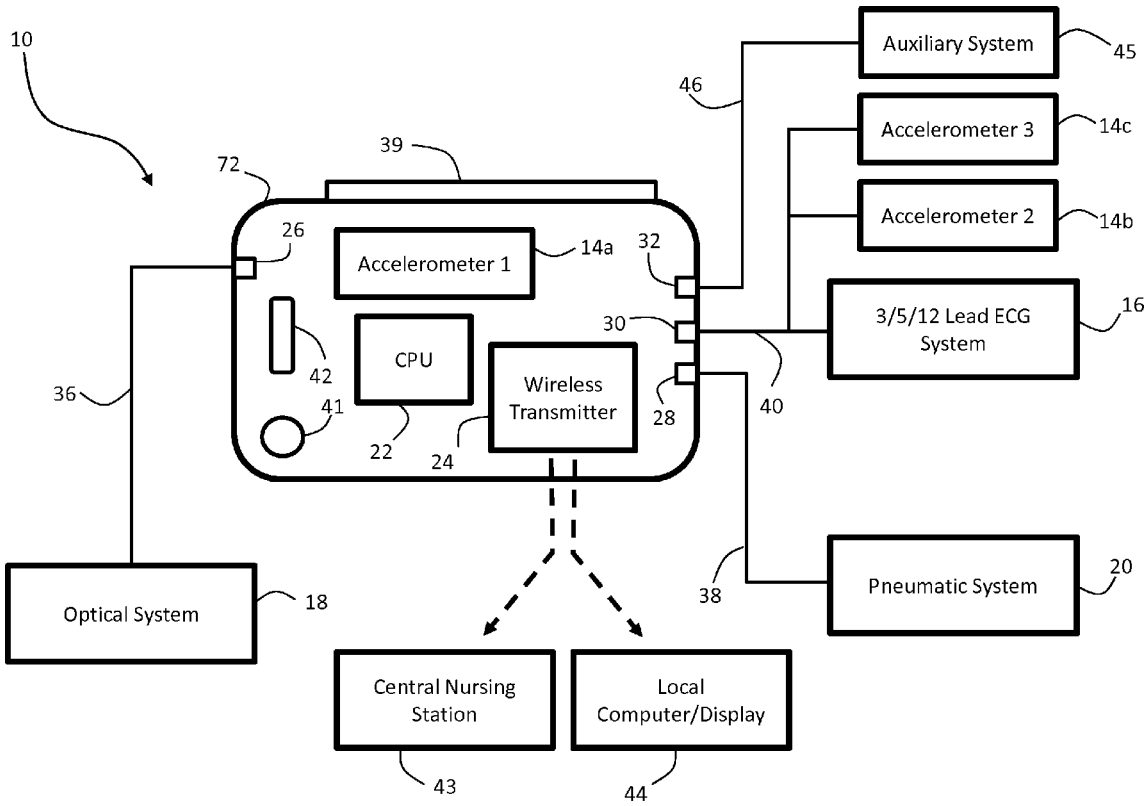

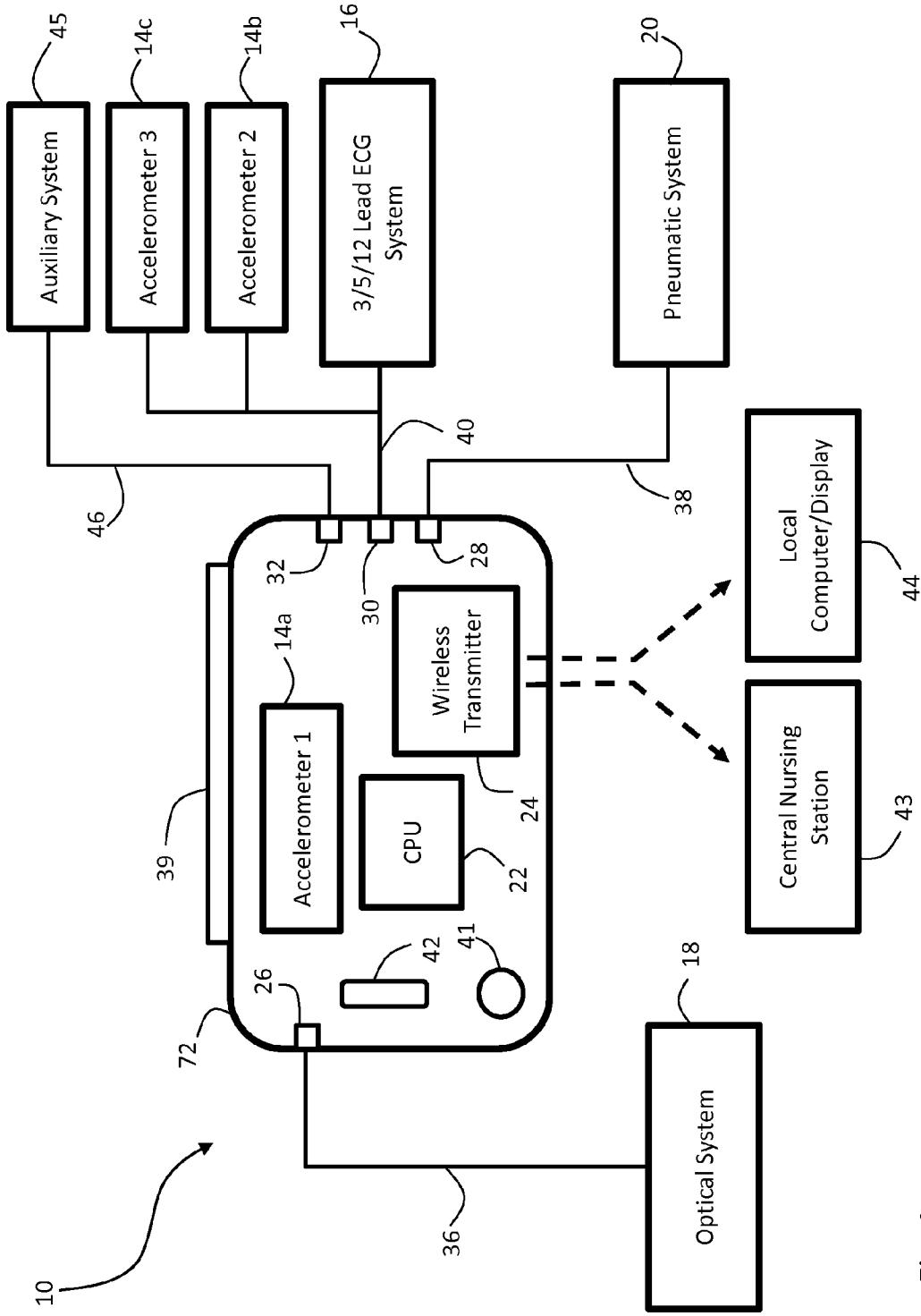
Auxiliary System
Accelerometer 3
Accelerometer 2
3/5/12 Lead ECG System
Pneumatic System
Local Computer/Display
Central Nursing Station
Optical System
Wireless Transmitter
CPU
Accelerometer 1
45
14c
14b
16
20
40
46
38
32
30
28
14a
24
22
39
42
41
26
72
18
36
10
44
43

Fig. 1

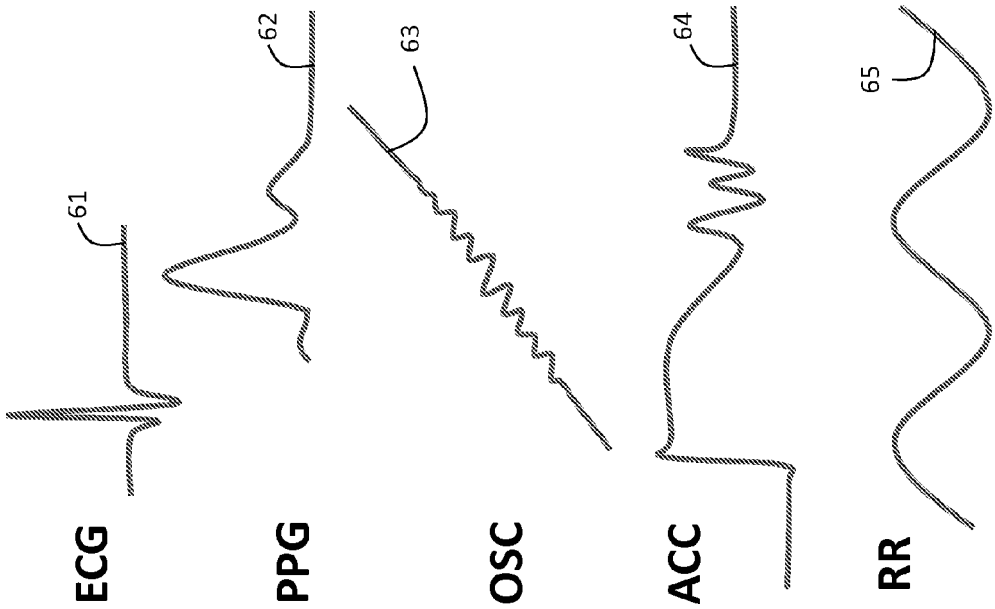
ECG
PPG
OSC
ACC
RR
61
62
63
64
65

Fig. 3

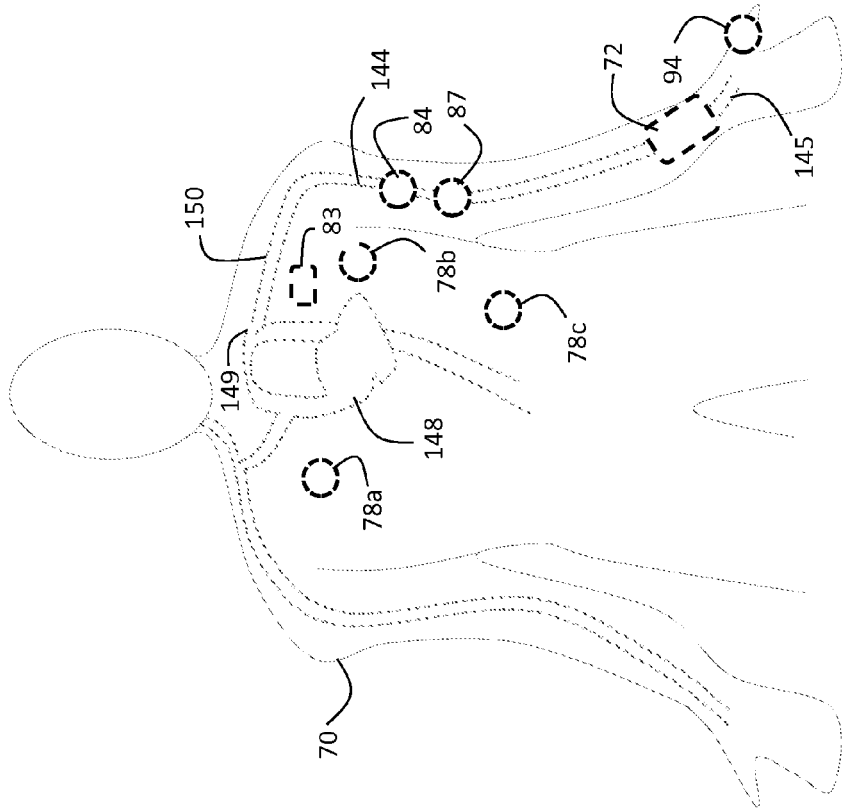
70
78a
148
149
150
83
78b
78c
144
84
87
72
94
145

Fig. 2

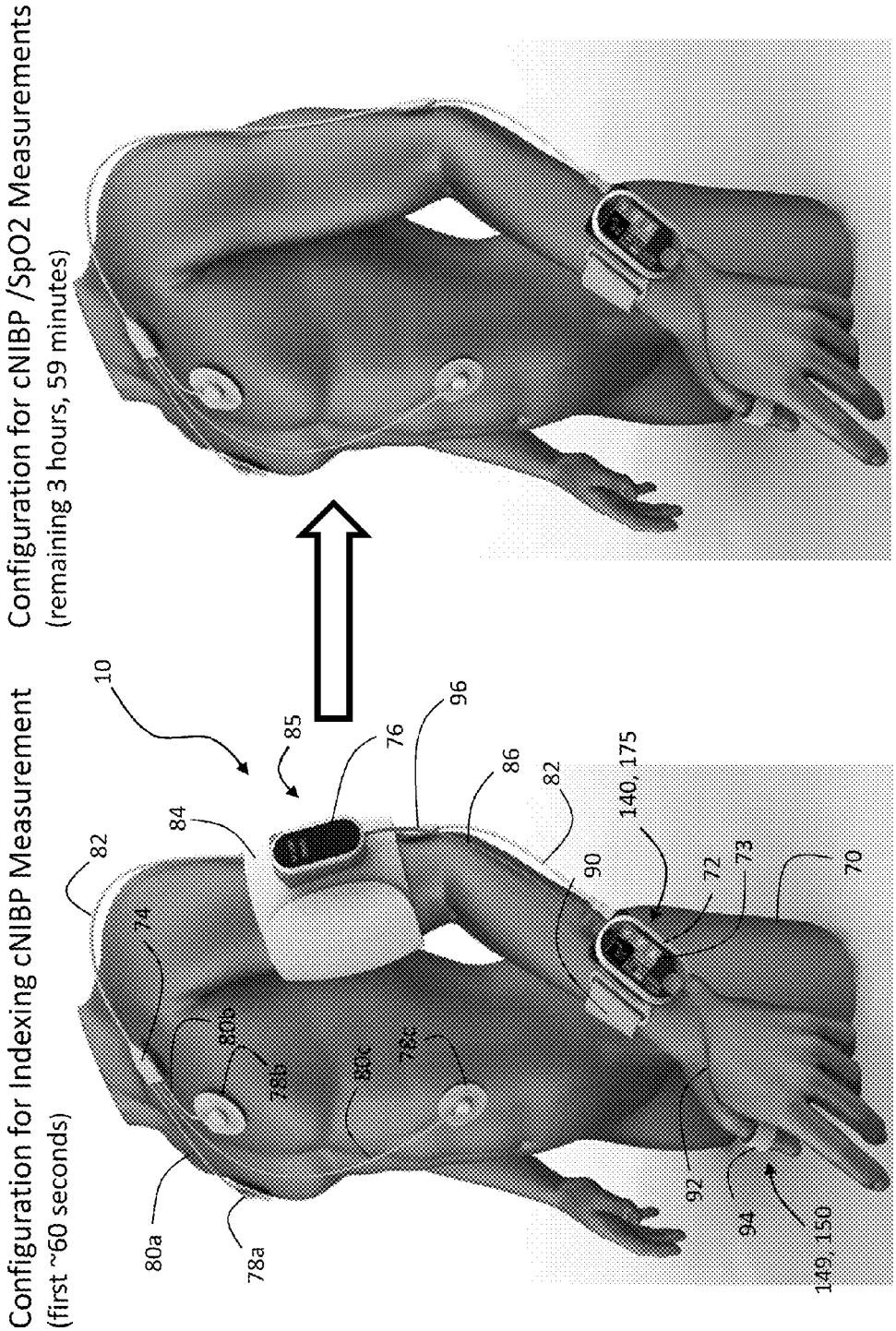
Configuration for Indexing cNIBP Measurement
(first ~60 seconds)
Configuration for cNIBP /SpO2 Measurements
(remaining 3 hours, 59 minutes)
10
82
74
80b
78b
80c
78c
80a
78a
84
85
76
96
86
82
90
140, 175
72
73
70
92
94
149, 150

Fig. 4A

Fig. 4B

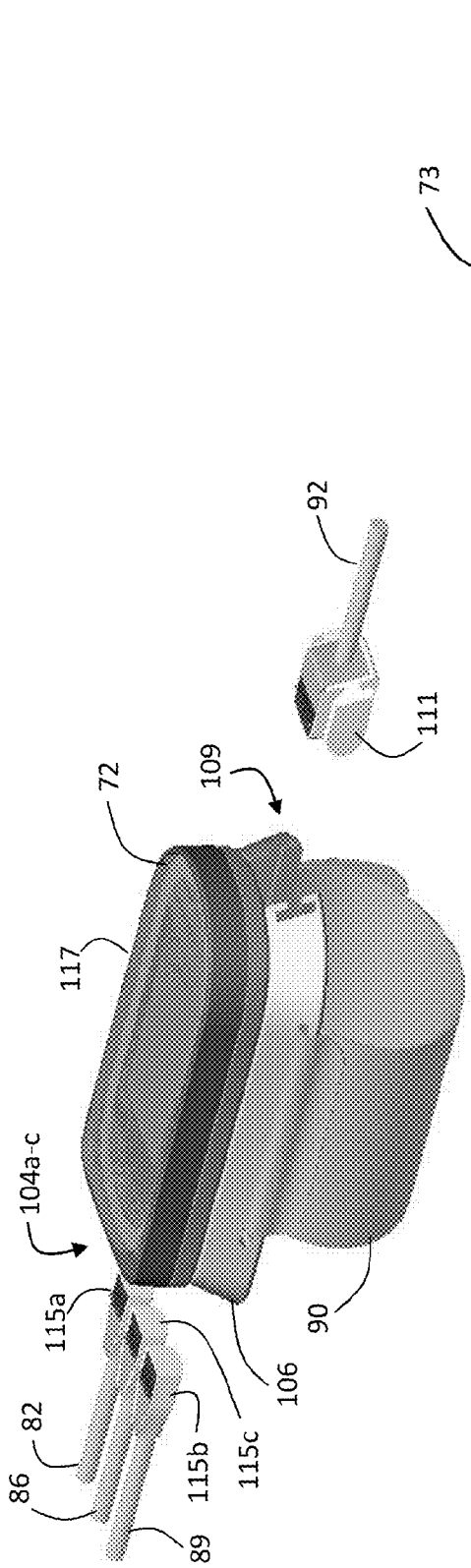

Fig. 5A

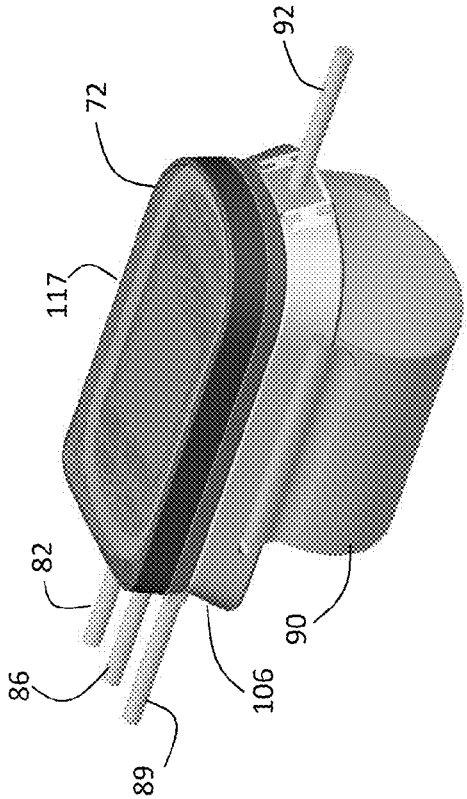

Fig. 5B

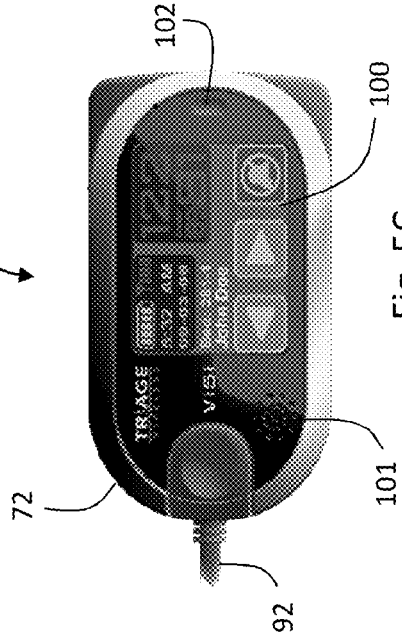

Fig. 5C

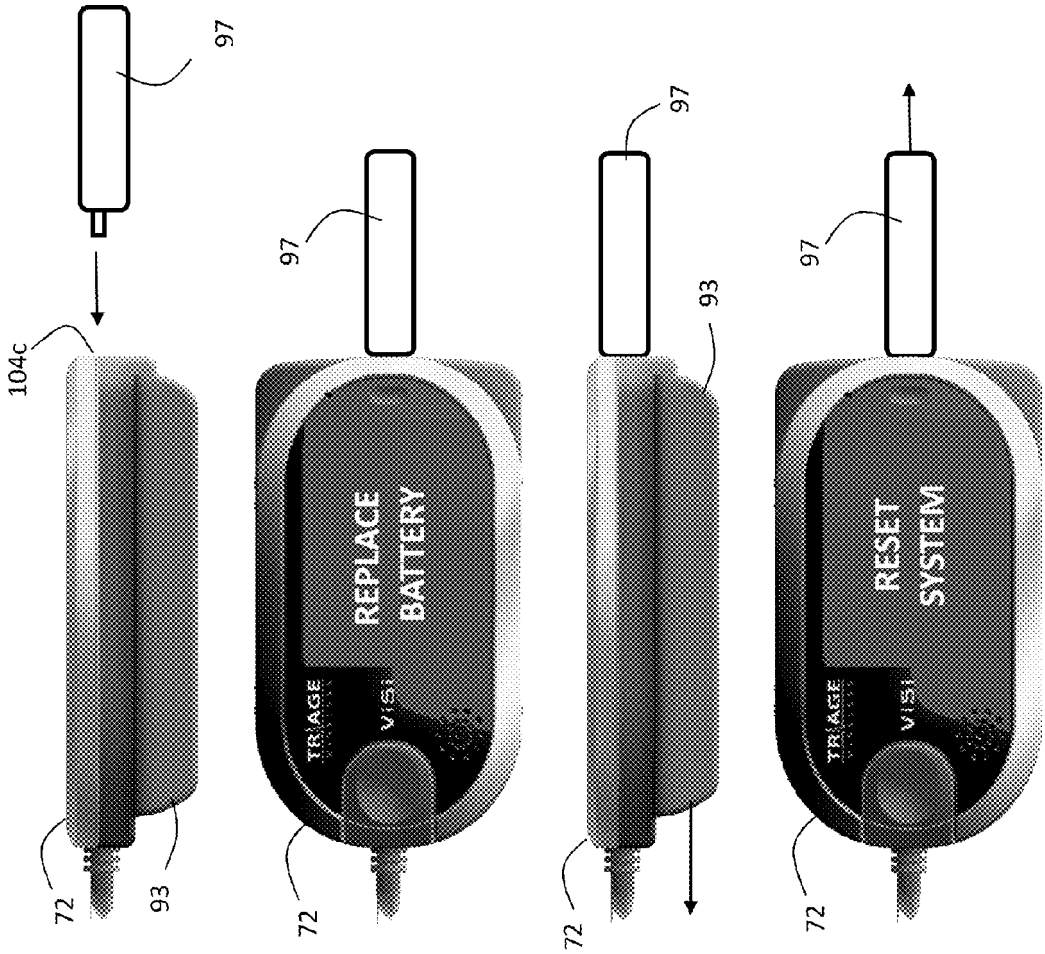

Fig. 6A

Fig. 6B

Fig. 6C

Fig. 6D

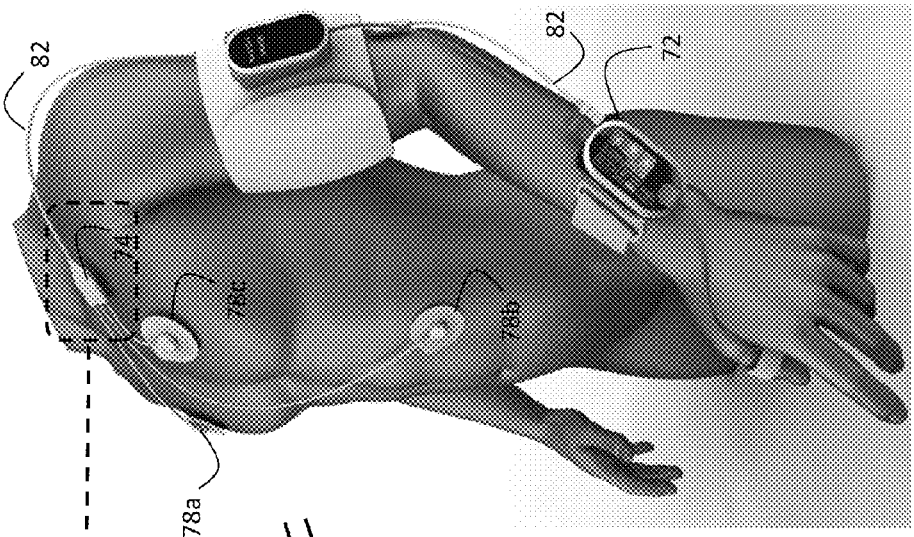
82
74
78c
78b
78a
82
72

Fig. 7A

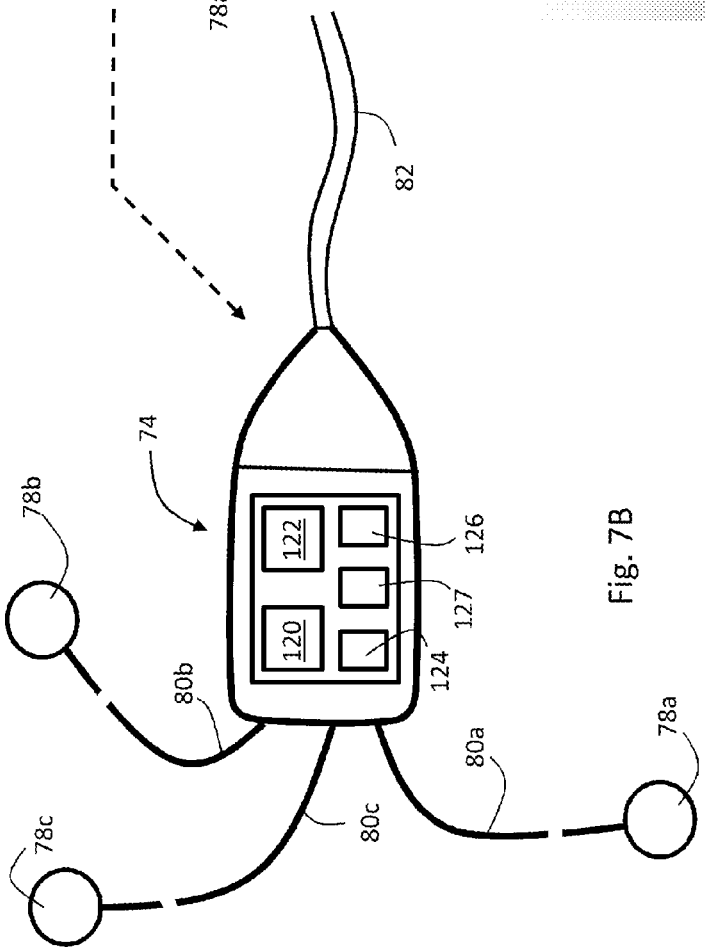
82
74
78b
78c
80b
80c
80a
78a
120
122
124
126
127

Fig. 7B

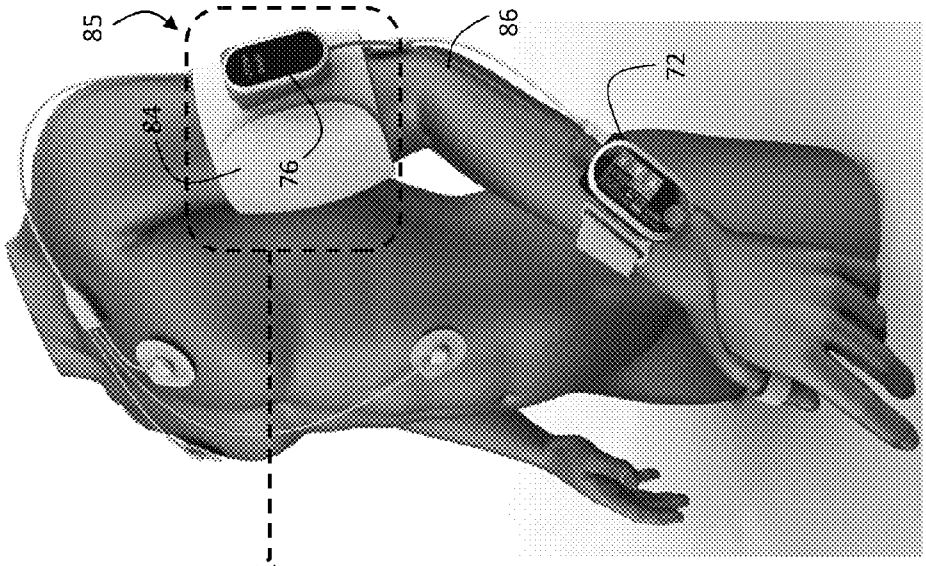

Fig. 8A

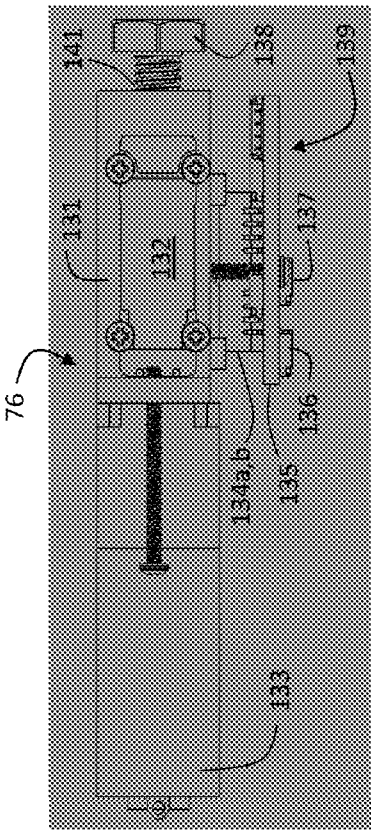

Fig. 8B

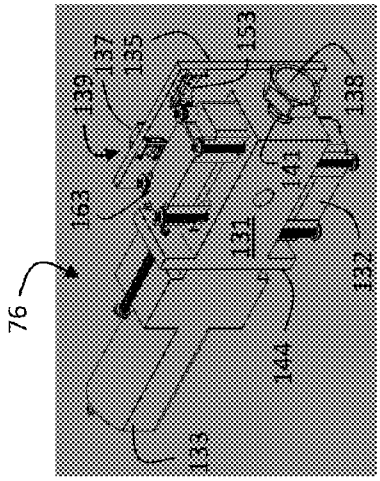

Fig. 8C

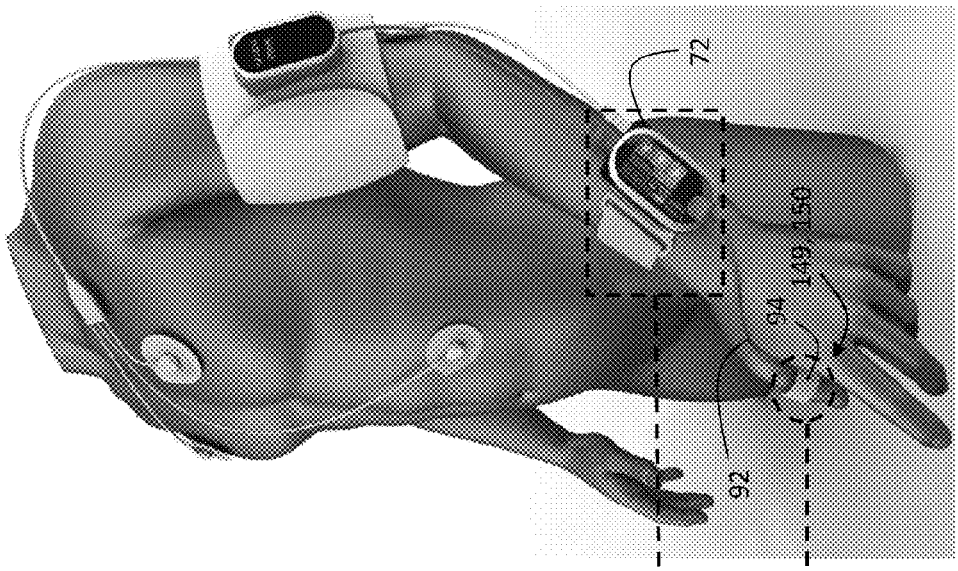
72
92
94
149
150

Fig. 9A

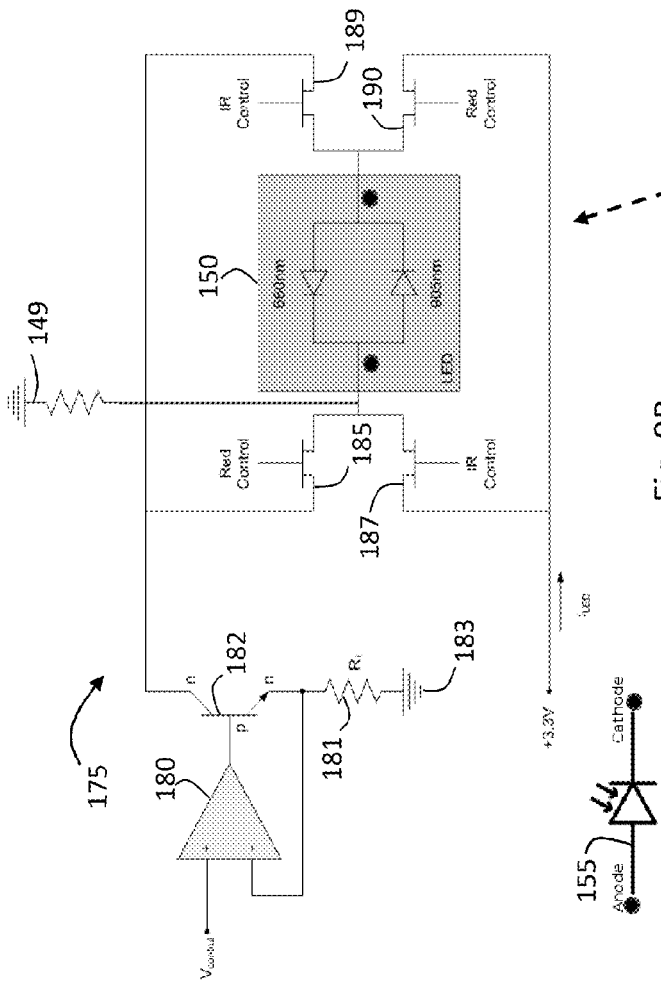
149
150
660nm
880nm
LED
IR Control
Red Control
189
190
185
187
175
180
182
181
183
+3.3V
Cathode
Anode
155

Fig. 9B

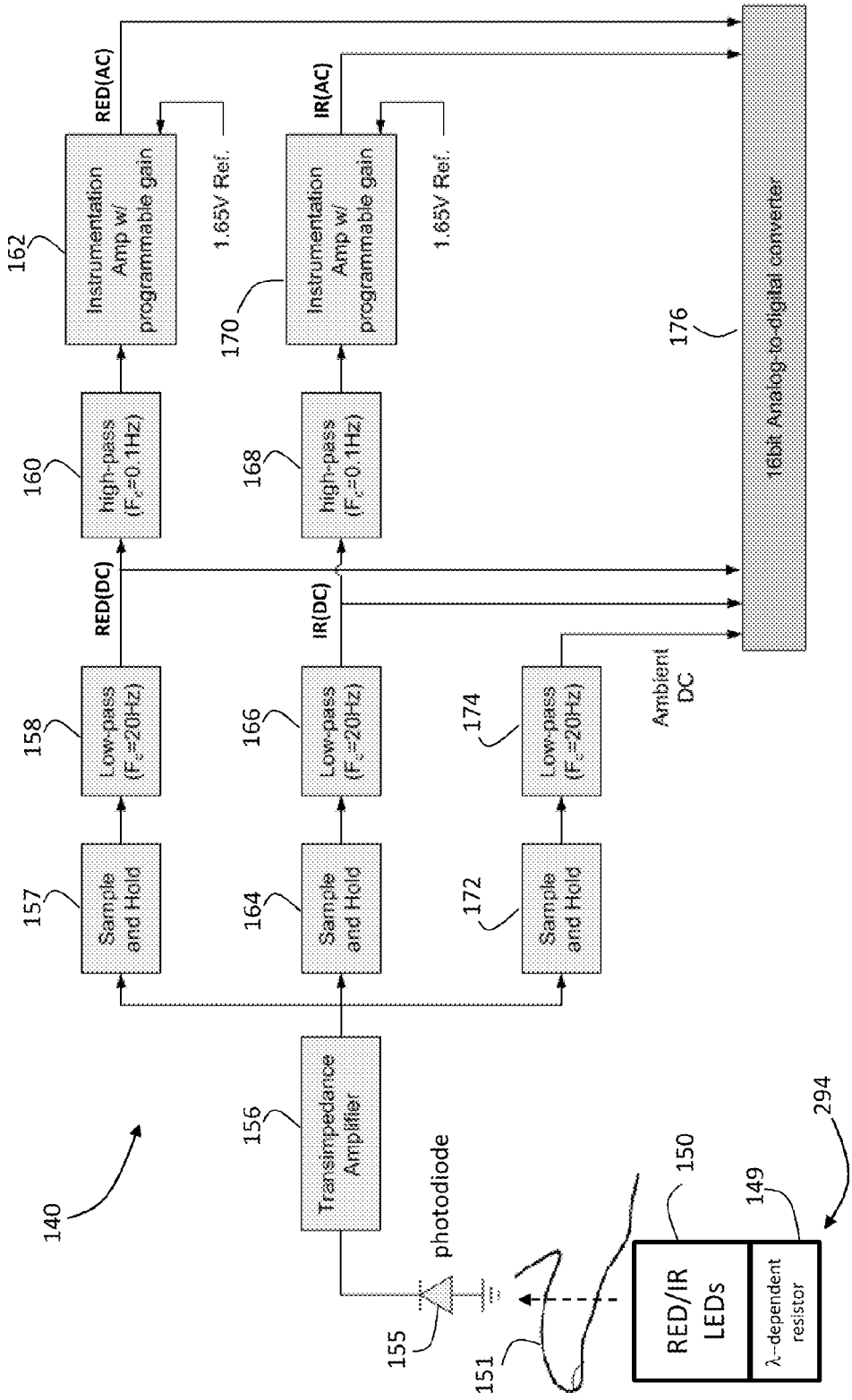
140
156
Transimpedance Amplifier
155
photodiode
151
150
RED/IR LEDs
149
λ-dependent resistor
294
157
Sample and Hold
158
Low-pass (F_c=20Hz)
RED(DC)
160
high-pass (F_c=0.1Hz)
162
Instrumentation Amp w/ programmable gain
1.65V Ref.
RED(AC)
164
Sample and Hold
166
Low-pass (F_c=20Hz)
IR(DC)
168
high-pass (F_c=0.1Hz)
170
Instrumentation Amp w/ programmable gain
1.65V Ref.
IR(AC)
172
Sample and Hold
174
Low-pass (F_c=20Hz)
Ambient DC
176
16bit Analog-to-digital converter

Fig. 10

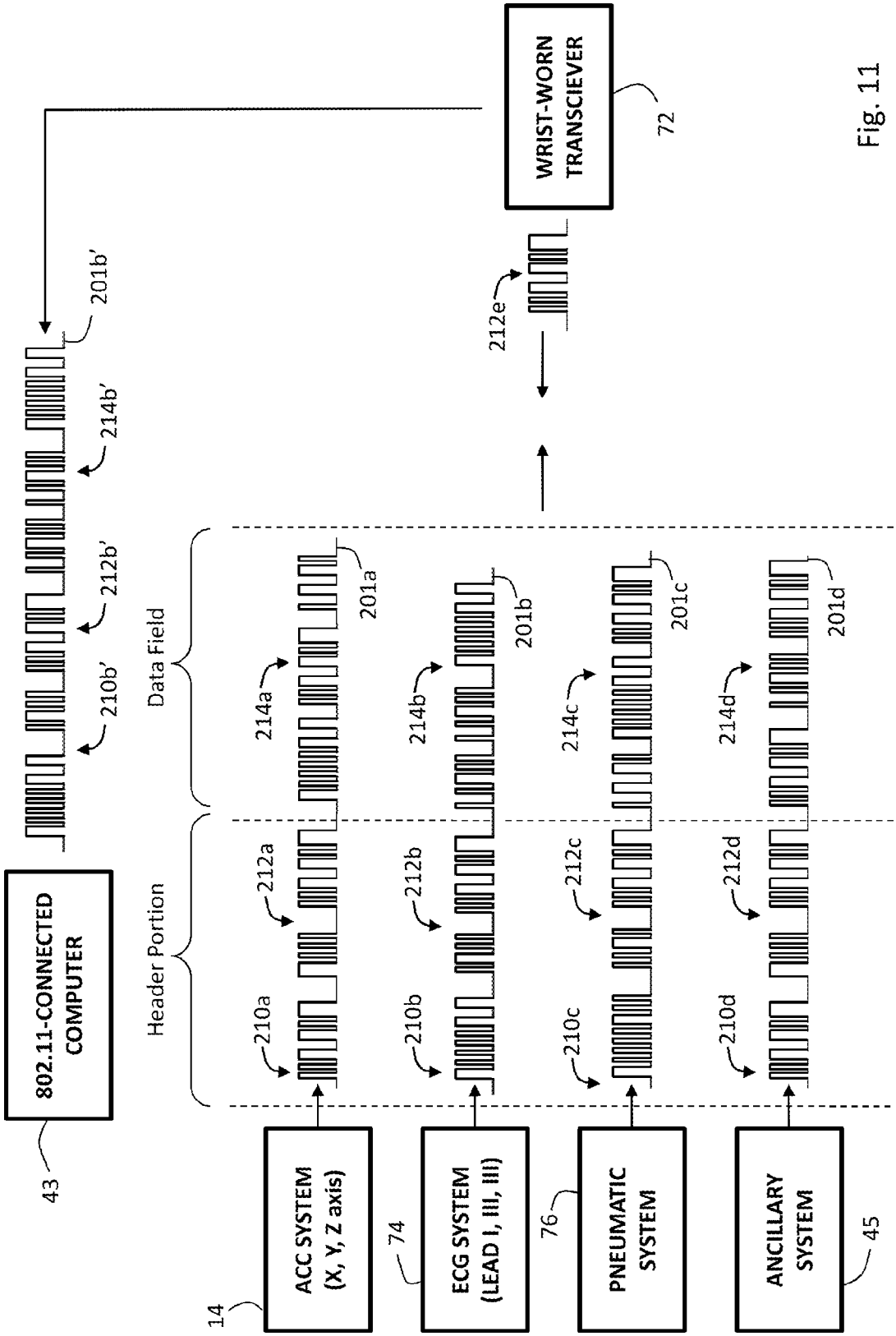
WRIST-WORN TRANSCIEVER
72
212e
201b'
214b'
212b'
210b'
802.11-CONNECTED COMPUTER
43
Header Portion
Data Field
210a
212a
214a
201a
210b
212b
214b
201b
210c
212c
214c
201c
210d
212d
214d
201d
ACC SYSTEM (X, Y, Z axis)
14
ECG SYSTEM (LEAD I, III, III)
74
PNEUMATIC SYSTEM
76
ANCILLARY SYSTEM
45

Fig. 11

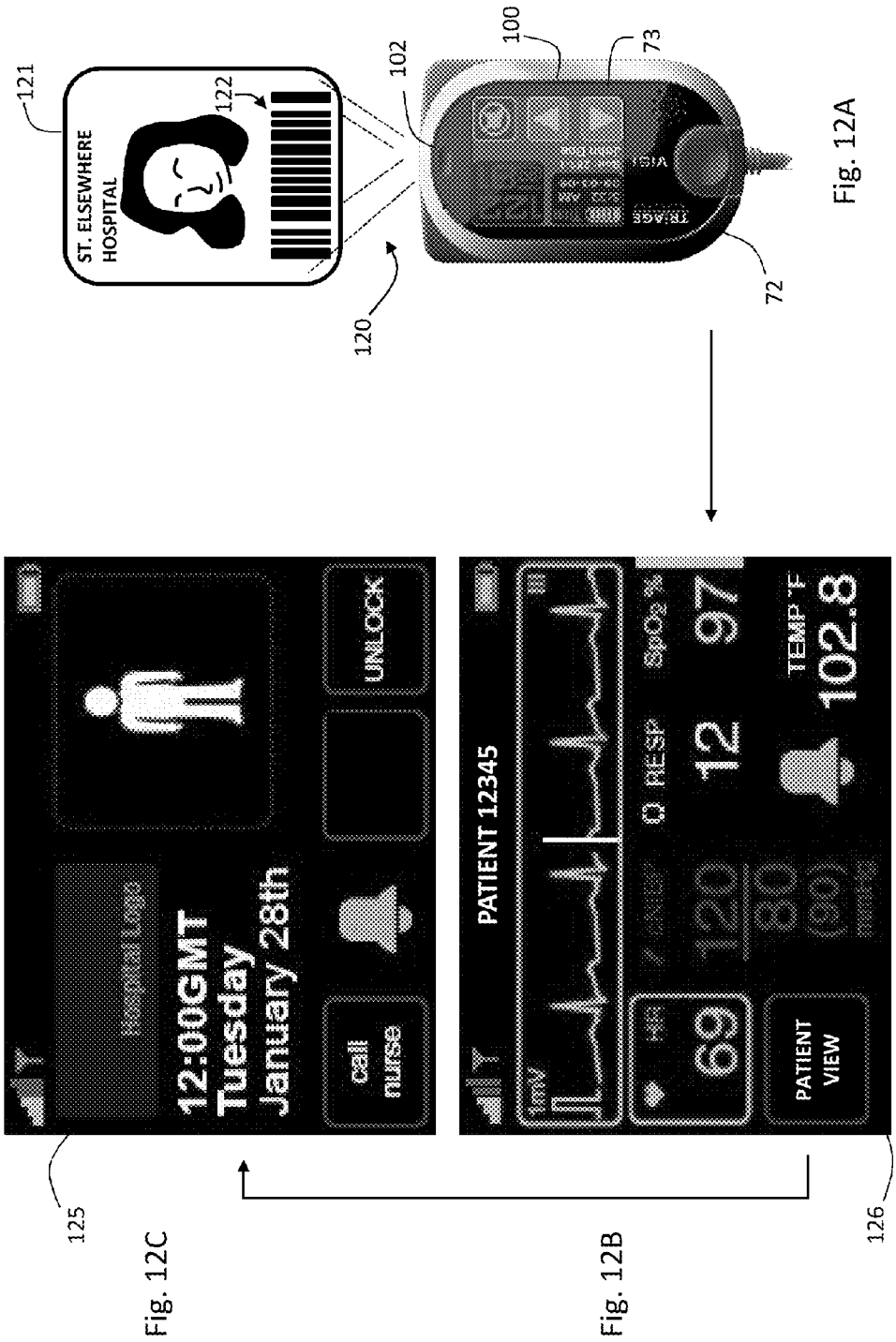

Fig. 12A

Fig. 12C

Fig. 12B

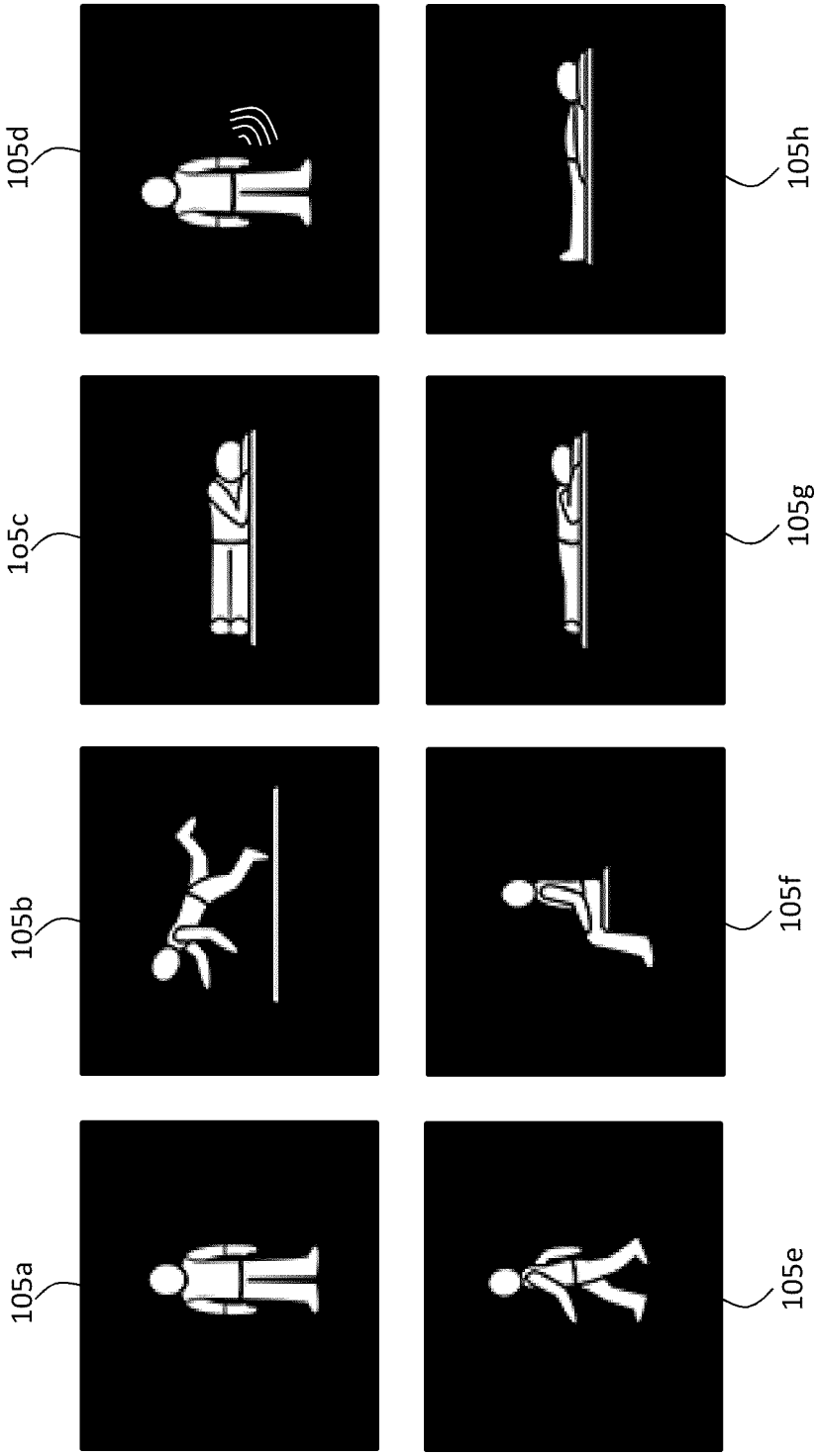

Fig. 13

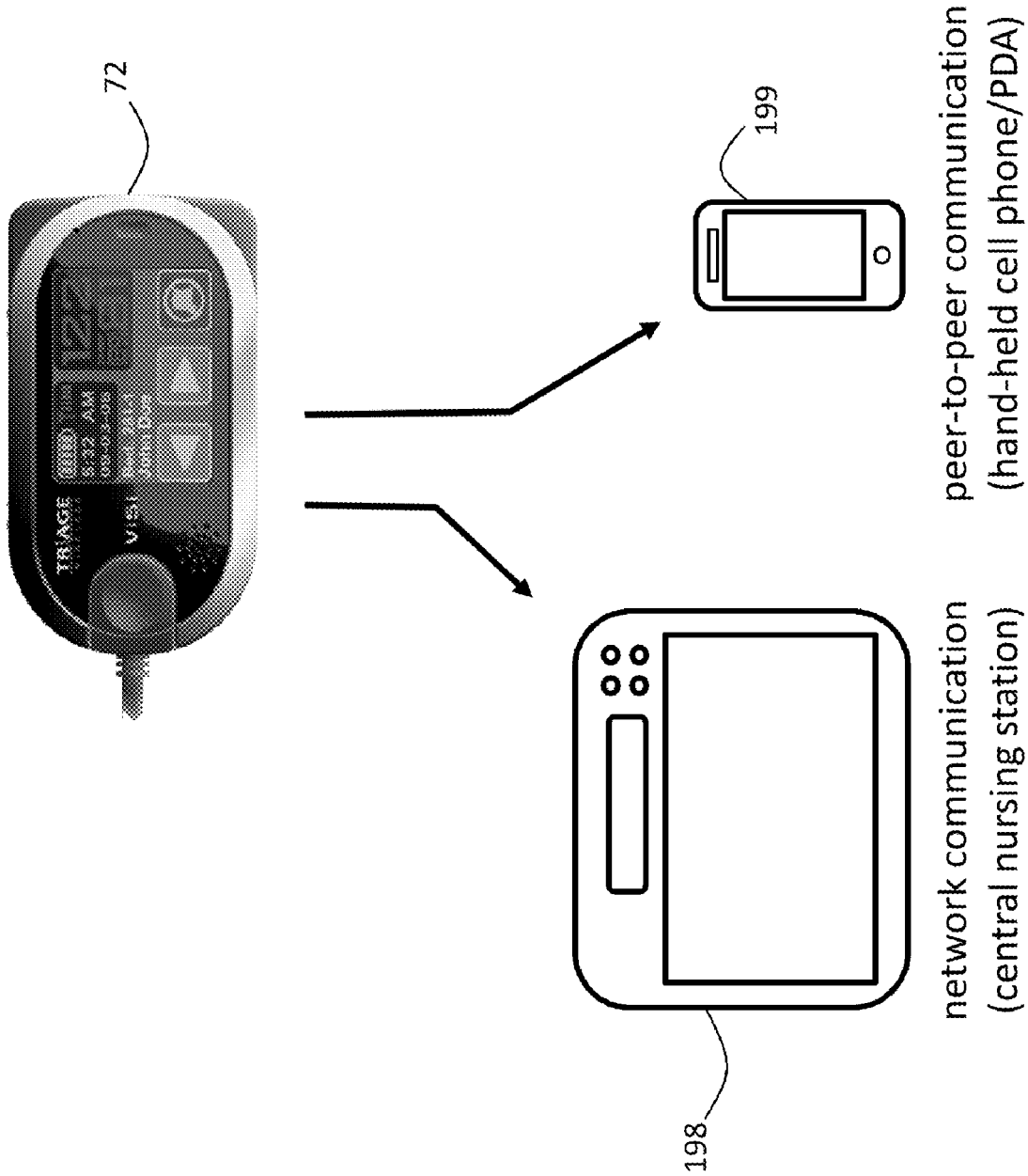
72
TRIAGE
VISA
199
peer-to-peer communication
(hand-held cell phone/PDA)
198
network communication
(central nursing station)

Fig. 14

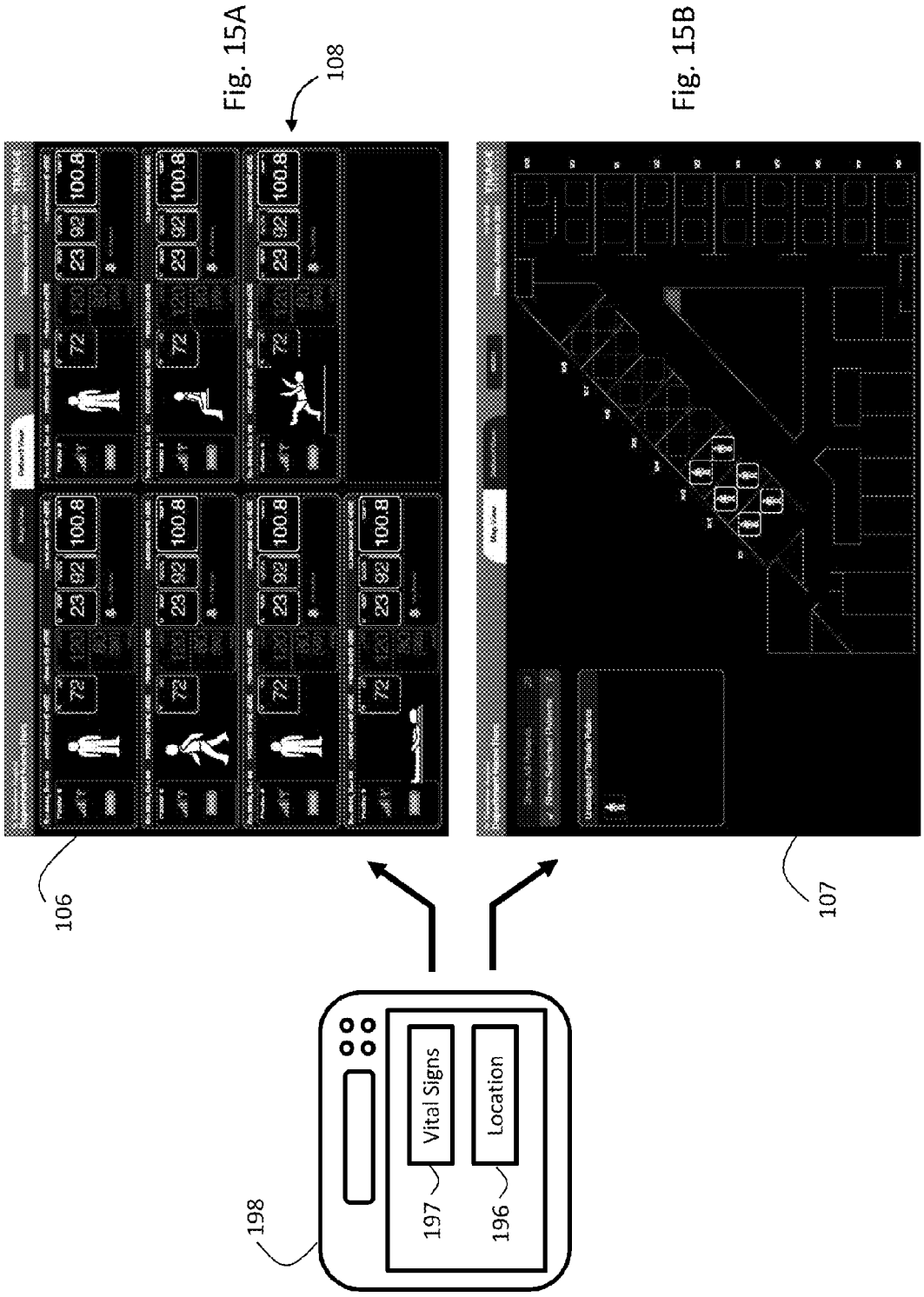
Fig. 15A
108
Fig. 15B
106
107
198
Vital Signs
Location
197
196

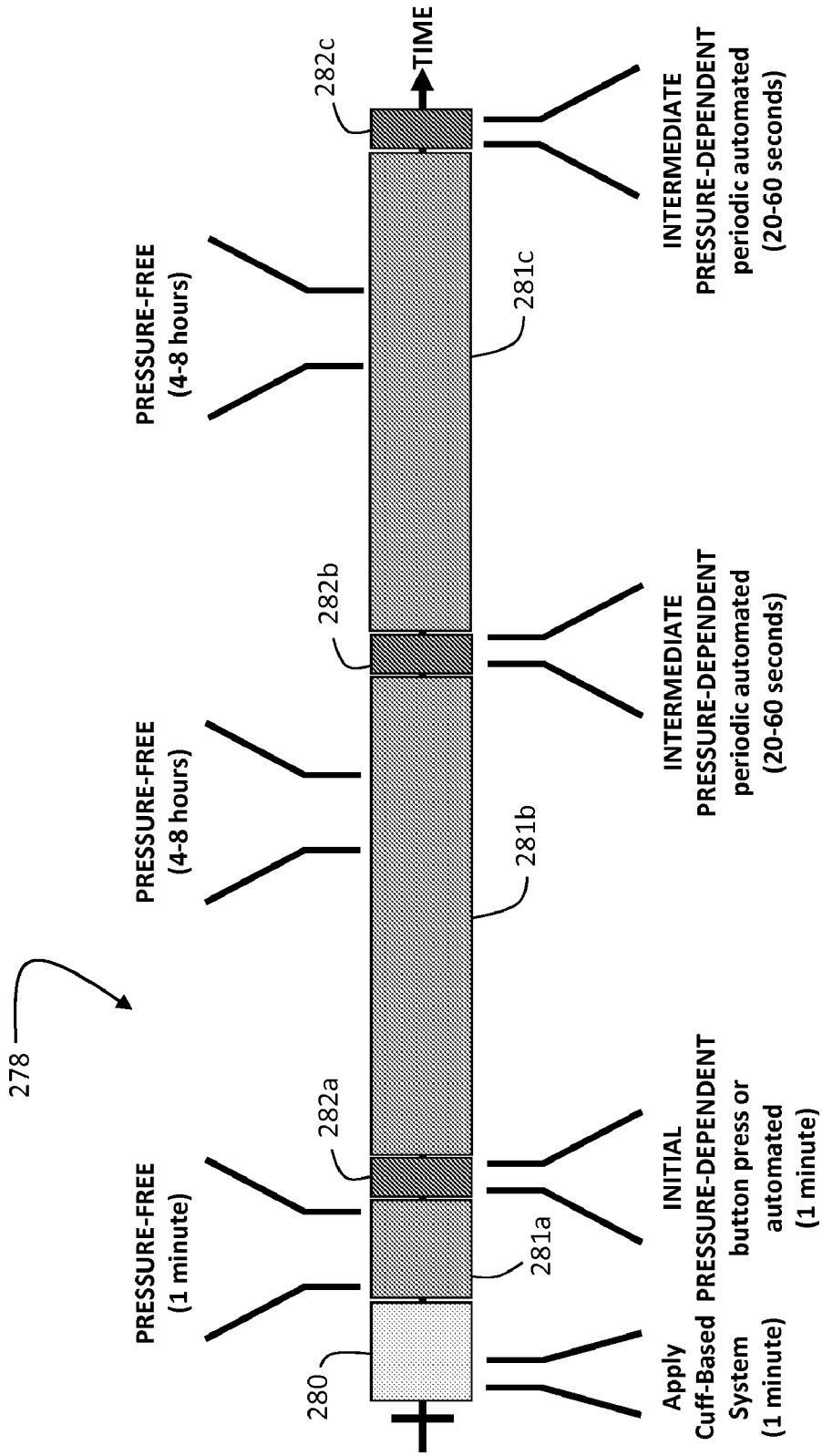
278
280
281a
281b
281c
282a
282b
282c
TIME
PRESSURE-FREE
(1 minute)
PRESSURE-FREE
(4-8 hours)
PRESSURE-FREE
(4-8 hours)
Apply
Cuff-Based
System
(1 minute)
INITIAL
PRESSURE-DEPENDENT
button press or
automated
(1 minute)
INTERMEDIATE
PRESSURE-DEPENDENT
periodic automated
(20-60 seconds)
INTERMEDIATE
PRESSURE-DEPENDENT
periodic automated
(20-60 seconds)

Fig. 16

BODY-WORN VITAL SIGN MONITOR

CROSS REFERENCES TO RELATED APPLICATIONS

[0001] Not Applicable

STATEMENT REGARDING FEDERALLY SPONSORED RESEARCH OR DEVELOPMENT

[0002] Not Applicable

BACKGROUND OF THE INVENTION

[0003] 1. Field of the Invention

[0004] The present invention relates to medical devices for monitoring vital signs, e.g., arterial blood pressure.

[0005] 2. Description of the Related Art

[0006] Conventional vital sign monitors are used throughout the hospital, and are particularly commonplace in high-acuity areas such as the intensive care unit (ICU), emergency department (ED), or operating room (OR). Patients in these areas are generally sick and require a relatively high degree of medical attention. The ratio between medical professionals and patient in these areas is typically high compared to lower-acuity areas of the hospital. Even in such areas, however, it is still common practice for medical professionals to measure vital signs such as blood pressure, respiratory rate, oxygen saturation (SpO2), heart rate, and temperature. Monitoring of these parameters is typically done with portable or wall-mounted vital sign monitors. It can be difficult to effectively monitor patients in this way, however, because they are often ambulatory and not constrained to a single hospital room. This poses a problem for conventional vital sign monitors, which are typically heavy and unwieldy, as they are not intended for the ambulatory population. Some companies have developed ambulatory vital sign monitors with limited capabilities (e.g. cuff-based blood pressure using oscillometry and SpO2 monitoring), but typically these devices only make intermittent, rather than continuous, measurements. And even these measurements tend to work best on stationary patients, as they are easily corrupted by motion-related artifacts.

[0007] Blood pressure is a vital sign often considered to be a good indicator of a patient's health. In critical care environments like the ICU and OR, blood pressure can be continuously monitored with an arterial catheter inserted in the patient's radial or femoral artery. Alternatively, blood pressure can be measured intermittently with a cuff using oscillometry, or manually by a medical professional using auscultation. Most vital sign monitors perform both the catheter and cuff-based measurements of blood pressure. Blood pressure can also be monitored continuously with a technique called pulse transit time (PTT), defined as the transit time for a pressure pulse launched by a heartbeat in a patient's arterial system. PTT has been shown in a number of studies to correlate to systolic (SYS), diastolic (DIA), and mean (MAP) blood pressures. In these studies, PTT is typically measured with a conventional vital signs monitor that includes separate modules to determine both an electrocardiogram (ECG) and SpO2. During a PTT measurement, multiple electrodes typically attach to a patient's chest to determine a time-dependent ECG component characterized by a sharp spike called the 'QRS complex'. The QRS complex indicates an initial depolarization of ventricles within the heart and, informally, marks the beginning of the heartbeat and a pressure pulse that follows.

[0008] SpO2 is typically measured with a bandage or clothespin-shaped sensor that clips to a patient's finger and includes optical systems operating in both the red and infrared spectral regions. A photodetector measures radiation emitted from the optical systems that transmits through the patient's finger. Other body sites, e.g., the ear, forehead, and nose, can also be used in place of the finger. During a measurement, a microprocessor analyses both red and infrared radiation detected by the photodetector to determine the patient's blood oxygen saturation level and a time-dependent waveform called a photoplethysmograph (PPG). Time-dependent features of the PPG indicate both pulse rate and a volumetric absorbance change in an underlying artery caused by the propagating pressure pulse.

[0009] Typical PTT measurements determine the time separating a maximum point on the QRS complex (indicating the peak of ventricular depolarization) and a foot of the PPG waveform (indicating the beginning the pressure pulse). PTT depends primarily on arterial compliance, the propagation distance of the pressure pulse (which is closely approximated by the patient's arm length), and blood pressure. To account for patient-dependent properties, such as arterial compliance, PTT-based measurements of blood pressure are typically 'calibrated' using a conventional blood pressure cuff and oscillometry. Typically during the calibration process the blood pressure cuff is applied to the patient, used to make one or more blood pressure measurements, and then left for future measurements. Going forward, the calibration measurements are used, along with a change in PTT, to continuously measure the patient's blood pressure (defined herein as 'cNIBP'). PTT typically relates inversely to blood pressure, i.e., a decrease in PTT indicates an increase in blood pressure.

[0010] A number of issued U.S. patents describe the relationship between PTT and blood pressure. For example, U.S. Pat. Nos. 5,316,008; 5,857,975; 5,865,755; and 5,649,543 each describe an apparatus that includes conventional sensors that measure an ECG and PPG, which are then processed to determine PTT. U.S. Pat. No. 5,964,701 describes a finger-ring sensor that includes an optical system for detecting a PPG, and an accelerometer for detecting motion.

SUMMARY OF THE INVENTION

[0011] To improve the safety of hospitalized patients, particularly those in lower-acuity areas, it is desirable to have a body-worn monitor that continuously measures a plurality of vital signs from a patient, and wirelessly transmits these directly to a nurse or to a central nursing station. Preferably the monitor operates algorithms featuring: 1) a low percentage of false positive alarms/alerts; and 2) a high percentage of true positive alarms/alerts. The term 'alarm/alert', as used herein, refers to an audio and/or visual alarm generated directly by a monitor worn on the patient's body, or alternatively a remote monitor (e.g., a central nursing station). To accomplish this, the invention provides a body-worn monitor that measures a patient's vital signs (e.g. blood pressure, SpO2, heart rate, respiratory rate, and temperature) while simultaneously characterizing their activity state (e.g. resting, walking, convulsing, falling) and posture (upright, supine). The body-worn monitor processes this information to minimize corruption of the vital signs and associated alarms/alerts by motion-related artifacts.

[0012] The body-worn monitor can include a software framework that generates alarms/alerts based on threshold values that are either preset or determined in real time. The framework additionally includes a series of 'heuristic' rules that take the patient's activity state and motion into account, and process the vital signs accordingly. These rules, for example, indicate that a walking patient is likely breathing and has a regular heart rate, even if their motion-corrupted vital signs suggest otherwise.

[0013] The body-worn monitor features a series of sensors that attach to the patient to measure time-dependent PPG, ECG, accelerometer-based motion (ACC), oscillometric (OSC), respiratory rate (RR), and impedance pneumography (IP) waveforms. A microprocessor (CPU) within the monitor continuously processes these waveforms to determine the patient's vital signs, degree of motion, posture and activity level. Sensors that measure these signals typically send digitized information to a wrist-worn transceiver through a serial interface, or bus, operating on a controlled area network (CAN) protocol. The CAN bus is typically used in the automotive industry, which allows different electronic systems to effectively and robustly communicate with each other with a small number of dropped packets, even in the presence of electrically noisy environments. This is particularly advantageous for ambulatory patients that may generate signals with large amounts of motion-induced noise.

[0014] Blood pressure, a vital sign that is particularly useful for characterizing a patient's condition, is typically calculated from a PTT value determined from the PPG and ECG waveforms. Once determined, blood pressure and other vital signs can be further processed, typically with a server within a hospital, to alert a medical professional if the patient begins to decompensate.

[0015] In other embodiments, PTT can be calculated from time-dependent waveforms other than the ECG and PPG, and then processed to determine blood pressure. In general, PTT can be calculated by measuring a temporal separation between features in two or more time-dependent waveforms measured from the human body. For example, PTT can be calculated from two separate PPGs measured by different optical sensors disposed on the patient's fingers, wrist, arm, chest, or virtually any other location where an optical signal can be measured using a transmission or reflection-mode optical configuration. In other embodiments, PTT can be calculated using at least one time-dependent waveform measured with an acoustic sensor, typically disposed on the patient's chest. Or it can be calculated using at least one time-dependent waveform measured using a pressure sensor, typically disposed on the patient's bicep, wrist, or finger. The pressure sensor can include, for example, a pressure transducer, piezoelectric sensor, actuator, polymer material, or inflatable cuff.

[0016] In one aspect, the invention provides a body-worn monitor featuring a processing system that receives a digital data stream from an ECG system. A cable houses the ECG system at one terminal end, and plugs into the processing system, which is typically worn on the patient's wrist like a conventional wristwatch. Specifically, the ECG system features: i) a connecting portion connected to multiple electrodes worn by the patient; ii) a differential amplifier that receives electrical signals from each electrode and process them to generate an analog ECG waveform; iii) an analog-to-digital converter that converts the analog ECG waveform into a digital ECG waveform; and iv) a transceiver that transmits a digital data stream representing the digital ECG waveform (or information calculated from the waveform) through the cable and to the processing system. Different ECG systems, preferably featuring three, five, or twelve electrodes, can be interchanged with one another.

[0017] In embodiments, the ECG system features a single-chip solution for determining ECG and IP waveforms, heart rate, respiratory rate, error codes, and diagnostic information such as ventricular tachycardia (VTAC), ventricular fibrillation (VFIB), and premature ventricular contractions (PVCs). A mechanical housing enclosing the ECG system can additionally house a motion-detecting sensor (e.g. a three-axis digital accelerometer) and a temperature sensor (e.g. a thermocouple). The cable features at least one conductor (and typically two conductors) that transmits both a first digital data stream representing the digital ECG waveform and a second digital data stream representing a digital motion waveform (e.g. an ACC waveform) generated by the accelerometer. Both digital data streams typically include a header portion indicating the source of the data stream, and a data portion that includes any relevant information. For the ECG system, such information includes an ECG waveform, heart rate, an error code, and a physiological state corresponding to the patient (e.g. VTAC, VFIB, PVCs). The data portion corresponding to the accelerometer includes information such as the ACC waveform, degree of motion, posture, and an activity level corresponding to the patient.

[0018] In another aspect, the system described above also features an oscillometry system that includes: i) a cuff, typically worn on the patient's arm to apply a pressure; ii) a pneumatic system that inflates the cuff and detects pressure therein to generate an analog oscillometric waveform; iii) an analog-to-digital converter that converts the analog oscillometric waveform into a digital oscillometric waveform; iv) a transceiver component that transmits a digital oscillometric data stream representing the digital oscillometric waveform (or values calculated therefrom) through a second serial port and to the processing system. In this case the digital oscillometry data stream features a header portion that indicates the origin of the packet, and a data portion that includes information such as a pressure waveform, blood pressure, heart rate, error codes, and a physiological state corresponding to the patient.

[0019] The system can also connect through one of its serial ports to an ancillary third system that can be, for example, a system that delivers a compound or other therapeutic intervention to the patient, or that can gather other data from the patient. Such systems include infusion pumps, insulin pumps, hemodialysis machines, glucometers, and systems for delivering oxygen, such as a mechanical ventilator. This list is not meant to be limiting. In the case of a therapeutic compound, the data portion of the packet can indicate the type of compound delivered to the patient, a dosage of the compound, and a rate of delivery of the compound. The third system can also be a sensor configured to measure a signal from the patient. Such sensors include, for example, a pulse oximeter, EEG monitor, temperature sensor, respiratory rate sensor, motion sensor, camera, impedance plethysmography sensor, optical spectrometer, and skin-conductance sensor. Again, this list is not meant to be limiting. Here, the data portion of the packet can include waveform information, heart rate, pulse rate, SpO2 value, EEG waveform, temperature, respiratory rate, degree of motion, posture, activity level, arm height, an

image, a property of the patient measurable optically, and a property of the patient measurable electrically.

[0020] In embodiments, both the ECG and oscillometry systems include separate microprocessors, both of which are in communication with the processing system within the wrist-worn transceiver. For example, the processing system can send a packet (containing, e.g., a timing parameter) to the microprocessor within the ECG and oscillometry systems to synchronize them with the processing system worn on the wrist.

[0021] Preferably the transceiver component used in each of the above-described systems is a serial transceiver operating the Controller Area Network ("CAN") protocol. CAN is a multi-master broadcast serial bus standard for connecting electronic control units (ECUs). Each node is able to send and receive messages, but not simultaneously; a message, consisting primarily of an ID (usually chosen to identify the message-type/sender) and (up to eight) message bytes, is transmitted onto the bus and is sensed by all nodes. CAN transceivers associated with the ECG and pneumatic systems need to be synchronized to prevent any significant drift that may occur between the different time-domain waveforms they generate. This is typically done using a series of timing packets, described in detail below, that are sent between the wrist-worn transceiver and these remote systems.

[0022] In another aspect, the system provides a method for calculating blood pressure from a patient that features the following steps: (a) generating a first digital waveform indicating an ECG signal with a first remote sensor; (b) generating a second digital waveform indicating a pressure signal with a second remote sensor; (c) generating an analog waveform indicating an optical signal with a third remote sensor; (d) synchronizing the first digital waveform, the second digital waveform, and a digitized version of the analog waveform; (e) determining a pulse transit time from the first digital waveform and a digitized version of the analog waveform; (f) determining a calibration from the first digital waveform, the second digital waveform, and a digitized version of the analog waveform; and (g) determining a blood pressure value from the calibration and a pulse transit time.

[0023] Typically the optical signal is generated with an optical sensor configured to be worn around the patient's thumb. PTT is typically calculated from a time difference separating a QRS complex in the ECG waveform and a foot of a PPG waveform. In other embodiments the same optical sensor used to measure the optical waveform features a first LED operating in the red spectral range, and a second LED operating in the infrared spectral range. Optical waveforms measured with these LEDs can additionally be processed to determine SpO2, as is described in detail below.

[0024] The pressure signal is typically generated with a cuff-based pneumatic system wrapped around the patient's arm, and is typically measured during an inflation-based oscillometry measurement. Here, the processing component in the wrist-worn transceiver is further configured to calculate a calibration from a group of pulse transit times, wherein each pulse transit time in the group is measured when a different pressure is applied to the patient's arm. These data are then processed with a model that estimates an 'effective' blood pressure in the patient's arm during the inflation-based measurement, and uses this to estimate a relationship between PTT and blood pressure for the patient. This relationship represents a calibration that is then used with follow-on PTT measurements to measure the patient's cNIBP.

[0025] In another aspect, the invention provides a body-worn vital sign monitor featuring a processing component that includes a system for detecting an identifying code from a medical professional, and in response rendering a specific graphical user interface (GUI) on the wrist-worn transceiver. Preferably the system for detecting an identifying code is a barcode scanner, and the identifying code is a barcode printed on, e.g., the badge of the medical professional. Alternatively, a system based on radio-frequency identifying codes (RFID) is used in place of the barcode scanner. In still other embodiments the identifying code is simply an alphanumeric password entered into a GUI on the transceiver by the medical professional. In all cases, the identifying code prompts the transceiver to render a GUI that is appropriate for the medical professional, but not necessarily for the patient. Such a GUI may include, for example, time-domain waveforms, vital sign information, and parameters relating to alarms/alerts. The GUI for the patient is typically much simpler, and includes information such as the time of day and a 'nurse call' button. To support this feature, the wrist-worn transceiver typically includes a speaker and system for communicating over the hospital's wireless network using standard voice over IP (VOIP) protocols. The speaker can also play pre-recorded messages that may be germane to the patient.

[0026] The GUI displayed by the wrist-worn transceiver may depend on the orientation of the transceiver. This can be determined, for example, by signals generated by an internal accelerometer. For example, when the transceiver is oriented to face a medical professional, the accelerometer can generate representative signals that can be processed by an internal CPU, which in response will render a GUI suitable for the medical professional. Alternatively, the CPU will render a GUI suitable for the patient when signals from the accelerometer indicate that the transceiver is oriented towards the patient.

[0027] The wrist-worn transceiver can communicate with a remote device through a wireless connection that operates on the hospital's wireless network, or alternatively through a peer-to-peer connection. In another aspect of the invention, for example, the remote device is configured to simultaneously display vital signs for each patient in a group when a signal strength corresponding to each wrist-worn transceiver in the group is below a pre-determined threshold value. When the signal strength from the wireless system worn by a patient exceeds the pre-determine threshold, the remote monitor displays information for that particular patient. Such a situation would occur, for example, if a tablet computer normally disposed at a central nursing station was brought into the patient's room. Typically the pre-determined threshold value is between about −100 and −80 dB, and the wireless system used by each wrist-worn transceiver operates on an industry-standard communications protocol, preferably selected from 802.11, 802.15.4, and cellular wireless protocols. In embodiments, the remote device is a device comprising a microprocessor, a display, and a compatible communications transceiver. Examples include a computing device selected from the group consisting of a desktop computer, a portable computer, a tablet computer, a cellular telephone, and a personal digital assistant. This list is not meant to be limiting.

[0028] In yet another aspect, the invention provides a body-worn monitor featuring a 'hot swappable' battery. Here, the transceiver operates an algorithm that performs the following steps: (b) display on a GUI that the battery needs to be replaced; (c) detect when a secondary device is plugged into

one of the serial ports, the secondary device indicating that the battery is about to be replaced; (d) store settings corresponding to the wireless system (e.g. IP and/or MAC addresses, passwords, encryption keys) and the patient's vital signs in the non-volatile memory; and (e) indicate on the GUI that the battery can be replaced. Once this is done, the depleted battery is replaced with a new one, and a button on the GUI is pressed to resume a wireless connection to the hospital's network. Continuous monitoring of the patient resumes once this is complete. Typically the secondary device plugs into a serial port on the transceiver, and sends a serial packet over the CAN bus indicating the battery is ready to be swapped.

[0029] The body-worn monitor can determine a patient's location in addition to their vital signs and motion-related properties. Typically, the location-determining sensor and the wireless transceiver operate on an industry-standard communications system, e.g. a wireless system based on 802.11, 802.15.4, or cellular protocols. In this case a location is determined by processing the wireless signal with one or more algorithms known in the art. These include, for example, triangulating signals received from at least three different wireless base stations, or simply estimating a location based on signal strength and proximity to a particular base station. In still other embodiments the location sensor includes a conventional global positioning system (GPS).

[0030] The body-worn monitor can include a first voice interface, and the remote computer can include a second voice interface that integrates with the first voice interface. The location sensor, wireless transceiver, and first and second voice interfaces can all operate on a common wireless system, such as one of the above-described systems based on 802.11 or cellular protocols. The remote computer, for example, can be a monitor that is essentially identical to the monitor worn by the patient, and can be carried or worn by a medical professional. In this case the monitor associated with the medical professional features a display wherein the user can select to display information (e.g. vital signs, location, and alarms) corresponding to a particular patient. This monitor can also include a voice interface so the medical professional can communicate with the patient.

[0031] Blood pressure is determined continuously and non-invasively using a technique, based on PTT, which does not require any source for external calibration. This technique, referred to herein as the 'Composite Technique', determines blood pressure using PPG, ECG, and OSC waveforms. The Composite Technique is described in detail in the co-pending patent application, the contents of which are fully incorporated herein by reference: VITAL SIGN M FOR MEASURING BLOOD PRESSURE USING OPTICAL, ELECTRICAL, AND PRESSURE WAVEFORMS (U.S.S.N 12/1q38, 194; filed Jun. 12, 2008).

[0032] Still other embodiments are found in the following detailed description of the invention, and in the claims.

BRIEF DESCRIPTION OF THE DRAWINGS

[0033] FIG. **1** shows a schematic drawing of a body-worn monitor featuring sensors for measuring ECG, PPG, ACC, OSC, and RR waveforms, and systems for processing these to determine a patient's vital signs;

[0034] FIG. **2** shows a schematic drawing of a patient wearing the body-worn monitor of FIG. **1** and its associated sensors;

[0035] FIG. **3** is a graph of time-dependent ECG, PPG, OSC, ACC, and RR waveforms generated with the body-worn monitor and sensors of FIG. **2**;

[0036] FIGS. **4**A and **4**B show three-dimensional images of the body-worn monitor of FIG. **1** attached to a patient with and without, respectively, a cuff-based pneumatic system used for a calibrating indexing measurement;

[0037] FIGS. **5**A and **5**B show, respectively, three-dimensional images of the wrist-worn transceiver before and after receiving cables from other sensors within the body-worn monitor;

[0038] FIG. **5**C shows a top view of the wrist-worn transceiver of FIGS. **5**A and **5**B rendering a GUI;

[0039] FIGS. **6**A, **6**B, **6**C and **6**D show, respectfully, side (**6**A, C) and top (**6**B, D) views of the wrist-worn transceiver of FIGS. **5**A-C before, during, and after a battery hot swap;

[0040] FIG. **7**A shows a three-dimensional image of the body-worn monitor of FIG. **4**B attached to a patient along with the ECG system;

[0041] FIG. **7**B shows a schematic drawing of the ECG system within the body-worn monitoring of FIG. **7**A;

[0042] FIG. **8**A shows a three-dimensional image of the body-worn monitor of FIG. **4**B attached to a patient along with the cuff-based pneumatic system;

[0043] FIGS. **8**B and **8**C show, respectively, side and three-dimensional views of the pneumatic components with the cuff-based pneumatic system of FIG. **8**A;

[0044] FIG. **9**A shows a three-dimensional image of the body-worn monitor of FIG. **4**B attached to a patient along with the thumb-worn optical sensor;

[0045] FIG. **9**B is a schematic circuit diagram of the thumb-worn optical sensor of FIG. **9**A and the switching components used to control its light-emitting diodes (LEDs);

[0046] FIG. **10** is a schematic circuit diagram of the amplifier/filter circuit used to process signals from the thumb-worn optical sensor shown in FIG. **9**B;

[0047] FIG. **11** shows a schematic drawing of the ACC, ECG, pneumatic, and auxiliary systems of the body-worn monitor communicating over the CAN protocol with the wrist-worn transceiver;

[0048] FIG. **12**A shows a three-dimensional view of the wrist-worn transceiver of FIG. **5**C scanning a barcode printed on a badge of a medical professional;

[0049] FIGS. **12**B and **12**C show, respectively, patient and medical professional views used in the GUI rendered on the wrist-worn transceiver of FIG. **12**A;

[0050] FIG. **13** shows a series of icons used to indicate the patient's posture and activity level in the GUI shown in FIGS. **12**C, **15**A, and **15**B;

[0051] FIG. **14** shows a three-dimensional view of the wrist-worn transceiver of FIG. **5**C interfacing with a tablet computer and personal digital assistant (PDA) through, respectively, network and peer-to-peer wireless communication protocols;

[0052] FIGS. **15**A and **15**B show, respectively, patient and map views used in the GUI rendered on the remote tablet computer of FIG. **14**; and

[0053] FIG. **16** is a schematic drawing showing a sequence of pressure-dependent and pressure-free measurements made according to the Composite Technique using the body-worn monitor of FIGS. **4**A and **4**B.

DETAILED DESCRIPTION OF THE INVENTION

System Overview

[0054] FIG. **1** shows a schematic drawing of a body-worn monitor **10** according to the invention featuring a wrist-worn

transceiver **72** that continuously determines vital signs (e.g. blood pressure, SpO2, heart rate, respiratory rate, and temperature) and motion-related properties (e.g. posture, arm height, activity level, and degree of motion) for an ambulatory patient in a hospital. The monitor **10** is small, lightweight, and comfortably worn on the patient's body during their stay in the hospital; its form factor is described in detail below. A medical professional can apply the monitor, for example, to a recently admitted patient waiting in the ED, and the same monitor can provide continuous monitoring during their stay in the hospital. For example, the patient can wear the monitor in their hospital room, as they receive specific procedures or tests, during transport to other rooms, and even during surgery. The monitor **10** provides continuous monitoring, and features a software framework that determines alarms/alerts if the patient begins to decompensate. The framework processes both the patient's motion and their vital sign information with algorithms that reduce the occurrence of false alarms.

[0055] A combination of features makes the body-worn monitor **10** ideal for ambulatory patients within the hospital. For example, its wrist-worn transceiver **72** features a wireless transmitter **24** that communicates through a hospital network to a computer (e.g. a portable tablet computer) at a central nursing station **43**, and to a local computer **44** (e.g. a handheld PDA) through a peer-to-peer connection. The specific mode of communication can be determined automatically (using, e.g., a signal strength associated with the wireless connection), or manually through an icon on the GUI.

[0056] The transceiver **72** features a CPU **22** that communicates through a digital CAN interface, or bus, to external systems featuring ECG **16**, external accelerometers **14***b-c*, pneumatic **20**, and auxiliary **45** sensors. Each sensor **16**, **14***b-c*, **20**, **45** is 'distributed' on the patient to minimize the bulk and weight normally associated with conventional vital sign monitors, which typically incorporate all electronics associated with measuring vital signs in a single plastic box. Moreover, each of these sensors **16**, **14***b-c*, **20**, **45** generate digital signals close to where they actually attach to the patient, as opposed to generating an analog signal and sending it through a relatively long cable to a central unit for processing. This can reduce noise due to cable motion which is often mapped onto analog signals. Cables **40**, **38**, **46** used in the body-worn monitor **10** to transmit packets over the CAN bus typically include 5 separate wires bundled together with a single protective cladding: the wires supply power and ground to the remote ECG system **16**, accelerometers **14***b-c*, pneumatic **20**, and auxiliary systems **45**; provide high/low signal transmission lines for data transmitted over the CAN protocol; and provide a grounded electrical shield for each of these four wires. There are several advantages to this approach. First, a single pair of transmission lines in the cable (i.e. the high/low signal transmission lines) can transmit multiple digital waveforms generated by completely different sensors. This includes multiple ECG waveforms (corresponding, e.g., to vectors associated with three, five, and twelve-lead ECG systems) from the ECG circuit, along with ACC waveforms associated with the x, y, and z axes of accelerometers within the body-worn monitor **10**. The same two wires, for example, can transmit up to twelve ECG waveforms (measured by a 12-lead ECG system), and six ACC waveforms (measured by the accelerometers **14***b-c*). Limiting the transmission line to a pair of conductors reduces the number of wires attached to the patient, thereby decreasing the weight and any cable-related clutter. Second, cable motion induced by an ambulatory patient can change the electrical properties (e.g. electrical impendence) of its internal wires. This, in turn, can add noise to an analog signal and ultimately the vital sign calculated from it. A digital signal, in contrast, is relatively immune to such motion-induced artifacts.

[0057] The ECG **16**, pneumatic **20**, and auxiliary **45** systems are stand-alone systems that include a separate CPU, analog-to-digital converter, and CAN transceiver. During a measurement, they connect to the transceiver **72** through cables **40**, **38**, **46** and connectors **30**, **28**, **32** to supply digital inputs over the CAN bus. The ECG system **16**, for example, is completely embedded in a terminal portion of its associated cable. Systems for three, five, and twelve-lead ECG monitoring can be swapped in an out simply by plugging the appropriate cable (which includes the ECG system **16**) into a CAN connector **30** on the wrist-worn transceiver **72**, and the attaching associated electrodes to the patient's body.

[0058] The wrist-worn transceiver **72** renders separate GUIs that can be selected for a particular viewer, e.g., different displays directed to the patient as compared to a medical professional. To do this, the transceiver **72** includes a barcode scanner **42** that can scan an identifying barcode printed, e.g., on the medical professional's badge, which indicates the viewer's identity or type to the system. In response, the system renders a GUI featuring information (e.g. vital signs, waveforms) tailored for the indicated viewer; that is, a medical professional can receive information on the GUI that may not be suitable for viewing by the patient. So that the patient can communicate with the medical professional, the transceiver **72** includes a speaker **41** interfaced to the CPU **22** and wireless system **24** that allows the patient to communicate with a remote medical professional using a standard VOIP protocol. A Li:ion battery **39** powers the transceiver **72** for about four days on a single charge, and can be removed in a 'hot swap' manner so that after the battery change the transceiver remains wirelessly connected to the hospital's network and no information is lost. This is done simply by plugging a specialized 'dongle' into the CAN connector **32** for the auxiliary system **45**, replacing the battery **39**, and then removing the dongle.

[0059] Three separate digital accelerometers **14***a-c* are non-obtrusively integrated into the monitor's form factor; two of them **14***b-c* are located on the patient's body, separate from the wrist-worn transceiver **72**, and send digitized, motion-related information through the CAN bus to the CPU **22**. The first accelerometer **14***a* is mounted on a circuit board within the transceiver **72**, and monitors motion of the patient's wrist. The second accelerometer **14***b* is incorporated directly into the cable **40** connecting the ECG system **16** to the transceiver **72** so that it can easily attach to the patient's bicep and measure motion and position of the patient's upper arm. As described below, this can be used to compensate for hydrostatic forces associated with changes in the patient's arm height that affect the monitor's blood pressure measurement, and can be additionally used to calibrate the monitor's blood pressure measurement through the patient's 'natural' motion. The third accelerometer **14***c* is typically mounted to a circuit board that supports the ECG system **16** on the terminal end of the cable, and typically attaches to the patient's chest. Motion and position of the patient's chest can be used to determine their posture and activity states, which as described below can be used with vital signs for generating alarm/alerts. Each

accelerometer **14***a-c* measures three unique ACC waveforms, each corresponding to a separate axis (x, y, or z) representing a different component of the patient's motion. To determine posture, arm height, activity level, and degree of motion, the transceiver's CPU **22** processes signals from each accelerometer **14***a-c* with a series of algorithms, described in the following pending patent applications, the contents of which are incorporated herein by reference: BODY-WORN MONITOR FEATURING ALARM SYSTEM THAT PROCESSES A PATIENT'S MOTION AND VITAL SIGNS (U.S. Ser. No. 12/469,182; filed May 20, 2009) and BODY-WORN VITAL SIGN MONITOR WITH SYSTEM FOR DETECTING AND ANALYZING MOTION (U.S. Ser. No. 12/469,094; filed May 20, 2009). In total, the CPU **22** can process nine unique, time-dependent signals (ACC_{1-9}) corresponding to the three axes measured by the three separate accelerometers. Algorithms determine parameters such as the patient's posture (e.g., sitting, standing, walking, resting, convulsing, falling), the degree of motion, the specific orientation of the patient's arm and how this affects vital signs (particularly blood pressure), and whether or not time-dependent signals measured by the ECG **16**, optical **18**, or pneumatic **20** systems are corrupted by motion.

[0060] To determine blood pressure, the transceiver **72** processes ECG and PPG waveforms measured, respectively, by the ECG **16** and optical **18** systems. The optical system **18** features a thumb-worn sensor that includes LEDs operating in the red (λ~660 nm) and infrared (λ~900 nm) spectral regions, and a photodetector that detects their radiation after it passes through arteries within the patient's thumb. The ECG waveform, as described above, is digitized and sent over the CAN interface to the wrist-worn transceiver **72**, while the PPG waveform is transmitted in an analog form and digitized by an analog-to-digital converter within the transceiver's circuit board. The pneumatic system **20** provides a digitized pressure waveform and oscillometric blood pressure measurements (SYS, DIA, and MAP) through the CAN interface; these are processed by the CPU **22** to make cuff-based 'indexing' blood pressure measurements according to the Composite Technique. The indexing measurement typically only takes about 40-60 seconds, after which the pneumatic system **20** is unplugged from its connector **28** so that the patient can move within the hospital without wearing an uncomfortable cuff-based system.

[0061] Collectively, these systems **14***a-c*, **16**, **18**, and **20** continuously measure the patient's vital signs and motion, and supply information to the software framework that calculates alarms/alerts. A third connector **32** also supports the CAN bus and is used for auxiliary medical devices (e.g. a glucometer, infusion pump, system for end-tidal CO2) that is either worn by the patient or present in their hospital room.

[0062] Once a measurement is complete, the transceiver **72** uses an internal wireless transmitter **24** to send information in a series of packets to a remote monitor **43**, **44** within the hospital. The wireless transmitter **24** typically operates on a protocol based on 802.11, and can communicate with a computer located at a central nursing station **43** through an existing network within the hospital, or through a peer-to-peer connection to a local computer or display **44** (e.g. a PDA worn by a medical professional). Information transmitted by the transceiver alerts the medical professional if the patient begins to decompensate. A server connected to the hospital network typically generates this alarm/alert once it receives the patient's vital signs, motion parameters, ECG, PPG, and ACC waveforms, and information describing their posture, and compares these parameters to preprogrammed threshold values. As described in detail below, this information, particularly vital signs and motion parameters, is closely coupled together. Alarm conditions corresponding to mobile and stationary patients are typically different, as motion can corrupt the accuracy of vital signs (e.g., by adding noise), and induce artificial changes in them (e.g., through acceleration of the patient's heart and respiratory rates) that may not be representative of the patient's actual physiology.

Measuring Time-Dependent Physiological Signals with the Body-Worn Monitor

[0063] FIGS. **2** and **3** show how a network of sensors **78***a-c*, **83**, **84**, **87**, **94** within the body-worn monitor **10** connect to a patient **70** to characterize them within a hospital. During a measurement, the sensors **78***a-c*, **83**, **84**, **87**, **94** measure signals that are processed by the monitor **10** to generate time-dependent ECG **61**, PPG **62**, OSC **63**, ACC **64**, and RR **65** waveforms. These, in turn, yield the patient's vital signs and motion parameters. Each waveform **61-65** relates to a unique physiological characteristic of the patient **70**. For example, each of the patient's heartbeats generates electrical impulses that pass through the body near the speed of light, along with a pressure wave that propagates through the patient's vasculature at a significantly slower speed. Immediately after the heartbeat, the pressure wave leaves the heart **148** and aorta **149**, passes through the subclavian artery **150** to the brachial artery **144**, and from there through the radial and ulnar arteries **145** to smaller arteries in the patient's fingers. Three disposable electrodes **78***a-c* attached to the patient's chest measure unique electrical signals which pass to a single-chip ECG circuit **83** that terminates a distal end of the ECG cable. Typically, these electrodes attach to the patient's chest in a conventional 'Einthoven's triangle' configuration featuring three unique 'vectors', each corresponding to a different lead (e.g. LEAD **1**, II, II). Related configurations can also be used when five and twelve-lead ECG systems are used in place of the three-lead system, as described below with reference to FIG. **7**A,B. Within the ECG circuit **83** signals are processed using an amplifier/filter circuit and analog-to-digital converter to generate a digital ECG waveform **61** corresponding to each lead. The ECG waveform **61** features a sharp, well-defined QRS complex corresponding to each heartbeat; this marks the initiation of the patient's cardiac cycle. Heart rate is determined directly from the ECG waveform **61** using known algorithms, such as those described in the following reference, the contents of which are incorporated herein by reference: 'ECG Beat Detection Using Filter Banks', Afonso et al., *IEEE Trans. Biomed Eng.*, 46:192-202 (1999).

[0064] To generate an IP waveform, one of the ECG electrodes in the circuit **78***a* is a 'driven lead' that injects a small amount of modulated current into the patient. A second, non-driven electrode **78***c*, typically located on the opposite side of the torso, detects the current, which is further modulated by capacitance changes in the patient's chest cavity resulting from breathing. Further processing and filtering of the IP waveforms yields an oscillating RR waveform **65** which can be further processed to calculate respiratory rate.

[0065] The optical sensor **94**, described in detail with reference to FIG. **9**A,B, features two LEDs and a single photodetector that collectively measure a time-dependent PPG waveform **62** corresponding to each of the LEDs. The sensor and algorithms for processing the PPG waveforms are described in detail in the following co-pending patent appli-

cation, the contents of which are fully incorporated herein by reference: BODY-WORN PULSE OXIMETER (U.S. Ser. No. 61/218,062; filed Jun. 17, 2009). The waveform **62** represents a time-dependent volumetric change in vasculature (e.g. arteries and capillaries) that is irradiated with the sensor's optical components. Volumetric changes are induced by a pressure pulse launched by each heartbeat that travels from the heart **148** to arteries and capillaries in the thumb according to the above-describe arterial pathway. Pressure from the pressure pulse forces a bolus of blood into this vasculature, causing it to expand and increase the amount of radiation absorbed, and decrease the transmitted radiation at the photodetector. The pulse shown in the PPG waveform **62** therefore represents the inverse of the actual radiation detected at the photodetector. It follows the QRS complex in the ECG waveform **61**, typically by about one to two hundred milliseconds. The temporal difference between the peak of the QRS complex and the foot of the pulse in the PPG waveform **62** is the PTT, which as described in detail below is used to determine blood pressure according to the Composite Technique. PPG waveforms generated by both the red and infrared LEDs are also processed by the CPU within the wrist-worn transceiver to determine SpO2, as is described in detail in the above-mentioned patent application. PTT-based measurements made from the thumb yield excellent correlation to blood pressure measured with a femoral arterial line. This provides an accurate representation of blood pressure in the central regions of the patient's body.

[0066] Each accelerometer generates three time-dependent ACC waveforms **64**, corresponding to the x, y, and z-axes, which collectively, indicate the patient's motion, posture, and activity level. The body-worn monitor, as described above, features three accelerometers that attach to the patient: one in the wrist-worn transceiver **72**, one in the ECG circuit **83**, and one near the bicep **87** that is included in the cable connecting these two components. The frequency and magnitude of change in the shape of the ACC waveform **64** indicate the type of motion that the patient is undergoing. For example, the waveform **64** can feature a relatively time-invariant component indicating a period of time when the patient is relatively still, and a time-variant component when the patient's activity level increases. Magnitudes of both components will depend on the relationship between the accelerometer and a gravity vector, and can therefore be processed to determine time-invariant features, such as posture and arm height. A frequency-dependent analysis of the time-variant components yields the type and degree of patient motion. Analysis of ACC waveforms **64** is described in detail in the above-mentioned patent applications, the contents of which have been fully incorporated herein by reference.

[0067] The OSC waveform **63** is generated from the patient's brachial artery **144** with the pneumatic system and a cuff-based sensor **84** during the pressure-dependent portion of the Composite Technique. It represents a time-dependent pressure, measured during inflation, which is applied to the brachial artery and measured by a digital pressure sensor within the pneumatic system. The waveform **63** is similar to waveforms measured during deflation by conventional oscillometric blood pressure monitors. For the Composite Technique, however, the waveform **63** is typically measured as the cuff gradually inflates, as is described in detail in the following patent application, the contents of which have been previously incorporated herein by reference: VITAL SIGN MONITOR FOR MEASURING BLOOD PRESSURE USING OPTICAL, ELECTRICAL, AND PRESSURE WAVEFORMS (U.S. Ser. No. 12/138,194; filed Jun. 12, 2008).

[0068] During a measurement, the pressure waveform **63** increases in a mostly linear fashion as pressure applied by the cuff **84** to the brachial artery **144** increases. When it reaches a pressure slightly below the patient's diastolic pressure, the brachial artery **144** begins to compress, resulting in a series time-dependent pulsations caused by each heartbeat that couple into the cuff **84**. The pulsations modulate the OSC waveform **63** with an amplitude that varies in a Gaussian-like distribution, with maximum modulation occurring when the applied pressure is equivalent to the patient's MAP. The pulsations can be filtered out and processed using digital filtering techniques, such as a digital bandpass filter that passes frequencies ranging from 0.5-20 Hz. The resulting waveform can be processed to determine SYS, DIA, and MAP, as is described in detail in the above-referenced patent application, the contents of which have been previously incorporated herein by reference. The cuff **84** and pneumatic system are removed from the patient's bicep once the pressure-dependent component of the Composite Technique is complete.

[0069] The high-frequency component of the OSC waveform **63** (i.e. the pulses) can be filtered out to estimate the exact pressure applied to the patient's brachial artery during oscillometry. According to the Composite Technique, PTT measured while pressure is applied will gradually increase as the brachial artery is occluded and blood flow is gradually reduced. The pressure-dependent increase in PTT can be fit with a model to estimate the patient-specific relationship between PTT and blood pressure. This relationship, along with SYS, MAP, and DIA determined from the OSC waveform during inflation-based oscillometry, is used during the Composite Technique's pressure-free measurements to determine blood pressure directly from PTT.

[0070] There are several advantages to making the indexing measurement during inflation, as opposed to deflation. Measurements made during inflation are relatively fast and comfortable compared to those made during deflation. Inflation-based measurements are possible because of the Composite Technique's relatively slow inflation speed (typically 5-10 mmHg/second) and the high sensitivity of the pressure sensor used within the body sensor. Such a slow inflation speed can be accomplished with a small pump that is relatively lightweight and power efficient. Moreover, measurements made during inflation can be immediately terminated once systolic blood pressure is calculated. This tends to be more comfortable than conventional cuff-based measurements made during deflation. In this case, the cuff typically applies a pressure that far exceeds the patient's systolic blood pressure; pressure within the cuff then slowly bleeds down below the diastolic pressure to complete the measurement.

[0071] A digital temperature sensor proximal to the ECG circuit **83** measures the patient's skin temperature at their torso. This temperature is an approximation of the patient's core temperature, and is used mostly for purposes related to trending and alarms/alerts.

Hardware System for Body-Worn Monitor

[0072] FIGS. **4**A and **4**B shows the specific form factor of the exemplary body-worn monitor **10** described in FIGS. **1** and **2**, and how the monitor **10** attaches to a patient **70**. Two configurations of the system are shown with these figures: FIG. **4**A shows the system used during the pressure-depen-

dent indexing portion of the Composite Technique, and includes a pneumatic, cuff-based system **85** attached to the patient's bicep; FIG. **4**B shows the system used for subsequent SpO2 and cNIBP measurements, which rely solely on PTT. The indexing measurement typically takes about 60 seconds, and is typically performed once at the beginning of a measurement, and every 4-8 hours afterwards. Once the indexing measurement is complete the cuff-based system **85** is typically removed from the patient. The remainder of the time the monitor **10** measures other vital signs and cNIBP according to the Composite Technique.

[0073] The body-worn monitor **10** features a wrist-worn transceiver **72** with a touch panel interface **73** that displays numerical values for all the vital signs. A wrist strap **90** affixes the transceiver **72** to the patient's wrist like a conventional wristwatch. A five-wire cable **92** connects the transceiver **72** to an optical sensor **94** that wraps around the base of the patient's thumb. During a measurement, the optical sensor **94** generates a time-dependent PPG which is processed along with an ECG to measure cNIBP and SpO2, as described above.

[0074] To determine ACC waveforms the body-worn monitor **10** features three separate accelerometers located at different portions on the patient's arm and chest. The first accelerometer is surface-mounted on a circuit board in the wrist-worn transceiver **72** and measures signals associated with movement of the patient's wrist. As described above, this motion can also be indicative of that originating from the patient's fingers, which will affect both the SpO2 and cNIBP measurements. The second accelerometer is included in a small bulkhead portion **96** included along the span of the cable **82**. During a measurement, a small piece of disposable tape, similar in size and shape to a conventional bandaid, affixes the bulkhead portion **96** to the patient's arm. In this way the bulkhead portion **96** serves two purposes: 1) it measures a time-dependent ACC waveform from the mid-portion of the patient's arm, thereby allowing their posture and arm height to be determined as described above; and 2) it secures the cable **82** to the patient's arm to increase comfort and performance of the body-worn monitor **10**, particularly when the patient is ambulatory.

[0075] The cuff-based module **85** features a pneumatic system **76** that includes a pump, manifold, two solenoid valves, pressure fittings, pressure sensor, analog-to-digital converter, microcontroller, and rechargeable Li:ion battery. These components are described in more detail with reference to FIG. **8**A-C. During an indexing measurement, the pneumatic system **76** inflates a disposable cuff **84** and performs the indexing measurement according to the Composite Technique, described above. The cuff **84** attached to the pneumatic system **76** is typically disposable and features an internal, airtight bladder that wraps around the patient's bicep to deliver a uniform pressure field. A pneumatic fitting on the cuff's outer surface snaps into a pressure fitting so that the pneumatic system sits flat against the cuff to simplify application and make the system as low-profile as possible. During the indexing measurement, pressure values are digitized by the internal analog-to-digital converter, and sent through a cable **86** according to the CAN protocol, along with SYS, DIA, and MAP blood pressures and any error codes, to the wrist-worn transceiver **72** for processing. Once the cuff-based measurement is complete, the cuff-based module **85** is removed from the patient's arm and the cable **86** is disconnected from the wrist-worn transceiver **72**. cNIBP is then determined using PTT, as described in detail above.

[0076] To determine an ECG, the body-worn monitor **10** features a small-scale, three-lead ECG circuit integrated directly into a bulkhead **74** that terminates an ECG cable **82**. The ECG circuit features an integrated circuit that collects electrical signals from three chest-worn ECG electrodes **78***a-c* connected through cables **80***a-c*. FIG. **7**A,B describe these systems in more detail. From these electrical signals the ECG circuit determines up to three ECG waveforms, each corresponding to a different lead, which are digitized using an analog-to-digital converter within the integrated circuit, and sent through the cable **82** to the wrist-worn transceiver **72** according to the CAN protocol. The bulkhead **74** also includes an accelerometer that measures motion associated with the patient's chest as described above, as well as a thermocouple to measure skin temperature.

[0077] FIGS. **5**A, **5**B show three-dimensional views of the wrist-worn transceiver **72** before and after receiving cables **82**, **86**, **89** from sensors worn on the patient's upper arm and torso, as well as the cable **92** that connects to the optical sensor. The transceiver **72** is sealed in a water-proof plastic casing **117** featuring electrical interconnects (not shown in the figure) on its bottom surface that interface to the terminal ends **111**, **115***a-c* of cables **82**, **86**, **89**, **92** leading to the monitor's various sensors. The electrical interconnects support serial communication through the CAN protocol, described in detail herein, particularly with reference to FIG. **11**. During operation, the transceiver's plastic casing **117** snaps into a plastic housing **106**, which features an opening **109** on one side to receive the terminal end **111** of the cable **92** connected to the optical sensor. On the opposing side the plastic housing **106** features three identical openings **104***a-c* that receive the terminal ends **115***a-c* of cables **82**, **86**, **89** connected to the ECG and accelerometer systems (cable **82**), the pneumatic cuff-based system (cable **86**), and ancillary systems (cable **89**) described above. In addition to being waterproof, this design facilitates activities such as cleaning and sterilization, as the transceiver contains no openings for fluids common in the hospital, such as water and blood, to flow inside. During a cleaning process the transceiver **72** is simply detached from the plastic housing **106** and then cleaned.

[0078] The transceiver **72** attaches to the patient's wrist using a flexible strap **90** which threads through two D-ring openings in the plastic housing **106**. The strap **90** features mated Velcro patches on each side that secure it to the patient's wrist during operation. The transceiver **72** houses the circuits **175**, **140** described in FIGS. **9**B and **10** and, as shown in FIG. **5**C, additionally features a touchpanel display **100** that renders a GUI **73**. The GUI **72**, for example, can be altered depending on the viewer (typically the patient or a medical professional). These features are described in more detail with reference to FIGS. **12**A-**12**C.

[0079] The electrical interconnects on the transceiver's bottom side line up with the openings **104***a-c*, and each supports the CAN protocol to relay a digitized data stream to the transceiver's internal CPU. The protocol for this process is described in detail with reference to FIG. **11**. This allows the CPU to easily interpret signals that arrive from the monitor's body-worn sensors, and means that these connectors are not associated with a specific cable. Any cable connecting to the transceiver **72** can be plugged into any opening **104***a-c*. As shown in FIG. **5**A, the first opening **104***a* receives the cable **82**

that transports digitized ECG waveforms determined from the ECG circuit and electrodes, and digitized ACC waveforms measured by accelerometers in the cable bulkhead and the bulkhead portion associated with the ECG cable **82**.

[0080] The second opening **104***b* receives the cable **86** that connects to the pneumatic cuff-based system used for the pressure-dependent indexing measurement. This connector receives a time-dependent pressure waveform delivered by the pneumatic system to the patient's arm, along with values for SYS, DIA, and MAP values determined during the indexing measurement. The cable **86** unplugs from the opening **104***b* once the indexing measurement is complete, and is plugged back in after approximately four hours for another indexing measurement.

[0081] The final opening **104***c* can be used for an auxiliary device, e.g. a glucometer, infusion pump, body-worn insulin pump, ventilator, or end-tidal CO2 monitoring system. As described with reference to FIG. **11**, digital information generated by these systems will include a header that indicates their origin so that the CPU can process them accordingly.

[0082] The transceiver includes a speaker **101** that allows a medical professional to communicate with the patient using a voice over Internet protocol (VOIP). For example, using the speaker **101** the medical professional can query the patient from a central nursing station or mobile phone connected to a wireless, Internet-based network within the hospital. Or the medical professional can wear a separate transceiver similar to the one shown in FIGS. **5**A-C, and use this as a communication device. In this application, the transceiver **72** worn by the patient functions much like a conventional cellular telephone or 'walkie talkie': it can be used for voice communications with the medical professional and can additionally relay information describing the patient's vital signs and motion.

[0083] FIGS. **6**A-**6**D show, respectively, side (**6**A,C) and top (**6**B,D) views of the wrist-worn transceiver **72**, and indicate how the Li:ion battery **93** can be removed using a 'hot swap' configuration so that the transceiver's data and wireless connection to the network are preserved after the battery change. Prior to the hot swap a battery-powered dongle **97** operating a firmware program is plugged into one of the openings **104***c*, as indicated by FIG. **6**A. After being plugged in, the dongle **97** sends a packet formatted according to the CAN protocol to the transceiver indicating that its battery is about to be replaced with one having a full charge. The transceiver receives the packet, and in response stores in non-volatile memory information that is normally not present when a device is initially powered on. This includes the patient's vital signs, cNIBP indexing parameters, trending information, and parameters concerning the transceiver's connection to the hospital network. Alternatively this information can be temporarily stored in a data buffer on the network, or on non-volatile memory associated with the dongle. Once this is complete, as indicated in FIG. **6**B, the transceiver's GUI renders a message that the battery **93** may be replaced. The depleted battery **93**, located on the bottom side of the transceiver **72**, can now be replaced with a charged battery. As shown in FIG. **6**D, after this operation is complete the GUI renders a virtual button that, once pressed, will reset the transceiver **72** to return it to its configuration before the battery swap. The transceiver then downloads the above-described information stored in either internal non-volatile memory, on the network, or in the dongle **97**, and then the dongle **97** is removed from the opening **104***c*. The transceiver **72** then returns to monitoring the patient.

Configurable ECG System

[0084] FIG. **7**A, B show a configurable ECG system **74** integrated within the body-worn monitor and can accommodate three, five, or twelve lead ECG configurations. The figure shows a system that includes three leads. As described above, the entire ECG system **74**, including systems for differentially amplifying, filtering, and digitizing ECG signals, is mounted on a circuit board disposed at a distal end of the ECG cable **82**. Preferably this system is based on a single ASIC which is a small-scale, low-power, single-chip solution and can be easily incorporated in the form factor shown in FIG. **7**A. Alternatively the ECG system can be composed of a series of discrete components making up the system's requisite filters and amplifiers. Using the CAN protocol, the ECG system **74** sends digital ECG information (e.g. ECG waveforms corresponding to each lead, heart rate and respiratory rate values, error codes) in the form of packets to the wrist-worn transceiver **72**. All ECG information is processed and digitized before being transmitted, which means a low-profile, five-wire cable **82** is adequate for three, five, and twelve-lead ECG systems. These different systems are typically embedded in unique cables, which can be easily swapped in and out and applied to the patient, and are labeled appropriately. A medical professional can incorporate them into the body-worn monitor simply by plugging the desired cable into any CAN connector on the wrist-worn transceiver **72**, and then attaching the appropriate ECG leads to the patient. The ECG system sends packets indicating how many leads it includes to the transceiver, which then processes this information accordingly.

[0085] FIG. **7**B shows a high-level schematic drawing of a three-lead ECG system **74** that connects to the wrist-worn transceiver **72** in FIG. **7**A. The ECG system **75** includes three electrode lead wires **80***a-c* that connect, respectively, to separate electrodes **78***a-c*. These are typically disposable adhesive electrodes worn on the patient's chest in an Einthoven's triangle configuration, as shown in FIG. **7**A. During a measurement, each electrode **78***a-c* measures a unique electrical signal from the patient's chest which then propagates through the lead wires **80***a-c* to the single-chip ECG processor **120**, described above. The ECG processor **120** differentially amplifies the ECG signals from each electrode **78***a-c*, and then filters and further amplifies the resulting waveform according to parameters which can be configured with a microcontroller **122** within the ECG system **74**. The microcontroller **122** interfaces to a crystal **126** (typically operating at 100 kHz) and a clock divider **127** that processes incoming timing packets, as is described in more detail below with reference to FIG. **11**. The ECG processor **120** includes an internal analog-to-digital converter that digitizes unique waveforms corresponding to each lead. It then processes the digitized waveforms to determine heart rate and parameters describing the patient's cardiac condition, e.g. VTAC, VFIB, and PVCs. The ECG processor **120** can also drive one of the electrodes (e.g. electrode **78***a*) with a modulated current, as described above, and detect this current along with breathing-induced modulations with a second electrode (e.g. electrode **78***b*) to determine respiratory rate according to impedance pneumography.

[0086] Once this information is determined, a CAN controller **124** within the ECG circuit **74** processes the resulting

data and transmits it as a series of CAN packets to the wrist-worn transceiver **72**, described in detail below. Values for heart rate, respiratory rate, and one of the time-dependent ECG waveforms (typically the Lead II waveform), along with alarms/alerts related to cardiac parameters such as VTAC, VFIB, and PVCs, are then displayed on the transceiver's GUI. One of the ECG waveforms is processed to determine blood pressure according to the Composite Technique. The transceiver **72** relays all the information it receives from the ECG system **74** to a server connected to the in-hospital network.

Removable Pneumatic System

[0087] FIGS. **8**A-C show an exemplary cuff-based system **85** used within the body-worn sensor to make pressure-dependent measurements according to the Composite Technique. Within the cuff-based system **85** is a pneumatic system **76** featuring a single motherboard **135** that includes components **139** similar to those shown in FIG. **7**B (microcontroller, crystal oscillator, clock divider, CAN transceiver) to process pressure-dependent waveforms and communicate with the wrist-worn transceiver **72**. To power these components, the pneumatic system **76** additionally includes a separate Li:ion battery (not shown in the figure) that connects through connector **137**. This battery is similar to that used in the transceiver **72**. A CAN connector **136** receives the cable **86** so that the pneumatic system **76** can transmit information to the wrist-worn transceiver **72**.

[0088] To measure the pressure waveform during a pressure-dependent measurement, the pneumatic system **76** features a small mechanical pump **133** that inflates a bladder within the cuff **84**, which is worn around the patient's bicep and features a pneumatic connector (not shown in the figure) that the pneumatic system **76** plugs into. The system **76** features two solenoid valves **132**, **163**, each controlled by a separate microcontroller mounted on the motherboard, and configured to connect the pump **133** to an outside air reservoir to inflate the cuff. Both solenoid valves **132**, **163** and the pump **133** connect through a manifold **131** to an opening **141** that attaches through a connector (not shown in the figure) to the bladder within the armband, and additionally to a pair of pressure sensors **134***a,b* that sense the pressure in the bladder. The opening **141** is covered by a screw-in plug **138** to prevent build up of debris in the manifold **131** when the pneumatic system **76** is not attached to the cuff **84**. A primary solenoid valve **132** is normally closed when not activated (i.e., when power is not applied). The secondary solenoid valve **163** has the opposite configuration, and is normally open when not activated. When both valves **132**, **163** are activated (i.e., when power is applied), the primary valve **132** opens and the secondary valve **163** closes, thus providing a path for the pump **133** to funnel air through the manifold **131** and to the cuff **84**. During a measurement, heartbeat-induced pulsations couple into the bladder as it inflates, and are subsequently mapped onto a pressure waveform. The pressure sensors **134***a,b* generate digital pressure waveforms which are filtered and processed by the microcontroller to measure blood pressure during inflation, as described above. The first pressure sensor **134***a* generates a pressure waveform that is used for the cuff-based indexing measurement, while the second sensor **134***b* is used as a back-up in case the first sensor **134***a* fails. Once complete, blood pressure values are used to index the PTT-based pressure-free measurements as described above. When the measurement is complete, the valves **132**, **163** are deactivated, and the pump **133** is no longer powered, causing the cuff **84** to rapidly deflate. The cuff **84** and cuff-based system **85** is then removed, and follow-on cNIBP measurements are calculated from PTT as described above.

Optical Sensor for cNIBP and SpO2

[0089] FIG. **9**A,B show an exemplary optical sensor **94** that measures PPG signals from both red and infrared LEDs which the wrist-worn transceiver **72** processes to determine cNIBP and SpO2. The sensor **94** includes a dual LED **150** operating at 660 and 905 nm, depending on the direction of bias, a photodetector **155** for detecting radiation from the LED **150** after it passes through a portion of the patient's thumb, and a laser-trimmed resistor **149** indicating the specific wavelength of the red portion of the dual LED **150**, as described below. Powering these components is a circuit **175** within the wrist-worn transceiver that generates time-dependent current pulses to drive the LEDs. The circuit **175** features an operational amplifier **180** that receives a control voltage ($V_{control}$) on its gating pin. The amplifier **180** is connected to a transistor **182** and resistor **181** that, along with a supply voltage of 3.3V (typically from a Li:ion battery), generate the current pulses used to drive the dual LED **150**. To select the biasing direction of the LED, and thus choose the wavelength that is emitted, the circuit **175** features red control lines **185**, **190** and infrared control lines **187**, **189** that connect directly to I/O lines in the CPU within the wrist-worn transceiver. During a measurement, current pulses flow from the 3.3V supply voltage, across one direction of the LED **150**, and ultimately through the transistor **182** and resistor **181** to ground **183**. The LED **150** is biased in a forward direction when control lines **185**, **190** are toggled closed, thereby supplying a drive current pulse of $i_{LED}=V_{control}/R_1$ to the LED **150** to generate red radiation. Voltage flowing across the LED **150** is also decreased because it is a diode. In this case the control lines **187**, **189** for infrared radiation are left open. This configuration persists for 100 μs, after which the red control lines **185**, **190** are switched closed, and the infrared control lines **187**, **189** are switched open. This biases the LED **150** in a backwards direction to generate infrared radiation according to the above-described drive current. The alternating process is repeated at 500 Hz.

[0090] During a measurement, the CPU in the wrist-worn transceiver determines the value of the resistor **149** by monitoring a voltage drop across it; this value, in turn, is compared to a value stored in memory to select the appropriate coefficients relating a parameter called a 'ratio of ratios' (RoR) to SpO2. This calculation is described in detail in the above-referenced patent application describing SpO2, the contents of which have been incorporated herein by reference. The probe **94** generates alternating red and infrared radiation at 500 Hz that passes through the base of the patient's thumb **151**, where it is partially absorbed by underlying vasculature according to the patient's heart rate and SpO2 values. Radiation that transmits through the thumb **151** illuminates a photodiode **155** that, in response, generates a photocurrent varying in magnitude with the degree of optical absorption in the patient's thumb. An amplifier circuit **140** beginning with a transimpedance amplifier **156** receives the photocurrent and converts it to a corresponding voltage which is then amplified and filtered to generate the PPGs waveforms with both red and infrared wavelengths used to determine SpO2 and cNIBP.

[0091] The amplifier circuit **140** features separate channels for amplifying and filtering signals corresponding to red radiation, infrared radiation, and ambient light detected by the photodiode **155** when the LED is not biased to generate

radiation. This occurs, for example, during the time periods when neither the red or infrared LED is driven. Once detected, the degree of ambient light can be subtracted from both the red and infrared signals to improve their resultant signal-to-noise ratio. The amplifier channel corresponding to red radiation is activated by a sample-and-hold integrated circuit **157** that is controlled by the same control lines **185**, **190** that drive the red LED, as shown in FIG. **9**B. When the red LED is driven, the sample-and-hold circuit **157** is switched on, while similar components **164**, **172** corresponding to the infrared signals and ambient light are switched off. The sample-and-hold circuit **157** samples and maintains an analog voltage from the transimpedance amplifier **156**, which then passes through a low-pass filter **158** characterized by a 20 Hz cutoff. This filter removes any high-frequency noise (e.g. 60 Hz electrical noise) that is not related to the PPG waveform, and yields a preliminary waveform that is digitized with an analog-to-digital converter **176**, and processed as described above to generate a DC portion of the PPG. The preliminary waveform then passes through a high-pass filter **160** with a cutoff of 0.1 Hz to remove the DC portion and leave only the AC portion, which typically represents about 0.5-1% of the total signal magnitude. The AC portion is further amplified with a standard instrumentation amplifier **162** featuring a programmable gain that is controlled with a **1.65** reference voltage and a digital potentiometer (not shown in the figure; this component may be included directly in the instrumentation amplifier) featuring a variable resistance controlled by the CPU within the wrist-worn transceiver. The CPU selects the resistance (according to a predetermined command) and corresponding gain to maximize the dynamic range of the analog-to-digital converter **176**. This process results in an amplified version of the AC portion of the red PPG waveform, which is then digitized with the analog-to-digital converter **176** and then processed as described above.

[0092] The above-described filtering and amplification processes are repeated when the infrared LED and a sample-and-hold integrated circuit **164** corresponding to the infrared channel are activated with infrared control lines **187**, **189**. The low-pass **166** and high-pass **168** filters corresponding to this channel are identical to those used for the red channel. The instrumentation amplifier **170** is also identical, but is controlled by a separate digital potentiometer to have a unique, uncoupled gain. This is because the infrared PPG waveform typically has a relatively large amplitude, and thus requires less amplification, than the red PPG waveform. The channel corresponding to ambient light only requires processing of DC signals, and thus includes a sample-and-hold integrated circuit **172** that passes an analog voltage to a low-pass filter **174** featuring a 20 Hz cutoff. The filtered value corresponding to ambient light is then digitized with the analog-to-digital converter and then processed as described above.

[0093] A five-wire cable, similar to that used for the ECG and pneumatic systems, connects the thumb-worn optical sensor to the wrist-worn transceiver. Black circles in FIG. **9**B indicate where wires in the cable connect to circuit elements in the thumb-worn sensor (only four dots are shown; the fifth connection is a conducting shield for the remaining 4 wires). Note that the value for the laser-trimmed resistor is determined by a voltage drop when both control lines for the red **185**, **190** and infrared **187**, **189** are open. In this configuration there is no bias across the LED, so radiation is not emitted, but there is a small voltage drop across the infrared control lines **187**, **189** due to the resistor **149**. The resistor value is chosen to be sufficiently small so that only a small amount of current is drawn during an actual measurement.

Communicating with Multiple Systems Using the CAN Protocol

[0094] As described above, the ECG, ACC, and pneumatic systems within the body-worn system can send digitized information to the wrist-worn transceiver through the CAN protocol. FIG. **11** shows a schematic drawing indicating how CAN packets **201***a-d*, **212***a-e* transmitted between these systems facilitate communication. Specifically, each of the ACC **14**, ECG **74**, pneumatic **76**, and auxiliary **45** systems include a separate analog-to-digital converter, microcontroller, frequency-generating crystal oscillator (typically operating at 100 kHz), and real-time clock divider that collectively generate and transmit digital data packets **201***a-d* according to the CAN protocol to the wrist-worn transceiver **72**. Each crystal uses the internal real-time clock on the internal microprocessor within the respective system. This allows the microcontroller within each system to be placed in a low-power state in which its real-time operating system (RTOS) dispatch system indicates that it is not ready to run a task. The real-time clock divider is programmed to create an interrupt which wakes up the microcontroller every 2 milliseconds.

[0095] The wrist-worn transceiver **72** features a 'master clock' that generates real-time clock 'ticks' at the sampling rate (typically 500 Hz, or 2 ms between samples). Each tick represents an incremented sequence number. Every second, the wrist-worn transceiver **72** transmits a packet **212***e* over the CAN bus that digitally encodes the sequence number. One of the criteria for accurate timing is that the time delay between the interrupt and the transmission of the synchronizing packet **212***e*, along with the time period associated with the CAN interrupt service routine, is predictable and stable. During initialization, the remote CAN buses do not sleep; they stay active to listen for the synchronization packet **212***e*. The interrupt service routine for the synchronization packet **212***e* then establishes the interval for the next 2 millisecond interrupt from its on-board, real-time crystal to be synchronized with the timing on the wrist-worn transceiver **72**. Offsets for the packet transmission and interrupt service delays are factored into the setting for the real-time oscillator to interrupt synchronously with the microprocessor on the wrist-worn transceiver **72**. The magnitude of the correction factor to the real-time counter is limited to 25% of the 2 millisecond interval to ensure stability of this system, which represents a digital phase-locked loop.

[0096] When receipt of the synchronization packet **212***e* results in a timing correction offset of either a 0, +1, or −1 count on the remote system's oscillator divider, software running on the internal microcontroller declares that the system is phase-locked and synchronized. At this point, it begins its power-down operation and enables measurement of data as described above.

[0097] Each remote system is driven with a 100 kHz clock, and a single count of the divider corresponds to 20 microseconds. This is because the clock divider divides the real-time clock frequency by a factor of 2. This is inherent in the microcontroller to ensure that the clock has a 50% duty cycle, and means the clock can drift+/−20 microseconds before the actual divider chain count will disagree by one count, at which time the software corrects the count to maintain a phase-locked state. There is thus a maximum of 40 microseconds of timing error between data transmitted from the remote systems over the CAN bus. Blood pressure is the one

vital sign measured with the body-worn monitor that is calculated from time-dependent waveforms measured from different systems (e.g. PPG and ECG waveforms). For this measurement, the maximum 40-microsecond timing error corresponds to an error of +/−0.04 mmHg, which is well within the error (typically+/−5 mmHg) of the measurement.

[0098] In order to minimize power consumption, the wrist-worn transceiver **72** and remote systems **14**, **74**, **76**, **45** power down their CAN bus transceivers between data transfers. During a data transfer, each system generates a sequence number based on the synchronization packet **212***e*, and includes this in its packet. The sequence number represents the interval between data transfers in intervals of 2 milliseconds. It is a factor of 500 (e.g. 2, 4, 5, 10) that is the number of 2 millisecond intervals between transfers on the CAN bus. Each remote system enables its CAN bus during the appropriate intervals and sends its data. When it has finished sending its data, it transmits a 'transmit complete' packet indicating that the transmission is complete. When a device has received the 'transmit complete' packet it can disable its CAN transceiver to further reduce power consumption.

[0099] Software in each of the ACC **14**, ECG **74**, pneumatic **76**, and auxiliary **45** systems receive the sequence packet **212***e* and the corresponding sequence number, and set their clocks accordingly. There is typically some inherent error in this process due to small frequency differences in the crystals (from the ideal frequency of 100 kHz) associated with each system. Typically this error is on the order of microseconds, and has only a small impact on time-dependent measurements, such as PTT, which are typically several hundred milliseconds.

[0100] Once timing on the CAN bus is established using the above-described procedure, each of the ACC **14**, ECG **74**, and pneumatic **76** systems generate time-dependent waveforms that are transmitted in packets **201***a-d*, each representing an individual sample. Each packet **201***a-d* features a header portion which includes the sequence number **212***a-d* and an initial value **210***a-d* indicating the type of packet that is transmitted. For example, accelerometers used in the body-worn system are typically three-axis digital accelerometers, and generate waveforms along the x, y, and z-axes. In this case, the initial value **210***a* encodes numerical values that indicate: 1) that the packet contains ACC data; and 2) the axis (x, y, or z) over which these data are generated. Similarly, the ECG system **204** can generate a time-dependent ECG waveform corresponding to Lead I, II, or III, each of which represents a different vector measured along the patient's torso. Additionally, the ECG system **204** can generate processed numerical data, such as heart rate (measured from time increments separating neighboring QRS complexes), respiratory rate (from an internal impedance pneumography component), as well as alarms calculated from the ECG waveform that indicate problematic cardiovascular states such as VTAC, VFIB, and PVCs. Additionally, the ECG system can generate error codes indicating, for example, that one of the ECG leads has fallen off. The ECG system typically generates an alarm/alert, as described above, corresponding to both the error codes and potentially problematic cardiovascular states. In this case, the initial value **210***b* encodes numerical values that indicate: 1) that the packet contains ECG data; 2) the vector (Lead I, II, or III) corresponding to the ECG data; and 3) an indication if a cardiovascular state such as VTAC, VFIB, or PVCs was detected by the ECG system.

[0101] The pneumatic system **76** is similar to the ECG system in that it generates both time-dependent waveforms (i.e. a pressure waveform, measured during oscillometry, characterizing the pressure applied to the arm and subsequent pulsations measured during an oscillometric measurement) and calculated vital signs (SYS, DIA, and MAP measured during oscillometry). In some cases errors are encountered during the oscillometric blood pressure measurement. These include, for example, situations where blood pressure is not accurately determined, an improper OSC waveform, over-inflation of the cuff, or a measurement that is terminated before completion. In these cases the pneumatic system **76** generates a corresponding error code. For the pneumatic system **76** the initial value **210***c* encodes numerical values that indicate: 1) that the packet contains blood pressure data; 2) an indication that the packet includes an error code.

[0102] In addition to the initial values **210***a-d*, each packet **201***a-d* includes a data field **214***a-d* that encodes the actual data payload. Examples of data included in the data fields **214***a-d* are: 1) sampled values of ACC, ECG, and pressure waveforms; 2) calculated heart rate and blood pressure values; and 3) specific error codes corresponding to the ACC **14**, ECG **74**, pneumatic **76**, and auxiliary **25** systems.

[0103] Upon completion of the measurement, the wrist-worn transceiver **72** receives all the CAN packets **201***a-d*, and synchronizes them in time according to the sequence number **212***a-d* and identifier **210***a-d* in the initial portions **216** of each packet. Every second, the CPU updates the time-dependent waveforms and calculates the patient's vital signs and motion-related properties, as described above. Typically these values are calculated as a 'rolling average' with an averaging window ranging from 10-20 seconds. The rolling average is typically updated every second, resulting in a new value that is displayed on the wrist-worn transceiver **72**. Each packet received by the transceiver **72** is also wirelessly retransmitted as a new packet **201***b*' to a remote computer **43** connected to an in-hospital network. The new packet **201***b*' includes the same header information **210***b*', **212***b*' and data field information **214***b*' as the CAN packets transmitted between systems within the body-worn monitor. Also transmitted are additional packets encoding the cNIBP, SpO2, and processed motion states (e.g. posture, activity level, degree of motion), which unlike heart rate and SYS, DIA, and MAP are calculated by the CPU in the wrist-worn transceiver. Upon receipt of the packet **201***b*', the remote computer **43** displays vital signs, waveforms, motion information, and alarms/alerts, typically with a large monitor that is easily viewed by a medical professional. Additionally the remote computer **43** can send information through the hospital network (e.g. in the case of an alarm/alert), and store information in an internal database.

Displaying Information Using Graphical User Interfaces

[0104] Referring to FIGS. **12**A-C, the transceiver **72** features a touchpanel display **100** that renders a multi-window GUI **73** which can be tailored to both medical professionals and the patient. To select the appropriate GUI, the transceiver **72** includes a small-scale infrared barcode scanner **102** that emits radiation **120** to scan a barcode **122** worn on a badge **121** of a medical professional. Information encoded on the barcode **122** is compared to a database stored within the transceiver **72** to indicate, for example, that a nurse or doctor is viewing the user interface. This database can be updated through the hospital's network. In response, the GUI **73** dis-

plays vital sign data, waveforms, alarms/alerts and other medical diagnostic information appropriate for medical professionals, as shown by the screen **126** in FIG. **12**B. Using this GUI **73**, the medical professional can view the vital sign information, set alarm parameters, and enter information about the patient (e.g. their posture, demographic information, medication, or medical condition). The nurse can press a 'Patient View' button on the GUI **73** indicating that these operations are complete. The patient view is shown by the screen **125** in FIG. **12**C, and purposefully lacks any content related to vital signs. Instead is designed to be relatively generic, featuring the time, date, and icons indicating the patient's activity level, whether or not an alarm has been generated, battery life, and wireless signal strength. The GUI also features a graphical 'call nurse' button that, once depressed, wirelessly sends a signal to the central nursing station indicating that the patient needs assistance from a nurse. The patient view screen **125** includes a button labeled 'UNLOCK' that, once activated, allows a nurse or doctor to activate the medical professional view **126** shown in FIG. **1***l* B. Tapping the UNLOCK button powers the barcode scanner in the body-worn monitor; this scans a barcode printed on a badge of the nurse of doctor, as described above, and prompts the monitor to render the medical professional view screen **126**, shown in FIG. **12**B.

[0105] The medical professional view screen **126** is designed to have a 'look and feel' similar to each area **108** of the GUI on the nursing station computer, as shown in FIG. **15**A. This makes it relatively easy for the nurse to interpret information rendered on both the body-worn monitor and remote monitor. The screen **126** features fields for a patient identifier, numerical values for vital signs, a time-dependent ECG waveform with a span of approximately 5 seconds, and icons indicating battery life, wireless signal strength, and whether or not an alarm has been generated. A fixed bar proximal to the ECG waveform indicates a signal strength of 1 mV, as required by the AAMI:ANSI EC13 specification for cardiac monitors.

[0106] The GUI operating on both the body-worn module and the remote monitor can render graphical icons that clearly identify patient activity states, determined as described above from the ACC waveforms. FIG. **13** shows examples of such icons **105***a-h*, and Table 1, below, describes how they correspond to specific patient activity states. As shown in FIGS. **12**A-C and **15**A, these icons are used in GUIs for both the body-worn monitor and remote monitor.

TABLE 1

description of icons shown in FIG. 13 and used in GUIs for both body-worn monitor and remote monitor

Icon	Activity State
105a	Standing
105b	Falling
105c	Resting; lying on side
105d	Convulsing
105e	Walking
105f	Sitting
105g	Resting; lying on stomach
105h	Resting; lying on back

[0107] FIG. **14** indicates how the wrist-worn transceiver **72** can communicate wirelessly with either a networked computer **198** (e.g. a tablet computer located at a central nursing station) or a hand-held computer **199** (e.g. a cell phone or PDA, typically carried by the medical professional). The specific form of the communication can be determined either manually or automatically. For example, in a normal mode of operation the patient wears the transceiver in their hospital room, and it wirelessly transmits information as described above though a wireless network to the computer **198**. Typically this is a network based on 802.11, which is commonplace in the hospital. In a normal mode of operation the computer is associated with a group of patients in an area of the hospital (e.g. a bay of hospital beds, or an ED), and the computer **198** renders a GUI that shows summary information relating to vital signs, motion-related parameters, and alarms/alerts for each patient in the area. A medical professional can 'drill down' on a particular patient by clicking on the portion of the GUI that displays their information.

[0108] In another mode of operation, the medical professional can carry the computer **198** into the patient's hospital room for a consultation. In this case, software running on the computer **198** can detect a relatively strong wireless signal strength (RSSI value) associated with the proximal patient, and render their information with the GUI. Alternatively, as described above, the medical professional can manually select this information.

[0109] Most portable cellular phones and PDAs have built-in wireless capabilities based on 802.11 and 802.15.4, and thus the wrist-worn transceiver **72** can wirelessly communicate with these devices with a peer-to-peer communication protocol. Typically, in this case, the portable device **199** includes a software application that has been downloaded into its memory, typically from a web-based server. To monitor a particular patient, the medical professional uses the software application to select a particular patient. This process 'pairs' the portable device with the patient's wrist-worn transceiver **72**. Once paired, the transceiver sends information for the particular patient to the portable device **199**, which then displays it for the medical professional. In other embodiments, the portable device can communicate with the hospital network so that the medical professional can view information for a particular patient even if they are in a different area of the hospital. In still other embodiments, the hospital network is accessible through a cellular network associated with the portable device, and the medial professional can select and view information for a particular patient from any remote location, provided it has good coverage in the cellular network.

[0110] FIGS. **15**A and **15**B show patient (**106** in FIG. **15**A) and map (**107** in FIG. **15**B) views from a GUI typically rendered on a remote monitor **198**, such as that described above. For example, the different views **106**, **107** are generated when a medical professional clicks icons on a GUI rendered by the remote monitor **198** that correspond, respectively, to vital signs **197** and location **196**. To generate the GUI the remote monitor **198** simultaneously communicates with multiple body-worn monitors, each deployed on a patient in an area of the hospital. The patient view **106** is designed to give a medical professional, such as a nurse or doctor, a quick, easy-to-understand status of all the patients of all the patients in the specific hospital area. In a single glance the medical professional can determine their patients' vital signs, measured continuously by the body-worn monitor, along with their activity state and alarm status. The view **106** features a separate area **108** corresponding to each patient. Each area **108** includes text fields describing the name of the patient and supervising clinician; numbers associated with the patient's

bed, room, and body-worn monitor; and the type of alarm generated from the patient. As described above, this area **108** has a similar 'look and feel' to the interface rendered on the wrist-worn transceiver. Graphical icons, similar to those shown in FIG. **14**, indicate the patient's activity level. Additional icons show the body-worn monitor's battery power, wireless signal strength, and whether or not an alarm has been generated. Each area **108** also clearly indicates numerical values for each vital sign measured continuously by the body-worn monitor. The monitor displaying the patient view **106** typically includes a touchpanel. Tapping on the patient-specific area **108** generates a new view (not shown in the figure) that expands all the information in the area **108**, and additionally shows time-dependent ECG and PPG waveforms corresponding to the patient.

[0111] FIG. **15**B shows a map view **107** that indicates the location and activity state of each patient in the hospital area. Each patient's location is typically determined by processing the wireless signal from their body-worn monitor (e.g., by triangulating on signals received by neighboring 802.11 base stations, or simply using proximity to the base station) or by using more advanced methods (e.g. time-of-flight analysis of the wireless signal, or conventional or network-assisted GPS), both of which are done using techniques known in the art. The patient's location is mapped to a grid representing the distribution of beds in the hospital area to generate the map view **107**. The map view **107** typically refreshes every 10-20 seconds, showing an updated location and activity state for each patient.

Continuous Patient Monitoring in the Hospital

[0112] FIG. **16** shows one possible sequence **278** of how the body-worn monitor described above can characterize a hospitalized patient using the Composite Technique, which includes an initial pressure-dependent (step **282***a*), pressure-free (steps **281***a*, **281***b*, **281***c*), and intermediate pressure-dependent (steps **282***b*, **282***c*) measurements for a patient undergoing an extended hospital stay. During the stay, a medical professional applies the body-worn monitor to the patient (step **280**). This takes about 1 minute. The medical professional may also collect biometric information from the patient, such as their age, weight, height, gender, ethnicity, and whether they are on blood pressure medications, and enter these into the monitor using a GUI and touchpanel, as described above. This information is then communicated wirelessly through the hospital network. Going forward, the CPU within the wrist-worn transceiver first initiates a pressure-free measurement (step **281***a*) for about 1 minute, wherein the body-worn monitor collects PPG and ECG waveforms from the patient to determine their heart rate and PTT values. In the absence of an absolute blood pressure measurement from the Composite Technique's pressure-dependent measurement, the microprocessor may use PTT and the patient's biometric information to estimate blood pressure, as is described in the following co-pending patent application, the contents of which are fully incorporated herein by reference: 1) DEVICE AND METHOD FOR DETERMINING BLOOD PRESSURE USING 'HYBRID' PULSE TRANSIT TIME MEASUREMENT (U.S. Ser. No. 60/943,464; filed Jun. 12, 2007); and 2) VITAL SIGN MONITOR FOR CUFFLESSLY MEASURING BLOOD PRESSURE CORRECTED FOR VASCULAR INDEX (U.S. Ser. No. 12/138,199; filed Jun. 12, 2008). This process typically determines systolic and diastolic blood pressure with an accuracy of about ±10-15 mmHg.

[0113] The initial, approximate value for the patient's blood pressure and heart rate determined during the first pressure-free measurement (step **281***a*) can then be used to set certain parameters during the following first pressure-dependent measurement (step **282***a*). Knowledge of these parameters may ultimately increase the accuracy of the initial pressure-dependent measurement (step **282***a*). Such parameters, for example, may include inflation time and rate, fitting parameters for determining the time-dependent increase in PTT and the time-dependent decrease in PPG waveform amplitude during the pressure-dependent measurement. Of particular importance is an accurate value of the patient's heart rate determined during the first pressure-free measurement (step **281***a*). Since both PTT and amplitude can only be measured from a pulse induced by a heartbeat, the algorithm can process heart rate and use it in the fitting process to accurately determine the pressure at which the PPG waveform amplitude crosses zero.

[0114] Using parameters such as heart rate and initial estimated blood pressure, the first pressure-dependent measurement (step **282***a*) determines a relationship between PTT and blood pressure as described above. This takes about 60 seconds. This measurement may occur automatically (e.g., after about 1 minute), or may be driven by the medical professional (e.g., through a button press). The microprocessor then uses this relationship and a measured value of PTT to determine blood pressure during the following pressure-free measurement (step **281***b*). This measurement step typically proceeds for a well-defined period of time (typically 4-8 hours), during which it continuously determines blood pressure. Typically, the body sensor averages PTT values over a 10-20 second period, and displays a new blood pressure measurement every second using a rolling average.

[0115] The microprocessor may also perform a pre-programmed or automated intermediate pressure-dependent measurement (step **282***b*) to correct any drift in the blood pressure measurement. This measurement is similar to the initial pressure-dependent measurement **282***a*. At some later time, if the patient experiences a sudden change in other vital signs (e.g., respiratory rate, heart rate, body temperature), the CPU in the wrist-worn transceiver may analyze this condition and initiate another pressure-dependent blood pressure measurement (step **282***c*) to most accurately determine the patient's blood pressure.

[0116] In addition to those methods described above, a number of additional methods can be used to calculate blood pressure from the PPG and ECG waveforms. These are described in the following co-pending patent applications, the contents of which are incorporated herein by reference: 1) CUFFLESS BLOOD-PRESSURE MONITOR AND ACCOMPANYING WIRELESS, INTERNET-BASED SYSTEM (U.S. Ser. No. 10/709,015; filed Apr. 7, 2004); 2) CUFFLESS SYSTEM FOR MEASURING BLOOD PRESSURE (U.S. Ser. No. 10/709,014; filed Apr. 7, 2004); 3) CUFFLESS BLOOD PRESSURE MONITOR AND ACCOMPANYING WEB SERVICES INTERFACE (U.S. Ser. No. 10/810,237; filed Mar. 26, 2004); 4) VITAL SIGN MONITOR FOR ATHLETIC APPLICATIONS (U.S.S.N; filed Sep. 13, 2004); 5) CUFFLESS BLOOD PRESSURE MONITOR AND ACCOMPANYING WIRELESS MOBILE DEVICE (U.S. Ser. No. 10/967,511; filed Oct. 18,

2004); 6) BLOOD PRESSURE MONITORING DEVICE FEATURING A CALIBRATION-BASED ANALYSIS (U.S. Ser. No. 10/967,610; filed Oct. 18, 2004); 7) PERSONAL COMPUTER-BASED VITAL SIGN MONITOR (U.S. Ser. No. 10/906,342; filed Feb. 15, 2005); 8) PATCH SENSOR FOR MEASURING BLOOD PRESSURE WITHOUT A CUFF (U.S. Ser. No. 10/906,315; filed Feb. 14, 2005); 9) PATCH SENSOR FOR MEASURING VITAL SIGNS (U.S. Ser. No. 11/160,957; filed Jul. 18, 2005); 10) WIRELESS, INTERNET-BASED SYSTEM FOR MEASURING VITAL SIGNS FROM A PLURALITY OF PATIENTS IN A HOSPITAL OR MEDICAL CLINIC (U.S. Ser. No. 11/162,719; filed Sep. 9, 2005); 11) HAND-HELD MONITOR FOR MEASURING VITAL SIGNS (U.S. Ser. No. 11/162,742; filed Sep. 21, 2005); 12) CHEST STRAP FOR MEASURING VITAL SIGNS (U.S. Ser. No. 11/306,243; filed Dec. 20, 2005); 13) SYSTEM FOR MEASURING VITAL SIGNS USING AN OPTICAL MODULE FEATURING A GREEN LIGHT SOURCE (U.S. Ser. No. 11/307,375; filed Feb. 3, 2006); 14) BILATERAL DEVICE, SYSTEM AND METHOD FOR MONITORING VITAL SIGNS (U.S. Ser. No. 11/420,281; filed May 25, 2006); 15) SYSTEM FOR MEASURING VITAL SIGNS USING BILATERAL PULSE TRANSIT TIME (U.S. Ser. No. 11/420,652; filed May 26, 2006); 16) BLOOD PRESSURE MONITOR (U.S. Ser. No. 11/530,076; filed Sep. 8, 2006); 17) TWO-PART PATCH SENSOR FOR MONITORING VITAL SIGNS (U.S. Ser. No. 11/558,538; filed Nov. 10, 2006); and, 18) MONITOR FOR MEASURING VITAL SIGNS AND RENDERING VIDEO IMAGES (U.S. Ser. No. 11/682,177; filed Mar. 5, 2007).

[0117] Other embodiments are also within the scope of the invention. For example, other measurement techniques, such as conventional oscillometry measured during deflation, can be used to determine SYS for the above-described algorithms. Additionally, processing units and probes for measuring SpO2 similar to those described above can be modified and worn on other portions of the patient's body. For example, probes with finger-ring configurations can be worn on fingers other than the thumb. Or they can be modified to attach to other conventional sites for measuring SpO2, such as the ear, forehead, and bridge of the nose. In these embodiments the processing unit can be worn in places other than the wrist, such as around the neck (and supported, e.g., by a lanyard) or on the patient's waist (supported, e.g., by a clip that attaches to the patient's best). In still other embodiments the probe and processing unit are integrated into a single unit.

[0118] Still other embodiments are within the scope of the following claims.

What is claimed is:

1. A system for monitoring a patient, comprising:

a processing system configured to be worn on a patient's body comprising at least three serial ports and a processor in electrical communication with each serial port, each serial port configured to receive a digital data stream from a unique sensor worn on the patient's body;

an ECG system comprising: i) a connecting portion configured to connect to a plurality of electrodes configured to be worn on the patient; ii) a differential amplifier configured to receive electrical signals from each of the plurality of electrodes and process them to generate an analog ECG waveform; iii) an analog-to-digital converter configured to convert the analog ECG waveform into a digital ECG waveform; iv) and a transceiver component configured to transmit a digital ECG data stream comprising the digital ECG waveform or information calculated therefrom through a first serial port and to the processing system;

an oscillometry system comprising: i) a cuff configured to be worn on the patient and apply pressure to a portion of the patient; ii) a pneumatic system configured to inflate the cuff and detect pressure therein representing an analog oscillometric waveform; iii) an analog-to-digital converter configured to convert the analog oscillometric waveform into a digital oscillometric waveform; iv) a transceiver component configured to transmit a digital oscillometric data stream comprising the digital oscillometric waveform or values calculated therefrom through a second serial port and to the processing system; and

a third system configured to generate a third digital data stream and transmit the third digital data stream or values calculated therefrom through a third serial port to the processing system.

2. A system for monitoring a patient, comprising:

a processing system configured to be worn on a patient's body comprising multiple serial ports, each configured to receive a digital data stream from a sensor worn on the patient's body, and a processor in electrical communication with each serial port;

an ECG system configured to generate and transmit a digital ECG data stream comprising a digital ECG waveform or values calculated therefrom through a first serial port and to the processing system;

an oscillometry system configured to generate and transmit a digital oscillometric data stream comprising a digital oscillometric waveform or values calculated therefrom through a second serial port and to the processing system; and

a third system configured to generate and transmit a third digital data stream or values calculated therefrom through a third serial port to the processing system.

3. A system for monitoring a patient, comprising:

an ECG system configured to generate and transmit a digital ECG data stream comprising a digital ECG waveform or values calculated therefrom through a first serial port and to a processing system;

an oscillometry system configured to generate and transmit a digital oscillometric data stream comprising a digital oscillometric waveform or values calculated therefrom through a second serial port and to the processing system;

an optical sensor configured to generate and transmit an optical waveform to the processing system; and,

a processing system configured to be worn on a patient's body comprising multiple serial ports, a first serial port configured to receive the digital ECG data stream, the second serial port configured to receive the digital oscillometric data stream, the processing system configured to calculate a blood pressure value from the digital ECG data stream, the digital oscillometric data stream, and the optical waveform.

4. A system for measuring blood pressure from a patient, comprising:

a central processing system configured to be worn on the patient's body;

an ECG system comprising an ECG sensor for measuring a digital ECG waveform and an ECG processor, the ECG processor configured to digitally communicate and

synchronize with the central processing system; an optical system comprising an optical sensor for measuring an optical waveform; the central processing system configured to receive and process the digital ECG waveform and optical waveform to calculate blood pressure.

5. The system of claim **1**, wherein the ECG system is configured transmit a digital ECG data stream comprising a header portion and a data portion, the header portion indicating that the data portion comprises ECG information.

6. The system of claim **5**, wherein the data portion comprises information indicating one of an ECG waveform, heart rate, error code, and a physiological state corresponding to the patient.

7. The system of claim **1**, wherein the oscillometry system is configured transmit a digital oscillometry data stream comprising a header portion and a data portion, the header portion indicating that the data portion comprises oscillometry information.

8. The system of claim **7**, wherein the data portion comprises information indicating one of a pressure waveform, blood pressure, heart rate, error code, and a physiological state corresponding to the patient.

9. The system of claim **1**, wherein the third system is configured transmit a digital data stream comprising a header portion and a data portion, the header portion indicating the system that generates the biometric signal.

10. The system of claim **9**, wherein the third system is configured to deliver a therapeutic agent to the patient.

11. The system of claim **10**, wherein the third system is selected from the group consisting of an infusion pump, insulin pump, hemodialysis machine, and a mechanical ventilation system.

12. The system of claim **11**, wherein the data portion comprises information selected from the group consisting of a type of compound delivered to the patient, a dosage of a compound to be delivered to the patient, and a rate of delivery of a compound to be delivered to the patient.

13. The system of claim **9**, wherein the third system is a sensor configured to measure a signal from the patient.

14. The system of claim **13**, wherein the sensor is selected from the group consisting of a pulse oximeter, EEG monitor, temperature sensor, respiratory rate sensor, motion sensor, camera, impedance plethysmography sensor, optical spectrometer, end-tidal CO2 monitor, and skin-conductance sensor.

15. The system of claim **14**, wherein the data portion comprises information indicating one of PPG waveform, heart rate, pulse rate, SpO2 value, EEG waveform, temperature, respiratory rate, degree of motion, posture, activity level, arm height, an image, optical property of the patient, and electrical property of the patient.

16. The system of claim **1**, wherein both the ECG system and the oscillometry system comprise a separate microprocessor, both of which are in communication with the processor comprised by the processing system.

17. The system of claim **16**, wherein the processor comprised by the processing system is configured to send a packet to the microprocessor comprised by the ECG system to synchronize the processor and microprocessor.

18. The system of claim **17**, wherein the microprocessor comprised by the ECG system is configured to adjust a timing parameter in response to the packet.

19. The system of claim **16**, wherein the processor comprised by the processing system is configured to send a packet to the microprocessor comprised by the oscillometry system to synchronize the processor and microprocessor.

20. The system of claim **19**, wherein the microprocessor comprised by the oscillometry system is configured to adjust a timing parameter in response to the packet.

21. The system of claim **1**, wherein each of the processing system, ECG system, and oscillometry system comprise a serial transceiver.

22. The system of claim **21**, wherein the serial transceiver comprised by each of the processing system, ECG system, and oscillometry system is a CAN transceiver.

* * * * *