US 20080052243A1

(19) United States

(12) Patent Application Publication

(10) Pub. No.: US 2008/0052243 A1

(43) Pub. Date: Feb. 28, 2008

Narayanaswami et al.

(54) PORTABLE INTELLIGENT SHOPPING DEVICE

(75) Inventors: **Chandrasekhar Narayanaswami**, Wilton, CT (US); **Mandayam T. Raghunath**, Bangalore (IN)

Correspondence Address:
MICHAEL BUCHENHORNER, P.A.
8540 SW 83 STREET
SUITE 100
MIAMI, FL 33143 (US)

(73) Assignee: **International Business Machines Corporation**, Armonk, NY (US)

(21) Appl. No.: **11/926,085**

(22) Filed: **Oct. 28, 2007**

Related U.S. Application Data

(62) Division of application No. 10/429,372, filed on May 5, 2003.

Publication Classification

(51) **Int. Cl.**

G06Q	*30/00*	(2006.01)
H04K	*1/00*	(2006.01)
H04L	*9/00*	(2006.01)

(52) **U.S. Cl.** **705/64**

(57) **ABSTRACT**

A mobile information processing device includes a display driver for displaying a bar code, the bar code including a representation of a user's acceptance of a price requested by a store for a selected item for purchase. The bar code may be one-dimensional or two-dimensional.

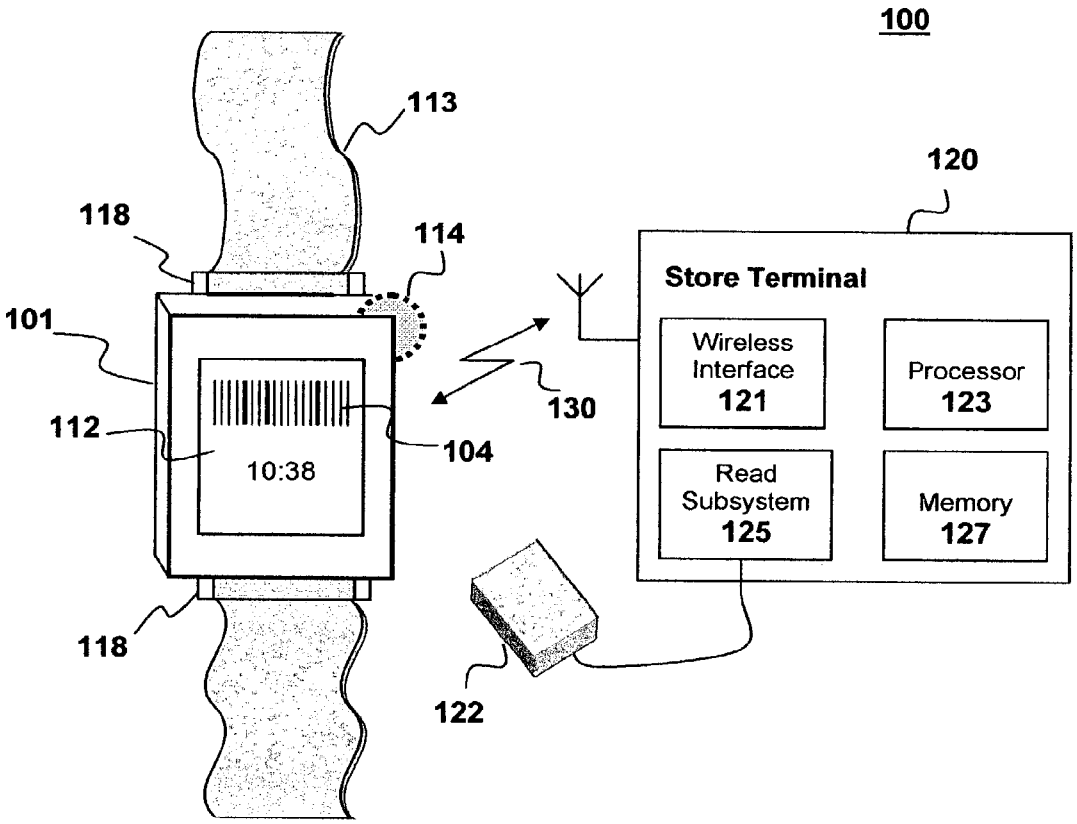

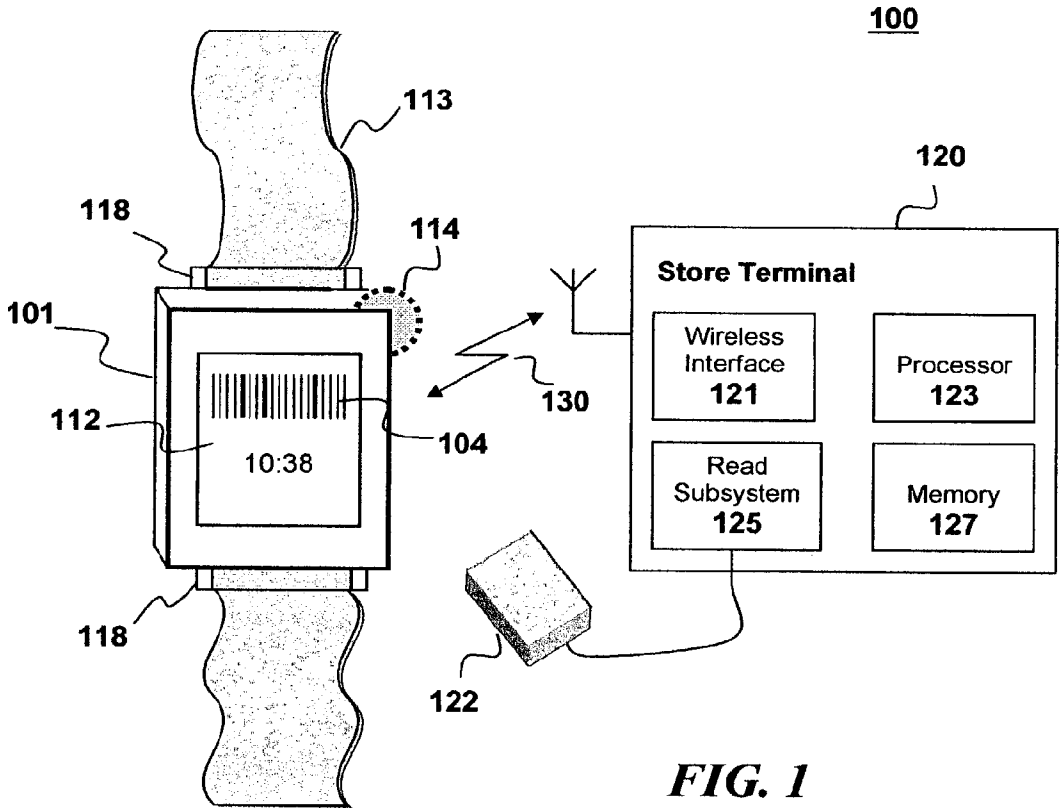
100
113
120
118
114
Store Terminal
101
Wireless Interface 121
Processor 123
130
112
104
10:38
Read Subsystem 125
Memory 127
118
122

FIG. 1

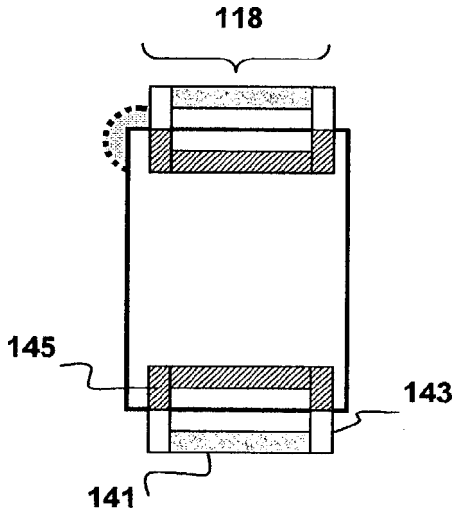
118
145
143
141

FIG. 1A

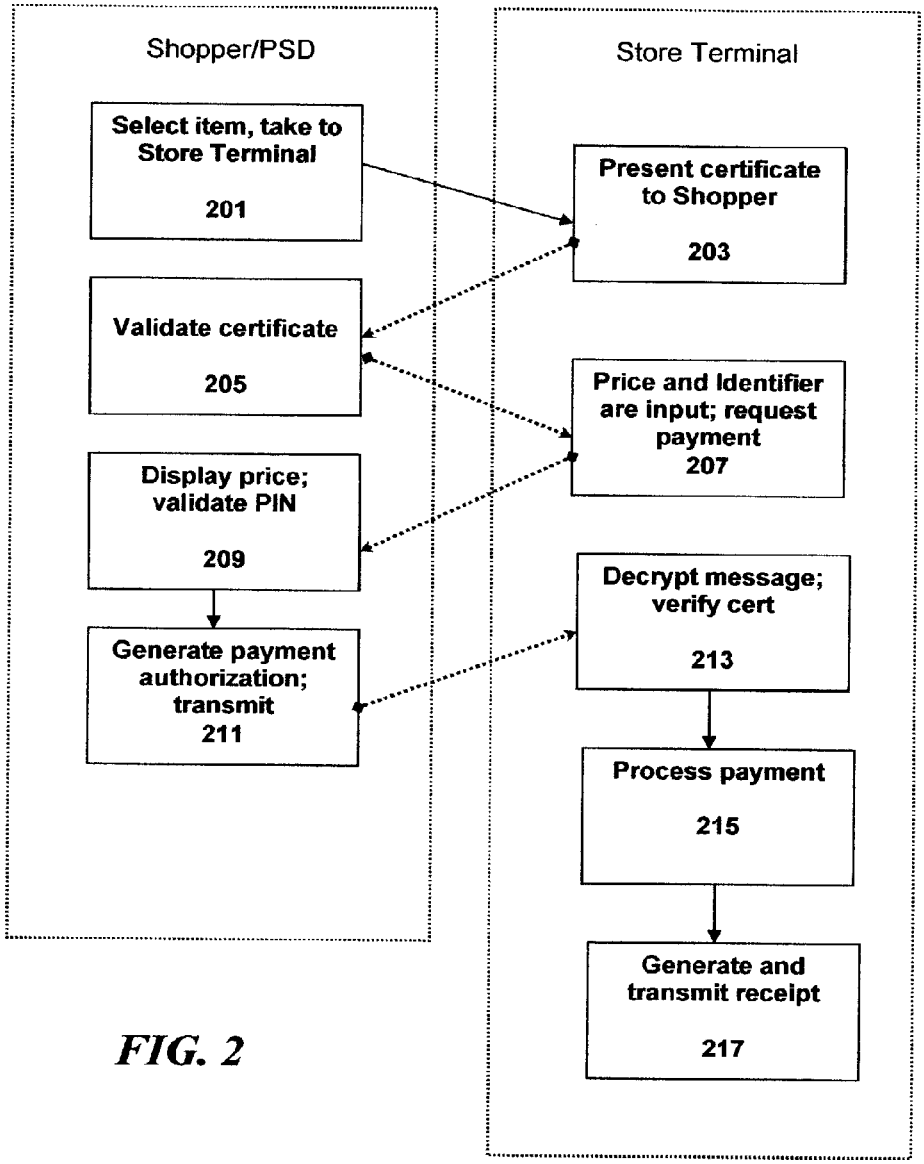
Shopper/PSD
Store Terminal
Select item, take to Store Terminal
201
Present certificate to Shopper
203
Validate certificate
205
Price and Identifier are input; request payment
207
Display price; validate PIN
209
Decrypt message; verify cert
213
Generate payment authorization; transmit
211
Process payment
215
Generate and transmit receipt
217

FIG. 2

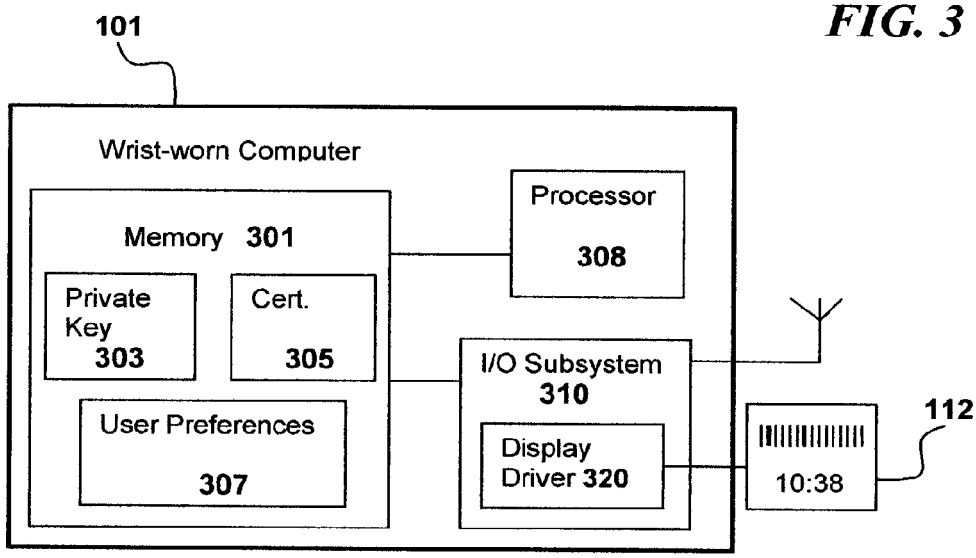
101
Wrist-worn Computer
Memory 301
Private Key 303
Cert. 305
User Preferences 307
Processor 308
I/O Subsystem 310
Display Driver 320
10:38
112

FIG. 3

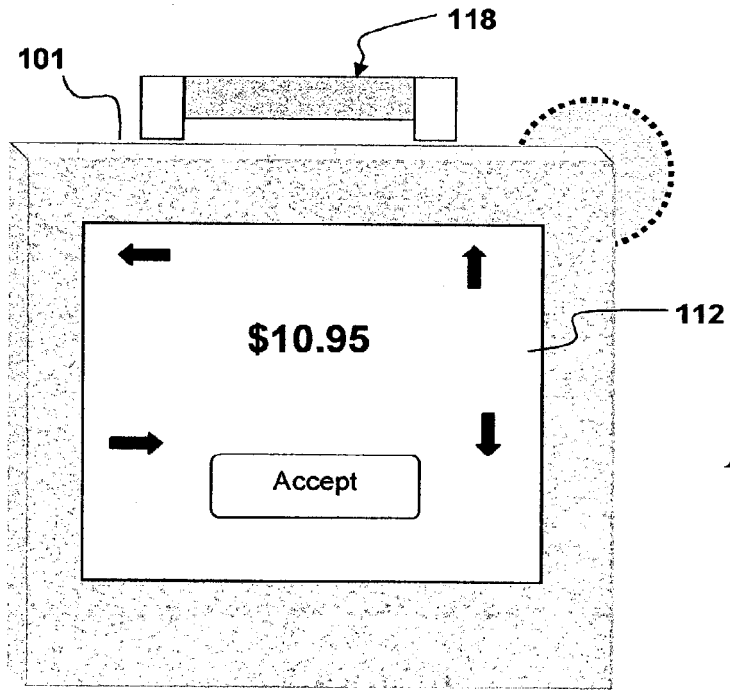
118
101
$10.95
112
Accept

FIG. 4

FIG. 5

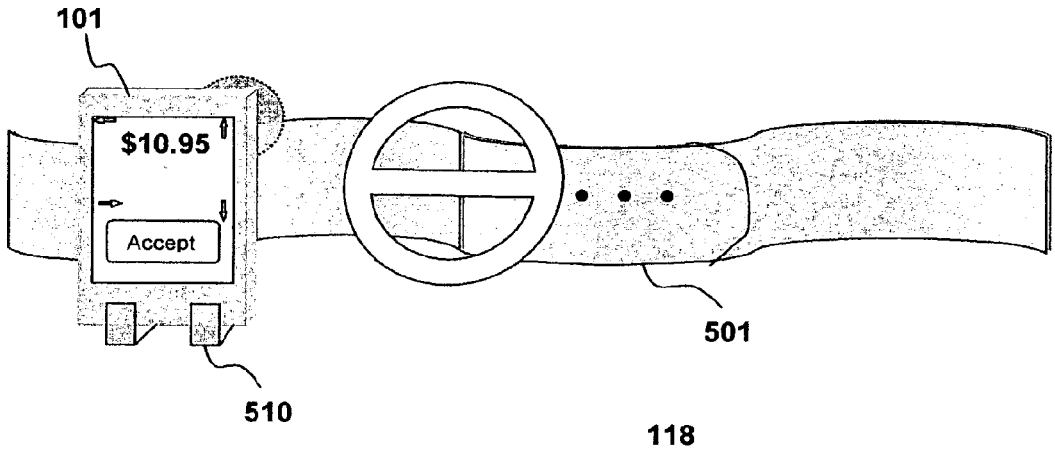

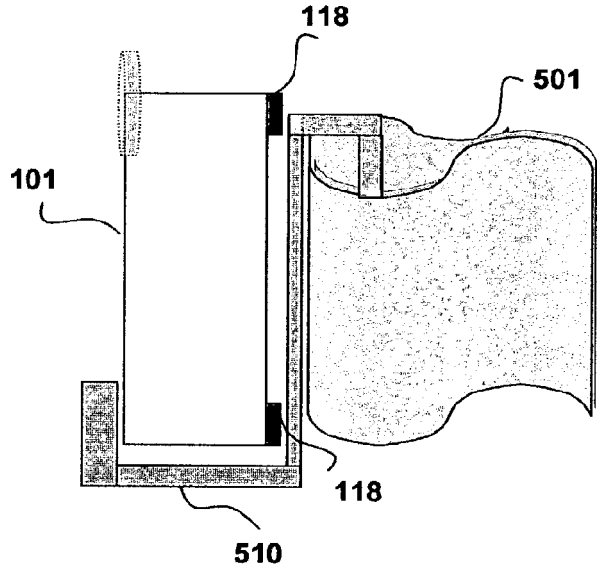

FIG. 6

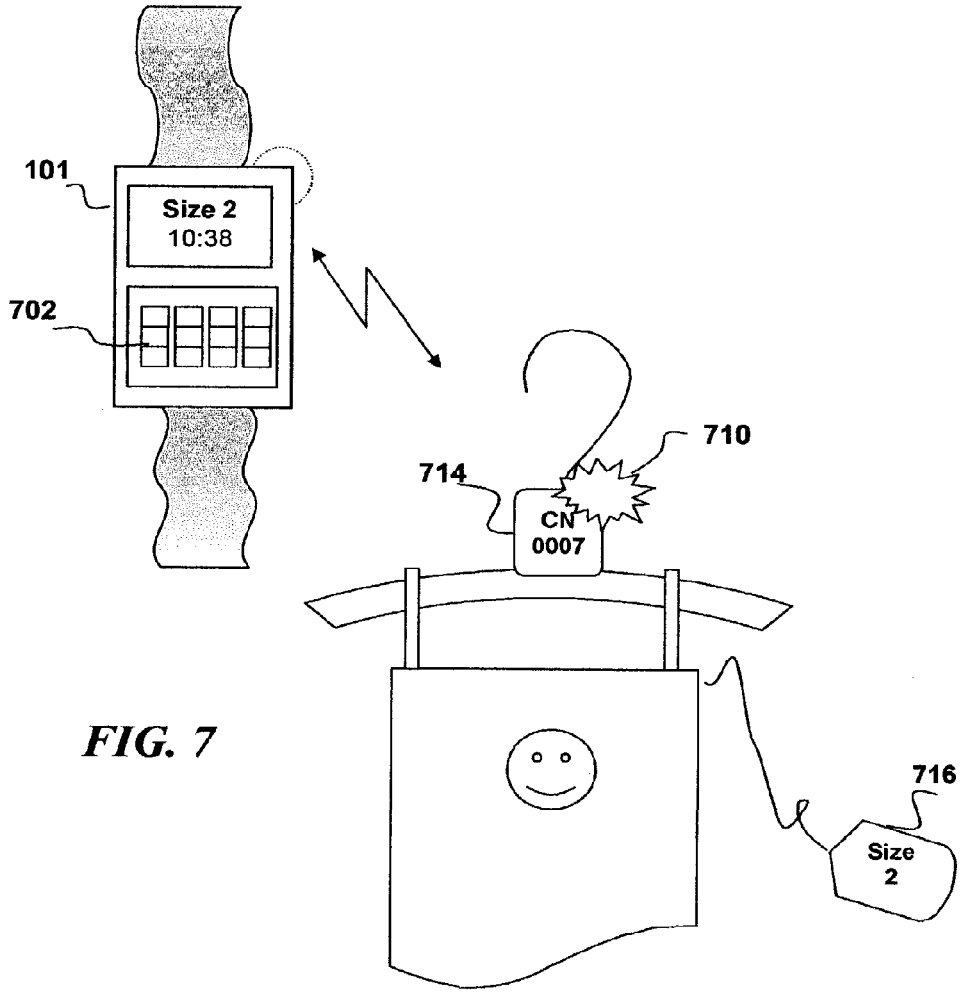

FIG. 7

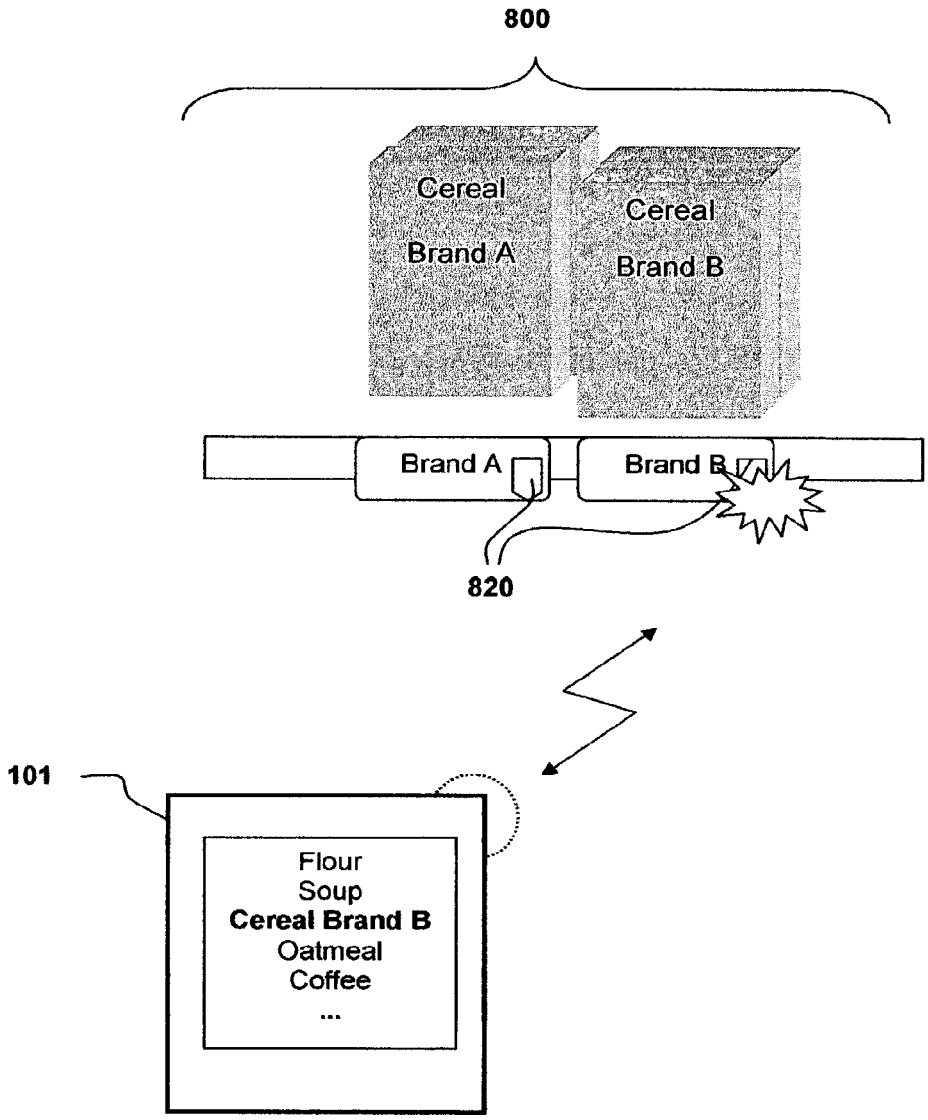
800
Cereal
Brand A
Cereal
Brand B
Brand A
Brand B
820
101
Flour
Soup
Cereal Brand B
Oatmeal
Coffee
...

FIG. 8

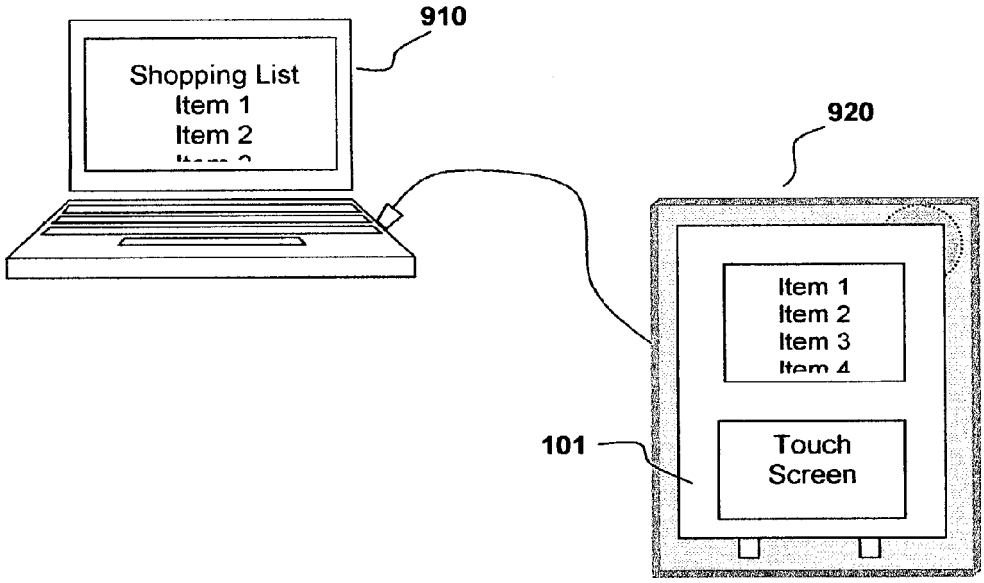
910
Shopping List
Item 1
Item 2
920
Item 1
Item 2
Item 3
101
Touch
Screen

FIG. 9

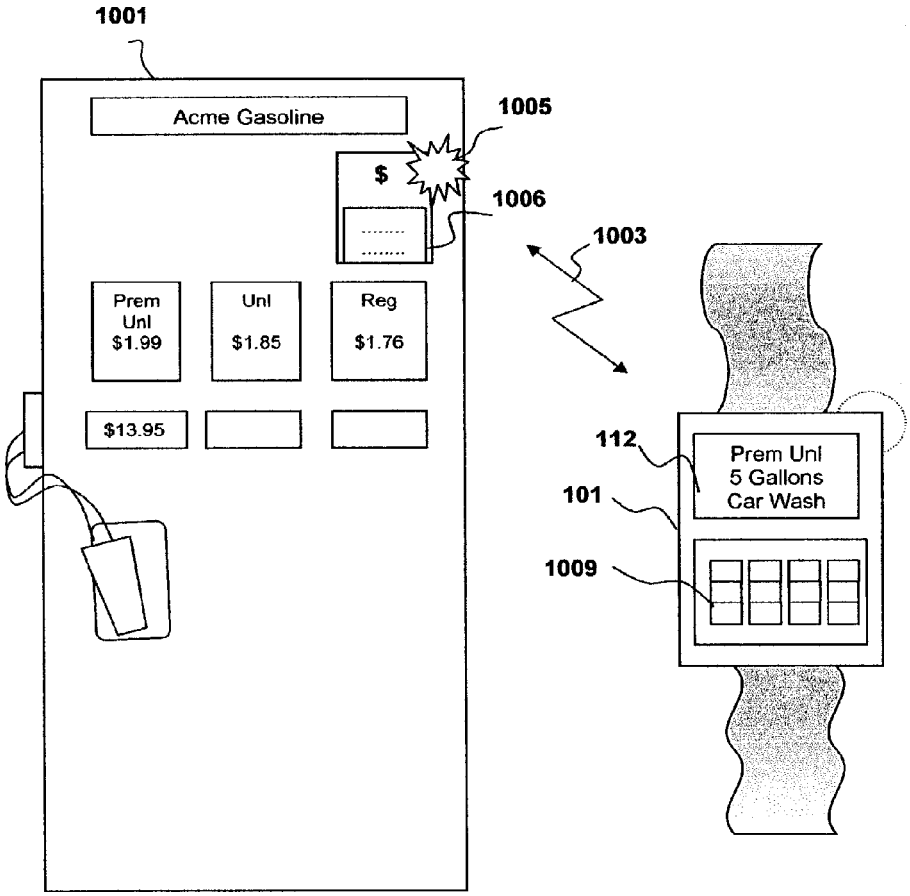
1001
Acme Gasoline
1005
$
1006
1003
Prem Unl $1.99
Unl $1.85
Reg $1.76
$13.95
112
Prem Unl
5 Gallons
Car Wash
101
1009

FIG. 10

PORTABLE INTELLIGENT SHOPPING DEVICE

CROSS-REFERENCE TO RELATED APPLICATIONS

[0001] This application is a division of U.S. application Ser. No. 10/429,372, filed on May 5, 2003, incorporated by reference herein.

FEDERALLY SPONSORED RESEARCH OR DEVELOPMENT

[0002] Not Applicable

INCORPORATION BY REFERENCE OF MATERIAL SUBMITTED ON A COMPACT DISC

[0003] Not Applicable.

FIELD OF THE INVENTION

[0004] The invention disclosed broadly relates to the field of computer systems, and more particularly relates to the field of wearable personal computing devices.

BACKGROUND OF THE INVENTION

[0005] In today's busy world, shoppers look to technology for ways to make the shopping experience easier, faster and more secure. Stores look to technology to lower the high cost of sales transactions which is directly attributable to the increasingly high cost of hiring and paying employees. Therefore, there is a need for greater automation of the purchase and sales transaction process. Credit cards and debit cards are now the methods of payment favored by many shoppers over cash because of the convenience and also because many shoppers are hesitant to carry large amounts of cash. As today's commerce moves toward a paper-less transactional paradigm, the traditional shopping list hand-written on a sheet of paper has evolved into a list digitally stored in a handheld computer. These conveniences have improved the shopping experience to a certain level, but many inconveniences remain in the shopping experience. Since most of the buying public cannot afford a personal shopper there are still many drawbacks inherent in the shopping experience which need to be addressed.

[0006] One such drawback is the necessity of carrying and handling methods of payment, such as credit cards. Consider a shopper on a shopping excursion during a busy holiday weekend and assume that this shopper intends to pay for purchases with department store credit cards. Every purchase made by the shopper involves removing the credit card from a wallet after first removing the wallet from a purse or trouser pocket. Then, after the transaction is finalized with the credit card, requiring the shopper's signature, the shopper needs to replace the card back in the wallet. Consider a shopper performing this ritual several times over the course of a shopping expedition, each time loaded down with more and more bags of purchases. The potential for misplacing the credit cards or the purchases increases with each transaction. In addition, this same shopper has to be constantly vigilant that no one will steal the purchases, the credit cards, or even the shopper's wallet or purse.

[0007] Credit card purchases also generate paper in the form of receipts. The shopper has to properly store the receipts, which are easy to misplace. Many shoppers do not want to carry receipts because of the fear that someone could appropriate the receipt and copy a signature or credit card number from the receipt. This is why many gasoline station payment systems do not print a receipt unless the customer asks for one.

[0008] Finding the desired items in a crowded store can be a considerable chore. Assume that the shopper is looking for clothing items and assume also that this shopper is constrained by a budget, as are most shoppers. The shopper needs to first find the desired apparel in the correct size and then check the price of the item. This is not easily accomplished in a crowded store where a shopper needs to check tags on items hanging very close together on racks. Sometimes a shopper has to remove dozens of items from clothing racks in order to find and read the size and price tags in search of the desired garment.

[0009] The increasing popularity of purchasing items online has created a need for security measures. One of these is public key encryption. This technology makes it possible for persons purchasing items from an internet site to provide their credit information in a secure manner by using encryption. The technology also provides means for the store to make sure that authorizations for payment are received from the person who purports to send it. There also exists technology for determining whether anyone has tampered with a digital payment authorization message.

[0010] There is therefore a need for a device which can overcome the preceding drawbacks and shortcomings in the prior art while preserving secure purchase communications.

DEFINITION OF TERMS

[0011] Some key terms are defined here. The definitions listed here are from the *Computer Desktop Encyclopedia,* Copyright© 1981-2001, The Computer Language Company, Inc.

[0012] Barcode—The printed code used for recognition by a bar code scanner (reader). Traditional one-dimensional bar codes use the bar's width to encode just a product or account number. Two-dimensional bar codes, such as PDF417, MaxiCode and DataMatrix, are scanned horizontally and vertically and hold considerably more data. PDF417 is widely used for general purposes. MaxiCode is used for high-speed sortation, and DataMatrix is used for marking small parts.

[0013] Bar code scanner—A device specialized for reading bar codes and converting them into either the ASCII or EBCDIC digital character code. In order to be read, the tip of the pen must physically touch the bar code. Later, laser scanners allowed the bar code to be read at a slight distance from the head of the device, enabling supermarkets to read round cans and flexible packages more easily. The most common of that type today is the visible laser diode (VLD) scanner, which emits as many as 50 laser beams simultaneously to capture the image at any angle.

[0014] Certificate—a certificate contains the public key for the person or entity to which the certificate is issued. The certificate is signed by a trusted party such as VeriSign. The signature helps in making a trusted association between the entity and the public key.

[0015] Digital Signature—A digital signature, or e-signature, is a sequence of bytes that is appended to an electronic document that can be used to verify the identity of the person signing the document, and also that the document has not been modified since it was signed.

[0016] Liquid Crystal Display (LCD)—A display technology that uses rod-shaped molecules (liquid crystals) that flow like liquid and bend light. Un-energized, the crystals direct light through two polarizing filters, allowing a natural background color to show. When energized, they redirect the light to be absorbed in one of the polarizers, causing the dark appearance of crossed polarizers to show. The more the molecules are twisted, the better the contrast and viewing angle. Because it takes less power to move molecules than to energize a light-emitting device, LCDs replaced LEDs in digital watches years ago.

[0017] LED—(Light Emitting Diode) A display technology that uses a semiconductor diode that emits light when charged. It usually gives off a red glow, although other colors can be generated. It is used in readouts and on/off lights in a myriad of electronic appliances. It was the first digital watch display, but was superseded by LCD, which uses less power. LEDs are also used as a light source for fiber-optic transmission. They are typically used with lower-bandwidth multimode fibers.

[0018] PDF417 (Portable Data File417). A two-dimensional bar code that was created in the late 1980s, the standard was later placed in the public domain and is governed by the Automatic Identification Manufacturers (AIM) trade association. The PDF417 can hold up to 1,800 bytes of any digital data in a printed area about the size of a business card.

[0019] Point of sale terminals: Capturing data at the time and place of sale. Point of sale systems use personal computers or specialized terminals that are combined with cash registers, bar code readers, optical scanners and magnetic stripe readers for accurately and instantly capturing the transaction. Point of sale systems may be online to a central computer for credit checking and inventory updating, or they may be stand-alone machines that store the daily transactions until they can be delivered or transmitted to the main computer for processing.

[0020] Private key is defined as: The private part of a two-part, public key cryptography system. The private key is kept secret and never transmitted over a network.

[0021] Public key is defined as: The published part of a two-part, public key cryptography system. The private part is known only to the owner.

[0022] Public key cryptography: A cryptographic method that uses a two-part key (code) that is made up of public and private components. To encrypt messages, the published public keys of the recipients are used. To decrypt the messages, the recipients use their unpublished private keys known only to them.

[0023] SKU—(StockKeeping Unit) The number of one specific product available for sale.

SUMMARY OF THE INVENTION

[0024] Briefly, according to the claimed invention, a mobile information processing device includes a display driver for displaying a bar code including a representation of a user's acceptance of a price requested by a store for a selected item of purchase.

BRIEF DESCRIPTION OF THE DRAWINGS

[0025] FIG. **1** is an illustration of a sales transaction system according to an embodiment of the invention.

[0026] FIG. **1**A is a view of the back of a portable intelligent shopping device, according to an embodiment of the invention.

[0027] FIG. **2** is a data flow diagram of a purchase and sale transaction, according to an embodiment of the invention.

[0028] FIG. **3** is a block diagram of a portable intelligent shopping device, according to an embodiment of the invention.

[0029] FIG. **4** is an illustration of the top view of a portable intelligent shopping device displaying a price, according to an embodiment of the invention.

[0030] FIG. **5** is an illustration of the portable intelligent shopping device worn on a belt, according to an embodiment of the invention.

[0031] FIG. **6** is an illustration of a side view of the portable intelligent shopping device worn on a belt, according to an embodiment of the invention.

[0032] FIG. **7** is an illustration of the size selection feature of the portable shopping device, according to an embodiment of the invention.

[0033] FIG. **8** is an illustration of the grocery shopping list feature of the portable shopping device, according to an embodiment of the invention.

[0034] FIG. **9** is an illustration of a system wherein an embodiment of the invention can be advantageously used.

[0035] FIG. **10** is an illustration of the portable shopping device used for the purchase of gasoline at a gas station, according to an embodiment of the invention.

DESCRIPTION OF THE PREFERRED EMBODIMENTS

[0036] According to a preferred embodiment, a small, lightweight, wearable intelligent device of varying form factors assists shoppers in selecting and purchasing desired items. This assistance is in the form of a secure and automated performance of paper-less purchase and sale transactions.

[0037] Referring to FIG. **1**, an automatic and secure purchase and sale transaction system **100** according to an embodiment of the invention comprises a Portable Shopping Device **101** and a Store Terminal **120** that communicate with each other to perform a paper-less transaction.

[0038] The Portable Shopping Device (PSD) **101** is an information processing system that is preferably a small lightweight device suitable to be worn on a shopper's wrist or carried in a shirt pocket or attached to a belt or lanyard. In the example shown in FIG. **1**, the PSD **101** uses a wrist watch form factor for convenient mobility. It preferably comprises a high definition display **112**, preferably with a touch-sensitive screen, and a scrolling wheel input device

114, as described in commonly-owned U.S. Pat. No. 6,525,997 B1 "EFFICIENT USE OF DISPLAY REAL-ESTATE IN A WRIST WATCH DISPLAY" and "Application Design for a Smart Watch with a High Resolution Display" by Chandra Narayanaswami and M. T. Raghunath, both of which are incorporated by reference as if fully set forth herein. The display screen **112** is shown displaying the time and a bar code **104**. The bar code **104** represents purchase item information according to one embodiment of the invention. On the top and bottom of the watch casing are shown retractable bars **118** through which a watch strap **113** is threaded.

[**0039**] The second component of the sales transaction system **100** is the Store Terminal **120** which is a point of sale terminal, similar to those found in any major department store but adapted to operate according to embodiments of the invention. The Store Terminal **120** in this embodiment comprises a wireless interface **121**, a processor **123**, a read subsystem **125** and memory **127**. Connected to the read subsystem **125** is a bar code reader **122** (also known as a bar code scanner) for reading the bar code **104** on the PSD **101**. The double-headed arrow **130** represents signals, such as short-range Radio Frequency (RF) or Infra-Red (IR) signals, for transmitting data to enable a wireless purchase transaction.

[**0040**] The compact size and lightness of the PSD **101** make it ideal to be worn as a wristwatch. Other form factors are also contemplated within the spirit of the invention, such as a belt accessory, but for purposes of this example we will focus our discussion on the wristwatch form factor.

[**0041**] FIG. **2** illustrates the operation of the sales transaction system **100** with respect to a purchase and sale transaction in a department store. The actions performed by the PSD **101** are shown on the left and the actions performed by the Store Terminal **120** are shown on the right. The sales transaction system **100** operates as follows. In step **201** a user, wearing the PSD **101**, selects an item for purchase and brings the item to the Store Terminal **120**. A method according to an embodiment of the invention for selecting an item for purchase is discussed below with reference to FIG. **7**. The PSD **101** will communicate to the Store Terminal **120**, preferably via wireless transmission, that it requires the store's certificate in order to commence a transaction.

[**0042**] In step **203**, the Store Terminal **120**, in response to a transmission from the PSD **101**, presents the store's certificate to the user. For purposes of the discussions to follow we will refer to the user of the PSD **101** as a shopper. This transmission from the Store Terminal **120** can also be done via an encrypted wireless transmission protocol. In step **205** the PSD **101** checks the certificate to verify that it originated from a valid Store Terminal **120**. The certificate is issued by a trusted third party service organization, such as VeriSign. The PSD **101** uses VeriSign's public key to verify VeriSign's signature on the certificate.

[**0043**] The PSD **101** may already have the store's public key stored in its memory **127** or may receive it at this time. The Store Terminal **120** may have already sent the store's public key to the PSD **101** in step **203**.

[**0044**] In step **207**, the price of the item for purchase and its identifying information, such as the SKU, are input to the Store Terminal **120** through conventional means, perhaps by a sales clerk scanning the price tag. The Store Terminal **120**, after receiving the item identifier and amount, transmits a request for payment authorization of the selected item by providing a signal to the PSD **101** preferably via an appropriate communication medium, such as IR or RF transmission. The signal comprises a price for the item and an identification of the item by known means such as a displayed written description. This request for payment is preferably encrypted by the Store Terminal **120** with the store's private key and the shopper's public key. This encryption is essential to assure the shopper that the request for payment, which will include a request for form of payment, such as a credit card number, originates from the Store Terminal **120** and not someone trying to steal a credit card number.

[**0045**] Next, in step **209**, the PSD **101** presents the received information to the shopper, in response to receiving the request for payment authorization from the Store Terminal **120**. Since this message requesting payment from the Store Terminal **120** is encrypted, the PSD **101** will decrypt the message using the shopper's private key and the enclosed certificate is decrypted with the store's public key. This message, which contains the price of the item, can be presented to the shopper in the form of a text message on the display **112** or perhaps in the form of an audio message.

[**0046**] At this time, the shopper can also be prompted to enter his or her personal identification code (e.g., a number or PIN) in order to validate the request for payment. This is a security feature to prevent someone who has stolen the PSD **101** from using it to make unauthorized purchases.

[**0047**] The PSD **101** will confirm the PIN entered, and if it is valid, in step **211** the PSD **101** generates a message authorizing payment, including an account number or credit/debit card number, for the selected item, which needs to be encrypted for security purposes. The PSD **101** then appends an e-signature to the message that includes an amount and the card or account number. The message also preferably includes an interjacence counter-measure, such as a hash function performed on the message to generate a message digest. The signed payment authorization is encrypted using a suitable encryption scheme to protect the communication from eavesdroppers. Such an encryption scheme can be implemented by programming the PSD **101** with an algorithm stored in memory **127** for execution by the processor **123**, or by an application-specific integrated circuit comprising the appropriate algorithms.

[**0048**] In step **213** the Store Terminal verifies the shopper's e-signature in the payment authorization and accepts the e-signature in lieu of a paper signature. Since the message included a form of payment, such as a credit card number, the next step **215** involves the Store Terminal **120** processing the purchase using conventional means, such as contacting the credit card agency and transmitting the purchase price to be credited to the shopper's credit card.

[**0049**] If the store does not have a device that can communicate with the PSD **101** using IR or RF signals the method works as follows. The store clerk orally tells the shopper the amount due. The shopper enters the payment amount into the watch along with his/her PIN. Once this is done, the PSD **101** creates a payment authorization message that includes the payment authorization amount and credit card or store account information. The PSD **101** then signs

the message as discussed above. It then encodes a payment message and shopper's certificate, preferably as a 2-dimensional bar code **104** for display on the PSD **101** display screen **112**. The store can scan the bar code **104** clearly displayed on the display screen **112** of the PSD **101** with a bar code reader **122** and verify it as above. Since the device has a very high resolution display, for example 600 dots per inch (600 dpi), it can be used to convey a large amount of information on a screen using a 2D barcode. The amount of information which can be stored on a 2D barcode is more than a hundred bytes.

[**0050**] If the store does not have a 2D bar code reader, the watch can be used to send the same message using a sequence of one-dimensional (1D) bar codes. Most stores have 1D barcode readers which can be easily retrofitted to read a bar code displayed on a shopper's PSD **101**.

[**0051**] In step **217** a receipt for the purchase and sale transaction is generated by the Store Terminal **120**. This receipt can be generated through conventional means, such as a paper receipt, or, as an optional alternative to a paper receipt, the Store Terminal **120** could generate an electronic receipt. This electronic receipt could be encrypted by the store with the shopper's public key and transmitted to the PSD **101**. The PSD **101** would then decrypt it with its private key and store it. This is an optional alternative to receiving a paper receipt.

[**0052**] The display **112** has several modes, which can be selected by using the roller wheel **114** or other input device, such as the touch screen, as more fully described in commonly-owned U.S. Pat. No. 6,525,997 B1 "EFFICIENT USE OF DISPLAY REAL ESTATE IN A WRIST WATCH DISPLAY" and also in the publication "Application Design for a Smart Watch with a High Resolution Display" by Chandra Narayanaswami and M. T. Raghunath. In bar code mode, the display **112** shows the bar code of the selected/purchased item, and optionally displays the current time. When in bar code mode, the shopper presents the PSD **101** display screen **112** to a sales clerk in order for the sales clerk to scan the bar code **104** using a bar code reader **122**. Optionally, the information can be scanned by the shopper.

[**0053**] In price mode, the display **112** shows the price of the selected item, but in place of the current time, the user sees an accept/reject icon. A user of the PSD **101** can accept a price by any of several ways such as tapping or clicking on an accept command displayed on the screen **112**.

[**0054**] In the above-discussed example the shopper uses credit card information to authorize payment but it should be understood that other means of payment authorization can also be used. For example, the shopper could use digital tokens that are analogous to physical tokens that can be purchased for later payment for items of interest.

[**0055**] Referring to FIG. **3** we show a block diagram of the portable shopping device **101** showing a highly simplified version of the key internal components. The memory block **301** stores a private key **303**, a certificate **305** and user preferences **307**. The memory **301** is connected to a system processor **308** and an Input/Output subsystem **310**. The I/O subsystem, containing a display driver **320**, is in turn connected to the user interface which is the display **112** and to an antenna for transmission of signals to store terminals. The display **112** is shown displaying a bar code and the time. The memory **301** can be a semiconductor memory such as a flash EPROM (erasable, programmable, read-only memory), a small hard disk drive, or any other suitable information storage device. The logic performed according to the invention can be realized with either an application-specific integrated circuit (ASIC) or a general-purpose processor and instructions embedded in Read Only Memory (ROM) or other storage for performance by the processor.

[**0056**] FIG. **4** shows a close-up top view of the PSD **101** with the display in "price" mode. The display **112** shows the price of the item selected for purchase. At the bottom of the display window there is a button **401** for accepting or declining the purchase. The arrow icons around the display screen represent directions for scrolling the content displayed on the screen and for toggling back and forth among display modes, such as price mode (displaying an item price) and bar code mode (displaying purchase item information for scanning). It should be understood that other icons can also be used to represent functions and functions other than scrolling and toggling are possible within the spirit and scope of the invention, as described in "Application Design for a Smart Watch with a High Resolution Display" by Chandra Narayanaswami and M. T. Raghunath.

[**0057**] FIG. **5** shows another embodiment wherein the PSD **101** is attached by a belt clip **510** and worn on a belt **501**. This embodiment is more convenient for PSD **101** models that are bigger or heavier than may be comfortably worn on a wrist.

[**0058**] FIG. **6** is a side view of the PSD **101** disposed in the belt clip **510**. As can be seen from this illustration, the PSD **101** can be easily removed from the belt clip **510** and carried by hand or in an alternative embodiment, it can be attached to a lanyard or key ring. A wrist-worn PSD **101** can be modified to be worn on a belt by retracting the watch strap bars **118** into grooves on the back casing. The grooves are represented by the cross-hatched boxes.

[**0059**] Referring to FIG. **7**, there is shown a PSD **101** with additional optional features of memory and logic for storing a shopper's size, color and/or price preferences. The PSD **101** can be configured to transmit a shopper's preferences by means of a short-range transmitter so that when a shopper wearing the PSD **101** approaches a rack of clothing all of the clothes that match the shopper's preferences light up responsive to receiving the transmission comprising the preferences. The short range transmissions can be accomplished by transmission of a periodic low power radio (or other medium) signal comprising the shopper's preferences. Once a store wireless terminal receives the signals, it identifies the matching items and causes a location indicator such as a light **710** or sound to alert the shopper of the sought item's location.

[**0060**] For example, in one embodiment of the invention a shopper would key in his/her size preference into the PSD **101** using a keypad **702**. Assume that the shopper wishes to select clothing that is size 2. The shopper would key this information into the keypad **702**. In the store, the clothes hangers on the clothes rack are equipped with small Light Emitting Diodes (LEDs) **710** located on the upper portion of the hanger where it would not be obscured by the attached garment. The PSD **101** transmits the shopper's size preference to the clothes rack by means of a periodic or constant radio signal comprising the shopper's size preferences. The

signal is preferably a short-range signal so that the transmission strength of the signal is strong enough to be received by the clothes rack only when the shopper is near enough to the clothes rack to be able to see it. Alternatively, the signal could be received directly by the LEDs attached to the clothes hangers. The LEDs attached to the hangers that match that size light up with a blinking light, preferably a red blinking light. Only the hangers displaying size 2 clothing would light up, therefore the shopper would know at a glance which clothing items to inspect. The shopper would not have to pick up each item and search for a size tag. In an alternative embodiment, the LEDs could be attached to the clothing items or a tag **716** hanging from the clothing items.

[**0061**] In another embodiment the LED could light up with a display **714** of a shopper's name, nickname, or code word in order to distinguish a particular shopper's desired item from that of a nearby shopper concurrently transmitting a size selection for a different size.

[**0062**] This principle is extensible to other concepts. Assume a grocery shopper keys in or downloads a grocery shopping list to the PSD **101**. When in an aisle in a grocery store, tags light up near the items that a shopper wearing a PSD **101** has identified in his shopping list in the PSD **101**. User preferences, such as the grocery shopping list, can be entered into the PSD **101** by connecting it to a docking station or connector attached to a personal computer. Only the items in the grocery list which are located in close proximity to the shopper wearing the PSD **101** would light up.

[**0063**] The range of distance between the PSD **101** and the item which lights up has to be pre-selected by the individual store and this selection will most probably be based on the type and size of the store. For example, in a large supermarket where a shopper can easily see most items along an entire aisle of the supermarket, the range can be set to encompass the length and breadth of the grocery aisle. In a small, crowded boutique or a small department within a department store where a shopper has a limited range of vision, the range can be set to a circle with a diameter not to exceed six feet. When the shopper is within range, the items selected by the PSD **101** will light up and then when the shopper moves out of range, the lit items turn off.

[**0064**] FIG. **8** shows a PSD **101** in wristwatch form factor and a sample representation of a cereal aisle **800** in a grocery store. As shown in FIG. **8**, electronic tags **820** placed near the desired items from the shopper's list will light up, perhaps with a flashing light, when the shopper is near enough to the desired items (in this case, a desired cereal brand) to be alerted by the lights. The shopping list could be downloaded from the shopper's computer or personal digital assistant (PDA).

[**0065**] In addition to sending a signal to flag the desired items, the PSD **101** could also download an electronic route map of the grocery store and then, using this route map, rearrange the shopping list items so that they track the aisles in the grocery store, according to the route map. For example, assuming a shopper begins grocery shopping in aisle **1** and then proceeds through the store until the last aisle, the shopping list would be rearranged so that all of the aisle **1** items are listed first, then the aisle **2** items, etc. The items would light up when the PSD **101** is in close proximity to them, aisle by aisle. The list could be recomputed dynamically if the shopper sees something not on the list and decides to go get it, thereby deviating from the set route. For example, if a shopper is in aisle **3** and instead of proceeding to aisle **4** goes directly to the produce section in the back of the store near aisle **7**, the PSD **101** will rearrange, or sort, the items on the grocery list to originate with the items closest to the produce section.

[**0066**] Optionally, a shopper could delete or tag items on the grocery list as they are picked, similar to a shopper drawing a line through items on a paper list. This can be done by tapping on the touch screen where the item name appears, perhaps with a stylus, or by using the rotating wheel **114** as a scroller to highlight an item for deletion and then depressing the wheel **114** to select the item. Highlighting and selecting items on a wrist watch display are known to those skilled in the art and are discussed in U.S. Pat. No. 6,525,997 B1 "EFFICIENT USE OF DISPLAY REAL-ESTATE IN A WRIST WATCH DISPLAY" and "Application Design for a Smart Watch with a High Resolution Display" by Chandra Narayanaswami and M. T. Raghunath.

[**0067**] An additional feature would be to provide an option for ordering of the shopping list other than by the location of items, such as sorting a list beginning with non-perishable foods and ending with frozen foods. Many grocery shoppers, especially those buying a large load of groceries, prefer to get the frozen foods (designated as the most perishable) last.

[**0068**] In another embodiment and use of the PSD **101**, mall stores broadcast their specials and the device can receive these broadcasts and alert the shopper when a desired item is on sale nearby. The shopper has no need to transmit information about what items and/or sizes the shopper desires. There is no necessity for transmits from the shopper's PSD **101**. In this embodiment, the device stores an identification of at least one desired item and the mall stores broadcast their specials. If one of the broadcasted specials matches an item in the shopper's list within the PSD **101**, the device alerts the shopper. The alert could be in the form of an alarm or a flashing light on the display **112** of the PSD **101**. Watch alarms and flashing light displays are both known and used in wrist watch technology today.

[**0069**] In a shopping mall, the PSD **101** can also keep track of the best broadcasted price for an item and act as a best-price finder for a particular item. Assume the shopper is traversing a typical large suburban mall where many of the stores stock the same items. The shopper introduces the item of interest into the PSD **101** and walks through the mall. The stores are broadcasting items with their respective prices (similar to the broadcast technology used in cellular telephone communication). The PSD **101** will only store the broadcast which matches the desired item input by the shopper. Assume many of the stores in this mall are broadcasting the same item, but with different prices. The PSD **101** will store all of these broadcasts and automatically sort the list in order from lowest to highest price. A quick glance at the list informs the shopper of the best price for the desired item.

[**0070**] In a similar embodiment, a shopper performs reverse auctions using the PSD **101** device. For example, at a mall the PSD **101** sends out an offering bid for an item that the shopper wants to buy. All stores in the mall that are

properly equipped receive the bid and respond with "yes/no/best offer" transmissions. If the shopper does not like any offer made by the merchants he or she can go buy the item elsewhere. On the other hand, if a favorable response is received from one or more merchants, the user can proceed to purchase the item or negotiate further.

[0071] FIG. **9** shows an adapter or docking station **920** for connecting the PSD **101** to a desktop personal computer (PC) **910** for entry and synchronization of data. Thus, the user can use the PC **910** to enter the user preferences such as shopping lists and clothing sizes. Because the PSD **101** preferably maintains a record of sales transactions it has completed, a synchronization process can update the shopping list to eliminate items already purchased, and perhaps update an inventory record or check purchases against a family budget stored in the PC **910**. Alternatively, a portable keyboard can be connected to the PSD **101** to make data entry easier. The adapter **920** shown in FIG. **9** enables the PSD **101** to access a greater amount of storage than it would be able to contain. In addition, the adapter **920** provides a portal to the internet. This interaction with other devices such as PCs and PDAs is a convenient way for small devices with limited storage, such as the PSD **101**, to exponentially increase their utility.

[0072] Referring to FIG. **10** there is shown an illustration of an embodiment according to the invention used for facilitating the purchase of gasoline at a gasoline station. Most gasoline stations have automated payment systems for paying by credit/debit card right at the gasoline kiosk. In this embodiment, the shopper selects a payment method at the kiosk that uses a system according to the invention. The kiosk preferably transmits a short range (e.g., low power) signal to the shopper, comprising the price of the grade of gasoline selected and the shopper confirms the purchase as described above. One variation in the system in this case is that the kiosk transceiver sends the PSD **101** a final confirmation of price based on the amount of gasoline actually pumped.

[0073] In this example, the PSD **101** is configured for transmitting a gasoline purchase preference via a short-range transmitter to the gasoline kiosk **1001**. The diagonal arrow **1003** represents the signal which facilitates the communication between the gasoline kiosk **1001** and the PSD **101**. As is shown in FIG. **10**, the display **112** reflects the shopper's choice of gasoline (Premium Unleaded), number of gallons to purchase (5 gallons) and the additional choice of a car wash purchase. A shopper introduces these preferences, perhaps by using the keypad **1009**, and the PSD **101** transmits a signal **1003** to an electronic receiver **1005** located on the gasoline kiosk **1001**, preferably located either on or within close proximity to the gasoline sales register **1006**. After receiving this purchase request, the gasoline kiosk **1001** requests a confirmation and validation, perhaps by requesting the shopper's PIN. The gasoline purchase and sale transaction is then concluded in a manner as described earlier in the discussion of FIG. **1**.

[0074] The examples and illustrations discussed above are meant to represent some of the ways in which the instant invention can be advantageously used to facilitate purchase and sale transactions in a secure manner. Those skilled in the art will perceive that the examples discussed above are by no means comprehensive, but instead are a representative sampling of the possible embodiments of the instant invention.

[0075] Therefore, while there has been described what are presently considered to be the preferred embodiments, it will be understood by those skilled in the art that other modifications can be made within the spirit and scope of the invention.

1. A mobile information processing device comprising:

a display driver configured for displaying a bar code comprising a representation of a user's acceptance of a price requested by a store for a selected item for purchase.

2. The mobile information processing device of claim 1 wherein the bar code is two-dimensional.

3. The mobile information processing device of claim 1 wherein the bar code is one-dimensional.

4. The mobile information processing device of claim 1 wherein the bar code represents an encrypted payment authorization message that includes an encrypted e-signature.

5. The mobile information processing device of claim 1 further comprising an input for receiving data from a user, the data comprising purchase information including a price of the selected item for purchase and a personal identification number; and logic for converting the purchase information into a bar code.

6. The mobile information processing device of claim 1 comprising a belt clip for wearing on a belt.

7. The mobile information processing device of claim 1 comprising straps for wearing around a wrist.

8. The mobile information processing device of claim 1 comprising a clip for attaching to a lanyard.

9. The mobile information processing device of claim 1 wherein the display driver is further configured for displaying time.

10. The mobile information processing device of claim 3 wherein the display driver is further configured for displaying a sequence of the one-dimensional bar codes.

* * * * *