US 20120067944A1

(19) United States

(12) Patent Application Publication

Ross

(10) Pub. No.: US 2012/0067944 A1

(43) Pub. Date: Mar. 22, 2012

(54) **BARCODE RENDERING DEVICE**

(75) Inventor: **Mark A. Ross**, San Carlos, CA (US)

(73) Assignee: **KALDOORA, INC.**, Redwood City, CA (US)

(21) Appl. No.: **12/888,129**

(22) Filed: **Sep. 22, 2010**

Publication Classification

(51) **Int. Cl.**

G06F 17/00 (2006.01)
G06K 7/12 (2006.01)
H04L 9/00 (2006.01)
G06K 19/06 (2006.01)

(52) **U.S. Cl.** **235/375**; 235/494; 235/470; 713/150

(57) **ABSTRACT**

In one embodiment, a barcode rendering device includes a communication interface, a reflective display, and a detector. The communication interface is configured to receive barcode data corresponding to a barcode in one of a plurality of barcode symbologies. The reflective display is configured to legitimately display barcodes in any of the plurality of barcode symbologies. The detector is configured to detect illumination emitted by a barcode scanner and incident on the reflective display.

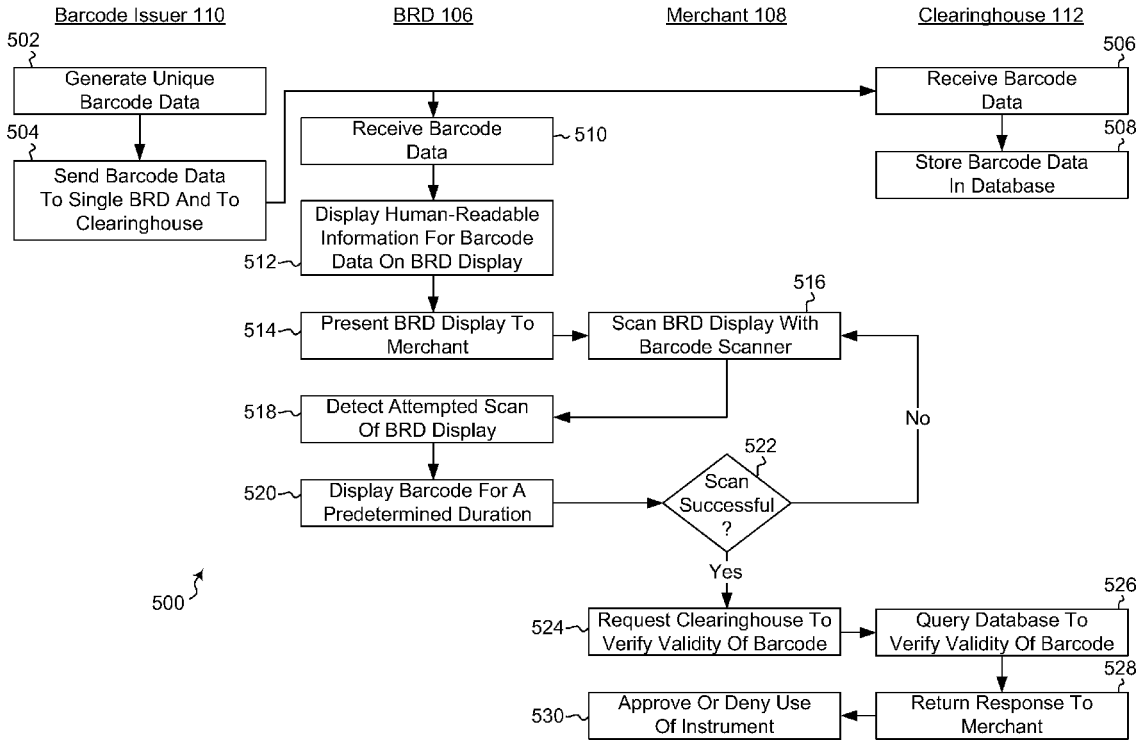

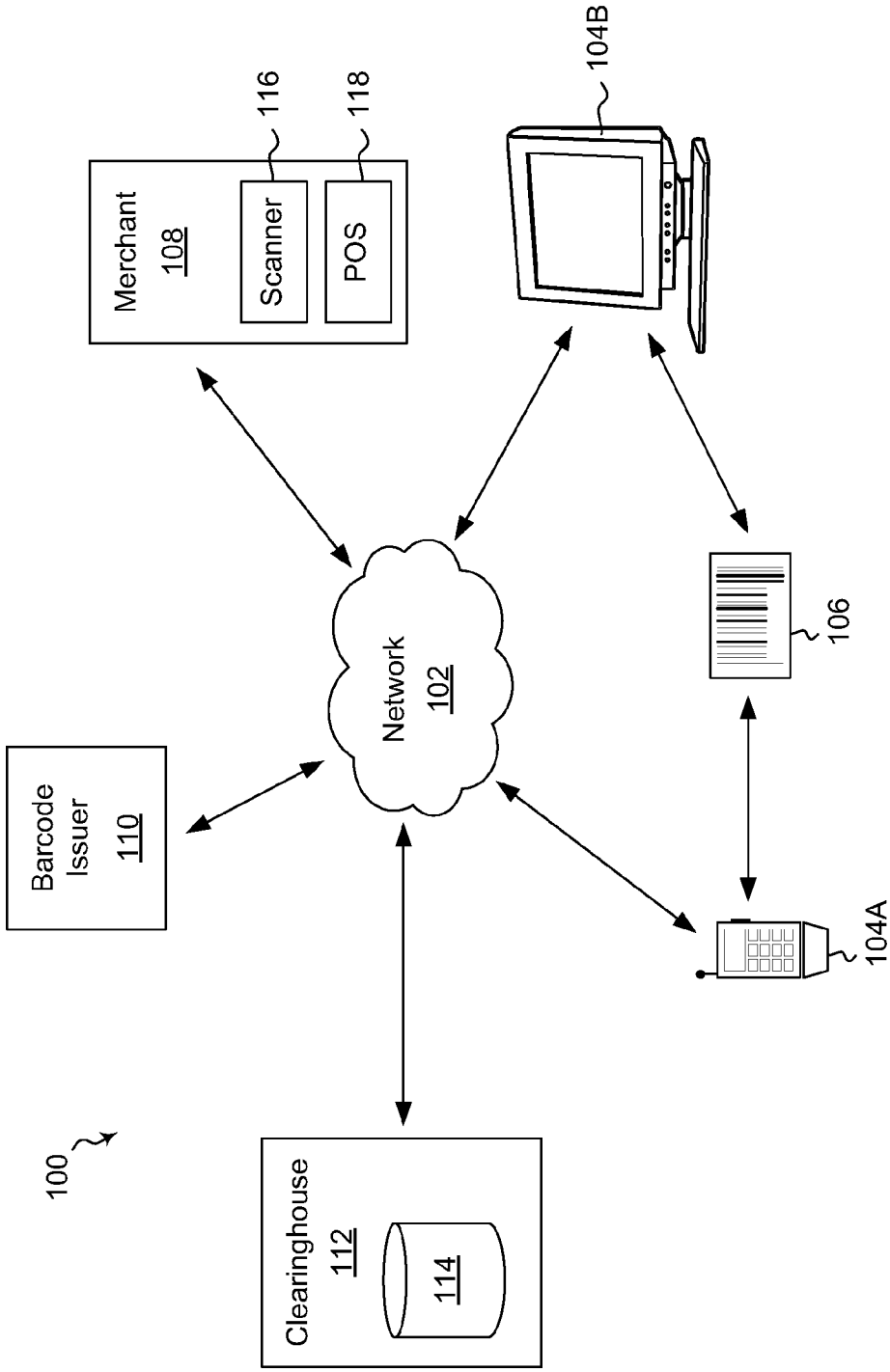
100
Merchant
108
Scanner
116
POS
118
104B
Barcode
Issuer
110
Network
102
106
104A
Clearinghouse
112
114

Figure 1

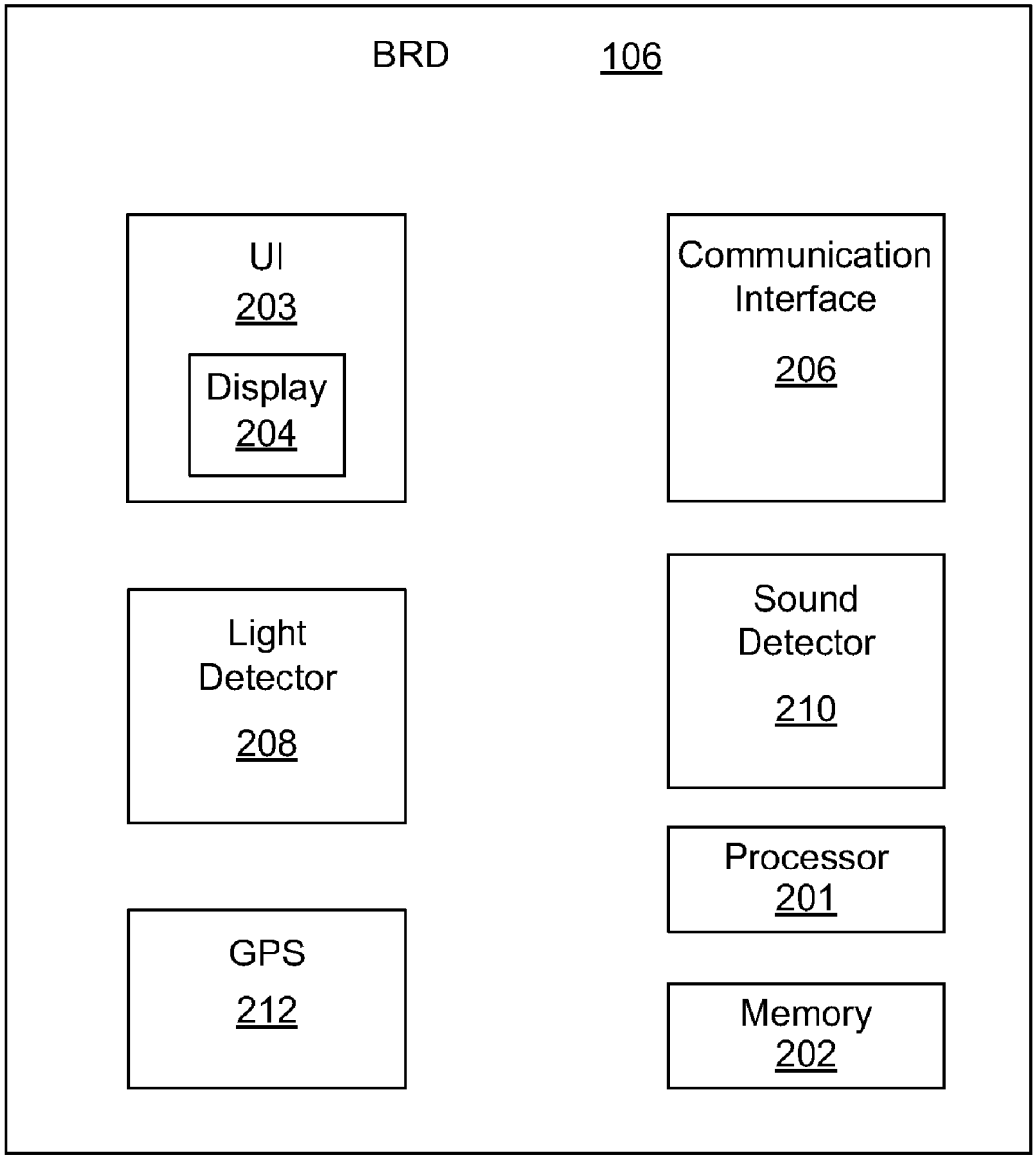
BRD
106
UI
203
Display
204
Communication Interface
206
Light Detector
208
Sound Detector
210
Processor
201
GPS
212
Memory
202

Figure 2A

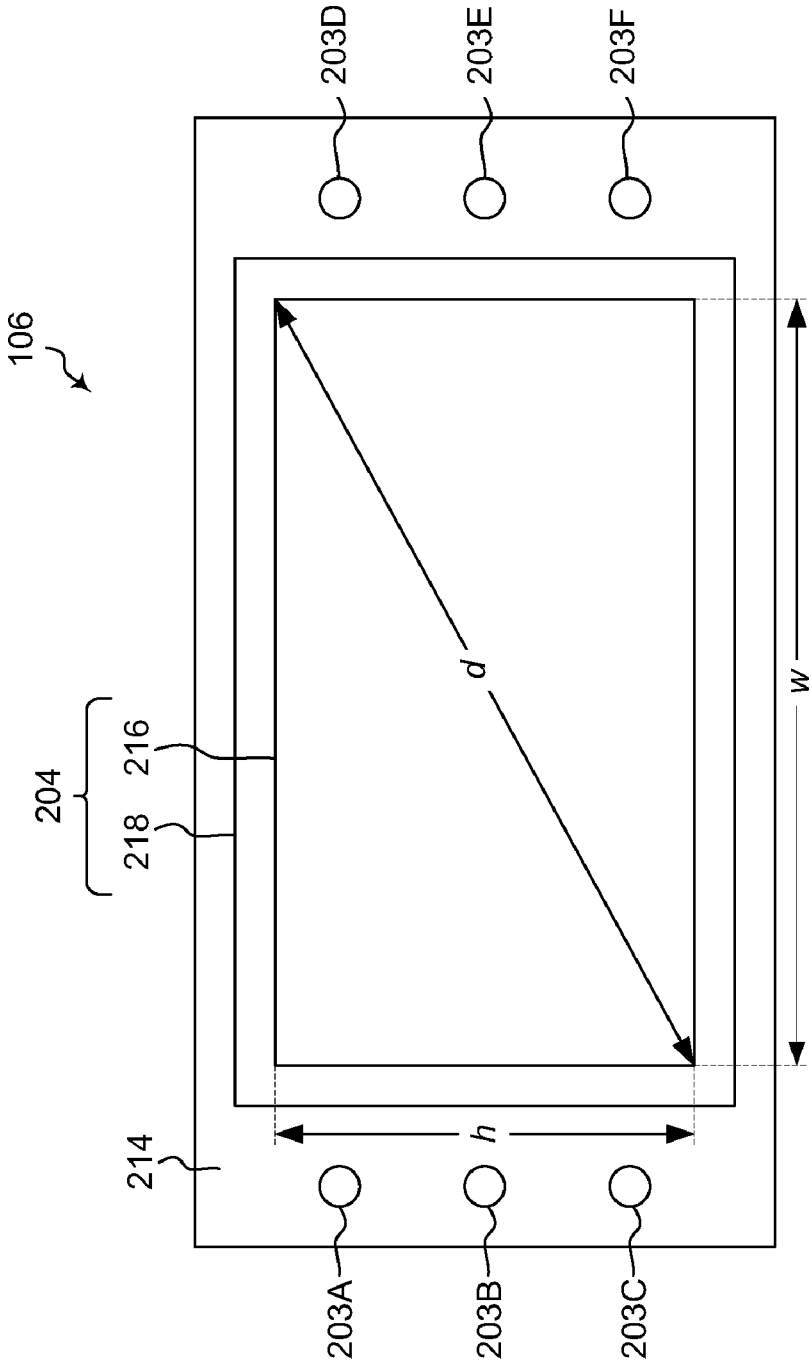

Figure 2B

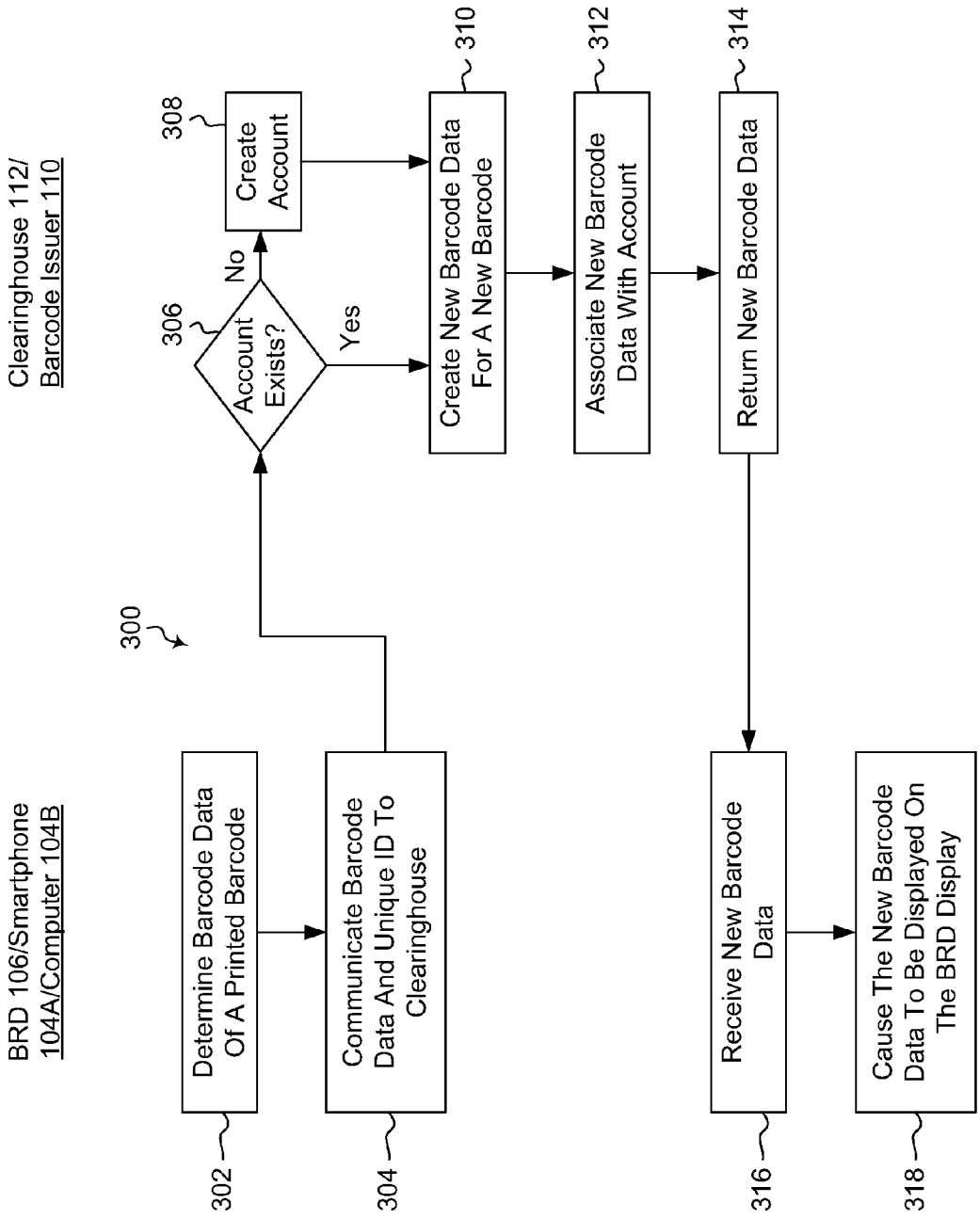
BRD 106/Smartphone 104A/Computer 104B
Clearinghouse 112/ Barcode Issuer 110
300
302
Determine Barcode Data Of A Printed Barcode
304
Communicate Barcode Data And Unique ID To Clearinghouse
306
Account Exists?
No
Yes
308
Create Account
310
Create New Barcode Data For A New Barcode
312
Associate New Barcode Data With Account
314
Return New Barcode Data
316
Receive New Barcode Data
318
Cause The New Barcode Data To Be Displayed On The BRD Display

Figure 3

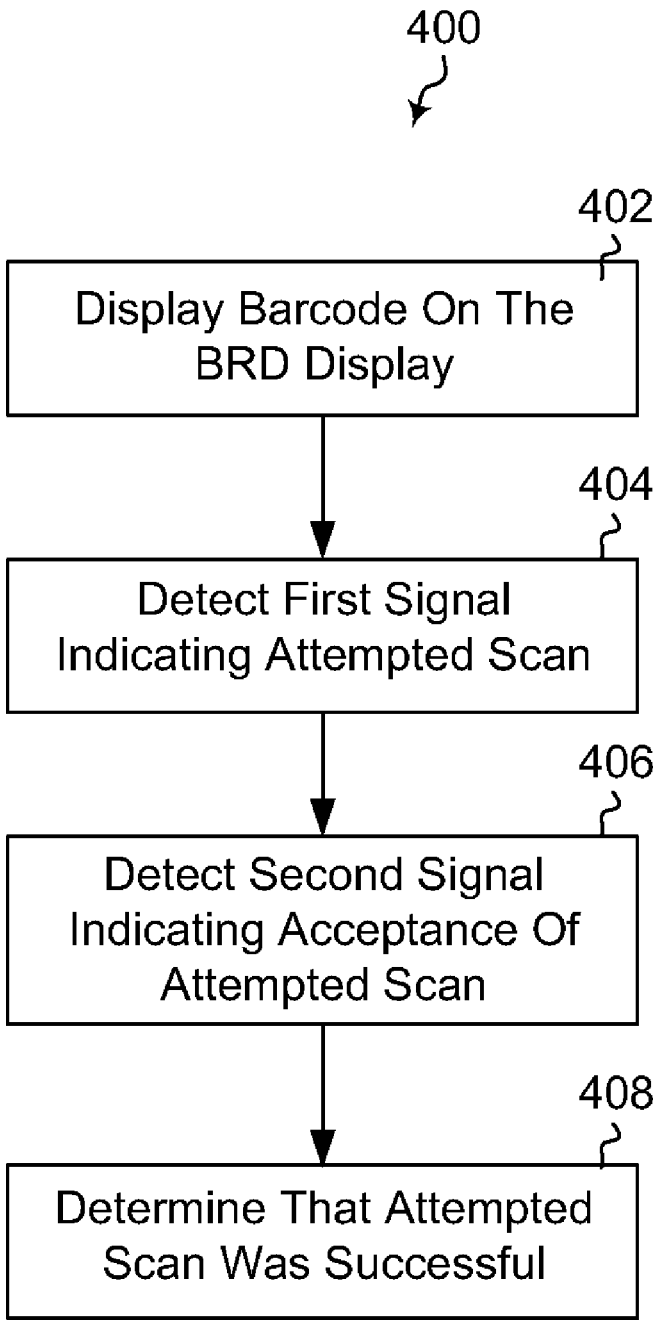
400
402
Display Barcode On The BRD Display
404
Detect First Signal Indicating Attempted Scan
406
Detect Second Signal Indicating Acceptance Of Attempted Scan
408
Determine That Attempted Scan Was Successful

Figure 4

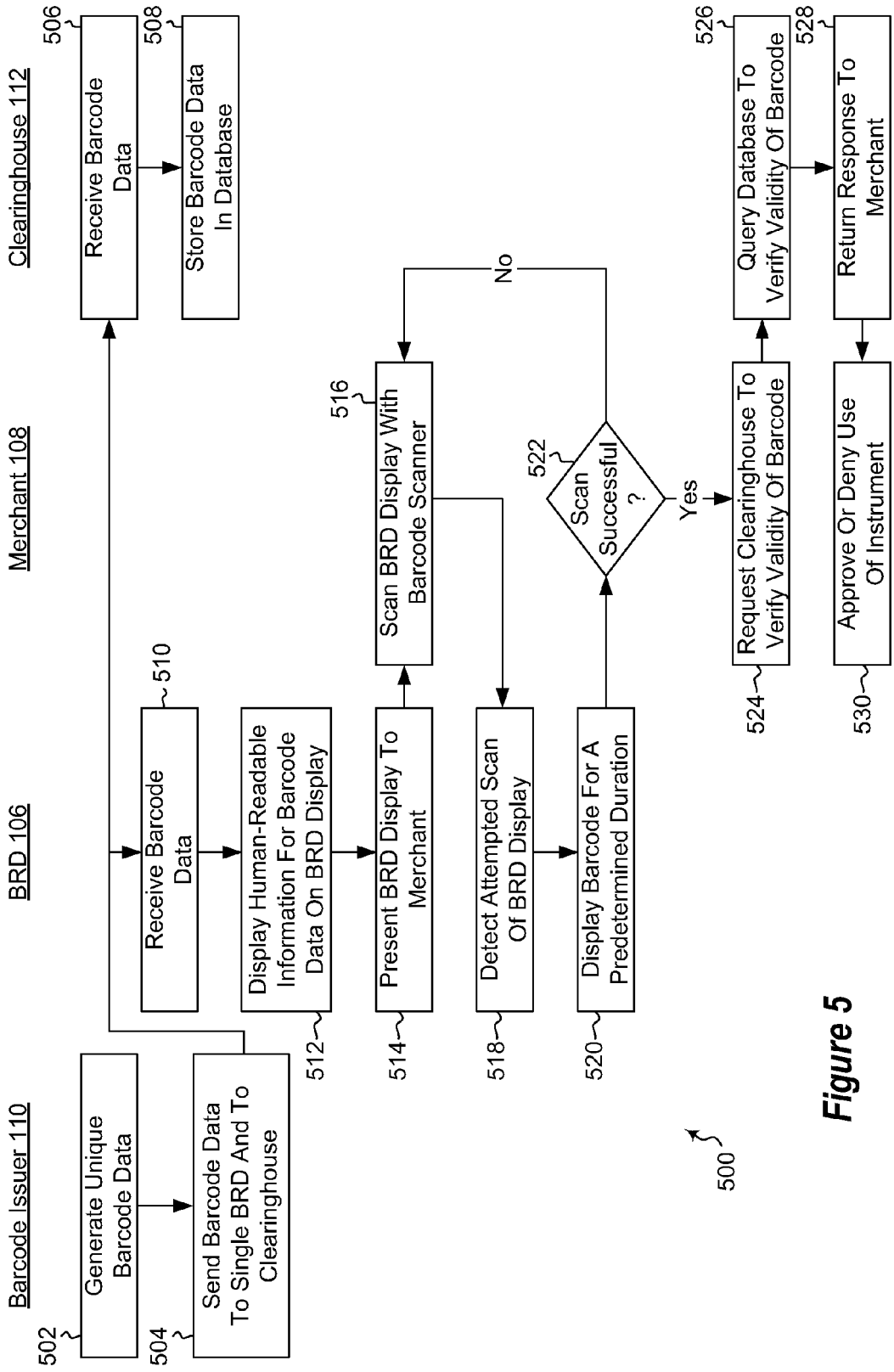
Barcode Issuer 110
Merchant 108
BRD 106
Clearinghouse 112
Generate Unique Barcode Data
502
Send Barcode Data To Single BRD And To Clearinghouse
504
Receive Barcode Data
506
Store Barcode Data In Database
508
Receive Barcode Data
510
Display Human-Readable Information For Barcode Data On BRD Display
512
Present BRD Display To Merchant
514
Scan BRD Display With Barcode Scanner
516
Detect Attempted Scan Of BRD Display
518
Display Barcode For A Predetermined Duration
520
Scan Successful ?
522
No
Yes
Request Clearinghouse To Verify Validity Of Barcode
524
Query Database To Verify Validity Of Barcode
526
Return Response To Merchant
528
Approve Or Deny Use Of Instrument
530
500

Figure 5

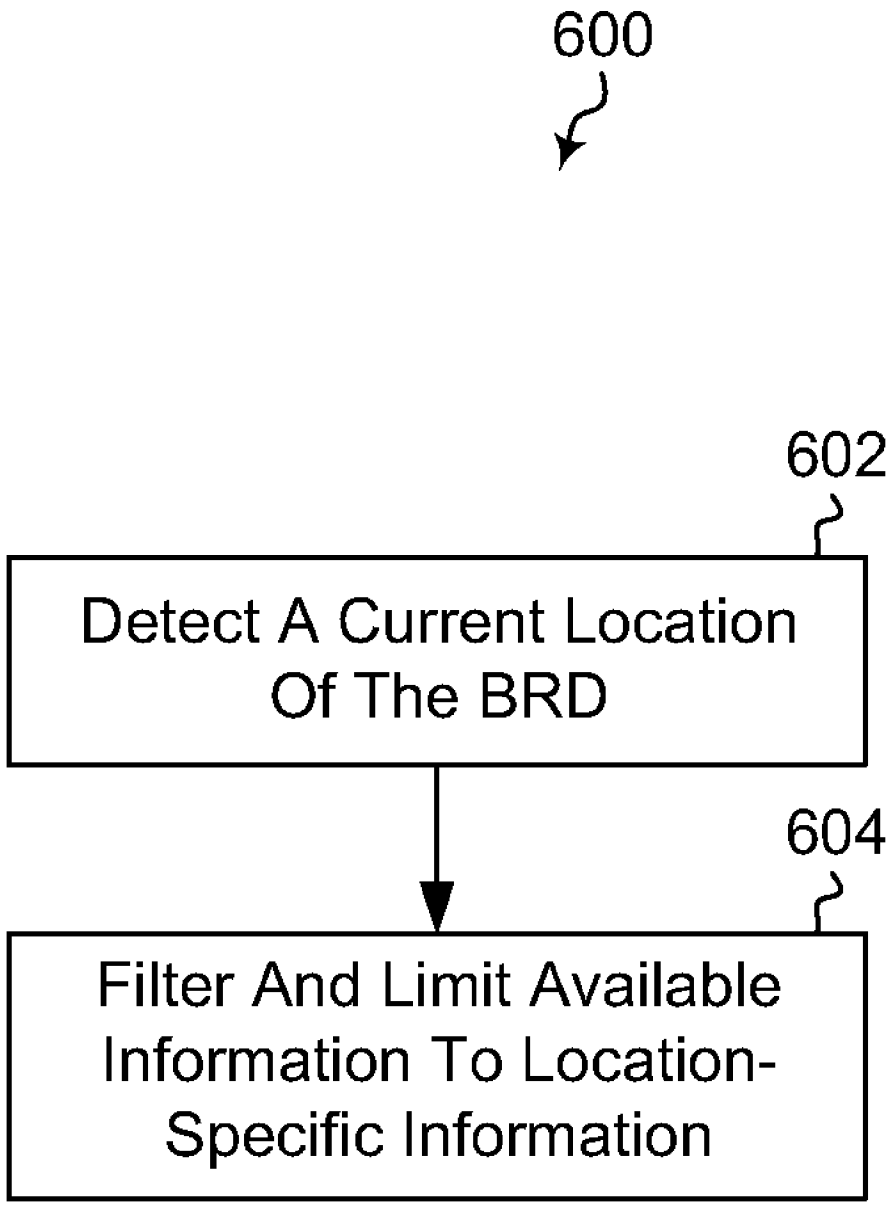
600
602
Detect A Current Location Of The BRD
604
Filter And Limit Available Information To Location-Specific Information

Figure 6

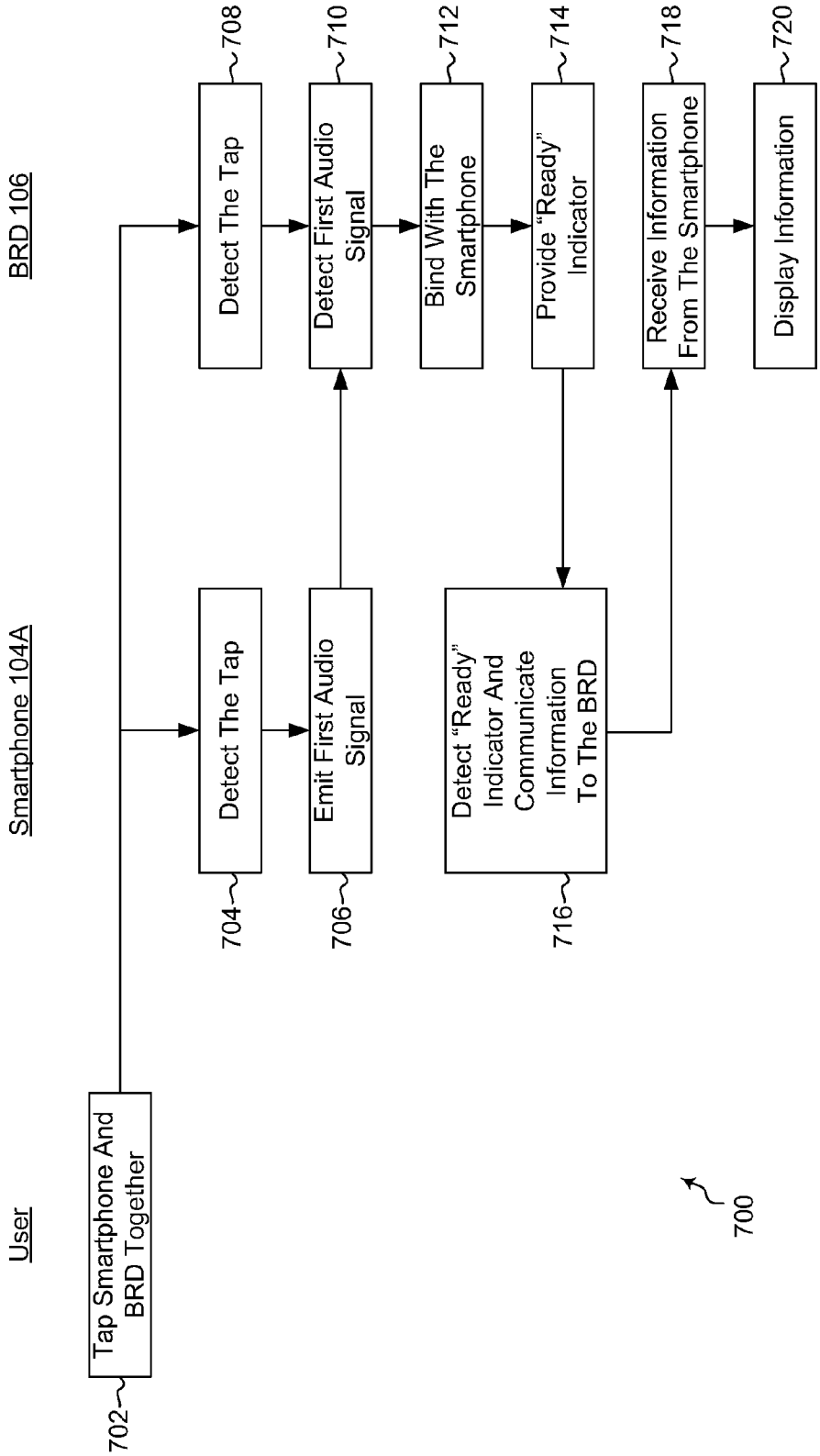
User
Smartphone 104A
BRD 106
Tap Smartphone And BRD Together
702
Detect The Tap
704
Emit First Audio Signal
706
Detect The Tap
708
Detect First Audio Signal
710
Bind With The Smartphone
712
Provide "Ready" Indicator
714
Detect "Ready" Indicator And Communicate Information To The BRD
716
Receive Information From The Smartphone
718
Display Information
720
700

Figure 7

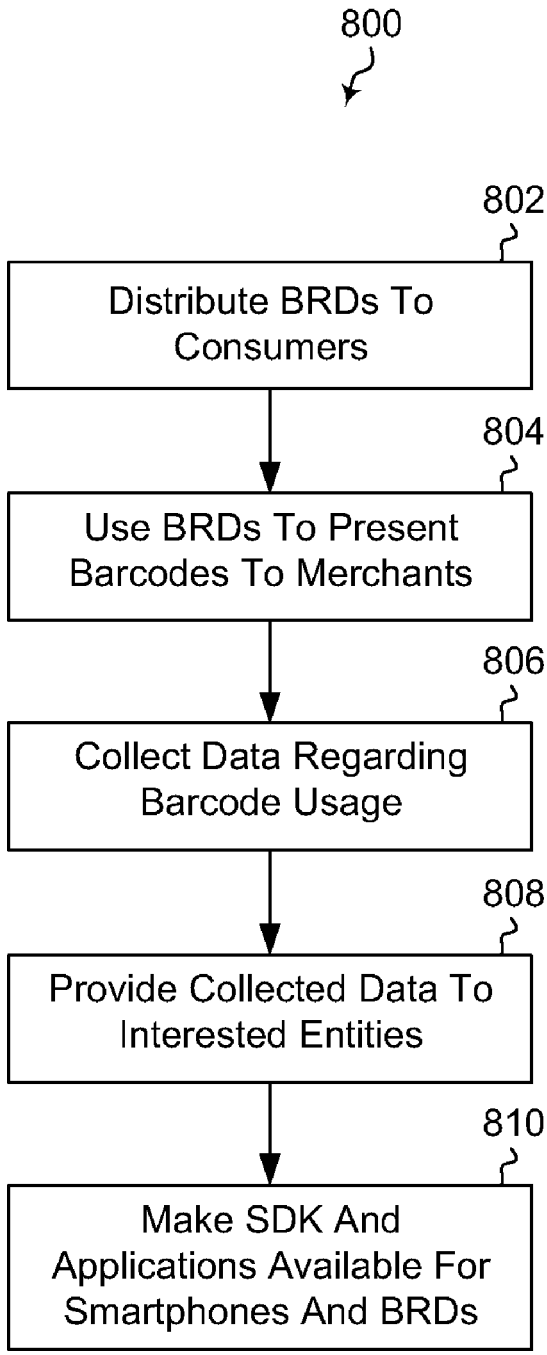
800
802
Distribute BRDs To Consumers
804
Use BRDs To Present Barcodes To Merchants
806
Collect Data Regarding Barcode Usage
808
Provide Collected Data To Interested Entities
810
Make SDK And Applications Available For Smartphones And BRDs

Figure 8

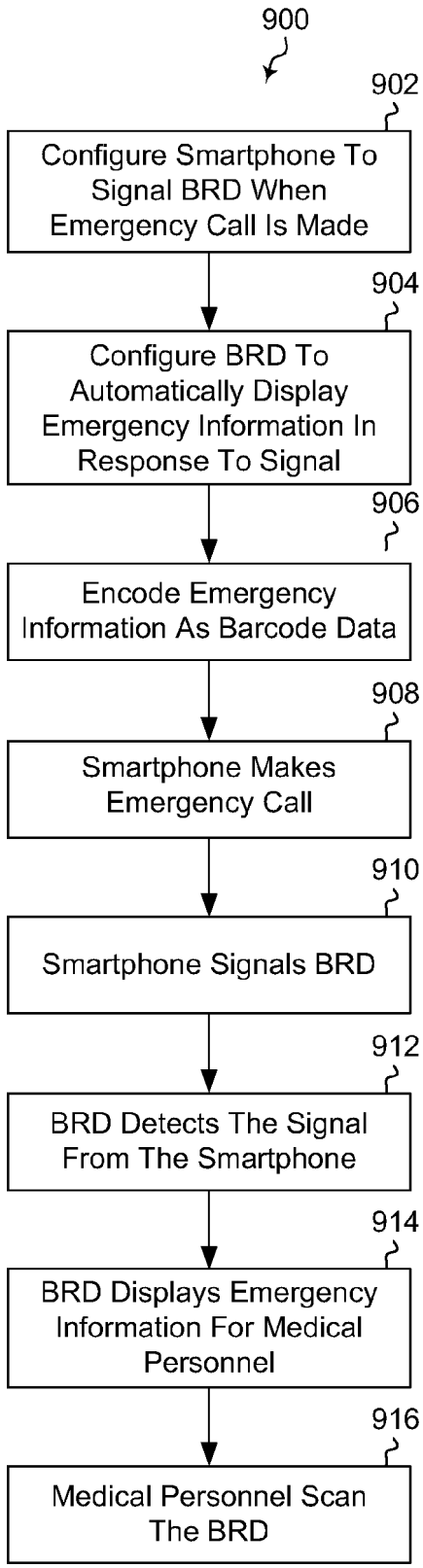
900
902
Configure Smartphone To Signal BRD When Emergency Call Is Made
904
Configure BRD To Automatically Display Emergency Information In Response To Signal
906
Encode Emergency Information As Barcode Data
908
Smartphone Makes Emergency Call
910
Smartphone Signals BRD
912
BRD Detects The Signal From The Smartphone
914
BRD Displays Emergency Information For Medical Personnel
916
Medical Personnel Scan The BRD

Figure 9

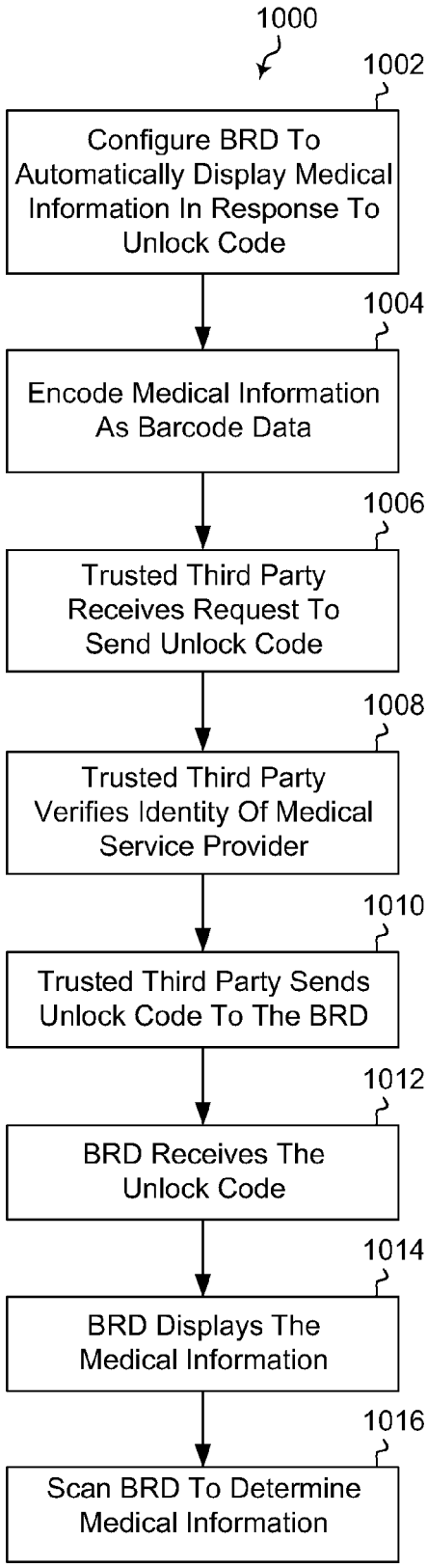
1000
1002
Configure BRD To Automatically Display Medical Information In Response To Unlock Code
1004
Encode Medical Information As Barcode Data
1006
Trusted Third Party Receives Request To Send Unlock Code
1008
Trusted Third Party Verifies Identity Of Medical Service Provider
1010
Trusted Third Party Sends Unlock Code To The BRD
1012
BRD Receives The Unlock Code
1014
BRD Displays The Medical Information
1016
Scan BRD To Determine Medical Information

Figure 10A

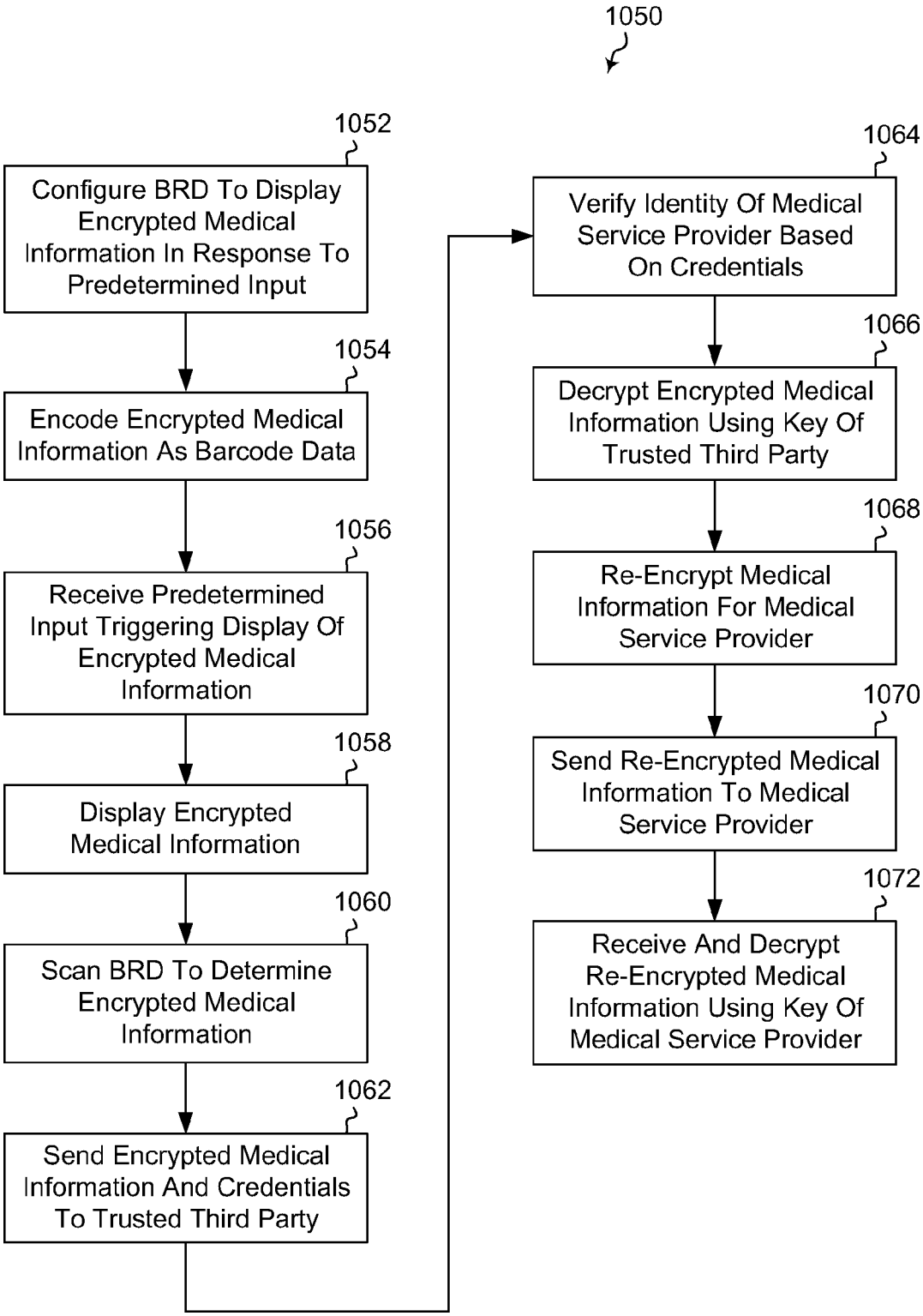
1050
1052
Configure BRD To Display Encrypted Medical Information In Response To Predetermined Input
1054
Encode Encrypted Medical Information As Barcode Data
1056
Receive Predetermined Input Triggering Display Of Encrypted Medical Information
1058
Display Encrypted Medical Information
1060
Scan BRD To Determine Encrypted Medical Information
1062
Send Encrypted Medical Information And Credentials To Trusted Third Party
1064
Verify Identity Of Medical Service Provider Based On Credentials
1066
Decrypt Encrypted Medical Information Using Key Of Trusted Third Party
1068
Re-Encrypt Medical Information For Medical Service Provider
1070
Send Re-Encrypted Medical Information To Medical Service Provider
1072
Receive And Decrypt Re-Encrypted Medical Information Using Key Of Medical Service Provider

Figure 10B

BARCODE RENDERING DEVICE

BACKGROUND

[0001] 1. Field of the Invention

[0002] The present invention generally relates to barcodes. More particularly, some example embodiments relate to a barcode rendering device having a reflective display.

[0003] 2. Related Technology

[0004] Barcodes are ubiquitous in modern life. A barcode is a machine-readable representation of data. Many items purchased in retail stores include a barcode that serves to, among other things, identify the item.

[0005] Barcodes can also be included on coupons, rewards cards, gift cards, preferred member cards, elite status cards, member loyalty cards, and the like. Barcodes included on coupons often identify a particular product or products to which the coupon applies, a number of times the coupon can be redeemed, an expiration date, and a financial discount or rebate that can be received in exchange for presenting the coupon when the product is purchased.

[0006] Barcodes included on rewards cards, gift cards and preferred members cards often identify the corresponding card and/or an account associated with the card. In the case of a rewards card, for instance, a barcode on the rewards card may identify a user or card account where data representing user activity and/or corresponding accrued rewards is stored. As another example, a barcode on a gift card may identify an account that specifies a balance for the gift card; as the gift card is used to make purchases or value is added to the gift card, the balance is adjusted accordingly.

[0007] The subject matter claimed herein is not limited to embodiments that solve any disadvantages or that operate only in environments such as those described above. Rather, this background is only provided to illustrate one exemplary technology area where some embodiments described herein may be practiced.

BRIEF SUMMARY OF SOME EXAMPLE EMBODIMENTS

[0008] In general, example embodiments relate to a barcode rendering device having a reflective display for rendering barcodes readable by a barcode scanner.

[0009] In one example embodiment, a barcode rendering device includes a communication interface, a reflective display, and a detector. The communication interface is configured to receive barcode data corresponding to a barcode in one of a plurality of barcode symbologies. The reflective display is configured to legitimately display barcodes in any of the plurality of barcode symbologies. The detector is configured to detect illumination emitted by a barcode scanner and incident on the reflective display.

[0010] In another example embodiment, a method for redeeming a printed barcode includes determining barcode data of the printed barcode. The method also includes communicating, to a clearinghouse including a database storing barcode data of a plurality of barcodes, barcode data of the printed barcode and a unique identifier associated with a particular user or a particular device. The method also includes receiving new barcode data corresponding to a new barcode, the new barcode data including the barcode data of the printed barcode and a unique signature associated with the particular user or particular device. The method also includes causing the new barcode to be displayed on a reflective display for scanning by a barcode reader.

[0011] In yet another example embodiment, a method of validating a scan of a barcode includes displaying a barcode on a display of a barcode rendering device. The method also includes detecting a first signal indicating an attempted scan of the displayed barcode by a barcode scanner. The method also includes detecting a second signal indicating acceptance of the attempted scan by a point of sale terminal to which the barcode scanner is communicatively coupled. The method also includes determining that the attempted scan of the displayed barcode by the barcode scanner was successful based on the detection of the first and second signals.

[0012] This Summary is provided to introduce a selection of concepts in a simplified form that are further described below in the Detailed Description. This Summary is not intended to identify key features or essential characteristics of the claimed subject matter, nor is it intended to be used as an aid in determining the scope of the claimed subject matter.

[0013] These and other aspects of example embodiments will become more fully apparent from the following description and appended claims.

BRIEF DESCRIPTION OF THE DRAWINGS

[0014] To further clarify various aspects of some embodiments of the present invention, a more particular description of the invention will be rendered by reference to specific embodiments thereof which are illustrated in the appended drawings. It is appreciated that these drawings depict only typical embodiments of the invention and are therefore not to be considered limiting of its scope. The invention will be described and explained with additional specificity and detail through the use of the accompanying drawings in which:

[0015] FIG. **1** illustrates an example operating environment in which embodiments of a barcode rendering device ("BRD") can be implemented;

[0016] FIG. **2**A is a block diagram of an example embodiment of the BRD of FIG. **1**;

[0017] FIG. **2**B is a front view of an example embodiment of the BRD of FIG. **1**;

[0018] FIG. **3** is a flowchart of an example method for redeeming a printed barcode using the BRD of FIG. **1**;

[0019] FIG. **4** is a flowchart of an example method for validating a scan of a barcode displayed on the BRD of FIG. **1**;

[0020] FIG. **5** is a flowchart of an example method for preventing barcodes displayed on the BRD of FIG. **1** from being copied;

[0021] FIG. **6** is a flowchart of an example method for using location information to limit the presentation of information on the BRD of FIG. **1**;

[0022] FIG. **7** is a flowchart of an example method of bonding the BRD of FIG. **1** with a communication device such as a smartphone;

[0023] FIG. **8** is a flowchart of an example method of operating a system including a plurality of BRDs;

[0024] FIG. **9** is a flowchart of an example method of presenting emergency information on the BRD of FIG. **1** to medical personnel;

[0025] FIG. **10**A is a flowchart of an example method of presenting medical information on the BRD of FIG. **1** to a medical service provider; and

[0026] FIG. **10**B is a flowchart of an example method of presenting encrypted medical information on the BRD of FIG. **1** to a medical service provider.

DETAILED DESCRIPTION OF SOME EXAMPLE EMBODIMENTS

[0027] Reference will now be made to the drawings to describe various aspects of some example embodiments of the invention. It is to be understood that the drawings are diagrammatic and schematic representations of such exemplary embodiments, and are not limiting of the present invention, nor are they necessarily drawn to scale.

I. Example Operating Environment

[0028] With reference first to FIG. **1**, an example operating environment **100** is illustrated in which some embodiments can be implemented. The example operating environment includes a network **102**, one or more network-enabled communication devices **104** ("communication devices **104**"), a barcode rendering device ("BRD") **106**, a merchant location **108**, a barcode issuer **110**, and a clearinghouse **112** that includes barcode database **114**.

[0029] The network **102** is illustrated in simplified form and exemplarily includes the Internet, comprising a global internetwork formed by logical and physical connections between multiple wide area networks and/or local area networks. Alternately or additionally, the network **102** includes a cellular RF network and/or one or more wired and/or wireless access points, IP-based networks, or the like. The network **102** also includes servers that enable one type of network to interface with another type of network.

[0030] The communication devices **104** include a smartphone **104**A and a desktop PC **104**B. Other examples of communication devices with which some embodiments can be implemented include mobile phones, laptop computers, personal digital assistants, or other devices able to communicate over the network **102**. The communication devices **104** are configured to communicate with and exchange data over the network **102** using a suitable wired or wireless standard, such as, but not limited to, IP, HTTP, HTTPS, 802.xx standards, mobile telephony standards (e.g., GSM, CDMA, CDMA 2000, HSDPA, EV-DO, LTE Advanced, etc.), Bluetooth standards including Bluetooth Personal Area Network ("Bluetooth PAN") and Bluetooth Human Interface Device ("Bluetooth HID"), or the like or any combination thereof. In some embodiments, communication devices **104** receive and store barcode data and communicate with the BRD **106** to cause the BRD **106** to display corresponding barcodes as needed.

[0031] The BRD **106** is configured to graphically display barcodes from one or more of a plurality of barcode symbologies. The barcodes may represent coupons, rewards cards, gift cards elite status cards, member loyalty cards, or other instruments typically including a barcode.

[0032] Alternately or additionally, the barcodes represent account information associated with a particular account, or other information that may be useful to a particular application or in other contexts. By way of example, a game application, fitness application, or other application may allot virtual points or credits to a user for performing certain tasks or in exchange for money, or under other circumstances. The virtual points/credits or other information is stored in a user account. The game/fitness application or some other application may be configured to encode information from the user account, such as the user's virtual points/credits, into barcode data that can be rendered as a barcode on the BRD **106**. In some embodiments, the user can then present the barcode for scanning to any merchant **108** that accepts virtual points/credits to thereby redeem the virtual points/credits for a purchase, or the like.

[0033] Embodiments of the invention may be configured to display barcodes from barcode symbologies including, but not limited to, Code 128, Code 39, PDF417, UPC, EAN, and the like. In some embodiments, the BRD **106** receives the barcodes over the network **102** from the barcode issuer **110**, clearinghouse **112** and/or merchant **108**. In these and other embodiments, the BRD **106** is a network-enabled device with appropriate hardware and software for communicating over the network **102** via a wired and/or wireless communication interface. Alternately or additionally, the BRD **106** receives the barcodes from the smartphone **104**A or desktop computer **104**B via a wired or wireless communication interface.

[0034] Alternately or additionally, the merchant **108**, barcode issuer **110** and clearinghouse **112** each include one or more network-enabled computing devices with appropriate hardware and software for communicating over the network **102** and performing the other functions described herein. When the description herein refers to the merchant **108**, barcode issuer **110** and/or clearinghouse **112** performing a certain action, it is understood that the action is generally performed in whole or in part by the corresponding network-enabled computing device unless context suggests otherwise.

[0035] Accordingly, the BRD **106** is configured in some embodiments for operation in any one of a plurality of modes, such as a fully autonomous mode, a proxy mode, and a remote display mode. In fully autonomous mode, the BRD **106** receives barcode data directly from a barcode source, e.g., barcode issuer **110**, and makes rendering decisions about when and how to render information, such as barcodes. In proxy mode, the BRD **106** essentially functions as an information conduit for another communication device **104** while rendering decisions about what and when to render are made by the BRD **106**. In remote display mode, all decisions about what and when to render are made by the communication device **104** and the BRD **106** essentially functions as a remote display for the communication device **104**.

[0036] With continued reference to FIG. **1**, a barcode scanner **116** at the merchant location **108** is connected to a point of sale ("POS") terminal **118**. The barcode scanner **116** includes at least a light source and a light sensor in some embodiments. In operation, the barcode scanner emits, via the light source, illumination towards a printed barcode or a barcode displayed on the BRD **106**, the printed or displayed barcode representing data encoded by the barcode. The light sensor of the barcode scanner **116** detects a reflected light signal representing the printed or displayed barcode and converts the reflected light signal to an electrical signal which is decoded (by the barcode scanner **116** or the POS terminal **118**) to barcode data.

[0037] In other embodiments, the barcode scanner **116** includes a camera that captures one or more images of a printed barcode or a barcode displayed on the BRD **106**. In these and other embodiments, the barcode scanner **116** may implement one or more image recognition algorithms to recognize and decode the barcode included in the image captured by the camera and thereby extract the corresponding barcode data.

[0038] Accordingly, while two specific implementations of the barcode scanner **116** have been disclosed herein, the barcode scanner **116** can more generally include any implementation suitable for reading a printed or displayed barcode. Moreover, for ease of discussion, some of the embodiments disclosed below are described in the context of a barcode scanner **116** including at least a light source and a light sensor. It will be understood, however, that different types of barcode scanners, such as a camera-based barcode scanner, can alternately or additionally be implemented in the disclosed embodiments unless context suggests otherwise.

[0039] Returning to FIG. **1**, to reduce the fraudulent use of coupons, gift cards, and other instruments that include a barcode, the POS terminal **118** communicates with the clearinghouse **112** to verify barcode data extracted from a printed or displayed barcode. In some embodiments, for example, the clearinghouse **112** includes a barcode database **114** that stores barcode data for a plurality of coupons, gift cards or other instruments. Optionally, the barcode database **114** further includes one or more of an expiration date for a coupon and/or card, minimum and/or maximum number of items to which a coupon can be applied, a user account with which a coupon and/or card is associated, or the like. In these and other embodiments, the clearinghouse **112** may query the barcode database **114** with the barcode data received from the POS terminal **118** to verify the barcode data.

[0040] For example, in the case of barcode data corresponding to a coupon, the clearinghouse **112** may determine whether the coupon is expired, the minimum/maximum number of items to which the coupon can be applied, or the like. Or, in the case of barcode data corresponding to a gift card, the clearinghouse **112** may determine whether the gift card has been activated, an available balance of the gift card, etc.

[0041] The clearinghouse **112** returns a response to the POS terminal **118** indicating whether the barcode data has been verified and the POS terminal **118** proceeds accordingly. For instance, if barcode data of a coupon for a product is verified, the POS terminal **118** may apply a discount to the price of the product, or the like.

[0042] The barcode issuer **110** issues coupons and/or other instruments with barcodes. The coupons or other instruments can be issued in print form and/or in electronic form for display on the BRD **106**. The barcodes included on the issued coupons or other instruments can be unique or generic. Alternately or additionally, the issued coupons or other instruments can be multicast or unicast to consumers by the barcode issuer **110** or other issuing entity.

[0043] Multicasting refers to distributing a generic barcode to multiple consumers through an appropriate distribution channel, such as the mail, newspapers, magazines, the Internet, or the like or any combination thereof. Unicasting refers to distributing unique barcodes to consumers, where each barcode is unique for a particular consumer and optionally identifies the particular consumer. Unicasting facilitates behavior tracking and in some examples is enabled by embodiments of the BRD **106**, as described in more detail herein.

II. First Embodiment of Barcode Rendering Device

[0044] Turning next to FIG. **2**A, a block diagram of an example embodiment of BRD **106** is provided. In the illustrated embodiment, the BRD **106** includes a processor **201**, memory **202**, user interface ("UI") **203** including display **204**, and communication interface **206**. Optionally, the BRD **106** further includes a light detector **208**, a sound detector **210** and a GPS module **212**.

[0045] The processor **201** is configured to execute computer instructions stored in memory **202** or other computer-readable storage medium. Execution of the computer instructions by the processor **201** causes the BRD **106** to perform one or more of the acts described herein.

[0046] The UI **203** includes various input and output devices that permit a user to interact with the BRD **106**. For instance, the display **204** is one example of an output device included in the UI **203**. Optionally, the display **204** is a touch-screen display in which case the display **204** is also an example of an input device. Other input devices of the UI **203** may include a microphone, keypad, buttons, accelerometer, or the like. Other output devices of the UI **203** may include one or more speakers, vibrators, or the like.

[0047] The communication interface **206** is configured to communicatively couple the BRD **106** to, e.g., the smartphone **104**A, desktop computer **104**B, merchant **108**, barcode issuer **110** or clearinghouse **112**. The communication interface **206** according to some embodiments includes one or more of a USB port, Ethernet port, FireWire port, an 802.xx-compliant transmitter and/or receiver, a Bluetooth device, a mobile telephony transmitter and/or receiver, or the like. In some embodiments, the communication interface **206** receives barcode data corresponding to barcodes in any of a plurality of barcode symbologies from, e.g., the smartphone **104**A, desktop computer **104**B, etc.

[0048] The light detector **208** is configured to detect illumination incident on the light detector **208**. In particular, the light detector **208** is configured to detect an amplitude of incident illumination. Alternately or additionally, the light detector **208** is configured to detect illumination having a wavelength(s) within a particular optical wavelength range, such as illumination having a wavelength of about 632.8 nanometers, 670 nanometers, or other wavelength of illumination typically used in barcode scanners **116**. In this regard, light having a wavelength of about 632.8 nanometers or about 670 nanometers is typically emitted by Helium Neon ("HeNe") lasers and Aluminum Gallium Indium Phosphide ("AlGaInP") lasers, respectively, and HeNe lasers and AlGaInP lasers are often used in barcode scanners. In some embodiments, the light detector **208** is positioned so as to detect illumination incident on a front of the display **204**.

[0049] The sound detector **210** is configured to detect audio signals. For example, the sound detector **210** may be configured to detect the amplitude and/or frequency of audio signals, such as the audio tones emitted by some POS terminals **118** in response to a successful scan of a barcode. Alternately or additionally, the sound detector **210** is configured to detect audio signals having a frequency(ies) within a particular audio frequency range.

[0050] The GPS module **212** includes one or more chips configured to perform various functions associated with determining a location of the BRD **106**. By way of example, the GPS module **212** includes one or more of a tracker, an engine, and a system-on-a-chip ("SOC"). The tracker is configured to demodulate and decode incoming RF from satellites and to computer pseudoranges. The engine computes position, velocity, and time for the BRD **106** using the computed pseudoranges and ephemeris data. The SOC enables end applications such as navigation applications.

[0051] With additional reference to FIG. **2**B, a front view of an example BRD **106** is provided according to some embodiments. In the illustrated embodiment of FIG. **2**B, the BRD **106** includes a housing **214** and one or more buttons **203**A-**203**F or other UI elements for performing input functions.

[0052] In some examples, the display **204** substantially occupies the front of the BRD **106**. Alternately, the display **204** may occupy a relatively smaller or larger percentage of the front of BRD **106** in other embodiments.

[0053] As depicted in FIG. **2**B, the display **204** includes a pixel array **216** and a blank mask **218** surrounding the pixel array **216**. All or a portion of the blank mask **218** in some examples functions as one or more quiet zones for barcodes rendered on the display **204**. A barcode quiet zone is a blank area at the beginning or end of a barcode that extends a predetermined distance from the beginning or end of the barcode. Generally, the barcode quiet zone should be the same color and reflectivity as the spaces of the barcode. Accordingly, the blank mask **218** is configured in some examples such that a color and reflectivity of the blank mask **218** is the same as a color and reflectivity of the spaces of a barcode rendered on the display **218**.

[0054] Although illustrated as part of the display **204**, the blank mask **218** in other embodiments is part of the housing **214**. Alternately, the blank mask **218** is omitted altogether. In these and other embodiments, portions of the pixel array **216** extending from the beginning and end of a barcode displayed on the pixel array **216** can function as quiet zones at the beginning and end of the barcode. Optionally, portions of the pixel array **216** can function as quiet zones for sufficiently short barcodes even when the display **204** includes the blank mask **218**.

[0055] The pixel array **216** includes a plurality of pixels arranged in an array in columns and rows. The pixel array **216** is characterized in some embodiments by the number of rows and the number of columns in the pixel array **216**. The number of rows and columns of a pixel array in a display is commonly referred to as display resolution. Alternately or additionally, the pixel array **216** is characterized by a width w, height h, and/or diagonal d of the pixel array **216**.

[0056] According to some embodiments, the pixel array **216** of display **204** is configured to legitimately display barcodes in any one of a plurality of barcode symbologies. As used herein, a barcode symbology defines one or more of the symbols (e.g., bars, spaces, dots, squares, hexagons, etc.) used in the barcode symbology, a mapping between characters and the symbols, and a size and location of one or more quiet zones for the barcode. Legitimately displaying a barcode in some examples includes displaying a barcode substantially in conformity with a corresponding barcode symbology. In some embodiments, displaying a barcode in conformity with the corresponding barcode symbology ensures that the barcode will be properly scanned within a predetermined maximum number of read attempts. Conforming with a barcode symbology may include conforming line and/or space width to certain minimum and/or maximum standards, conforming line and/or space height to certain minimum and/or maximum standards, conforming a length of the barcode to a certain length standard, or the like or any combination thereof.

[0057] Before proceeding with additional description of the pixel array **216**, general aspects of some barcode symbologies will be described. Each symbology typically specifies a module width, which is the width of a bar or space (or other symbol) in the symbology, and/or a module height, which is the height of a bar or space (or other symbol) in the symbology. The module width may be specified as a nominal module width with a corresponding minimum and maximum limit that define a range of permitted module widths, and/or as a minimum and maximum width that define a range of permitted module widths. For example, the UPC barcode symbology specifies a nominal module width of 13 mils with minimum and maximum limits of 80% (e.g., 10.4 mils) and 200% (e.g., 26 mils). As another example, the Code 128 barcode symbology specifies a minimum module width of 7.5 mils and a maximum module width of 50 mils.

[0058] A bar is typically a symbol including a foreground color, such as black, that is configured to substantially absorb incident illumination. A space is typically a symbol including a background color, such as white, that is configured to substantially reflect incident illumination.

[0059] In two-width symbologies, each bar or space is either wide or narrow. In many-width symbologies, the width of each bar or space is typically an integer multiple of the module width. Some many-width symbologies use four widths of 1, 2, 3 and 4 modules.

[0060] According to each symbology, a given character—also referred to as a codeword—in the symbology is made up of some combination of bars and spaces (or other symbols in the case of 2-d symbologies).

[0061] Some symbologies specify control characters and other padding for inclusion in and/or at specific locations of barcodes conforming to the corresponding symbology. Control characters include, for instance, start and stop markers. Alternately or additionally, a given symbology may specify the size and/or location of quiet zones that should surround barcodes conforming to the symbology.

TABLE 1

Symbology	Minimum Module width (in mils)	Bars per Character	Spaces per Character	Modules per Character
Code 128	7.5	3	3	11
Code 39	7.5	5	4	9
PDF417	7.5	4	4	17
UPC	10.4	2	2	7
EAN	10.4	2	2	7

[0062] The minimum number of modules required for a barcode in a given symbology is given by the following formula:

$$M_M = P + C * M_C \quad \text{(Eq. 1)}$$

where M_M is the calculated minimum number of modules, P is the padding for the symbology, C is the number of characters per barcode specified by the symbology, and M_C is the number of modules per character for the symbology. For a UPC barcode including padding of 2 guard bars of 4 modules/guard bar, a middle pad of 3 modules, and including 12 characters, the calculated minimum number of modules M_M is given by (2*4)+3+12*7=95 modules.

[0063] The minimum number of pixels for a display, such as the display **204**, to legitimately render a bar code in a given symbology is one pixel per module, provided that the width of each pixel is equal to a width within the range of permitted module widths for the given symbology. Alternately or additionally, two or more pixels per module may be used where the width of each pixel is equal to a width within the range of

permitted module widths divided by an integer. The constraint that the width of each pixel be equal to a width within the range of permitted module widths in the case of one pixel per module or to a width within the range of permitted module widths divided by an integer in the case of multiple pixels per module is referred to hereinafter as the "module constraint".

[0064] Accordingly, at one pixel per module, a UPC barcode that is 95 modules long can be rendered on a display that is at least 95 pixels long. Or, at two pixels per module, a UPC barcode that is 95 modules long can be rendered on a display that is at least 190 pixels long. A Quarter Common Intermediate Format ("QCIF") display having a display resolution of 176×144 would be sufficient for rendering the UPC barcode at one pixel per module, while it would be insufficient for rendering the UPC barcode at two pixels per module.

[0065] Another example involves a gift card including a Code 128 barcode. For a Code 128 barcode, the padding P is usually 35 modules, and the number of modules per character is 11 modules. If the barcode represents only numeric characters, as opposed to alphanumeric characters, each character in the barcode symbology can encode two numeric characters. In view of the foregoing and equation 1, the minimum number of modules M_M in a Code 128 barcode representing 22 numeric characters is given by 35+(11*(22/2))=156 modules. Such a Code 128 barcode could theoretically fit on a QCIF screen subject to the module constraint.

[0066] Some commonly deployed barcode lengths are listed in Table 2 below. The barcode lengths listed in Table 2 do not include quiet zones.

TABLE 2

Retail Use	Symbology	Characters/ Barcode	Padding or Overhead	Total Length of Barcode (in modules)
Gift Card (numeric characters only)	Code 128	30	35	200
Gift Card (numeric characters only)	Code 128	22	35	156
Gift Card (alpha-numeric characters)	Code 128	22	35	277
Product Label	UPC	12	11	95
Product Label	EAN	13	11	102

From Table 2, it can be seen that a QCIF display includes sufficient pixels to render a Code 128 barcode representing 22 numeric characters, a UPC barcode or an EAN barcode subject to the module constraint. However, a QCIF display lacks sufficient pixels for rendering either a Code 128 barcode representing 30 numeric characters or a Code 128 barcode representing 22 alphanumeric characters.

[0067] The effect of the module constraint can be understood in association with Table 3.

TABLE 3

Diagonal d	10 mils/ Module	10.4 mils/ Module	11 mils/ Module	12 mils/ Module	13 mils/ Module
1.5"	124	120	113	104	96
1.6"	133	128	121	110	102
1.7"	141	136	128	117	108
1.8"	149	144	136	124	115
1.9"	158	152	143	131	121

TABLE 3-continued

Diagonal d	10 mils/ Module	10.4 mils/ Module	11 mils/ Module	12 mils/ Module	13 mils/ Module
2.0"	166	160	151	138	128
2.1"	174	168	158	145	134
2.2"	183	176	166	152	140
2.3"	191	184	173	159	147

In Table 3, the first column lists the diagonal d of various displays, while the top row lists various module widths. Each cell to the right of the first column and below the first row identifies the number of pixels of the same width as the corresponding module width that would fit in the x-direction of a display having a corresponding diagonal d. The calculations performed to determine the number of pixels listed in the cells to the right of the first column and below the first row assume that the ratio of the x-dimension to the y-dimension of the display is about 1.467 for a given diagonal d.

[0068] Those skilled in the art will appreciate, with the benefit of the present disclosure, that analogous tables to Table 3 can be calculated for the same or different diagonal dimensions d, the same or different module widths, and the same or different x:y ratios. Accordingly, Table 3 is provided by way of illustration only, and not by way of limitation.

[0069] With continued reference to Table 3, and by way of example, to satisfy the module constraint for a module width of 10 mils, a display with a diagonal d of 1.5 inches will have 124 pixels. Alternately or additionally, any display with a diagonal d of 1.5 inches and having an integer multiple of 124 pixels in the x-direction will also satisfy the module constraint.

[0070] If a display has sufficiently high display resolution, a pixel width smaller than the module width can be used to permit the display to legitimately render each of multiple barcode symbologies having different module widths. For instance, a display with pixels each having a width of 2.6 mils provides a 10.4 mil module width in 4 pixels for, e.g., UPC and EAN barcodes. Such a display also provides a 7.8 mil module width in 3 pixels, where the 7.8 mil module width is within the range of permitted module widths specified by Code 128, Code 39, PDF417 and other barcode symbologies. As another example, a display with pixels each having a width of 1.5 mils provides a 10.5 mil module width in 7 pixels for, e.g., UPC and EAN barcodes, and a 7.5 mil module width in 5 pixels for, e.g., Code 128, Code 39 and PDF 417 barcodes.

[0071] Thus, to legitimately render a barcode in a given symbology, the display in some embodiments satisfies both the module constraint and a resolution constraint requiring that the resolution in at least one dimension of the display be at least an integer multiple of the minimum barcode length (in modules) of the given symbology. Generally, the resolution required to satisfy the resolution constraint increases as pixel width decreases below the module width and as the minimum barcode length increases.

[0072] Table 4 identifies the horizontal and vertical pixel resolutions and the diagonal d in inches of twenty-four example displays that satisfy the resolution constraint for a Code 128 barcode having thirty numeric characters (see Table 2). In some embodiments, any display having one of the horizontal and vertical resolution pairs shown in Table 4 that has a corresponding diagonal greater than that shown in Table 4 will also satisfy the resolution constraint. Moreover, Table 4

assumes that the pixels of the displays are substantially square. Those skilled in the art will appreciate, with the benefit of the present disclosure, the adjustments and/or modifications to be made, if any, to accommodate pixels with shapes other than square shapes.

TABLE 4

Horizontal Resolution	Vertical Resolution	Diagonal d (in inches)
160	240	2.16
162	216	2.03
176	208	2.04
176	220	2.11
208	104	1.74
208	208	2.21
208	320	2.86
220	176	2.11
230	90	1.85
240	160	2.16
240	240	2.55
240	260	2.65
320	240	3.00
320	320	3.39
352	288	3.41
480	320	2.16
640	200	1.68
640	320	1.79
640	480	2.00
858	1144	2.15
960	1280	2.00
1152	864	2.16
1280	960	2.00
1280	1024	2.05

[0073] Returning to FIG. **2**B, in some embodiments, the pixel array **216** of display **204** is configured to satisfy the module constraint for each of a plurality of barcode symbologies having different module widths. Alternately or additionally, the pixel array **216** of display **204** is configured to satisfy the resolution constraint for each of a plurality of barcode symbologies which have the same or different minimum barcode lengths.

[0074] For instance, the display **204** may satisfy the module constraint for each of multiple symbologies, at least one of which has a minimum module width of 7.5 mils and at least one of which has a minimum module width of 10.4 mils. Consider the case of displaying a UPC and a Code 128 barcode on display **204** having a pixel width of 2.6 mils. From tables 1 and 2, to render the UPC barcode, four pixels per module satisfies the module constraint (e.g., 4 pixels/module×2.6 mils/pixel=10.4 mils/module) and yields a minimum of 380 pixels (e.g., 4 pixels/module×95 modules/barcode=380 pixels/barcode) to satisfy the resolution constraint. Also from tables 1 and 2, to render a 22-digit numeric Code 128 barcode, three pixels per module satisfies the module constraint (e.g., 3 pixels/module×2.6 mils/pixel=7.8 mils/module) and yields a minimum of 468 pixels (e.g., 3 pixels/module×156 modules/barcode=468 pixels/barcode) to satisfy the resolution constraint. Taking the larger of the two pixel requirements indicates that a display with a resolution in at least one direction greater than or equal to 468 and a pixel width of 2.6 mils would satisfy the module constraint and resolution constraint for both a UPC barcode and a 22-digit numeric Code 128 barcode. For instance, such a display may have a resolution in at least one direction of 480 pixels. In these and other embodiments, the pixel array **216** of display **204** optionally includes a resolution of 480×320 pixels and a diagonal d of 1.5".

[0075] Given the number of characters a particular barcode symbology may encode, that symbology defines a name space that is limited in number. As used herein, the term "name space" refers to the unique characters available given a particular barcode length and the number of characters per barcode in the given barcode symbology. For instance, a UPC barcode with a length of 95 modules and 12 characters per barcode has a much smaller name space than a Code 128 barcode with a length of 277 modules and 22 alphanumeric characters per barcode.

[0076] Some embodiments disclosed herein involve unique barcodes distributed on a large scale, e.g., in a unicast manner. Whereas some barcode symbologies have a fixed barcode length, such as the UPC symbology, that limits the size of the namespace for that symbology, such barcode symbologies may not be suitable for large-scale distribution of unique barcodes in a print format.

[0077] According to some embodiments, however, layered barcodes are implemented to effectively increase the size of the namespace in a particular barcode symbology. As used herein, a layered barcode refers to a plurality of separate barcodes that collectively represent a single coupon, gift card, rewards card, or the like. In these and other embodiments, the layered barcode is presented to a barcode scanner by sequentially displaying the separate barcodes making up the layered barcode on the display **204** of BRD **106**. Optionally, the sequential display of the separate barcodes is automatically triggered in some embodiments in response to validating a current scan or otherwise confirming that a current scan is successful. It is understood, with the benefit of the present disclosure, that such layered barcodes can be used to greatly increase the namespace size of a given barcode symbology versus a non-layered implementation of the same barcode symbology.

III. Example Methods of Operation

[0078] Turning next to FIGS. **3**-**10**, various example methods of operation are described according to some embodiments of the invention. One skilled in the art will appreciate that, for the processes and methods disclosed herein, the acts performed in the processes and methods may be implemented in differing order than disclosed herein. Furthermore, the outlined acts and operations are only provided as examples, and some of the acts and operations may be optional, combined into fewer acts and operations, or expanded into additional acts and operations without detracting from the essence of the disclosed embodiments.

[0079] FIG. **3** is a flowchart of an example method **300** for redeeming a printed barcode. The method **300** is executed in some embodiments by the BRD **106**, clearinghouse **112** and/or barcode issuer **110**. In other embodiments, the method **300** is executed by the smartphone **104**A, desktop computer **104**B, or other communication devices and the clearinghouse **112** and/or barcode issuer **110**.

[0080] At **302**, barcode data of a printed barcode is determined. The printed barcode in some embodiments is a barcode printed on a coupon, a gift card, rewards card, or the like. In the case of a coupon, the barcode data may identify one or more products to which the coupon applies, the number of products to which the coupon can be applied, an expiration date, or the like.

[0081] The barcode data is determined **302** in some embodiments by capturing an image of the printed barcode and performing digital image processing on the captured

image to decode the barcode in the captured image. For example, the BRD **106**, smartphone **104**A or desktop computer **104**B may include a camera for capturing the image of the printed barcode and hardware/software for performing digital image processing to decode the barcode in the captured image.

[0082] The barcode data is determined **302** in other embodiments by scanning the printed barcode in the same manner as described above with respect to barcode scanner **116**. In particular, illumination is emitted toward the printed barcode and the reflected illumination signal is detected and decoded to determine the barcode data of the printed barcode. In this regard, the BRD **106**, smartphone **104**A or desktop computer **104**B may include a light source and light detector for scanning the printed barcode to determine the barcode data.

[0083] At **304**, the barcode data of the printed barcode determined by act **302** is communicated to the clearinghouse **112** including database **114**. Additionally, at **304** a unique identifier is communicated to the clearinghouse **112**. The unique identifier may uniquely identify a particular user and/or a particular device, such as the BRD **106**, smartphone **104**A, desktop computer **104**B, or other communication device performing the communication with the clearinghouse.

[0084] In response to receiving the barcode data and unique identifier, the clearinghouse **112** determines **306** whether a user account for the particular user or device already exists in the barcode database **114** or other database. If a user account does not already exist, a user account is created and stored **308** in the barcode database **114** or other database, the user account including the unique ID for the user/device. The user account created by act **308** can be used to track user behavior with respect to barcodes that are associated with the particular user or device.

[0085] If a user account already exists and/or after creating a user account, at **310** the clearinghouse **112** creates new barcode data that includes (1) the originating barcode data of the printed barcode and (2) a unique signature associated with the particular user or particular device. Alternately or additionally, the act **310** may be performed by the barcode issuer **110** in communication with the clearinghouse **112**.

[0086] At **312**, the new barcode data is associated with the user account and/or stored in the barcode database **114**. Associating **312** the new barcode data with the user account may include storing the new barcode data and/or an identifier of the new barcode data in the user account. By associating the new barcode data with the user account, the clearinghouse **112** can track the behavior of the particular user or device with respect to the corresponding new barcode. Alternately or additionally, the inclusion of the unique signature in the new barcode data at act **310** may suffice to associate the new barcode data with the particular user or particular device in which case act **312** can be omitted from the method **300**.

[0087] At **314**, the clearinghouse sends the new barcode data to the BRD **106**, smartphone **104**A or desktop computer **104**B.

[0088] At **316**, the BRD **106**, smartphone **104**A or desktop computer **104**B receives the new barcode data.

[0089] At **318**, a new barcode corresponding to the new barcode data is caused to be displayed on the display **204** of BRD **106**. In embodiments in which some acts of the method **300** are performed by the BRD **106**, causing **318** the new barcode to be displayed on the display **204** includes rendering the new barcode on the display **204**.

[0090] In other embodiments in which some acts of the method **300** are performed by the smartphone **104**A (or desktop computer **104**B), causing **318** the new barcode to be displayed on the display **204** includes communicating the new data of the new barcode from the smartphone **104**A to the BRD **106** where the BRD **106** receives the new data of the new barcode and renders the new barcode on the display **204**. Optionally, the new data is communicated to the BRD **106** using a Bluetooth protocol, an 802.xx protocol, or other wireless protocol. Alternately, the new data is communicated to the BRD **106** using an audio signal, infrared ("IR") optical signal, visible optical signal, or other wireless means.

[0091] Alternately or additionally, the smartphone **104**A and BRD **106** may implement a public key encryption infrastructure ("PKI") in which the smartphone **104**A encrypts the new barcode data using a public key of the BRD **106** before communicating the encrypted new barcode data to the BRD **106**. After receiving the encrypted new barcode data, the BRD **106** decrypts the new barcode data using a complementary private key.

[0092] The method **300** of FIG. **3** can be practiced alone or in combination with one or more of the other methods and acts described herein.

[0093] FIG. **4** is a flowchart of an example method **400** for validating a scan of a barcode displayed on a barcode rendering device. The method **400** is executed in some embodiments by the BRD **106** and will be discussed in combination with FIGS. **1**-**2**B.

[0094] At **402**, a barcode is displayed on the display **204** of BRD **106**.

[0095] At **404**, a first signal is detected indicating that a scan of the barcode has been attempted by the barcode scanner **116**. In some embodiments, the first signal includes illumination emitted by the barcode scanner **116** that is incident on the display **204** and is detected by the light detector **208**. Alternately or additionally, the illumination has a predetermined optical spectrum of about 632.8 nanometers or 670 nanometers. The light detector **208** may be configured to only detect illumination having a predetermined spectrum. Alternately, the light detector **208** detects the amplitude of both the incident illumination from the barcode scanner **116** and ambient illumination; incoming measurements from the light detector **208** can then be compared by the BRD **106** to determine when illumination from the barcode scanner **116** is incident on the display **204**.

[0096] At **406**, a second signal is detected indicating acceptance of the attempted scan by POS terminal **118**. In some embodiments, the second signal includes a beep, tone, or other noise made by the POS terminal **118** when a scan is accepted by the POS terminal **118**. POS terminals **118** are often configured to emit such an audible noise in response to successfully scanning a barcode so that an individual operating the barcode scanner **116** and/or POS terminal **118** knows when a barcode scan has been accepted such that the individual can scan the next item. The individual may be a store clerk, a patron, or the like, and may be referred to hereinafter as a "scanning individual."

[0097] At **408**, based on the detection of the first and second signals, the BRD **106** determines that the attempted scan of the displayed barcode by the barcode scanner **116** was successful.

[0098] Other acts and operations not shown in FIG. **4** can be included in the method **400**. As an example, in some embodiments, the BRD **106** clears the barcode from the display **204** in response to determining **408** that the attempted scan was successful and displays a different barcode on the display.

[0099] As another example, the BRD **106** in some embodiments calculates a time delay between detecting the first signal and detecting the second signal and associates the time delay with a particular merchant **108** or location. Optionally, the associated time delay is stored in a database including a plurality of time delays associated with a plurality of merchants or locations. Alternately or additionally, specific location information determined by the GPS module **212** is included with the associated time delay. The associated time delays and related location information can be queried later to confirm whether a subsequent scan occurred at a POS terminal **118** of a merchant location **108** versus at a price-checking scanner on the merchant location **108** that is not connected to a POS terminal.

[0100] As yet another example, the BRD **106** in some embodiments tracks a number of times the barcode is successfully scanned and clears the barcode from the display **204** after the number of times reaches a maximum number of times associated with the displayed barcode. In some embodiments, the maximum number of times is specified by the barcode itself. Optionally, in response to the BRD **106** clearing the barcode from the display **204**, the BRD **106** presents a message to a user of the BRD **106** indicating that the displayed barcode was redeemed a maximum allowed number of times.

[0101] The method **400** of FIG. **4** can be practiced alone or in combination with one or more of the other methods and acts described herein. For example, the method **400** of FIG. **4** can be combined with the method **300** of FIG. **3** to validate the scan of a unique barcode generated from a printed barcode according to the method **300** of FIG. **3**.

[0102] FIG. **5** is a flowchart of an example method **500** for preventing barcodes from being copied. The method **500** is executed in some embodiments by the BRD **106**, barcode issuer **110**, merchant **108** and clearinghouse **112**.

[0103] At **502**, the barcode issuer **110** generates unique barcode data corresponding to a unique barcode representing a coupon, gift card, etc.

[0104] At **504**, the barcode issuer **110** sends the barcode data to a single BRD **106** via network **102**, either directly to the BRD **106** or through a communication device **104**. The barcode issuer **110** also sends the barcode data to the clearinghouse **112**. Sending the barcode data to the BRD **106** can be made secure by implementing a secure communication protocol, such as https. Additionally, the unique barcode data is unicast to the BRD **106**. In particular, the unique barcode data is only sent to the single BRD **106**.

[0105] In comparison, conventional systems typically multicast the same coupon (including the same barcode) to a large number of consumers such that the coupon/barcode received by each consumer is generic. Because the coupon/barcode is generic, it is a trivial matter for a consumer to copy the coupon/barcode and redeem it more times than may otherwise be allowed by the barcode issuer **110**.

[0106] At **506**, the clearinghouse **112** receives the barcode data and at **508**, the clearinghouse **112** stores the barcode data in the database **114**.

[0107] At **510**, the BRD **106** receives the barcode data.

[0108] At **512**, the BRD **106** displays human-readable information corresponding to the barcode data on the display **204** of the BRD **106**. For instance, if the barcode data represents a coupon, the BRD **106** may display, for instance, the product to which the coupon applies, the maximum number of products to which the coupon can be applied, the rebate or discount amount of the coupon, a logo or other brand-related iconography identifying the product or manufacturer of the product, or the like.

[0109] At **514**, the display **204** of the BRD **106** is presented to the merchant **108**.

[0110] At **516**, the barcode scanner **116** is used to scan the display **204** of the BRD **106**.

[0111] At **518**, the BRD **106** detects the scan of the display **204** by the barcode scanner **116**. In some embodiments, act **518** includes the light detector **208** detecting the illumination emitted by the barcode scanner **116** that is incident on the display **204** of the BRD **106**.

[0112] At **520**, and in response to detecting the scan of the display **204**, the BRD **106** displays a barcode corresponding to the barcode data for a predetermined duration. At the end of the predetermined duration, the BRD **106** may clear the barcode from the display **204** and display the human-readable information for the barcode once again.

[0113] In some embodiments, the predetermined duration is on the order of a second. More generally, the predetermined duration is selected to be sufficient for the barcode scanner **116** to read the displayed barcode but not much longer. Because the barcode is obscured during much of the scan by the barcode scanner **116**, the amount of time during which the barcode is exposed to being copied is even shorter than the predetermined duration during which the barcode is displayed on the BRD **106**. As such, opportunities to fraudulently copy the barcode are substantially eliminated.

[0114] At **522**, the merchant determines whether the scan was successful. If the scan of the barcode is not successful, the method **500** repeats acts **516**, **518**, and **520** in an attempt to successfully scan the barcode. Optionally, the BRD **106** is configured to increase the predetermined duration during which the barcode is displayed **520** with each successive attempt to scan the same barcode. In some embodiments, acts **516**, **518**, **520** and **522** are repeated until the barcode is successfully scanned. Alternately or additionally, the method **500** aborts after a predetermined number of unsuccessful scans of the barcode.

[0115] In some embodiments, rather than repeatedly displaying the same barcode during re-scan attempts after a previous scan attempt is unsuccessful, the BRD **106** renders a different unique barcode during each re-scan attempt. In this regard, the BRD **106** may receive (e.g., at act **510**) from the barcode issuer **110** unique barcode data representing a plurality of different unique barcodes all corresponding to the same coupon or other instrument. By "rolling" through the different unique barcodes during re-scan attempts, vulnerability to copy attacks can be substantially eliminated.

[0116] After the scan of the barcode is successfully completed and the barcode data represented by the barcode is extracted by the barcode scanner **116**, the method **500** proceeds to act **524** where the POS terminal **118** sends a request to the clearinghouse **112** to verify the validity of the barcode using the extracted barcode data.

[0117] At **526**, the clearinghouse **112** receives the extracted barcode data and queries the database **114** to determine

whether the extracted barcode data represents a valid barcode. A barcode is deemed valid if, for instance, its corresponding barcode data exists in the database **114**. Alternately or additionally, the clearinghouse **112** may determine whether the extracted barcode data represents an expired barcode. A barcode is deemed expired if, for instance, it has been redeemed a predetermined maximum number of times and/or if the current date is after an expiration date associated with the barcode.

[0118] At **528**, the clearinghouse **112** returns a response to the merchant **108** indicating whether the barcode data represents a valid or an invalid barcode and/or whether the barcode data represents an expired or unexpired barcode. Alternately or additionally, in embodiments where the extracted barcode data uniquely identifies a particular person or BRD **106**, the clearinghouse **112** may additionally update a user account associated with the particular person or BRD **106** to track that the barcode was redeemed by the particular person or BRD **106**.

[0119] Alternately or additionally, where the clearinghouse **112** determines that the barcode is valid, the clearinghouse **112** may update a record associated with the barcode to indicate that the barcode has been redeemed. Because the barcode is a unique barcode as described above, subsequent attempts to verify the validity of the barcode in response to the barcode being presented to a merchant **108** will determine, based on the updated record, the number of times the barcode has been redeemed and whether additional redemption of the barcode is permitted. Accordingly, even if a unique barcode displayed on the BRD **106** is fraudulently copied and presented to a merchant, the uniqueness of the barcode prevents the barcode from being redeemed where the barcode has already been redeemed the maximum number of times.

[0120] At **530**, and based on the response received from the clearinghouse **112**, the merchant **108** approves or denies use of the coupon, gift card, or other instrument represented by the barcode.

[0121] The method **500** of FIG. **5** can be practiced alone or in combination with one or more of the other methods and acts described herein. For example, the method **500** of FIG. **5** can be combined with some or all of the acts disclosed with respect to the method **400** of FIG. **4** to validate the scan of a barcode that is displayed on the BRD **106** for a predetermined duration. In response to validating the scan, the BRD **106** may then clear the human-readable information corresponding to the barcode and display human-readable information corresponding to a different barcode and repeat various acts of the method **500** to scan the different barcode.

[0122] FIG. **6** is a flowchart of an example method **600** for using location information to limit the presentation of information on the BRD **106**. The method **600** is executed in some embodiments by the BRD **106**.

[0123] At **602**, the BRD **106** detects a current location of the BRD **106**. In some embodiments, the current location of the BRD **106** is detected by the GPS module **212**. Alternately or additionally, the BRD **106** detects its current location in conjunction with a cellular communication network using cell tower triangulation or other location-detecting process (es). Alternately or additionally, the BRD **106** detects its current location by detecting the proximity of a particular 802.*xx* (e.g., Wi-Fi) network. Any other suitable location detection scheme now known or later developed can be implemented by the BRD **106** to determine its current location.

[0124] At **604**, the BRD **106** filters the information, such as barcodes, that is available for display on the display **204** of the BRD **106** based on the current location of the BRD **106** to limit such information to location-relevant information. For instance, if the BRD **106** determines that it is at a particular merchant **108** such as a supermarket, the act of filtering **604** may limit the information available for display on the BRD **106** to, e.g., coupon barcodes, a supermarket-specific rewards card, or the like. In some embodiments, the UI **203** of BRD **106** can then be navigated by a user to select information from among the location-relevant information.

[0125] The method **600** of FIG. **6** can be practiced alone or in combination with one or more of the other methods and acts described herein.

[0126] FIG. **7** is a flowchart of an example method **700** for bonding the BRD **106** with smartphone **104**A to exchange data between the BRD **106** and smartphone **104**A. The method **700** is executed in some embodiments by a user, the BRD **106** and the smartphone **104**A.

[0127] At **702**, the user taps the BRD **106** and smartphone **104**A together. In some embodiments, the tap is a single tap while in other embodiments the tap is a double-tap. More generally, the tap can be any detectable motion that has been previously configured as an indication that a user desires the BRD **106** and smartphone **104**A to bind together.

[0128] At **704**, the smartphone **104**A detects the tap using, e.g., an accelerometer.

[0129] At **706**, the smartphone **104**A emits a first audio signal indicating that it is ready to bind with the BRD **106** and communicate information to the BRD **106**.

[0130] At **708**, the BRD **106** detects the tap using, e.g., an accelerometer.

[0131] At **710**, the BRD **106** detects the first audio signal emitted by the smartphone **104**A using, e.g., the sound detector **210**.

[0132] At **712**, the BRD **106** binds with the smartphone **104**A in response to detecting both the tap and the first audio signal.

[0133] At **714**, the BRD **106** provides an indication, such as a second audio signal, indicating to the smartphone **104**A that the BRD **106** has bound with the smartphone and is ready to receive information from the smartphone **104**A.

[0134] At **716**, the smartphone **104**A communicates information, such as barcode data, to the bound BRD **106** via a third audio signal in response to detecting that the BRD **106** has bound to the smartphone **104**A.

[0135] At **718**, the BRD **106** receives the information transmitted via the third audio signal from the smartphone **104**A.

[0136] At **720**, the BRD **106** displays some or all of the received information on the display **204**.

[0137] The method **700** of FIG. **7** can be practiced alone or in combination with one or more of the other methods and acts described herein.

[0138] FIG. **8** is a flowchart of an example method **800** for operating a system including a plurality of BRDs **106**, a plurality of smartphones **104**A, a clearinghouse **112** including a database **114** storing user- or device-specific barcode-redemption activity, and one or more coupon issuers **110**.

[0139] The method **800** begins at **802** by distributing a plurality of BRDs **106** to consumers. In some embodiments the BRDs **106** are provided free of charge to consumers while in other embodiments the BRDs **106** are provided to consumers for a price. Alternately or additionally, the BRDs **106** are initially configured at least as elite status cards or member

loyalty cards and are distributed by a particular merchant **108** for use with the merchant. Optionally, the BRDs **106** may come pre-loaded with incentives such as percentages off of purchases, coupons, etc. in connection with use of the BRDs **106** as elite status cards or member loyalty cards. The BRDs **106** are configured to display barcodes representing the elite status cards, member loyalty cards, percentages off of purchases, and coupons, etc.

[0140] At **804**, the BRDs **106** are used to present barcodes to merchants **108** and other entities with barcode scanners **116**. The merchants **108** scan the barcodes to redeem coupons, gift cards, or the like and/or to access/update rewards cards, elite status cards, member loyalty cards, etc.

[0141] At **806**, data is collected regarding barcode usage by the plurality of BRDs **106** in the manner already described above in association with, e.g., FIGS. **3-5**. In some embodiments, the collected data is stored in user- or device-specific accounts in the database **114**.

[0142] At **808**, some or all of the collected data is provided to an interested entity, such as a barcode issuer **110**. The collected data may allow the barcode issuer **110** to distribute targeted coupons to specific users or BRDs **106**, the coupons being targeted based on an analysis of the collected data. Optionally, the barcode issuer **110** is charged a fee for the collected data.

[0143] At **810**, a software development kit ("SDK") is made available that permits smartphones **104**A and BRDs **106** to render, based on barcode data received from a barcode issuer **110** or other entity, barcodes and/or corresponding human-readable information. Alternately or additionally, the SDK allows for the creation of related applications that can be executed on the smartphones **104**A and/or BRDs **106**. Alternately or additionally, an application programming interface ("API") is provided that allows communication devices **104** to cause barcodes to be displayed on the display **204** of BRD **106** in, e.g., proxy mode or remote display mode.

[0144] The method **800** of FIG. **8** can be practiced alone or in combination with one or more of the other methods and acts described herein.

[0145] FIG. **9** is a flowchart of an example method **900** for presenting emergency information on the BRD **106** to medical personnel.

[0146] At **902**, the smartphone **104**A is configured, e.g., by a user, to send a signal to the BRD **106** indicating that an emergency call has been made in response to an emergency call being made on the smartphone **104**A to a particular emergency number, such as 911.

[0147] At **904**, the BRD **106** is configured, e.g., by the user, to automatically display certain information on the display **204** in response to receiving the signal from the smartphone **104**A indicating that an emergency call was made using the smartphone **104**A. This information may be referred to as "emergency information." The emergency information includes, in some embodiments, one or more of the user's name, address, blood type, emergency contact information, allergies, medications the user is taking, or the like. The BRD **106**A may be configured to automatically display the information in a human-readable format or in a machine-readable format such as a barcode. Optionally, the emergency information is stored in the memory **202** of BRD **106**.

[0148] At **906**, the emergency information is encoded as barcode data to permit the information to be displayed as a barcode. The encoding **906** of the barcode data may be performed by the BRD **106**, smartphone **104**A, or another entity.

[0149] At **908**, an emergency call is made using the smartphone **104**A.

[0150] At **910**, the smartphone **104**A sends a signal to the BRD **106** indicating that an emergency call was made.

[0151] At **912**, the BRD **106** detects the signal from the smartphone.

[0152] At **914**, the BRD **106** displays the emergency information in a human-readable and/or machine readable format.

[0153] At **916**, medical personnel, such as first responders, that have arrived on the scene in response to the emergency call by the smartphone **104**A scan the machine-readable emergency information from the display **204** of the BRD **106** to determine information that may be relevant in treating the user.

[0154] The method **900** of FIG. **9** can be practiced alone or in combination with one or more of the other methods and acts described herein.

[0155] FIG. **10**A is a flowchart of an example method **1000** for presenting medical information on the BRD **106** to a medical service provider.

[0156] At **1002**, the BRD **106** is configured, e.g., by a user, to automatically display certain information on the display **204** in response to receiving an unlock code from a trusted third party, such as clearinghouse **112**. The information displayed in response to the unlock code may be referred to as "medical information." The medical information includes, in some embodiments, emergency information such as described above with respect to FIG. **9**, and/or other information relevant to treating the user, such as one or more medical card numbers, insurance providers, or the like. The BRD **106** can be configured to automatically display the medical information in a human-readable format or in a machine-readable format such as a barcode.

[0157] At **1004**, the medical information is encoded as barcode data to permit the information to be displayed as a barcode. The encoding **1004** of the barcode data may be performed by the BRD **106**, smartphone **104**A, or another entity.

[0158] At **1006**, the trusted third party receives a request from a medical service provider to send an unlock code to the BRD **106**.

[0159] At **1008**, the trusted third party verifies the identity of the medical service provider.

[0160] At **1010**, the trusted third party sends the unlock code to the BRD **106**.

[0161] At **1012**, the BRD **106** receives the unlock code from the trusted third party.

[0162] At **1014**, the BRD **106** displays the medical information in a human-readable and/or machine readable format.

[0163] At **1016**, a scan of machine-readable medical information presented on the display **204** of BRD **106** is performed to determine information that may be relevant in treating the user. In some embodiments, a medical service provider uses a barcode scanner or other suitable device to scan the display **204** of BRD **106**.

[0164] The method **1000** of FIG. **10**A can be practiced alone or in combination with one or more of the other methods and acts described herein.

[0165] FIG. **10**B is a flowchart of an example method **1050** for presenting encrypted medical information on the BRD **106** to a medical service provider.

[0166] At **1052**, the BRD **106** is configured, e.g., by a user, to display certain encrypted information on the display **204** in response to receiving a predetermined input. The predeter-

mined input may include a medical provider navigating a menu of the BRD **106** to access the encrypted information, or other predetermined input. The encrypted information displayed in response to the predetermined input may be referred to as "encrypted medical information." The encrypted medical information includes, in some embodiments, medical information such as described above with respect to FIG. **10**A that has been encrypted using an encryption key that is complementary to a decryption key of a trusted third party, such as clearinghouse **112**. For example, the encryption key may be a public key of the trusted third party and the decryption key may be a corresponding private key of the trusted third party. The BRD **106** can be configured to display the encrypted medical information in a machine-readable format such as a barcode.

[0167] At **1054**, the encrypted medical information is encoded as barcode data to permit the information to be displayed as a barcode. The encoding **1054** of the barcode data may be performed by the BRD **106**, smartphone **104**A, or another entity.

[0168] At **1056**, the BRD **106** receives the predetermined input that triggers display of the encrypted medical information.

[0169] At **1058**, the BRD **106** displays the encrypted medical information in a machine readable format such as a barcode.

[0170] At **1060**, a scan of machine-readable medical information presented on the display **204** of BRD **106** is performed by the medical service provider to obtain encrypted medical information that may be relevant in treating the user. In some embodiments, a medical service provider uses a barcode scanner or other suitable device to scan the display **204** of BRD **106**.

[0171] At **1062**, the medical service provider forwards the encrypted medical information and credentials identifying the medical service provider to the trusted third party. In some embodiments, the barcode scanner used by the medical service provider is a network-enabled device or is coupled to a network-enabled device that sends the encrypted medical information and credentials to the trusted third party.

[0172] At **1064**, the trusted third party verifies the identity of the medical service provider based on the credentials.

[0173] At **1066**, the trusted third party decrypts the encrypted medial information using the decryption key of the trusted third party.

[0174] At **1068**, the trusted third party re-encrypts the medical information using an encryption key that is complementary to a decryption key of the medical service provider. For example, the encryption key may be a public key of the medical service provider and the decryption key may be a corresponding private key of the medical service provider.

[0175] At **1070**, the trusted third party sends the re-encrypted medical information to the medical service provider.

[0176] At **1072**, the medical service provider receives the re-encrypted medical information and decrypts it using the decryption key of the medical service provider to obtain decrypted medical information that may be relevant in treating the user. In some embodiments, act **1072** is performed by a network-enabled device and/or a computing device of the medical service provider

[0177] The method **1050** of FIG. **10**A can be practiced alone or in combination with one or more of the other methods and acts described herein.

[0178] The embodiments described herein may include the use of a special purpose or general-purpose computer including various computer hardware or software modules, as discussed in greater detail below.

[0179] Embodiments within the scope of the present invention also include computer-readable media for carrying or having computer-executable instructions or data structures stored thereon. Such computer-readable media can be any available media that can be accessed by a general purpose or special purpose computer. By way of example, and not limitation, such computer-readable media can comprise RAM, ROM, EEPROM, CD-ROM or other optical disk storage, magnetic disk storage or other magnetic storage devices, or any other tangible computer-readable medium which can be used to carry or store desired program code means in the form of computer-executable instructions or data structures and which can be accessed by a general purpose or special purpose computer. When information is transferred or provided over a network or another communications connection (either hardwired, wireless, or a combination of hardwired or wireless) to a computer, the computer properly views the connection as a computer-readable medium. Thus, any such connection is properly termed a computer-readable medium. Combinations of the above should also be included within the scope of computer-readable media.

[0180] Computer-executable instructions comprise, for example, instructions and data which cause a general purpose computer, special purpose computer, or special purpose processing device to perform a certain function or group of functions. Although the subject matter has been described in language specific to structural features and/or methodological acts, it is to be understood that the subject matter defined in the appended claims is not necessarily limited to the specific features or acts described above. Rather, the specific features and acts described above are disclosed as example forms of implementing the claims.

[0181] As used herein, the term "module" or "component" can refer to software objects or routines that execute on the computing system. The different components, modules, engines, and services described herein may be implemented as objects or processes that execute on the computing system (e.g., as separate threads). While the system and methods described herein are preferably implemented in software, implementations in hardware or a combination of software and hardware are also possible and contemplated. In this description, a "computing entity" may be any computing system as previously defined herein, or any module or combination of modulates running on a computing system.

[0182] The present invention may be embodied in other specific forms without departing from its spirit or essential characteristics. The described embodiments are to be considered in all respects only as illustrative and not restrictive. The scope of the invention is, therefore, indicated by the appended claims rather than by the foregoing description. All changes which come within the meaning and range of equivalency of the claims are to be embraced within their scope.

What is claimed is:

1. A barcode rendering device, comprising:

a communication interface configured to receive barcode data corresponding to a barcode in one of a plurality of barcode symbologies;

a reflective display configured to legitimately display barcodes in any of the plurality of barcode symbologies; and

a detector configured to detect illumination emitted by a barcode scanner and incident on the reflective display.

2. The barcode rendering device of claim **1**, wherein the detector comprises a first detector, the barcode rendering device further comprising a second detector configured to detect audio signals.

3. The barcode rendering device of claim **1**, wherein the reflective display includes a pixel array and a blank mask surrounding the pixel array, the blank mask having a color and reflectivity that are substantially similar to the color and reflectivity of pixels in the pixel array that represent spaces in a barcode displayed on the reflective display, the blank mask functioning as a quiet zone for one or more barcodes displayed on the reflective display.

4. The barcode rendering device of claim **3**, wherein a first integer multiple of a width of each pixel in one direction of the pixel array is within a first range of module widths of a first barcode symbology and a second integer multiple of the width of each pixel is within a second range of module widths of a second barcode symbology, the first range of module widths being different than the second range of module widths.

5. The barcode rendering device of claim **4**, wherein the first integer multiple of a width of each pixel is equal to about 10.4 mils, the second integer multiple of the width of each pixel is equal to about 7.8 mils, and the width of each pixel in one direction of the pixel array is about 2.6 mils.

6. The barcode rendering device of claim **3**, wherein the pixel array is a 480 by 320 pixel array, each of the pixels in one direction having a length substantially equal to 2.6 mils.

7. The barcode rendering device of claim **1**, further comprising a memory, the memory having stored thereon emergency information of a user and computer-executable instructions executable by the barcode rendering device to cause the barcode rendering device to automatically display the emergency information on the reflective display in response to determining that an emergency call was made using a communication device of the user.

8. The barcode rendering device of claim **1**, further comprising a memory, the memory having stored thereon medical information of a user and computer-executable instructions executable by the barcode rendering device to cause the barcode rendering device to automatically display the medical information on the reflective display in response to receiving an unlock code from a trusted third party, the trusted third party sending the unlock code to the barcode rendering device in response to receiving a request from a medical service provider attempting to provide medical services to the user.

9. The barcode rendering device of claim **1**, further comprising a memory, the memory having stored thereon medical information of a user that is encrypted by a public key of a trusted third party and computer-executable instructions executable by the barcode rendering device to cause the barcode rendering device to display the encrypted medical information on the reflective display in response to receiving predetermined input, wherein:

a medical service provider is configured to scan the display to obtain the encrypted medical information and send the encrypted medical information and credentials identifying the medical service provider to the trusted third party;

the trusted third party is configured to verify the identity of the medical service provider based on the credentials, decrypt the encrypted medical information using a corresponding private key of the trusted third party, re-encrypt the decrypted medical information using a public key of the medical service provider and send the re-encrypted medical information to the medical service provider; and

the medical service provider is further configured to decrypt the re-encrypted medical information using a corresponding private key of the medical service provider to obtain decrypted medical information of the user.

10. A method for redeeming a printed barcode, comprising:

determining barcode data of a printed barcode;

communicating, to a clearinghouse including a database storing barcode data of a plurality of barcodes, barcode data of the printed barcode and a unique identifier associated with a particular user or a particular device;

receiving new barcode data corresponding to a new barcode, the new barcode data including the barcode data of the printed barcode and a unique signature associated with the particular user or particular device; and

causing the new barcode to be displayed on a reflective display for scanning by a barcode reader.

11. The method of claim **10**, wherein the method is executed by a barcode rendering device and wherein causing the new barcode to be displayed on a reflective display includes rendering the new barcode on a reflective display of the barcode rendering device.

12. The method of claim **10**, wherein causing the new barcode to be displayed on a reflective display includes communicating the new barcode data to a barcode rendering device, the barcode rendering device including the reflective display.

13. The method of claim **12**, wherein communicating the new barcode data to a barcode rendering device includes communicating with the barcode rendering device using a Bluetooth protocol, an 802.xx protocol, or other wireless protocol.

14. The method of claim **12**, further comprising encrypting the new barcode data using a public encryption key of the barcode rendering device prior to communicating the new barcode data to the barcode rendering device, wherein the barcode rendering device is configured to decrypt the encrypted new barcode data using a corresponding private encryption key of the barcode rendering device.

15. The method of claim **12**, wherein communicating the new barcode data to a barcode rendering device includes communicating the new barcode data in an audio signal, an infrared optical signal, or a visible optical signal representative of the new barcode data.

16. The method of claim **12**, wherein the barcode rendering device functions as a proxy that receives the new barcode data and determines when and how to render the new barcode.

17. The method of claim **12**, wherein the barcode rendering device functions as a remote display that receives the new barcode data from a communication device, the communication device determining when and how to render the new barcode on the barcode rendering device.

18. The method of claim **10**, wherein the new barcode is a layered barcode including a plurality of separate barcodes configured to be rendered sequentially on the reflective display, the plurality of separate barcodes collectively representing the new barcode data.

19. The method of claim **10**, wherein the new barcode is rendered on the reflective display after and in response to

detecting illumination incident on the reflective display indicating that the reflective display is being scanned by a barcode scanner, the method further comprising clearing the new barcode from the reflective display after a predetermined duration, the predetermined duration beginning upon detecting the illumination.

20. The method of claim **19**, further comprising, prior to rendering the new barcode on the reflective display, displaying human-readable information corresponding to the new barcode on the reflective display.

21. The method of claim **20**, wherein the human-readable information includes one or more of: a product to which a coupon represented by the new barcode applies, a maximum number of products to which the coupon can be applied, a rebate or discount amount of the coupon, and a logo or other brand-related iconography identifying the product or manufacturer of the product.

22. A method of validating a scan of a barcode displayed on a barcode rendering device, the method comprising:

displaying a barcode on a display of the barcode rendering device;

detecting a first signal indicating an attempted scan of the displayed barcode by a barcode scanner;

detecting a second signal indicating acceptance of the attempted scan by a point of sale terminal to which the barcode scanner is communicatively coupled; and

based on the detection of the first and second signals, determining that the attempted scan of the displayed barcode by the barcode scanner was successful.

23. The method of claim **22**, further comprising:

in response to determining that the attempted scan was successful, clearing the barcode from the display; and

displaying a different barcode on the display.

24. The method of claim **22**, further comprising:

calculating a time delay between detecting the first signal and detecting the second signal; and

associating the time delay with a particular merchant or location.

25. The method of claim **24**, further comprising storing the associated time delay in a database including a plurality of time delays associated with a plurality of merchants or locations.

26. The method of claim **25**, further comprising determining a location of the barcode rendering device where the first and second signals are detected and storing location data representing the location with the associated time delay in the database.

27. The method of claim **25**, further comprising:

calculating a time delay between detecting a different first signal indicating an attempted scan of a different displayed barcode and a different second signal indicating acceptance of the attempted scan; and

querying the database based on the calculated time delay to identify a merchant or location where the barcode rendering device is being scanned.

28. The method of claim **22**, wherein detecting a first signal indicating an attempted scan of the displayed barcode comprises detecting illumination having a predetermined optical spectrum, the illumination being incident on the display of the barcode rendering device and emitted by the barcode scanner.

29. The method of claim **28**, wherein the predetermined optical spectrum includes wavelengths of about 632.8 nanometers or 670 nanometers.

30. The method of claim **22**, wherein detecting a second signal indicating acceptance of the attempted scan by a point of sale device comprises detecting an audio tone generated by the point of sale device in response to successfully scanning the displayed barcode.

31. The method of claim **22**, further comprising:

tracking a number of times the displayed barcode is successfully scanned; and

clearing the displayed barcode from the display after the number of times reaches a maximum number of times associated with the displayed barcode.

32. The method of claim **31**, further comprising presenting a message to a user of the barcode rendering device indicating that the displayed barcode has been redeemed a maximum allowed number of times.

33. The method of claim **22**, further comprising determining a location of the barcode rendering device where the first and second signals are detected, wherein determining that the attempted scan of the displayed barcode by the barcode scanner was successful is also based on the determined location.

* * * * *