US 20100156676A1

(19) United States

(12) Patent Application Publication

Mooring et al.

(10) Pub. No.: US 2010/0156676 A1

(43) Pub. Date: Jun. 24, 2010

(54) GESTURE-BASED USER INTERFACE FOR A WEARABLE PORTABLE DEVICE

(75) Inventors: **David J. Mooring**, Los Altos Hills, CA (US); **Alissa M. Fitzgerald**, Menlo Park, CA (US)

Correspondence Address:
Convergent Law Group LLP
P.O. BOX 1329
MOUNTAIN VIEW, CA 94042 (US)

(73) Assignee: **Pillar Ventures, LLC**, Los Altos, CA (US)

(21) Appl. No.: **12/341,631**

(22) Filed: **Dec. 22, 2008**

Publication Classification

(51) **Int. Cl.**
H03K 17/94 (2006.01)

(52) **U.S. Cl.** **341/20**

(57) **ABSTRACT**

Methods and systems for providing a gesture-based user interface for a wearable portable device are described. A gesture including a movement of the wearable portable device is received, and at least one character associated with the gesture is identified and displayed on the wearable portable device, thereby allowing entry of characters on the user interface of the wearable portable device using the gestures.

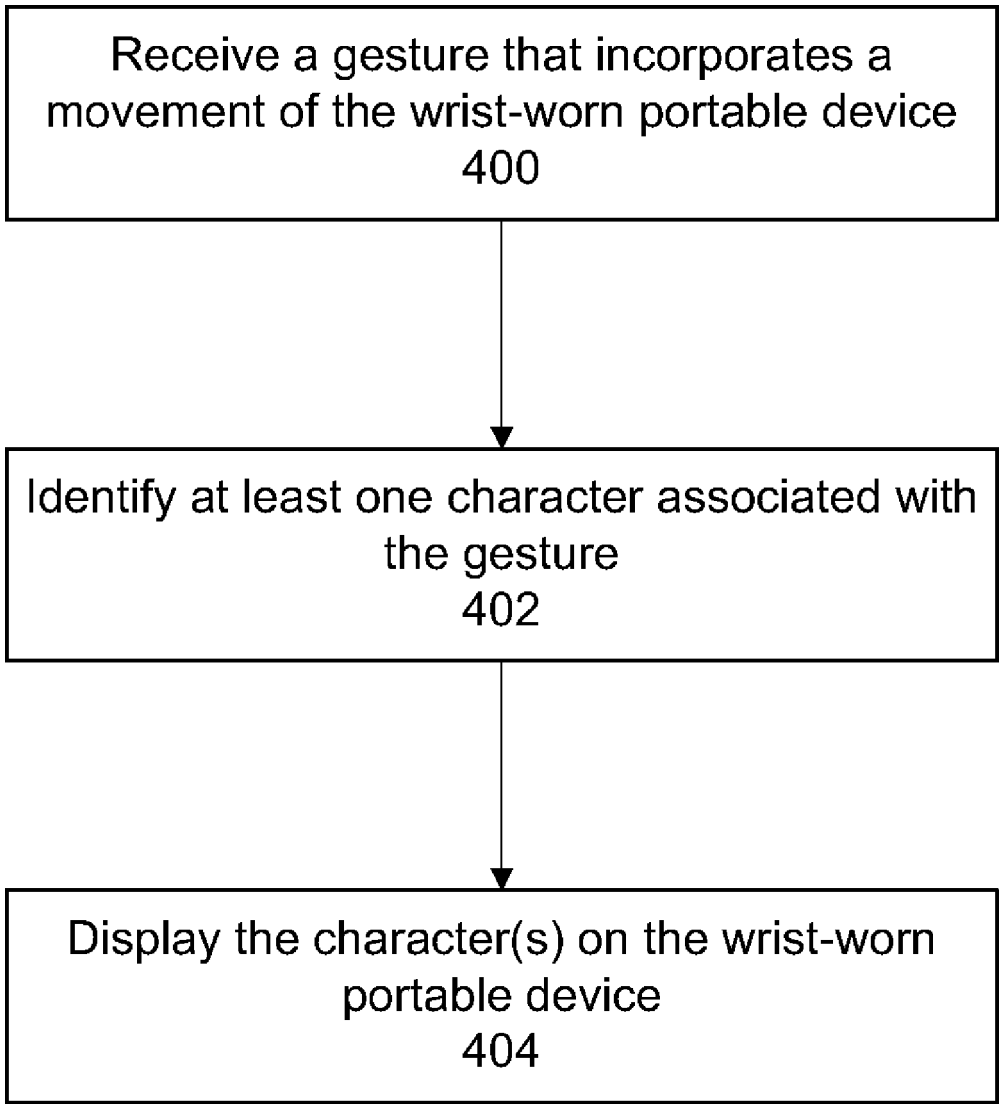

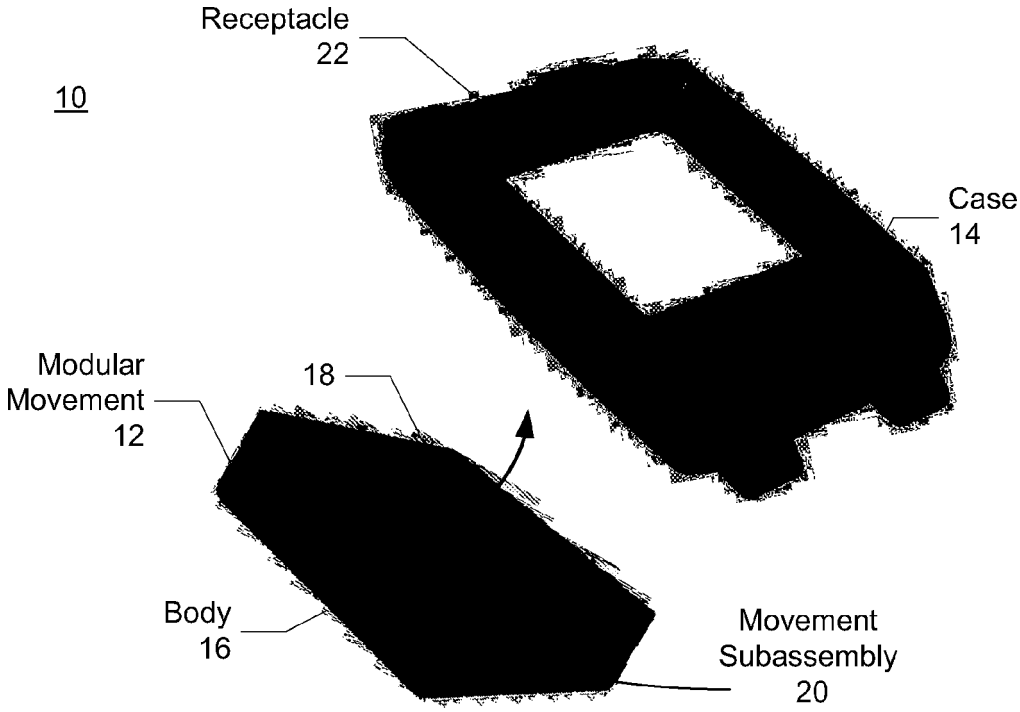
Receptacle
22
10
Case
14
Modular
Movement
12
18
Body
16
Movement
Subassembly
20

FIG. 1A

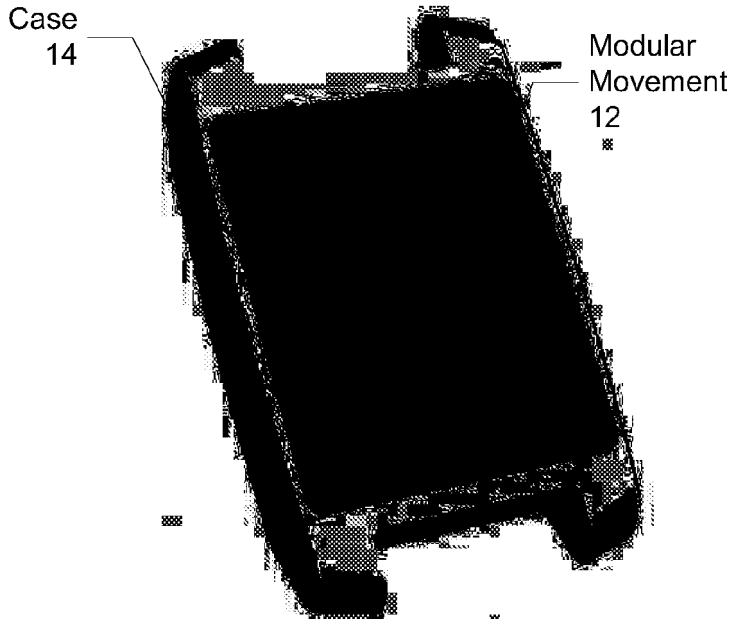
Case
14
Modular
Movement
12

FIG. 1B

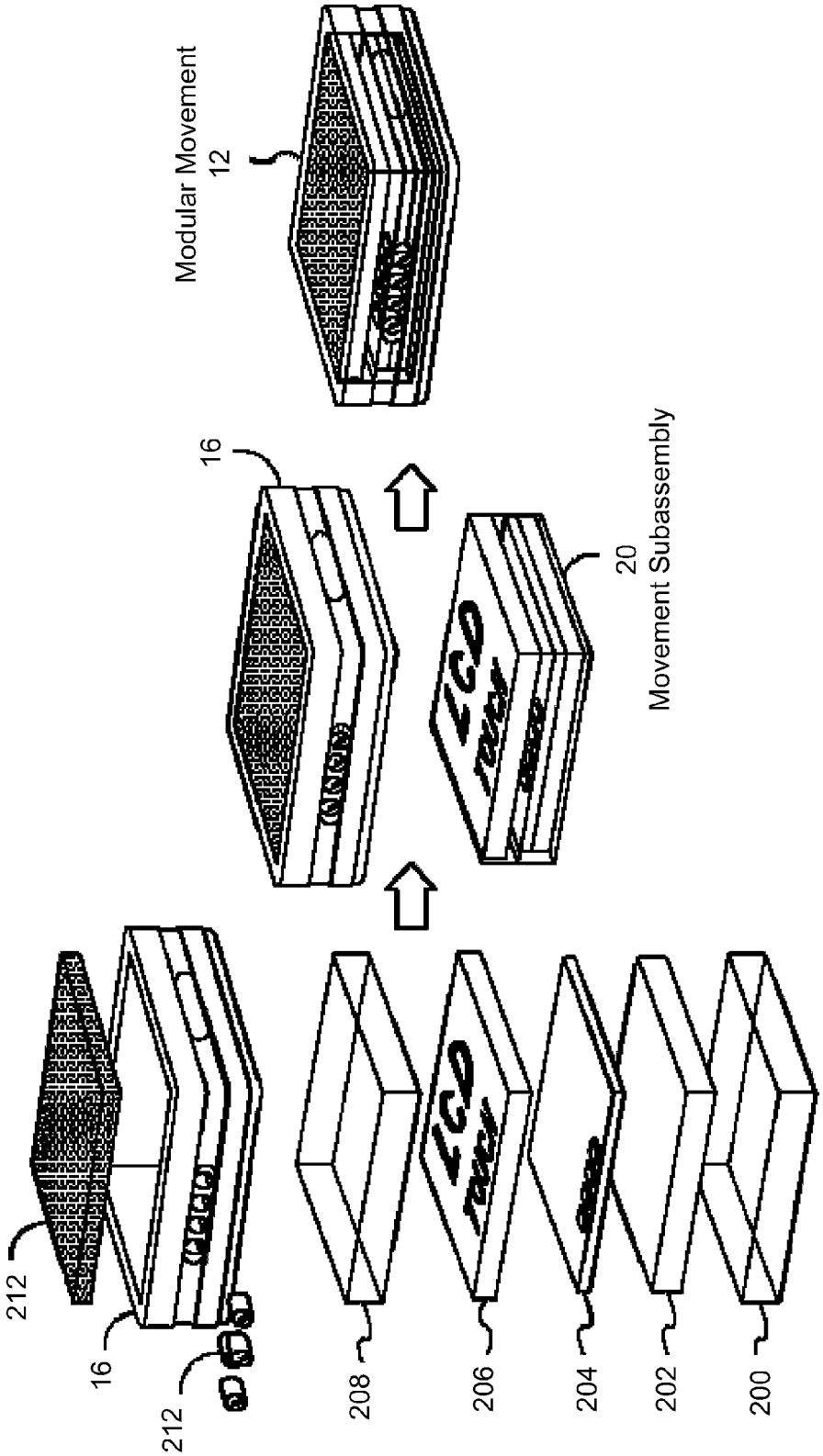
Modular Movement
12
16
20
Movement Subassembly
212
16
212
208
206
204
202
200

FIG. 2

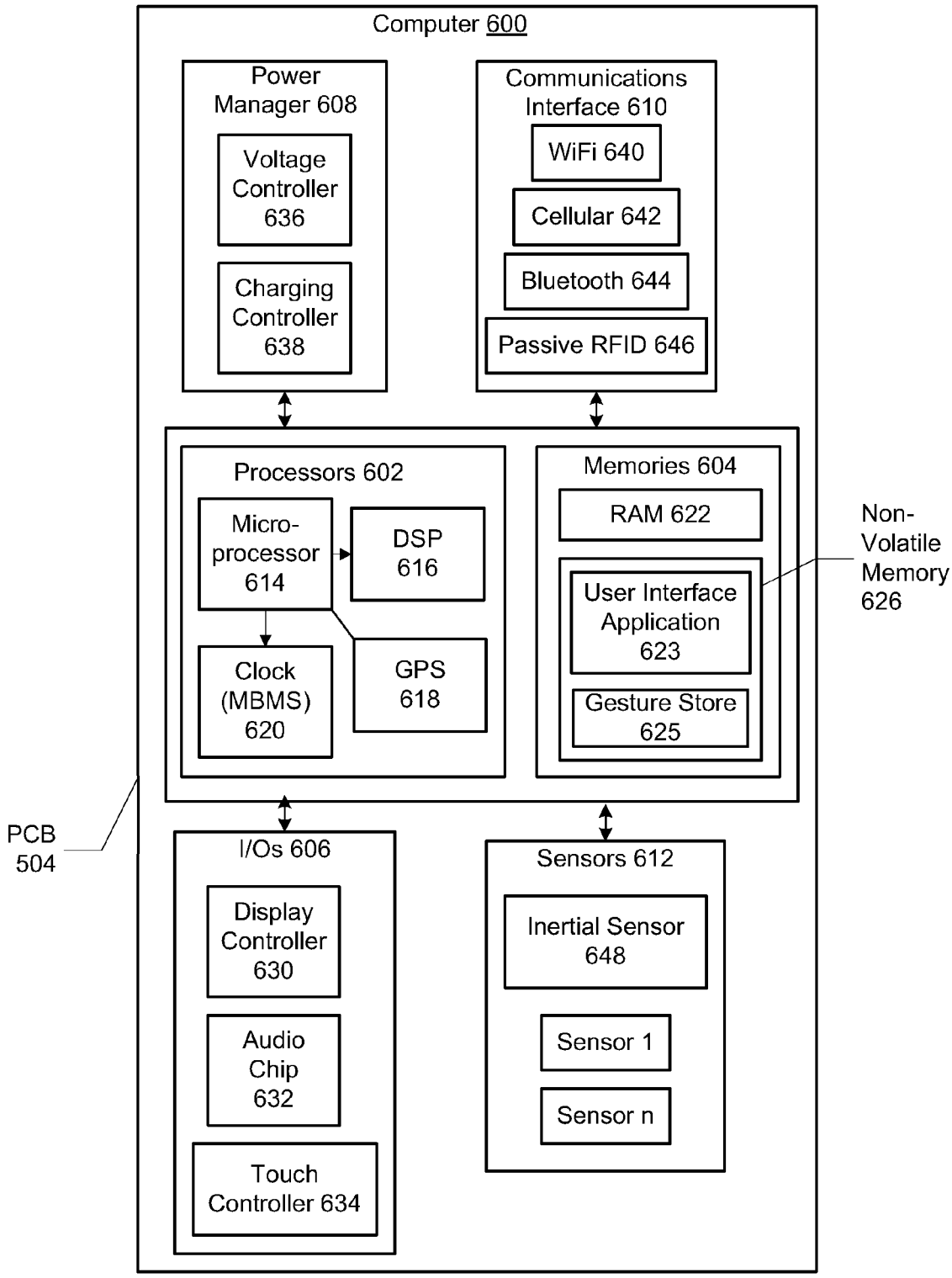
Computer 600
Power Manager 608
Voltage Controller 636
Charging Controller 638
Communications Interface 610
WiFi 640
Cellular 642
Bluetooth 644
Passive RFID 646
Processors 602
Micro-processor 614
DSP 616
Clock (MBMS) 620
GPS 618
Memories 604
RAM 622
User Interface Application 623
Gesture Store 625
Non-Volatile Memory 626
PCB 504
I/Os 606
Display Controller 630
Audio Chip 632
Touch Controller 634
Sensors 612
Inertial Sensor 648
Sensor 1
Sensor n

FIG. 3

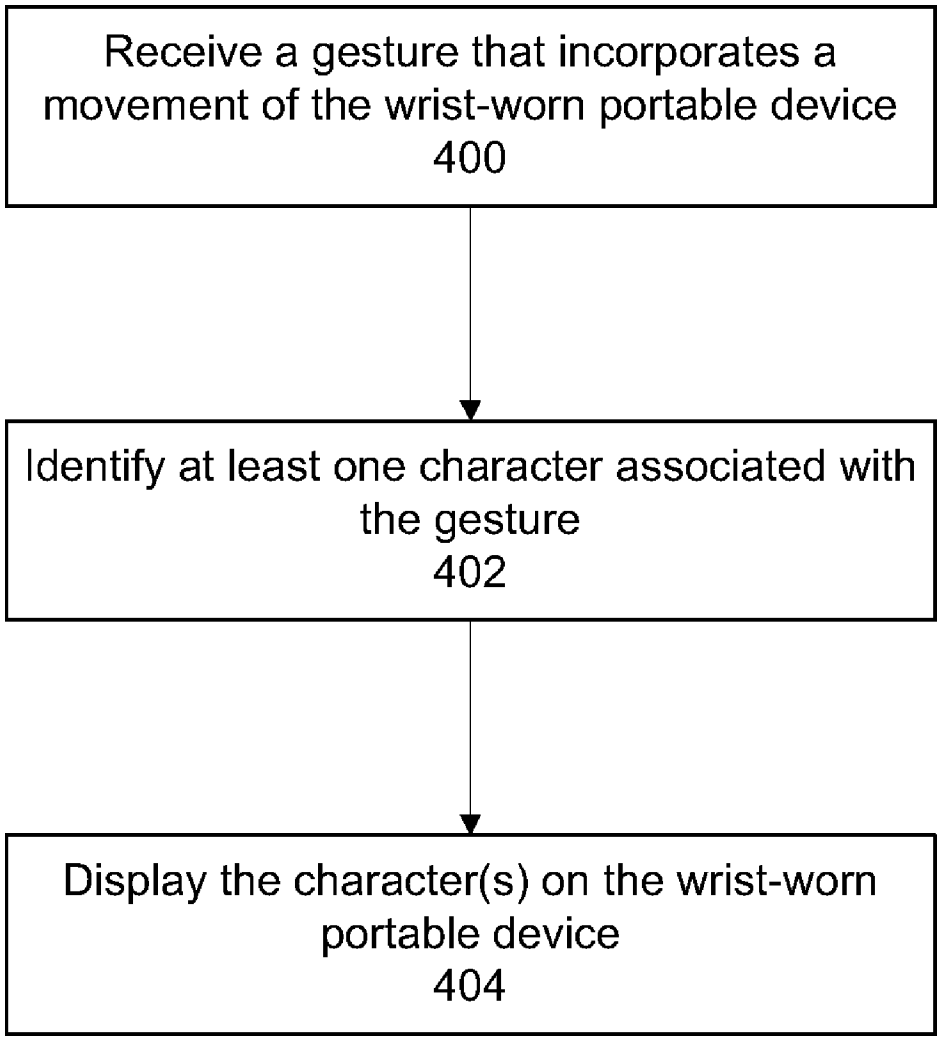
Receive a gesture that incorporates a movement of the wrist-worn portable device
400
Identify at least one character associated with the gesture
402
Display the character(s) on the wrist-worn portable device
404

FIG. 4

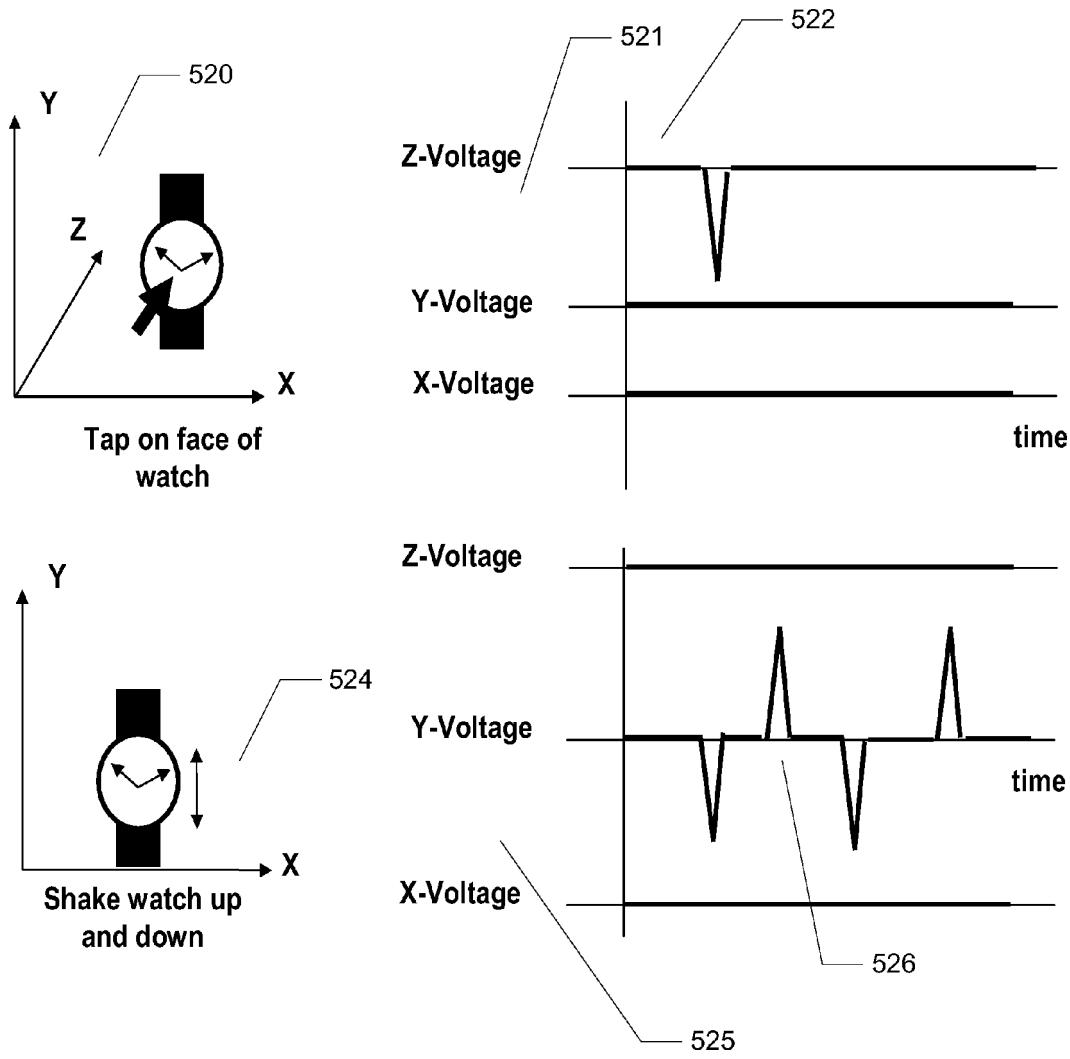
520
Y
Z
X
Tap on face of watch
521
522
Z-Voltage
Y-Voltage
X-Voltage
time
Y
X
524
Shake watch up and down
Z-Voltage
Y-Voltage
time
X-Voltage
526
525

FIG. 5

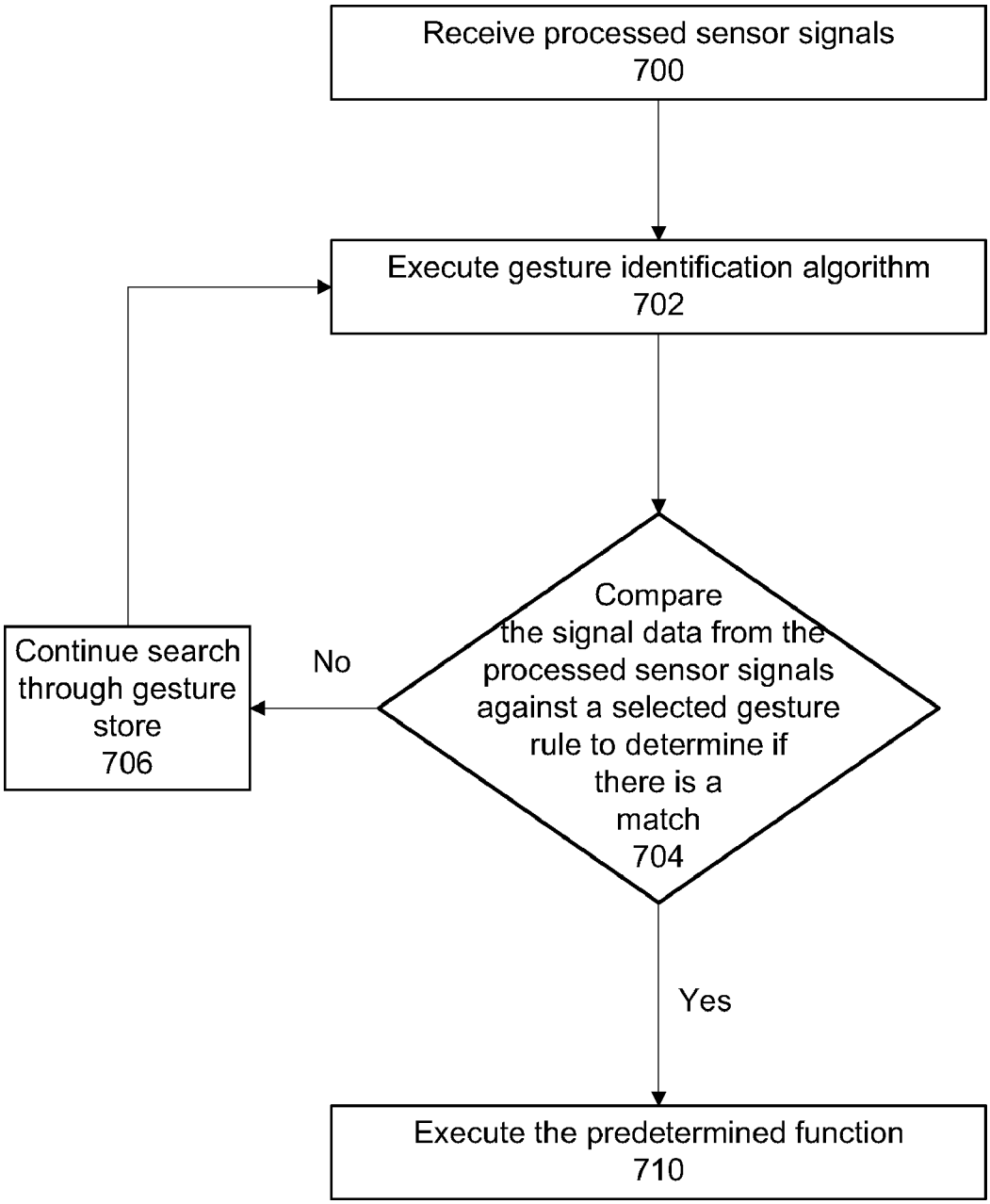
Receive processed sensor signals
700
Execute gesture identification algorithm
702
Compare the signal data from the processed sensor signals against a selected gesture rule to determine if there is a match
704
No
Continue search through gesture store
706
Yes
Execute the predetermined function
710

FIG. 6

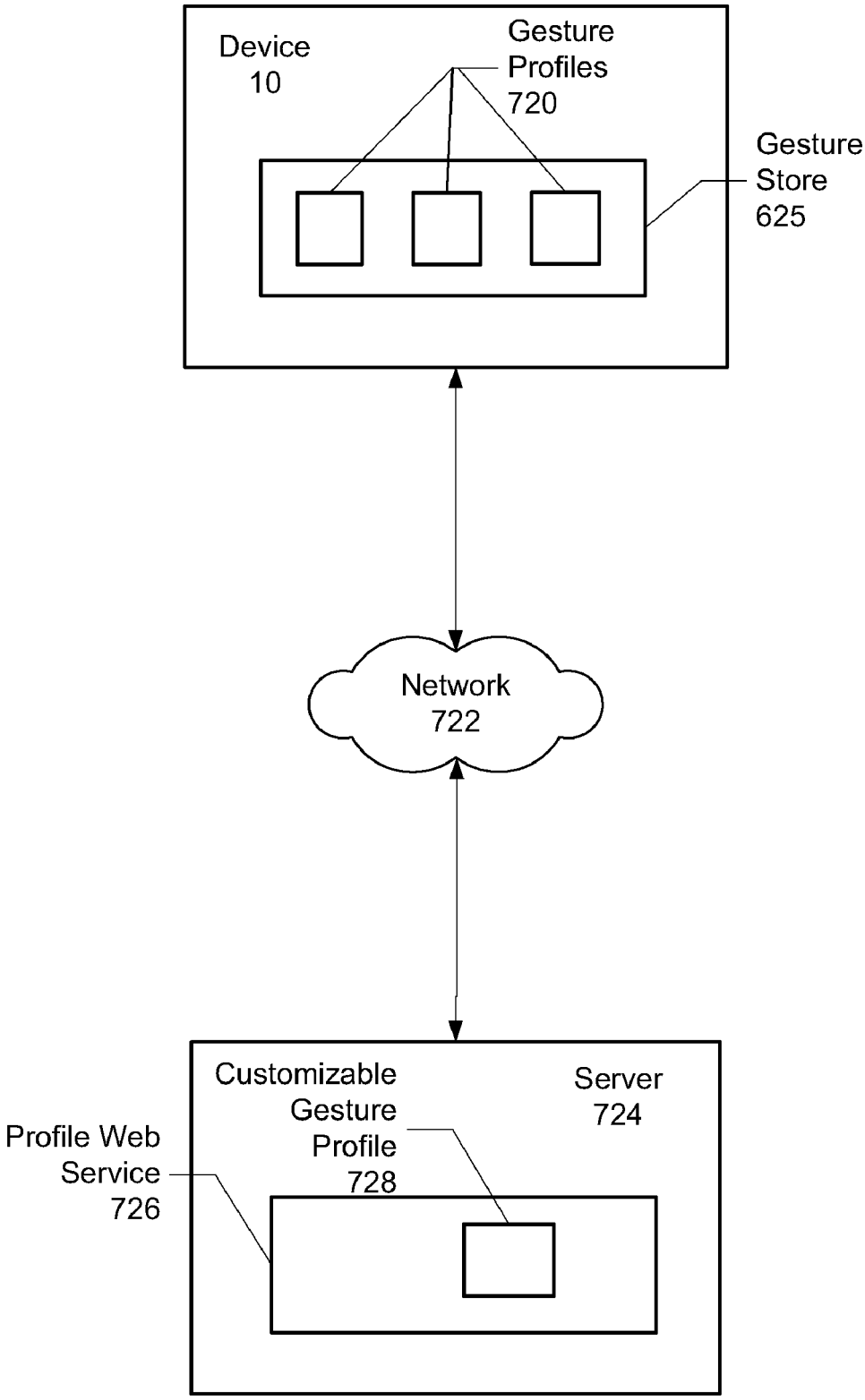
Device
10
Gesture
Profiles
720
Gesture
Store
625
Network
722
Customizable
Gesture
Profile
728
Server
724
Profile Web
Service
726

FIG. 7

GESTURE-BASED USER INTERFACE FOR A WEARABLE PORTABLE DEVICE

BACKGROUND OF THE INVENTION

[0001] Wearable devices, such as watches or other wrist-worn devices, are by their nature relatively small in size, and may be less than 40 mm in diameter. An electronic wearable portable device with multiple functions such as data display, email, text messaging, and wireless communication requires a practical means to interact intelligently with the device to input data, scroll through software menus, etc. Due to the form factor of the device, a keyboard or other button-based user interface integrated with the wearable portable device is neither practical nor aesthetically pleasing.

BRIEF SUMMARY OF THE INVENTION

[0002] Methods and systems for providing a gesture-based user interface for a wearable portable device are described. A gesture including a movement of the wearable portable device is received, and at least one character associated with the gesture is identified and displayed on the wearable portable device.

BRIEF DESCRIPTION OF SEVERAL VIEWS OF THE DRAWINGS

[0003] The drawings illustrate the design and utility of embodiments of the invention, in which similar elements are referred to by common reference numerals. In order to better appreciate the embodiments, reference should be made to the accompanying drawings that illustrate these embodiments. However, the drawings depict only some embodiments of the invention, and should not be taken as limiting its scope. With this caveat, embodiments of the invention will be described and explained with additional specificity and detail through the use of the accompanying drawings in which:

[0004] FIGS. **1**A-**1**B are block diagrams illustrating exemplary embodiments of a wearable portable device that provides a gesture-based user interface.

[0005] FIG. **2** is a diagram of an exploded view of the electronic device and components thereof when implemented as a computer-based electronic modular movement according to one exemplary embodiment.

[0006] FIG. **3** is a block diagram illustrating computer components on a PCB comprising the wearable portable device that provides a gesture-based user interface according to an exemplary embodiment.

[0007] FIG. **4** illustrates an exemplary embodiment of a process for providing a gesture-based user interface for a wearable portable device.

[0008] FIG. **5** illustrates exemplary embodiments of gestures and corresponding signals generated by an inertial sensor in response to the gestures.

[0009] FIG. **6** illustrates an exemplary embodiment of a process for identifying a gesture.

[0010] FIG. **7** is a diagram illustrating communication between an exemplary wearable portable electronic device and an exemplary profile web service including at least one customizable gesture profile for the wearable portable electronic device.

DETAILED DESCRIPTION OF THE INVENTION

[0011] The present invention relates to providing a gesture-based user interface for a wearable portable device. The following description is presented to enable one of ordinary skill in the art to make and use the invention and is provided in the context of a patent application and its requirements. Various modifications to the embodiments and the generic principles and features described herein can be made. Thus, the present invention is not intended to be limited to the embodiments shown, but is to be accorded the widest scope consistent with the principles and features described herein.

[0012] In the following description, for purposes of explanation, numerous details are set forth in order to provide a thorough understanding of various embodiments. It is important to note that the invention can be practiced without all of these details. Reference in this specification to "one embodiment" or "an embodiment" means that a particular feature, structure, or characteristic described in connection with the embodiment is included in at least one embodiment of the invention. The appearances of the phrase "in one embodiment" in various places in the specification are not necessarily all referring to the same embodiment, nor are separate or alternative embodiments mutually exclusive of other embodiments. Moreover, various features are described which may be exhibited by some embodiments and not by others. Similarly, various requirements are described which may be requirements for some embodiments but not other embodiments.

[0013] The exemplary embodiment provides methods and systems for interacting intelligently with a wearable portable device. By using at least one inertial sensor to detect different gestures, which are mapped to different predetermined functions, the user may interact intelligently with the wearable portable device. A gesture may include any human motion which results in forces sensed by the wearable portable device, including tilting, shaking, tapping, and moving, and can include more complex gestures including a plurality of different actions in pre-defined sequences. When forces are sensed by the inertial sensor, the wearable portable device may identify the gesture being performed and execute the predetermined function associated with the gesture. Predetermined functions associated with the gesture can include substantially any interaction with the user interface of the wearable portable device, including any of selecting an item on the display, scrolling a menu or a displayed screen, for example. By using such gestures as input mechanisms to execute the predetermined functions, the need for a keyboard or other button-based user interface may be eliminated.

[0014] FIGS. **1**A-**1**B and **2** are block diagrams illustrating exemplary embodiments of a wearable portable device **10** (the "portable device") having a modular movement where like components have like reference numerals. The wearable portable device **10** can be wearable, for example, on a user's wrist, upper arm, and/or leg, or may be attached to the user's clothing, and may have the functions of a wristwatch, a wearable display, a portable media player, and/or a mobile telephone in various embodiments. According to the exemplary embodiments, the portable device **10** may comprise a modular movement **12** (the "module") and a case **14**. The module **12** includes a body **16** that houses a plurality of layers, including an integrated display **18** (which may be touchscreen) and a movement subassembly **20**, for displaying information, including time. FIG. **1**A is a diagram of module **12** shown with a semitransparent body **16** for convenience so that subassembly **20** can be seen through body **16**.

[0015] As used herein, the term "modular" means that the body **16** of the module **12** includes all parts necessary for

operation and power of the module **12**. Thus, the module **12** of the exemplary embodiment is fully functional in a standalone state. However, according to the exemplary embodiment, the case **14** of the portable device **10** includes a receptacle **22** for removably receiving the module **12** without need for a tool, such that the module **12** can be either used with the case **14** of the portable device **10** and/or is user interchangeable with the cases of other electronic devices having the same or similar types of receptacles.

[0016] The portable device **10** is shown as a wristwatch; however, various embodiments of the invention include other accessory forms. For example, some embodiments include other accessories with mounts for the module **12**, such as mobile phones, computer bays, automobile mounts (e.g., dashboard mount, console mount), handheld games, media players (e.g., MP3 players), necklaces, brooches, belts, keyboards, cameras, bicycle, keychain, video camera, speaker platforms, and ankle bracelets.

[0017] In an alternative embodiment, the portable device **10** may be implemented as a stand-alone device, such as cell phone, where the functions of module **12** including the below-described gesture-based user interface, are integrated into the stand-alone device.

[0018] In one embodiment, the body **16** may be constructed to provide the module **12** with a degree of water resistance and dust protection. For example, the body **16** may be a single shell except for an opening for the display **18** and once the display **18** is in place, the display **18** may by sealed with the body **16** using traditional waterproofing methods. In another embodiment, the body **16** may be assembled in separate pieces but then sealed once assembled.

[0019] In one exemplary embodiment, the module **12** and the receptacle **22** in the case **14** are made industry standard sizes, such that different modules **12** manufactured and sold by a one set of manufacturers fit within the receptacles of different cases manufactured and sold by another set of manufacturers, for example.

[0020] FIGS. **1**A and **1**B show an embodiment where the receptacle **22** is formed as an opening in the back of the case **14** and where the top or front of the case **14** includes an opening. In this embodiment, the module **12** is inserted into the case **14** from the bottom or back of the case **14**, and once inserted the display **18** of the module is visible through the opening in the top of the case **14**. When the module **12** is used in an portable device **10**, such as a watch, the display **18** of the module **12** becomes the display **18** of the portable device.

[0021] The display **18** can include a display assembly including a color LCD display, a glass overlay and a touch-sensitive overlay. The display **18** may form the top of the portable device **10** in an exemplary embodiment. The display **18** can be color, monochrome, black and white, or grayscale. The glass in the display **18** can be a number of different materials, including glass, tempered glass, quartz, plastic, soda lime glass, white soda lime glass, aluminosilicate, and/or sapphire. The glass represents a transparent barrier between the outside world and the display area that also offers a degree of scratch resistance. In some embodiments, the display includes an active viewable area of 25.4 (H)×25.4 (V) mm, with a display resolution between approximately 128 (H)×128 (V) and 200 (H)×200 (W) pixels. Other embodiments include other display resolutions. The display **18** may also include a wireless antenna for communications with, for example, a Bluetooth headset. In some embodiments the display **18** has an active area that measures less than 2.5" diagonally (in other embodiments, less than 2" diagonally).

[0022] In one embodiment, the depth or thicknesses of the module **12** and the case **14** may be designed to be substantially similar, so that when the module **12** is inserted, the side of the module **12** facing the open end of the receptacle **22** is coplanar with the back of the case **14** (and the wearer's arm), as shown in FIG. **1**A. Once the module **12** is inserted into the receptacle **22**, in one embodiment, no closure is necessary to seal the case **14** unlike with traditional watches.

[0023] Also, once inserted, the display **18** of the module **12** that is open through the top of the case **14** may be designed to be approximately coplanar with, slightly above, or slightly below, the top of the case **14**.

[0024] As used herein, the portable device **10** may include a combination of both the case **14** and the module **12**. But the term "case" **14** may denote the body of the portable device **10** into which the receptacle **22** is formed and into which the module **12** is to be inserted. Thus, for portable device **10**, such as a watch, the proportionate size of the portable device/case to the receptacle **22** is small (FIGS. **1**A and **1**B). But for larger portable devices, the size of the portable device/case to the receptacle **22** may be larger.

[0025] According to another aspect of the exemplary embodiment, the module **12** is implemented as a computer-based electronic movement that is used to power the portable devices into which it is inserted, as described below.

[0026] FIG. **2** is a diagram of an exploded view of the module and components thereof when implemented as a computer-based electronic modular movement according to one exemplary embodiment. As shown, the module **12** includes body **16** that houses multiple layers of components, which in this exemplary embodiment, may include a plastic internal chassis **200**, a rechargeable-type battery **202**, a printed circuit board (PCB) **204**, a touchscreen **206**, and an optional second plastic internal chassis **208** and protective covering **212**. In this embodiment, the module **12** has six sides, but the side with the touchscreen **206** is substantially all display area.

[0027] The PCB **204** may include components (described below) such as a memory and processor for executing software that displays a user interface on the touchscreen **206** and that operates the module **12**; and an optional communications interface for receiving data remotely, which may be displayed and updated on the touchscreen **206**.

[0028] Other components of the module **12** may include an antenna (not shown) that wraps around the body **16** (alternatively embedded in case **14**), and a set of contacts **210** inserted into the body **16** and in contact with the PCB. The contacts may be used for recharging the battery (the contacts are both power and ground) and/or for serialized communications. The contacts can also be used for orientation purposes for the user to tell which side of the module **12** is up or down when inserting the module **12** into the receptacle **22** of the case **14**. In one embodiment, the contacts **210** are located on a side of the module **12** that is in the receptacle **22** opening so that the portable device **10** as a whole can be placed in a dock and the contacts **210** used to abut the contacts of the dock. In another embodiment, the contacts **210** are located on a side of the module **12** that face inward into the receptacle **22** for abutting with contacts in the receptacle **22**. In yet another embodiment, the contacts **210** may be located on the module **12** such that the contacts **210** wrap around at least two side of the module **12** to be used in both manners.

[0029] During assembly, the contacts **210** are inserted into the body **16**; and the layers of components are assembled as shown into a movement subassembly **20**. The movement subassembly **20** is then inserted into the body **16** and the body is sealed, creating the computer-based modular movement **12**.

[0030] FIG. **3** is a block diagram illustrating computer components on the PCB comprising the module **12** according to an exemplary embodiment. In one embodiment, the PCB **504** containing computer **600** may be implemented as a single sided or double-sided PCB. In another embodiment, the PCB **504** may be implemented as separate PCBs and stacked within the movement subassembly **514**.

[0031] Computer **600** may include components such as processors **602**, memories **604**, inputs/outputs **606**, power manager **608**, a communications interface **610**, and sensors **612**. In one embodiment, one or more of the components of the computer **600** may be implemented on a single chip.

[0032] The processors **602** may include at least one microprocessor **614**, a digital signal processor (DSP), a global positioning chip (GPS) **616**, and a clock **620**. Microprocessor **614** and/or DSP may be capable of concurrently executing multiple software routines, including system code, to control the various processes of the modular movement **12**. In one embodiment, microprocessor **614** may comprise an Advanced RISC Machine (ARM) processor or the like may be used, for example. GPS **618** may process received signals and with or without microprocessor **614** determine position information such as location, speed, direction, and time.

[0033] Clock **620** may be used as an internal timing device for the computer **600**. Clock **620**, which may also be referred to as a real-time clock or system clock, inputs to the microprocessor **614** a constant flow of timing pulses for operation of the microprocessor **614**. Clock **620** may also keep track of the time of day and makes this data available to the software routines executing in microprocessor **614**. In one embodiment, clock **620** comprises a silicon clock oscillator implemented using micro-electro-mechanical systems (MEMS) technology. In another embodiment, clock **620** may utilize a quartz crystal oscillator.

[0034] Memories **604** may include a random access memory (RAM) **622** and a nonvolatile memory **626**. RAM **622** may be used as the main memory for microprocessor **614** for supporting execution of the software routines and other selective storage functions. Non-volatile memory **626** is capable of holding instructions and data without power and may store the software routines for controlling modular movement **12** in the form of computer-readable program instructions. In one embodiment, non-volatile memory **626** comprises flash memory. In alternative embodiments, non-volatile memory **626** may comprise any type of read only memory (ROM).

[0035] The non-volatile memory **626** may contain a user interface application **623**, which can provide functionality for the portable device **10** and can output a graphical user interface on the display **18**. The non-volatile memory **108** can include a gesture store **625** (e.g., a database, or a look-up table), which can contain definitions of different gestures in the form of combinations of sensor inputs, defined here as "gesture rules," and predetermined functions associated with the gestures that are executed upon identification of the gestures. When executed, the user interface application **623** can access the gesture rules stored in gesture store **625** when movement of the portable device **10** is sensed. When the movement satisfies the rules in a gesture definition, the predetermined function may be executed, as described below.

[0036] I/Os **606** may include a display controller **630**, an audio chip **632**, and a touchscreen controller **634**. Display controller **630** may access RAM **622** and transfer processed data, such as time and date and/or a user interface, to the touchscreen **506** for display. The audio chip **632** is coupled to an optional speaker (not shown) and interfaces with microprocessor **614** to provide audio capability for the modular movement **12**. In another embodiment, the audio chip **632** may be coupled to both a speaker and a microphone (not shown). In this embodiment, a water resistant/proof speaker and microphone may be used to retain water resistance of the modular movement **12**. In an alternative embodiment, the modular movement **12** may be implemented without sound capability, in which case no audio chip **632**, speaker or microphone is necessary.

[0037] In the embodiment where the audio chip **632** is coupled to both a speaker and microphone, the microphone may record voice input that is first processed by the audio chip and then input to the microprocessor **614** for further processing. The audio chip **632** may include hardware and/or software that converts analog voice into pulse code modulation (PCM) or Adaptive Differential PCM (ADPCM) digital code and vice versa, as well as for compressing and decompressing the PCM or ADPCM digital audio signal. In one embodiment, the processed voice input may be stored for subsequent playback. In another embodiment, the processed voice input may be transferred to communications interface **610** for wireless transmission.

[0038] Touchscreen controller **634** may interface with the touchscreen **506** to detect touches and touch locations and pass the information on to microprocessor **614** for determination of user interactions. Another example I/O **606** may include a USB controller (not shown).

[0039] Power manager **608** communicates with the microprocessor **614** and coordinates power management for the computer **600** while the computer is drawing power from the battery **502** during normal operations. In one embodiment, the battery **502** may comprise a rechargeable, lithium ion battery or the like may be used, for example. The power manager **608** includes a voltage controller **636** and a charging controller **638** for recharging the battery **502**. Voltage controller **636** may regulate battery voltage to the rest of the computer **600**, and charging controller **638** may manage appropriate voltage levels to properly charge the battery **502**. Power manager **608** may further include a microcontroller (not shown) in one embodiment.

[0040] The communications interface **610** may include components for supporting one-way or two-way wireless communications. In one embodiment, the communications interface **610** is for primarily receiving data remotely, including streaming data, which is displayed and updated on the touchscreen **506**. However, in an alternative embodiment, besides transmitting data, the communication interface **616** could also support voice transmission. In an exemplary embodiment, the communications interface **610** supports low and intermediate power radio frequency (RF) communications. The communications interface **610** may include one or more of a WiFi transceiver **640** for supporting communication with a WiFi network, including wireless local area networks (WLAN), and WiMAX; a cellular transceiver **642** for supporting communication with a cellular network; Bluetooth transceiver **644** for low-power communication accord-

ing to the Bluetooth protocol and the like, such as wireless personal area networks (WPANs); and passive radio-frequency identification (RFID) **646**. Others wireless options may include baseband and infrared, for example. The communications interface **610** may also include other types of communications devices (not shown) besides wireless, such as serial communications via contacts **510** and/or USB communications, for example.

[0041] The sensors **612** are representative of devices that can take information about the outside world and supply it to the device **10**. The sensors **612** can also function with other components to provide user or environmental input and feedback to a user. Sensors **612** may include at least one of each of an inertial sensor **648**, and any number of optional sensors **1**-*n*. Inertial sensor **648** can include a MEMS accelerometer (e.g., a 3-axis accelerometer from ST Microelectronics LIS302DL) that may be used to measures information such as position, motion, tilt, shock, and vibration for use by microprocessor **614**. A MEMS inertial sensor may be advantageous because it may be fabricated in a very small size (e.g., 5×5×1 millimeters), consume very little power, and still be sensitive to gestures. Because a portable device, such as a wristwatch, has a very small volume and limited battery power, MEMS sensors may be particularly suited for implementation of a gesture-based interface in a wristwatch. Another example of an inertial sensor **648** includes an accelerometer and/or a gyroscope to provide information about movement of the portable device **10**.

[0042] In an exemplary embodiment, the inertial sensor **648** may be designed to have a sensitivity appropriate to detect gestures that fall within a normal range of human motions. For example, a ±2 g or ±3 g inertial sensor, with a bandwidth of 0.1 Hz-10 Hz, may be used to provide a desired level of sensitivity. Exemplary commercially available inertial sensors include inertial sensors marketed by Freescale Semiconductor, Inc. of Austin, Tex., Analog Devices, Inc. of Cambridge, Mass., and STMicroelectronics N.V. of Geneva, Switzerland.

[0043] The inertial sensor **648** may output a voltage signal whose magnitude is proportional to the movement sensed in an exemplary embodiment. In some embodiments, a different voltage signal may be output for each degree of freedom possessed by the inertial sensor **648**. For example, if the inertial sensor **648** is a two-axis accelerometer, it can output two voltage signals, corresponding to the sensed motion in the X and Y axes. Likewise, if the inertial sensor **648** is a three-axis accelerometer, the inertial sensor **648** may output three voltage signals that correspond to the sensed motion in the X, Y, and Z axes. The inertial sensor **648** may also include a gyroscope, which may detect angular motion, and output three voltage signals corresponding to sensed angular motion in the ϕ, θ, and ψ directions. The voltage signal or voltage signals may each be transmitted to the processor using one pin per voltage signal (e.g., for a three-axis accelerometer, one pin for each of the X, Y, and Z axes), or by using fewer pins. In an exemplary embodiment, a single pin may be used for transmission of all of the voltage signals. A single pin may be advantageous because it may require fewer wires and take up less space on a circuit board.

[0044] The optional sensors **1**-*n* may include environmental sensors (e.g., ambient light (e.g., TPS851 from Toshiba), temperature, humidity, pressure and/or altitude, magnetic (e.g., Hall Effect), compass, etc), biological sensors (e.g., pulse, pulse oximetry, body temperature, blood pressure, body fat, etc.), and a proximity detector for detecting the proximity of objects. Other examples of sensors include touch screen sensors, haptic sensors, and audio input. In the embodiment where the display **18** comprises a touch screen, the touch screen can be capacitance and/or resistance based, or any other touch sensitive device that provides user touch information. In one embodiment, the proximity detector may be implemented as an infrared data Association (IRDA) proximity detector. The computer **600** may display the information measured from the sensors **612**, analyze the information by microprocessor **614** and display the analyzed information, and/or transmit the raw or analyzed information via the communications interface **610**. In one embodiment, not all of the sensors **612** may be located on PCB **504**.

[0045] In one exemplary embodiment, the computer **600** includes an inertial sensor **648**, which may be a MEMS accelerometer (or other inertial sensor capable of motion tracking in at least two dimensions such as a gyroscope), an ambient light sensor, and a proximity sensor, such as an infrared sensor. According to the exemplary embodiment, the combined information from these sensors is used to provide feedback required to determine when the display **18** is visible to the user and should be turned on or off. For example, see "Gesture-Based Power Management for a Wearable Portable Electronic Device Assigned," Ser. No. _____ with a filing date of _____, assigned to the same assignee as the present application.

[0046] FIG. **4** illustrates an exemplary embodiment of a process for providing a gesture-based user interface for a portable device. A gesture is received comprising a movement of the portable device **10** (block **400**). The gesture, as described above, may be detected by the inertial sensor **648**, and voltage signals can be output by the inertial sensor **648** to the microprocessor **614** that correspond to the gesture detected.

[0047] In an exemplary embodiment, the definition of a sensed gesture may include at least one axis of movement, a frequency, and a force magnitude. The axis of movement can be, as described above, the axes within which the movement takes place. The frequency can be the frequency of a vibration, or of a repeated movement. The force magnitude can be the g force of the force applied to the portable device **10**. The definition of a gesture may further include information received from any optional sensors **1**-*n* on board the portable device **10**, such as a pressure, a temperature range, a sensed light intensity, etc.

[0048] FIG. **5** illustrates exemplary embodiments of gestures and corresponding voltage signals generated by an inertial sensor in response to gestures made by a wearer of the portable device **10**. Graphs **520** and **524** display spatial representations of gestures, and graphs **521** and **525** respectively display voltage signals associated with the gestures in graphs **520** and **524**. The voltage signals shown in graphs **521** and **525** are the output of the inertial sensor **648**, which includes three degrees of freedom, with one degree corresponding to motion sensed in each of the X, Y, and Z directions. The voltage signals are accordingly labeled "x-voltage," "z-voltage," and "y-voltage," and when motion is sensed in one or more of the X, Y, and Z direction, a signal associated with the direction is transmitted by the inertial sensor **648** to the microprocessor **614**.

[0049] Graph **520** shows an exemplary gesture, tapping the face of the portable device **10** once, which can cause mechanical vibration in the z direction. The inertial sensor **648** may detect this movement, and output a corresponding voltage signal **522** corresponding to movement in the z direction. Because there is no motion in the x or y directions, a zero value is output by the inertial sensor **648** for the x-voltage and y-voltage signals in graph **521**. Diagram **524** shows another exemplary gesture, shaking the watch up and down in the y

direction. Graph **524** shows that a gesture of shaking the portable device **10** up and down (y direction) may produce a corresponding oscillating signal **526** by the inertial sensor **648**. Similarly, because the gesture shown in graph **524** does not contain movement in the X or Z direction, the x-voltage and z-voltage signals are zero in graph **525**.

[0050] The optional sensors **1**-*n* can be used to provide information regarding a gesture that differs from the information provided by the at least one inertial sensor **648**. Examples of what the optional sensors **1**-*n* can include a touch screen, an ambient light detector, a thermometer, and/or a pressure sensor. The optional sensors **1**-*n* can allow gestures to be sensed that include additional data instead of only a force applied to the portable device **10**. For example a gesture may include a pressure sensed on the portable device **10**. A gesture could further include sensing a temperature range, which can be triggered when a user holds the portable device **10** in his or her hand, thereby causing the temperature of the device to increase from ambient air temperature to body temperature. Additionally, a gesture may include a sensed amount of ambient light upon the portable device **10**. Gestures depending upon the amount of ambient light can, for example, cause predetermined functions to be executed on the portable device **10** when a user covers the face or display of the portable device **10** from exposure to light, or when the user places the face or display of the portable device **10** in close proximity to a light source.

[0051] Gestures may also be used to input text characters to the user interface. Referring again to FIG. **4**, in response to sensing the gesture, at least one character is identified that is associated with the gesture (block **402**). This can be done, for example, by the microprocessor **614**, which may receive at least one signal from the inertial sensor **648** describing the gesture sensed. The identifying of the character(s) may include having the at least one signal include signal data including at least one axis of movement, a frequency, and a force magnitude and comparing the signal data with prestored signal data values associated with a plurality of characters to find at least one character associated with substantially similar prestored signal data values as the gesture. The character (s) associated with a gesture may be an alphanumeric character or characters, which may take the form, for example, of a number, a letter, a word, or a plurality of words.

[0052] Signal processing may be performed on the signal (s) by the microprocessor **614** (e.g., to remove noise from the signal(s), or to adjust the signal(s) to make subsequent analysis simpler). The signal(s) may be compared against a set of pre-established rules stored on the portable device **10** (e.g., on the non-volatile memory **626**) to identify the character(s) associated with the gesture. The set of pre-established rules can describe the movement corresponding to a gesture recognized by the user interface of the portable device **10** (e.g., the amount of movement in each of the x, y, and z directions). In an exemplary embodiment, the voltage versus time output of the sensors **612** (e.g. the inertial sensor **648** and optional sensors **1**-*n*) may be continuously analyzed according to a pre-determined software algorithm and compared against a set of gesture rules stored for example in gesture store **625**. As described below, the rules may be customized by the user in an exemplary embodiment.

[0053] As data is received from the sensors, the data may be buffered in the non-volatile memory **626** in order to provide the microprocessor **614** with sufficient time to perform signal processing on the raw sensor output. An example of the signal processing that might be performed is data averaging, which may eliminate noise in a signal by a means of successive averaging of data points. Another example of the signal processing can be a Fourier Transform, whereby the sensor output data is mathematically converted from the time domain to the frequency domain in order to analyze the frequency content of a signal. The signal processing may enable the portable device **10** to derive signal data from the raw sensor signal, such as if the inertial sensor **648** is detecting a ±0.5 g Y axis vibration with a frequency of 2 Hz. The signal data from the raw signal can then be compared to the gesture store **625** on a continuous basis to determine if the signal or set of signals satisfy a gesture rule.

[0054] FIG. **6** illustrates an exemplary embodiment of a process for identifying a gesture. In an exemplary embodiment, a gesture rule may include the following conditions:

[0055] Sense Axis: Y AND

[0056] Magnitude: between 0.4 and 1.0 g AND

[0057] Frequency: between 2-3 Hz AND

[0058] Ambient light sensor: Light detected

[0059] Predetermined function=randomly generate a number from 1 to 6 and display the result on the wristwatch display as an image of a gaming die

[0060] The gesture store **625** may contain dozens or hundreds of gesture rules, each including a unique set of conditions. The processed signals are received (block **700**), and a gesture identification algorithm is executed by the user interface application **623** (block **702**). The gesture identification algorithm may compare the signal data output from signal processing against the set of gesture rules in the gesture store **625** in order to determine if the conditions for a stored gesture have been met. In the exemplary embodiment, the gesture identification algorithm compares the signal data from the processed sensor signals against a selected gesture rule to determine if there is a match (block **704**). For the "Roll the Dice" exemplary gesture rule described above, it is determined if the active sense axis is the Y axis only, the magnitude is between 0.4 and 1.0 g, the frequency is between 2 and 3 Hz, and the light sensor is active.

[0061] If the processed signals do not match the conditions for the gesture rule, then the processed signals are compared against other gesture rules in the gesture store (block **706**). If the signal data from the processed sensor signals meet each of the gesture rule conditions, the predetermined function is performed (block **710**). In the example above, the ±0.5 g Y axis, 2 Hz signal is identified as "roll the dice", and a number from one to six is randomly selected and displayed on the portable device **10**. It may be advantageous to utilize a plurality of inertial sensors **648** and/or optional sensors **1**-*n* because a more precise set of conditions may be used to define a gesture rule. Gesture rules having more precisely defined conditions may be more unlikely to be confused with each other due to the larger number of conditions, and may also permit a larger number of gestures to be stored and utilized.

[0062] Referring to FIG. **4**, after the character(s) associated with the gesture has been identified, the character(s) (corresponding to the identified gesture) are displayed on the portable device (block **404**). A wide variety of possible gestures and/or gesture schemes may be used to cause characters to be displayed on the display **18** of the portable device **10**. For example, to display numbers, the gesture can be tapping the portable device **10** a number of times and the character(s) displayed can be the number of times the portable device **10** is tapped. To display letters, the gesture can be tapping a message using Morse code on the portable device **10**, and the character(s) displayed can be the message. In another exemplary embodiment, the gesture can be using the portable device **10** to mime (e.g., draw in the air with the wrist wearing the portable device **10**) the character(s), which can be identified and displayed on the portable device **10**. Allowing char-

acters to be input to the portable device **10** in the manner described in FIG. **4** may be advantageous because it can eliminate the need for conventional devices used for character entry (e.g., buttons, a stylus or similar writing apparatus, an alphanumeric keypad, etc.). Such conventional character input devices may be ill-suited for the portable device **10** due to the small size of the display in many embodiments of the portable device **10** (e.g., a watch, a necklace, other examples described above).

[0063] As stated above, gestures may be pre-programmed into the portable device **10** and/or may be defined or reconfigured and customized by the user through use of a web-based application and/or a software tool on the portable device **10**. For example, a user may prefer that the gesture "roll the dice" described above correspond to a ±0.25 X axis, 2 Hz signal, because this motion feels more natural to them than the prior definition. The software tool and/or web service would accordingly allow the user to modify this rule in the gesture store **625**.

[0064] An exemplary software tool used for defining gestures and/or the character(s) can be implemented on the portable device **10**, or on a separate device in communication with the portable device **10**, such as a personal computer to which the portable device **10** is docked or connected. In an exemplary embodiment, the user may change the gesture associated with a predetermined function by entering an "edit gesture" mode using the user interface application **623**. The portable device **10** may then prompt the user for a gesture, and sense the received gesture. Using signal processing techniques such as those described above, signal data may be derived from a raw signal corresponding to the sensed gesture. In an exemplary embodiment, the device may prompt the user to repeat the gesture multiple times, so as to gather statistical data on the minor variations of a user's gesture and to formalize those variations in the gesture rule. The signal data may then be translated (e.g., by the software tool) into conditions that make up a new gesture rule for the predetermined function.

[0065] For example, a user could change the gesture associated with the function "Roll the Dice" from that defined above to a new gesture. The desired new gesture could be to remove the module **12** from its case **14**, place it on a hard surface, and then spin the module **12** about its center axis. After the new gesture is performed, the parameters that are sensed could be:

[0066] Connection status: removed from case AND

[0067] Temperature<98 F (not in contact with the user) AND

[0068] Sense Axis X=r*cos ωt, where ω is the rate of rotation, equal to 6.2 radians/second, and r is the magnitude of the force sensed AND

[0069] Sense Axis Y=r*sin ωt, where ω is the rate of rotation, equal to 6.2 radians/second, and r is the magnitude of the force sensed

[0070] While the first two conditions are substantially unambiguous, one can easily imagine that the user will not be able to precisely spin the unit at 6.2 radians/second every time. The module **12** could then prompt the user to repeat the gesture four more times. The recorded rate of each spinning gesture may be, for example: 4, 5.2, 7, and 6.5 radians per second. The gesture rule, in an exemplary embodiment, could then be stored as:

[0071] Connection status: removed from case AND

[0072] Temperature<98 F (not in contact with the user) AND

[0073] Sense Axis X=r*cos ωt, where ω is the rate of rotation, in the range of 4 to 7 radians/second, and r is the magnitude of the force sensed AND

[0074] Sense Axis Y=r*sin ωt, where ω is the rate of rotation, in the range of 4 to 7 radians/second, and r is the magnitude of the force sensed

[0075] The new gesture rule may then be stored in the gesture store **625** for future reference as described above.

[0076] As stated above, gesture definitions may also be modified using a web service. FIG. **7** is a diagram illustrating communication between an exemplary portable device **10** and an exemplary profile web service **726** including at least one customizable gesture profile **728** for the portable device **10**. In the exemplary embodiment, the gesture store **625** of the portable device **10** may include one or more gesture profiles **720**. The gesture profiles **720** may include rules for one or more different gestures that can be recognized by the portable device **10**. For example, an application simulating playing a game of craps can have a craps game gesture profile, which may include rules for gestures for rolling dice and placing a bet. Gesture profiles **720** may exist for each application stored on the portable device **10** in an exemplary embodiment. Gesture profiles **720** may also be used to define functionality and/or features shared by multiple applications (e.g., as part of the user interface application **623**).

[0077] The portable device **10** can be in communication with a profile web service **726**, which may be stored on a server **724**, through a network **722**. The profile web service **726** may include customizable gesture profile **728**, containing at least one modified gesture. The modified gesture may differ in at least one way from the gesture rules in gesture store **625** (e.g., has different conditions, or a different predetermined function). The customizable gesture profile **728** may also contain modified settings for the gesture profiles **720** and/or gesture profiles for applications that may be downloaded to the portable device **10**. The user may select the customizable gesture profile **728** from a plurality of stored profiles on the profile web service **726**, or create a new one (e.g., as described above). In an exemplary embodiment, the user may enter his or her personal preferences regarding a gesture (e.g., the user's dominant hand and/or physical dimensions). A customizable gesture profile **728** may then be automatically generated based upon the entered gesture preferences. The profile web service **726** may also allow editing of existing gesture profiles or the creation of new gesture profiles in the same way as the software tool embodiment described above.

[0078] When the user identifies a customizable gesture profile **728** of interest, the user may download the customizable gesture profile **728** from the profile web service **726** to the gesture store **625**. When downloaded, the customizable gesture profile **728** may exist separately from the gesture profiles **720** or it may overwrite the settings within one or more of the gesture profiles **720** in the non-volatile memory **626** of the portable device **10**. The latter may be desirable, for example, when updating functionality of the user interface application **623**.

[0079] In an exemplary embodiment, the portable device **10** can also include a minimum number of pre-stored gestures and associated predetermined functions to allow basic interaction with the user interface application **623** of the portable device **10**. For example, sensing downward motion of the portable device **10** can be associated with a predetermined function of scrolling down a menu displayed on the user interface, and sensing upward motion of the portable device

10 can be associated with a predetermined function of scrolling up a menu displayed on the user interface. Furthermore, sensing a tap on the display **18** of the portable device **10** can correspond to the predetermined function of selecting an item displayed on the user interface that is proximate to a location on the display **18** where the tap is sensed. Sensing a tap on a side of the portable device **10** can correspond to the predetermined function of returning to a previous screen displayed on the user interface. In another example, sensing a gesture where the portable device **10** is inverted and maintained in the inverted position for one second can correspond to the predetermined function of returning to a main menu of the user interface.

[0080] In one embodiment, the gestures defined in a profile, such as the profile for the user interface application **623** can include the following.

Gesture Name	Definition	Purpose
TAP	Striking the display once.	Selects an item or engages a user interface button.
DOUBLE-TAP	Striking the display twice quickly.	Turns the portable device on. Historical back: returns the user to the previous level in the user interface hierarchy.
FLIP	Flicking a finger across about the middle of the display.	Turns pages horizontally 1-by-1.
SCROLL	Sliding down about the middle of the display.	Scrolls a list until the thumb or finger lets go; at which point, the list decelerates to a stop.
PRESS & HOLD	Pressing the display and holding the display until it changes.	Opens options and settings menus.
TWO-FINGER-TAP	Striking the display simultaneously in two distinct areas.	Returns the user directly to the homepage (e.g., the Clock application).
TRIPLE-TAP	Striking the display thrice quickly.	Returns the user directly to the homepage, (e.g., the Clock application)

[0081] Gestures may be different and correspondingly produce different signals when performed using a user's left and right hand. Therefore, in an exemplary embodiment, the portable device **10** may, in a stored gesture rule, include conditions associated with gestures when performed with the left hand of the user, in addition to conditions associated with gestures performed with the right hand of the user. In another embodiment, the portable device **10** may automatically detect if the user is wearing the portable device **10** on the user's left hand when receiving a gesture, and may compare subsequent gestures against conditions for left-handed gestures. In another exemplary embodiment, a user can manually indicate that the user is wearing the portable device **10** on the user's left hand (e.g., entering a left-hand mode, or selecting "left hand" as the location of the portable device **10**).

[0082] In addition to the basic functionality described above, gestures and associated predetermined functions can be used by different applications executed on the user interface. For example, in games involving simulated dice, the gesture received can be shaking the portable device **10** and then miming a dice-throwing motion, and the predetermined function executed can be displaying at least one dice face on the user interface. Likewise, in games involving playing cards, the gesture received may include rotating the portable device **10** by at least a predetermined angle, and the predetermined function executed can be displaying images corresponding to playing cards on the user interface.

[0083] A method and system for providing a gesture-based user interface for a portable device has been disclosed. The present invention is mainly described in terms of particular systems provided in particular implementations. However, this method and system may operate effectively in other implementations. For example, the systems, devices, and networks usable with the present invention can take a number of different forms. The present invention will also be described in the context of particular methods having certain steps. However, the method and system operate effectively for other methods having different and/or additional steps or steps in a different order not inconsistent with the present invention.

[0084] The present invention has been described in accordance with the embodiments shown, and there could be variations to the embodiments, and any variations would be within the scope of the present invention. For example, the present invention can be implemented using hardware, software, a computer readable medium containing program instructions, or a combination thereof. Software written according to the present invention is to be either stored in some form of computer-readable medium such as memory or CD-ROM, or is to be transmitted over a network, and is to be executed by a processor. Accordingly, many modifications may be made without departing from the scope of the appended claims.

We claim:

1. A method for providing a gesture-based user interface for a wearable portable device, comprising:

receiving a gesture comprising a movement of the wearable portable device;

identifying at least one character associated with the gesture; and

displaying the at least one character on the wearable portable device.

2. The method of claim **1** wherein the receiving the gesture comprises receiving a voltage signal associated with the gesture.

3. The method of claim **2** wherein identifying the at least one character comprises receiving the voltage signal, wherein the voltage signal comprises signal data comprising at least one axis of movement, a frequency, and a force magnitude of the gesture, and comparing the signal data with prestored signal data values associated with a plurality of characters to find at least one character associated with substantially similar prestored signal data values as the gesture.

4. The method of claim **1** wherein the receiving the gesture comprises sensing a number of taps on the wearable portable device and the displaying the at least one character comprises displaying the number of taps sensed.

5. The method of claim **1** wherein the receiving the gesture comprises sensing a message in Morse code tapped on the wearable portable device and the displaying the at least one character comprises displaying the sensed message in text form.

6. The method of claim **1** wherein the receiving the gesture comprises sensing use of the wearable portable device to mime the at least one character.

7. The method of claim **1** wherein the gesture is defined by a user using a software tool.

8. The method of claim **1** wherein the at least one character is defined by a user using a software tool.

9. The method of claim **1** wherein the receiving the gesture further comprises sensing at least one of a pressure on the wearable portable device, a temperature range, and an amount of light upon the portable device.

10. The method of claim **1** further comprising:

receiving a second gesture comprising a second movement of the wearable portable device, identifying a predetermined function of a user interface associated with the second gesture, and executing the predetermined function on the user interface.

11. The method of claim **10** wherein the receiving the second gesture comprises sensing a tap on a side of the wearable portable device and the executing the predetermined function comprises returning to a previous screen of the user interface.

12. The method of claim **10** wherein the receiving the second gesture comprises sensing inversion of the wearable portable device and maintenance of an inverted position for one second, and the executing the predetermined function comprises returning to a main menu of the user interface.

13. The method of claim **10** wherein the receiving the second gesture comprises sensing rotating the wearable portable device by at least a predetermined angle and the executing the predetermined function comprises displaying images corresponding to playing cards on the user interface.

14. The method of claim **1** wherein the wearable portable device comprises a module configured to execute the method of claim **1**.

15. The method of claim **1** further comprising deriving signal data from a raw signal describing the gesture, wherein identifying at least one character comprises comparing the signal data to a plurality of gesture rules in a gesture store on a continuous basis to find a match.

16. The method of claim **15** wherein the gesture rules comprise conditions associated with a gesture performed with a left hand of a user, in addition to conditions associated with a gesture performed with a right hand of the user.

17. A wearable portable device having a gesture-based user interface, comprising:

an inertial sensor

a display;

a processor; and

a user interface application executing on the processor, wherein the user interface application is configured to:

receive at least one signal from the inertial sensor corresponding to a sensed gesture comprising a movement of the wearable portable device;

compare the at least one signal against a set of pre-established rules to identify at least one character associated with the sensed gesture; and

display the at least one character on the display.

18. The wearable portable device of claim **17** wherein the at least one signal comprises at least one axis of movement, a frequency, and a force magnitude.

19. The wearable portable device of claim **17** wherein the at least one signal has a magnitude that is proportional to sensed movement.

20. The wearable portable device of claim **17** wherein the at least one signal comprises two voltage signals corresponding to a movement in the X and Y axes.

21. The wearable portable device of claim **17** wherein the at least one signal comprises three voltage signals corresponding to a movement in the X, Y, and Z axes.

22. The wearable portable device of claim **17** wherein the inertial sensor senses angular motion, and the at least one signal corresponds to angular motion in the ϕ, θ, and ψ directions.

23. An executable software product stored on a computer-readable medium containing program instructions for providing a gesture-based user interface for a wearable portable device, the program instructions for:

receiving a gesture comprising a movement of the wearable portable device;

identifying at least one character associated with the gesture; and

displaying the at least one character on the wearable portable device.

24. A system for providing a gesture-based user interface, comprising:

a wearable portable device comprising one or more gesture profiles that each include at least one gesture and a predetermined function associated with the at least one gesture; and

a profile web service, wherein the portable device is in communication with the profile web service and is configured to download from the profile web service to the wearable portable device a customizable gesture profile comprising at least one modified gesture that differs from the at least one gesture.

25. A wearable portable device having a gesture-based user interface, comprising:

means for tracking motion of the wearable portable device;

a display; and

processing means, wherein processing means is coupled to the display and the processing means is configured to:

receive at least one signal from the means for tracking motion corresponding to a sensed gesture comprising a movement of the wearable portable device;

compare the at least one signal against a set of pre-established rules to identify at least one character associated with the sensed gesture; and

display the at least one character on the display.

26. A wearable portable electronic device having a gesture-based user interface, comprising:

a case; and

a module, wherein the module is configured to be removably received by the case and comprises:

an inertial sensor

a display; and

a processor, wherein the processor is configured to:

receive at least one signal from the inertial sensor corresponding to a sensed gesture comprising a movement of the wearable portable device;

compare the at least one signal against a set of pre-established rules to identify at least one character associated with the sensed gesture; and

display the at least one character on the display.

* * * * *