EXHIBIT 2

[redacted]

IN THE UNITED STATES DISTRICT COURT
FOR THE EASTERN DISTRICT OF TEXAS
MARSHALL DIVISION

WHIRLPOOL CORPORATION, *Plaintiff*, v. SAMSUNG ELECTRONICS CO., LTD. and SAMSUNG ELECTRONICS AMERICA, INC., *Defendants*.	Civil Action No. 2:25-cv-01042-JRG-RSP JURY TRIAL DEMANDED [redacted]

EXPERT DECLARATION OF DR. KIMBERLY K. CAMERON REGARDING NON-INFRINGEMENT AND INVALIDITY OF U.S. PATENT NO. 12,543,922

TABLE OF CONTENTS

I. Introduction 1

A. Background And Qualifications 2

B. Compensation 2

C. Materials Considered 2

II. Summary of Opinions 2

III. The Asserted ’922 Patent 3

A. Overview 3

B. Prosecution History 9

IV. The Accused Samsung Product 12

V. Overview of the Relevant Prior Art 12

A. Carr 12

B. Bosch 800 15

C. Andrew 18

D. Mailander 22

VI. Level Of Ordinary Skill In The Art 25

VII. Non-Infringement of The ’922 Asserted Patent 25

A. Samsung Does Not Infringe Claim 1 of the ’922 Patent 25

1. The Accused Product does not include a “planar portion” that “*includes* a plurality of utensil holders” 25

2. The Accused Product does not include “an upper dish rack” “defining a planar portion and a depression, wherein the depression includes a first angled wall and a second angled wall” 29

B. The Accused Products Do Not Infringe Claims 2-4 and 7-25 of the ’922 Patent 32

1. Samsung Does Not Infringe Claim 13 32

2. Samsung Does Not Infringe Claims 2-4, 7-12, and 14-25 34

VIII. Invalidity 34

A. Carr anticipates or renders obvious independent Claim 1 and dependent Claims 2-4 34

1. Independent Claim 1 34

2. Dependent Claim 2: The dishwasher of claim 1, wherein the plurality of utensil holders is disposed in a utensil caddy operably coupled to the planar portion. 45

3. Dependent Claim 3: The dishwasher of claim 2, wherein the utensil caddy includes a basket that is removably coupled with a bottom wall of the planar portion..... 45

4. Dependent Claim 4: The dishwasher of claim 2, wherein the utensil caddy defines a periphery defining an interior with an open top. 46

B. Bosch 800 Series anticipates or renders obvious independent Claim 1 and dependent Claims 2–4..... 47

1. Independent Claim 1 47

2. Dependent Claim 2: The dishwasher of claim 1, wherein the plurality of utensil holders is disposed in a utensil caddy operably coupled to the planar portion. 56

3. Dependent Claim 3: The dishwasher of claim 2, wherein the utensil caddy includes a basket that is removably coupled with a bottom wall of the planar portion..... 58

4. Dependent Claim 4: The dishwasher of claim 2, wherein the utensil caddy defines a periphery defining an interior with an open top. 59

C. Mailander anticipates or renders obvious independent Claim 1 and dependent Claims 2-4 60

1. Independent Claim 1 60

2. Dependent Claim 2: The dishwasher of claim 1, wherein the plurality of utensil holders is disposed in a utensil caddy operably coupled to the planar portion. 69

3. Dependent Claim 3: The dishwasher of claim 2, wherein the utensil caddy includes a basket that is removably coupled with a bottom wall of the planar portion..... 70

D. Andrew in view of Carr renders obvious independent Claim 1 and dependent Claims 2-4, 7-26 71

1. Motivation to combine Andrew's and Carr's teachings 71

2. Independent Claim 1 73

3. Dependent Claim 2: The dishwasher of claim 1, wherein the plurality of utensil holders is disposed in a utensil caddy operably coupled to the planar portion. 84

4. Dependent Claim 3: The dishwasher of claim 2, wherein the utensil caddy includes a basket that is removably coupled with a bottom wall of the planar portion. 85

5. Dependent Claim 4: The dishwasher of claim 2, wherein the utensil caddy defines a periphery defining an interior with an open top. 86

6. Dependent Claim 7: The dishwasher of claim 2, further comprising: at least one sprayer adjacent to the first set of cup seats and configured to emit a spray of water into a cup held by the first set of cup seats. 87

7. Dependent Claim 8: wherein the at least one sprayer is located between the first set of cup seats and the second set of cup seats. 88

8. Dependent Claim 9: The dishwasher of claim 7, wherein the at least one sprayer extends from a front of the upper dish rack to a back of the upper dish rack. 88

9. Dependent Claim 10: The dishwasher of claim 7, wherein the at least one sprayer is also configured to emit the spray of water into a cup held by the second set of cup seats. 89

10. Dependent Claim 11: The dishwasher of claim 7, wherein the at least one sprayer is configured to provide a straight-line stream of water. 90

11. Dependent Claim 12: The dishwasher of claim 7, wherein the at least one sprayer includes a plurality of nozzles, and wherein each of the spray nozzles is configured to rotate as the at least one sprayer emits the spray of water into the cup held by the first set of cup seats. 93

12. Dependent Claim 13: The dishwasher of claim 7, wherein the utensil caddy includes a diffuser that diffuses the spray of water emitted by the at least one sprayer. 94

13. Dependent Claim 14: The dishwasher of claim 7, wherein the at least one sprayer is configured to emit a straight-line stream of water to the planar portion of the upper dish rack. 95

14. Dependent Claim 15: The dishwasher of claim 7, wherein the at least one sprayer is configured to emit a fan pattern of water. 96

15. Dependent Claim 16: The dishwasher of claim 1, wherein the first set of cup seats is configured to support a set of cups and the second set of cup seats is configured to support a set of mugs. 96

16. Dependent Claim 17: The dishwasher of claim 7, wherein the at least one sprayer is located between the first set of cup seats and second set of cup seats, the at least one sprayer configured to emit

a spray of water into drinking vessels held by the first set and second sets of cup seats. 97

17. Dependent Claim 18: The dishwasher of claim 7, wherein a portion of the spray of water emitted by the at least one sprayer is directed toward the plurality of utensil holders. 98

18. Dependent Claim 19: The dishwasher of claim 7, wherein the upper dish rack includes a wire frame construction that forms the first angled wall and second angled wall. 99

19. Dependent Claim 20: The dishwasher of claim 19, wherein the wire frame construction also forms the planar portion and side walls of the upper dish rack. 99

20. Dependent Claim 21: The dishwasher of claim 19, wherein a plurality of spray nozzles of the at least one sprayer are located beneath the wire frame construction. 99

21. Dependent Claim 22: The dishwasher of claim 21, wherein the plurality of spray nozzles are configured to rotate during said dishwasher operation. 100

22. Dependent Claim 23: The dishwasher of claim 21, wherein the wire frame construction includes a raised section disposed between the first set of cup seats and the second set of cup seats. 100

23. Dependent Claim 24: The dishwasher of claim 23, wherein the plurality of spray nozzles are disposed below a portion of the raised section. 101

24. Dependent Claim 25: The dishwasher of claim 7, wherein a lowermost portion of the first set of cup seats and a lower most portion of the second set of cup seats is disposed below the at least one sprayer. 102

IX. CONCLUSION 104

I. INTRODUCTION

1. My name is Dr. Kimberly K. Cameron. I have been retained to provide this declaration on behalf of Samsung Electronics Co., Ltd. and Samsung Electronics America, Inc. (collectively, "Samsung" or "Defendant") in connection with the above-captioned case. If called to testify as to the contents of this declaration, I can and will testify truthfully and competently.

2. I understand that Whirlpool Corporation ("Whirlpool" or "Plaintiff") has accused certain dishwashers manufactured by Samsung and including a top rack capable of holding both drinkware and silverware, specifically the Samsung 38 dBA Bespoke Smart Dishwasher with 3rd Rack Washing System, with model number DW90F89 ("Accused Product"), of infringing Claims 17-21 of U.S. Patent No. 10,512,385 ("the '385 Patent"), Claims 14-15 of U.S. Patent No. 12,232,681 ("the '681 Patent"), and Claims 1-4 and 7-25 of U.S. Patent No. 12,543,922 ("the '922 Patent") (collectively, the three patents are the "Asserted Patents" and the asserted claims among the patents shall be referred to as the "Asserted Claims").

3. I previously submitted a declaration in this matter addressing non-infringement and invalidity of Claims 17-21 of the '385 Patent, and Claims 14-15 of the '681 Patent ("First Rebuttal Declaration"). At the time I submitted my First Rebuttal Declaration, the '922 Patent had not yet issued.

4. I understand that the '922 Patent issued on February 10, 2026. I further understand that, on February 27, 2026, Whirlpool submitted an expert declaration by Dr. Emady Tanbour ("Tanbour '922 Declaration"), primarily addressing alleged infringement of Claims 1-4 and 7-25 of the '922 Patent ("'922 Asserted Claims") by the Accused Products. This declaration responds to the Tanbour '922 Declaration and also provides my opinions regarding invalidity of the '922 Patent in view of prior art.

A. Background And Qualifications

5. My First Rebuttal Declaration describes my qualifications. First Rebuttal Declaration at ¶¶ 4-6. Further details about my education and professional experience are found in my current curriculum vitae ("CV"), attached as Exhibit A to the above-referenced declaration.

B. Compensation

6. I am being compensated at my usual rate of $590 per hour, for my analysis. My compensation does not depend on the outcome of this proceeding.

C. Materials Considered

7. In preparing this declaration, I have considered the Asserted Patents, including their specifications, claims, and figures; the references cited by the Asserted Patents; the prosecution histories of the Asserted Patents, the prior art references I identify in this declaration; documents concerning the Accused Products; and the Tanbour '922 Declaration (including all materials cited therein). In addition, my opinions are further based on my education, training, experience, and knowledge in the relevant field.

II. SUMMARY OF OPINIONS

8. This declaration sets forth the opinions I have formed, the conclusions I have reached, and the bases for each. The following is a summary of my opinions set forth in this declaration.

9. First, it is my opinion that Samsung does not infringe any of the '922 Asserted Claims. In particular, there is no infringement because Samsung's Accused Products do not satisfy at least the following limitations of the '922 Asserted Claims, and Whirlpool and the Tanbour '922 Declaration have failed to demonstrate otherwise:

- "wherein the planar portion includes a plurality of utensil holders configured to horizontally support utensils" (Claim 1, and incorporated in dependent Claims 2-4 and 7-25);

- "the upper dish rack defining a planar portion and a depression, wherein the depression includes a first angled wall and a second angled wall" (Claim 1, and incorporated in dependent Claims 2-4 and 7-25);
- "wherein the utensil caddy includes a diffuser that diffuses the spray of water emitted by the at least one sprayer" (Claim 13).

10. Second, it is my opinion that the '922 Asserted Claims are anticipated under 35 U.S.C. § 102, and/or would have been obvious under 35 U.S.C. § 103 on the following grounds:

- Claims 1-4 are anticipated by and/or obvious over Carr;
- Claims 1-4 are anticipated by and/or obvious over the Bosch 800 Series Dishwasher;
- Claims 1-3 are anticipated and/or obvious over Mailander; and
- Claims 1-4 and 7-26 are obvious over Andrew, in view of Carr.

III. THE ASSERTED '922 PATENT

A. Overview

11. The '922 Patent was filed August 12, 2025, published November 27, 2025, and issued February 10, 2026. '922 Patent, Cover. The '922 Patent claims priority, through a series of continuation applications, to March 30, 2020. *Id*.

12. The '922 Patent belongs to the same patent family as the asserted '681 Patent, and shares a specification and figures with the '681 Patent. *Id.* (priority claim identifying "application No. 18/535,327, filed on December 11, 2023, now Pat. No. 12,232,681"). In my First Rebuttal Declaration, I presented an overview of the '681 Patent's specification, which also applies to the '922 Patent. First Declaration, ¶¶ 27-36. Therefore, in the discussion below, I focus on the relevant differences between the asserted claims of the '681 Patent and the asserted claims of the '922 Patent.

13. I understand that Whirlpool has accused Samsung of infringing Claims 1-4 and 7-25 of the '922 Patent. These claims are reproduced below:

1. A dishwasher comprising:

a tub defining a dish treating chamber;

a first lower dish rack and a second lower dish rack located in the dish treating chamber;

an upper dish rack located above the first lower dish rack and the second lower dish rack in the dish treating chamber, the upper dish rack defining a planar portion and a depression, wherein the depression includes a first angled wall and a second angled wall that each extend at an acute angled relative to the planar portion, and

wherein the first angled wall defines a first set of cup seats, and wherein the second angled wall defines a second set of cup seats;

wherein the planar portion includes a plurality of utensil holders configured to horizontally support utensils; and

wherein the depression extends entirely below a top of the utensil holders in the planar portion.

2. The dishwasher of claim 1, wherein the plurality of utensil holders is disposed in a utensil caddy operably coupled to the planar portion.

3. The dishwasher of claim 2, wherein the utensil caddy includes a basket that is removably coupled with a bottom wall of the planar portion.

4. The dishwasher of claim 2, wherein the utensil caddy defines a periphery defining an interior with an open top.

7. The dishwasher of claim 2, further comprising:

at least one sprayer adjacent to the first set of cup seats and configured to emit a spray of water into a cup held by the first set of cup seats.

8. The dishwasher of claim 7, wherein the at least one sprayer is located between the first set of cup seats and the second set of cup seats.

9. The dishwasher of claim 7, wherein the at least one sprayer extends from a front of the upper dish rack to a back of the upper dish rack.

10. The dishwasher of claim 7, wherein the at least one sprayer is also configured to emit the spray of water into a cup held by the second set of cup seats.

11. The dishwasher of claim 7, wherein the at least one sprayer is configured to provide a straight-line stream of water.

12. The dishwasher of claim 7, wherein the at least one sprayer includes a plurality of spray nozzles, and wherein each of the spray nozzles is configured to rotate as the at least one sprayer emits the spray of water into the cup held by the first set of cup seats.

13. The dishwasher of claim 7, wherein the utensil caddy includes a diffuser that diffuses the spray of water emitted by the at least one sprayer.

14. The dishwasher of claim 7, wherein the at least one sprayer is configured to emit a straight-line steam of water to the planar portion of the upper dish rack.

15. The dishwasher of claim 7, wherein the at least one sprayer is configured to emit a fan pattern of water.

16. The dishwasher of claim 1, wherein the first set of cup seats is configured to support a set of cups and the second set of cup seats is configured to support a set of mugs.

17. The dishwasher of claim 7, wherein the at least one sprayer is located between the first set of cup seats and the second set of cup seats, the at least one sprayer configured to emit the spray of water into drinking vessels held by the first and second sets of cup seats.

18. The dishwasher of claim 7, wherein a portion of the spray of water emitted by the at least one sprayer is directed toward the plurality of utensil holders.

19. The dishwasher of claim 7, wherein the upper dish rack includes a wire frame construction that forms the first angled wall and the second angled wall.

20. The dishwasher of claim 19, wherein the wire frame construction also forms the planar portion and side walls of the upper dish rack.

21. The dishwasher of claim 19, wherein a plurality of spray nozzles of the at least one sprayer are located beneath the wire frame construction.

22. The dishwasher of claim 21, wherein the plurality of spray nozzles are configured to rotate during said dishwasher operation.

23. The dishwasher of claim 21, wherein the wire frame construction includes a raised section disposed between the first set of cup seats and the second set of cup seats.

24. The dishwasher of claim 23, wherein the plurality of spray nozzles are disposed below a portion of the raised section.

25. The dishwasher of claim 7, wherein a lowermost portion of the first set of cup seats and a lowermost portion of the second set of cup seats is disposed below the at least one sprayer.

14. Notably, the '922 Asserted Claims recite "wherein the planar portion ***includes*** a plurality of utensil holders." *See* '922 Patent, Cl. 1. This language differs from that of the asserted claims of the '681 Patent, which recite "the first [substantially horizontal planar] portion ***supporting*** a first set of utensil holders." *See* '681 Patent, Cl. 14. As I explain in detail below, based on this difference in language, it is my opinion that the '922 and '681 Patents' asserted claims are directed to different embodiments of their common specification.

15. For all embodiments described in the common specification, utensil holders are provided for use with the dish rack as part of a "utensil caddy." Annotated Figure 5B, below, illustrates an embodiment of the utensil caddy, as it exists uncoupled from the dish rack:

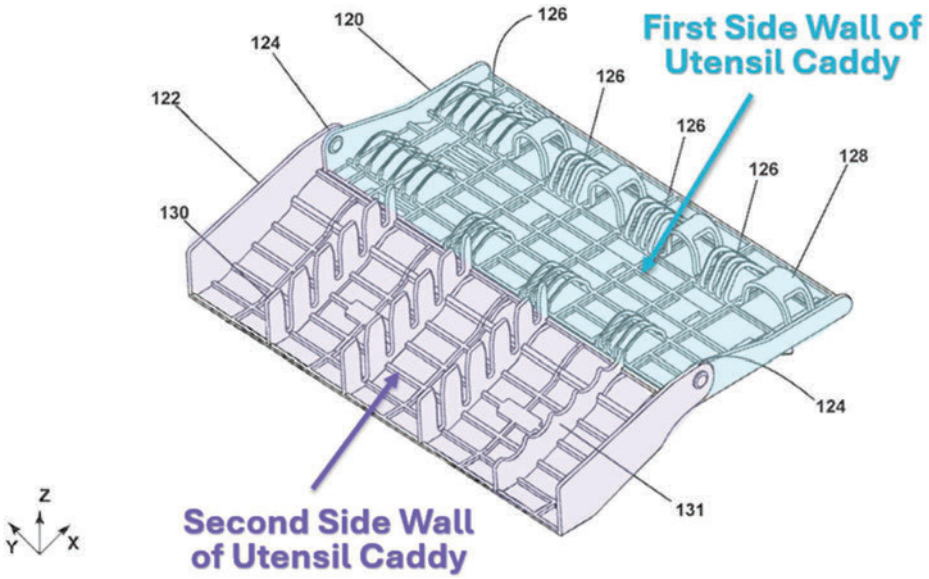

FIG. 5B

As described in the specification, the utensil caddy includes two "side walls"—a "first side wall 120" that "can include a first set of utensil holders illustrated as a set of utensil seats 126 or loops 128" ('922 Patent, 6:53-55), and a "second side wall 122" that can include "a second set of utensil holders illustrated as a pin 130 and a seat 131" (*id.*, 7:12-13).

16. The second side wall 122 of the utensil holder "can be configured to rotate along the Y-axis about [a] set of hinges 124 and with respect to the first side wall 120." '922 Patent, 7:1-3. Thus, as illustrated in Figures 4 and 5A, below, the specification teaches two configurations for the utensil holder—a "closed configuration" (illustrated in Figure 4 on the left), and an "open configuration" (illustrated in Figure 5A on the right):

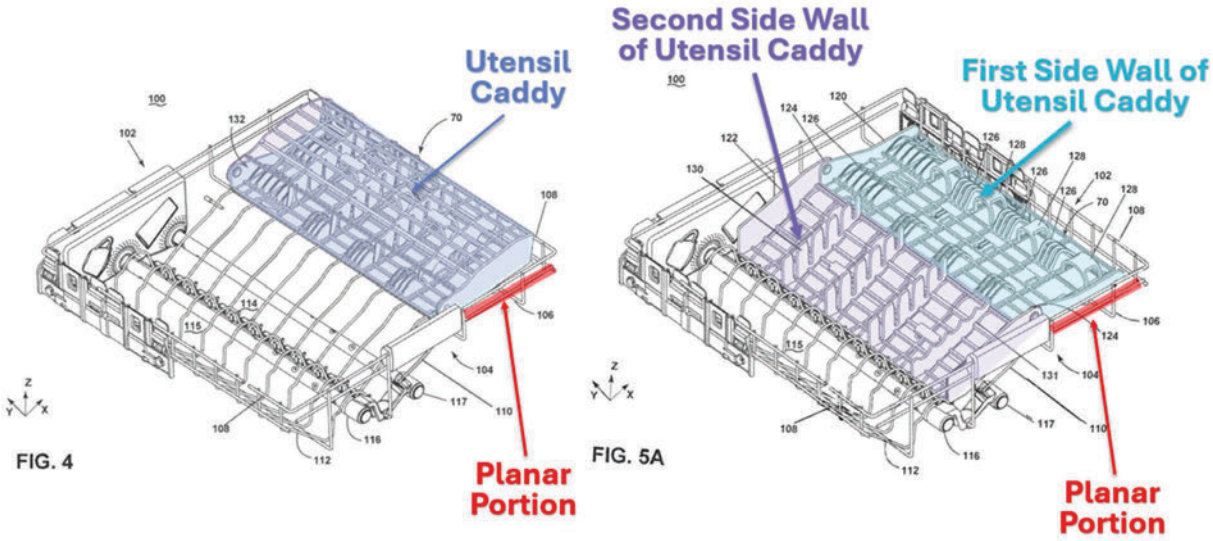

In the closed configuration, "at least a portion of the utensil caddy 70 abuts a portion of the bottom wall 104 and does not abut the first angled wall 110" of the dish rack. '922 Patent, 6:22-24. When the utensil caddy is in the closed configuration, both angled portions of the dish rack can be used to hold cups for washing, and the utensil holders of the utensil caddy are supported on the horizontal portion of the bottom wall of the rack.

17. On the other hand, in the open configuration, "at least a portion of the utensil caddy 70 is carried by, received on, or abuts a portion of the bottom wall 104, specifically the first angled portion 112." '922 Patent, 6:39-42. When the utensil caddy is in the open configuration, the first side wall of the utensil caddy is supported by the horizontal portion of the bottom wall, and the second side wall of the utensil caddy is supported by an inclined portion of the bottom wall. In this configuration, the angled portion of the bottom wall can be used to hold additional utensils for washing, at the expense of the loss of a set of cup seats.

18. All of the embodiments illustrated in the figures depict the utensil caddy as separate from the dish rack and mountable/mounted on top of a portion of the bottom wall of the dish rack. In describing these embodiments, the specification explains that the utensil caddy is separate from the bottom wall of the dish rack, and is configured to "rest on" or "be directly coupled to" a portion of the bottom wall of the dish rack. '922 Patent, 6:51-52. In particular, the specification explains that:

> The utensil caddy 70 can be received within a region of the dish rack 102 adjacent to a portion of the bottom wall 104, specifically the planar portion 106. It is contemplated that ***the utensil caddy 70 can be removably mounted to a portion of the dish rack 102, specifically the planar portion 106***. As such, the utensil caddy 70 can be moved to other portions of the dish rack 102 or to another dish rack 102 altogether.

'922 Patent, 6:1-8.

19. Additionally, the specification describes a variety of other embodiments that are not depicted in the accompanying figures. For instance, the specification describes embodiments in which the utensil caddy "***form[s] a portion of the bottom wall 104 of the dish rack 102, specifically, the planar portion 106.***" '922 Patent, 6:51-53. In particular, the specification distinguishes the aforementioned embodiments depicted in figures in which the utensil caddy rests on top of the planar portion of the dish rack, explaining that:

> Alternatively, at least a portion of the utensil caddy 70 can be ***integrally formed with the planar portion 106*** and hence the dish rack 102.

'922 Patent, 6:8-10.

20. Thus, the specification clearly distinguishes between embodiments in which utensil holders are merely *supported by* the planar portion of the bottom wall of the dish rack—like all of the embodiments depicted in the Figures, and embodiments in which utensil holders are *included in* the planar portion—i.e., are an integral part of the planar portion.

B. Prosecution History

21. As originally filed, Claim 1 of the '922 Patent recited:

> 1. A dishwasher, comprising:
>
> a tub defining a dish treating chamber;
>
> a first lower dish rack and a second lower dish rack located in the dish treating chamber;
>
> an upper dish rack located above the first lower dish rack and the second lower dish rack in the dish treating chamber, the upper dish rack defining a planar portion and a depression, the depression extending below the planar portion, wherein the depression includes a first angled wall and a second angled wall that each extend at an acute angle relative to the planar portion, and wherein the first angled wall defines a first set of cup seats, and wherein the second angled wall defines a second set of cup seats; and
>
> a plurality of utensil holders disposed in the planar portion, the plurality of utensil holders configured to horizontally support utensils.

Ex. N ('922 Prosecution History) at 1209.

22. On November 19, 2025, an Examiner-initiated interview took place, during which agreement was reached regarding an Examiner's amendment that was needed "to place application in condition for allowance based on prior art of record." *Id*. at 0226. The Examiner's amendment of Claim 1 is shown below. Notably, the amendment narrowed the claim from merely reciting that

"a plurality of utensil holders [are] disposed in the planar portion," to requiring that "the planar portion ***includes*** [the] plurality of utensil holders":

> 1. A dishwasher, comprising:
>
> a tub defining a dish treating chamber;
>
> a first lower dish rack and a second lower dish rack located in the dish treating chamber;
>
> an upper dish rack located above the first lower dish rack and the second lower dish rack in the dish treating chamber, the upper dish rack defining a planar portion and a depression, ~~the depression extending below the planar portion,~~ wherein the depression includes a first angled wall and a second angled wall that each extend at an acute angle relative to the planar portion, and
>
> wherein the first angled wall defines a first set of cup seats, and wherein the second angled wall defines a second set of cup seats; ~~and~~
>
> wherein the planar portion includes a plurality of utensil holders ~~disposed in the planar portion, the plurality of utensil holders~~ configured to horizontally support utensils; and
>
> wherein the depression extends entirely below a top of the utensil holders in the planar portion.

Id. at 0135.

23. On December 10, 2025, the amended claims were allowed. *Id.* at 0217. In providing the reasons for allowance, the Examiner explained that, while the closest prior art (U.S. Patent App. Pub. No. 2015/0245762 ("Tuller")) "discloses a rack having … central portions [] which may hold utensils thereon," it did not disclose "wherein the planar portion ***includes*** a plurality of utensil holders":

Allowable Subject Matter

5. Claims 1-26 are allowed.

The following is an examiner's statement of reasons for allowance: each of the claimed features of independent claim 1, from which all other claims depend from are not taught or disclosed by the prior art of record. The closest prior art of record, Tuller (USPPN 2015/0245762) at Fig. 8 discloses a rack having inclined portions 67 for holding glassware, for example, and central portions 65 which may hold utensils thereon. Tuller does not disclose the planar portion and depression as claimed in which "wherein the planar portion includes a plurality of utensil holders configured to horizontally support utensils; and wherein the depression extends entirely below a top of the utensil holders in the planar portion" in combination with the other features of claim 1. Upon further search and consideration, the identified claims are allowed.

Id. at 0136. Figure 8 of Tuller, identified by the Examiner as disclosing "central portions 65 which may hold utensils thereon," is reproduced below:

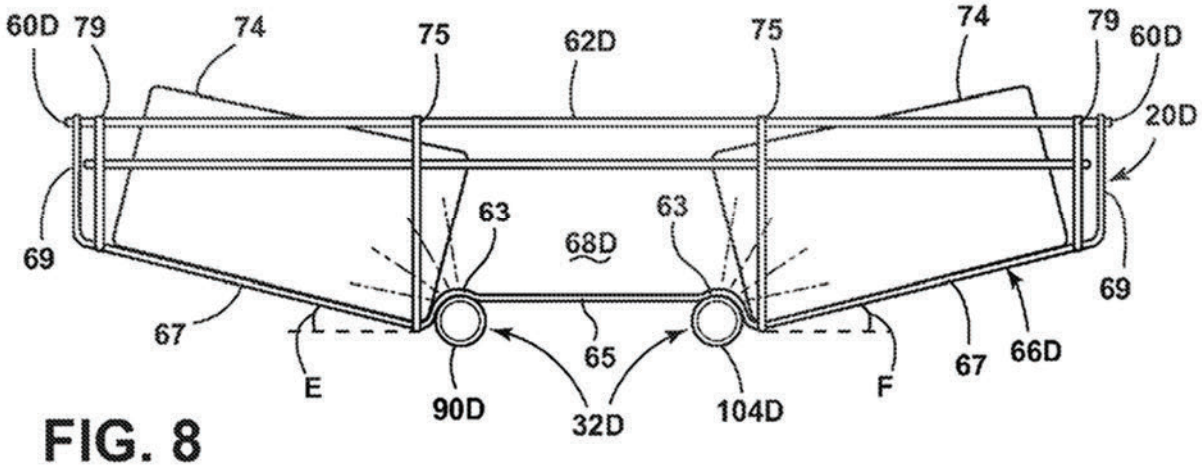

FIG. 8

Ex. O (U.S. Patent Appl. No. 2015/0245762 ("Tuller")), Fig. 8. Tuller explains that "[t]he flat central portions 65 provide an area between the first and second rows defined by the inclined portions 67 to define a third row to provide a location to place additional items to be cleaned, such as glasses, cutlery, cooking utensils, dishes, plates, pots, bowls, pans, lids, containers, glassware, and silverware. The items to be cleaned in the third row are supported by the adjacent flat central

portions 65 of the bottom walls 66D." Tuller, ¶ 39; *see also id.*, ¶ 6 ("[T]he glasses dish rack may be adapted to hold utensils and other types of dishes in combination with the inclined glasses.").

24. Tuller further teaches that a "silverware basket" may be added to the rack:

> Dish holders, illustrated in the form of upper, middle, and lower dish racks 20, 22, 24, may be located within the treating chamber 16 and receive dishes for treatment, such as washing. … Other dish holders may be provided, such as **a silverware basket, separate from or combined with the upper, middle, and lower racks 20, 22, 24**. As used in this description, the term 'dish(es)' is intended to be generic to any item, single or plural, that may be treated in the dishwasher 10, including without limitation, dishes, plates, pots, bowls, pans, glassware, and silverware.

Tuller, ¶ 19.

25. Thus, the closest art identified by the Examiner specifically taught a horizontal planar portion of a dish rack that could support a silverware basket, which the applicant distinguished from the amended, issued claims requiring "wherein the planar portion ***includes*** a plurality of utensil holders."

IV. THE ACCUSED SAMSUNG PRODUCT

26. My First Rebuttal Declaration provides a detailed description of the Accused Product. *See* First Rebuttal Declaration at ¶¶ 41-43.

V. OVERVIEW OF THE RELEVANT PRIOR ART

A. Carr

27. Carr (U.S. Patent Publication No. 2018/0220867) was published August 9, 2018, and is prior art to the '922 Patent under 35 U.S.C. § 102(a)(1). Carr was attached as Exhibit E to my First Declaration.

28. Carr was disclosed in an Information Disclosure Statement ("IDS") by Whirlpool. The patent application was filed on August 12, 2025 and the IDS disclosing Carr was filed August

26, 2025. Although the reference was disclosed to the Examiner, it was not applied to the claims as a part of a substantive office action.

29. Carr teaches a dishwasher appliance 100 (blue, below). Carr, [0037]. Carr discloses that "as is known in the art, the dishwasher appliance 100 includes a tub, a pump and filter assembly, a heating element, one or more wash arms, and a drain hose." Carr, [0037]. Carr provides a "dishwasher, comprising: a dishwashing compartment having a loading opening." Carr, [0010]; *see also id*., [0013]. Figure 1, annotated below, shows Carr's dishwashing appliance (blue) "with the door open so as to reveal the dishwashing compartment," colored in purple. Carr, [0028].

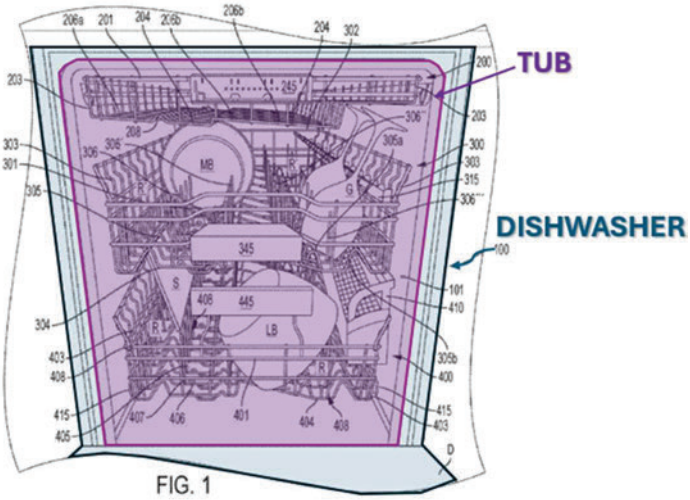

30. Carr's dishwasher includes a "top washware rack configured for movement out of and into the dishwashing compartment." Carr, [0013]. The top washware rack, shown in Figures 1 and 4 below, is "formed of wire thereby to hold washware including cutlery and washware larger than cutlery and to enhance drying performance." Carr, [0013]. Carr's "top washware rack 200 is configured as a basket and includes front 201, rear 202, and opposing side walls 203 interconnected with a bottom portion 204." Carr, [0041].

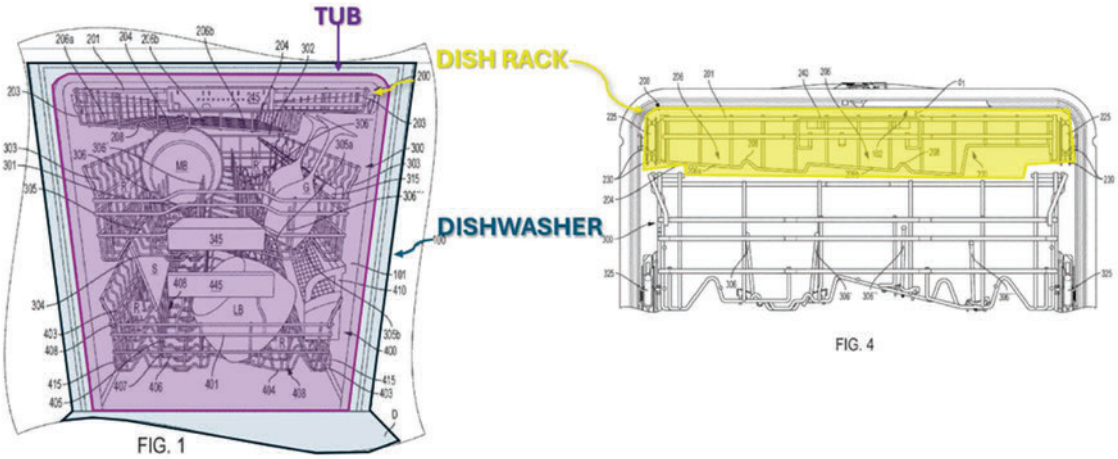

31. As shown in Figure 4, "top washware rack 200 is formed with a notch section 220 along at least one side … in the bottom portion 204." Carr, [0047]. Notch section 220 (red, below) accommodates "at least one of cutlery or utensils" (Carr, [0018]) and allows the middle dish rack to accommodate stemmed wine glasses (Carr, [0047]). As shown in Figure 3, a cutlery/utensil accessory insert 235 is shown disposed above the notch section 220. *Id.*, [0048].

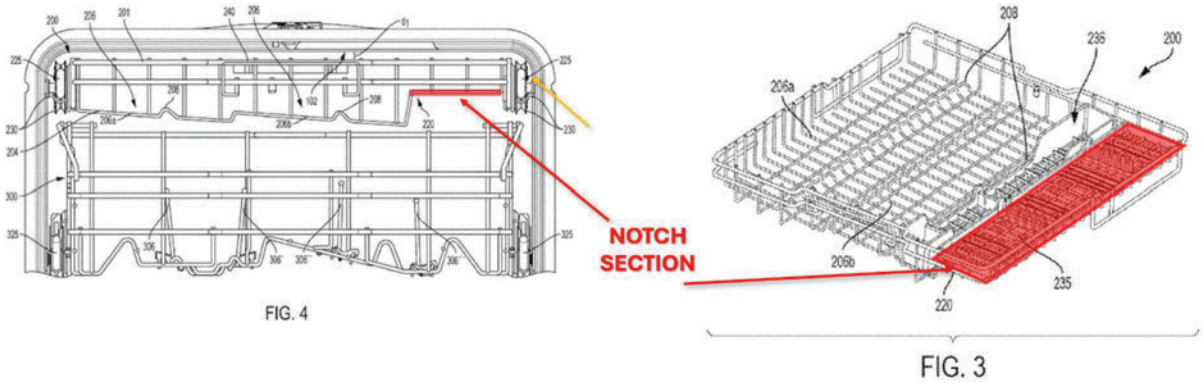

32. The bottom portion 204 of washware rack 200 "includes one or more angled portions 206 that is/are configured to hold bowls at a slight tilt with respect to horizontal in order to drain off water from the bowls." Carr, [0043]. Carr discloses that the angled portion 206 is "tilted at an angle in a range of 3 to 5 degree with respect to horizontal, and preferable is tilted at an angle of approximately 4 degrees with respect to horizontal." *Id.* Each angled portion is

"configured to hold bowls" at a slight tilt in order to drain water off from the bowls. Carr, [0043]-[0044].

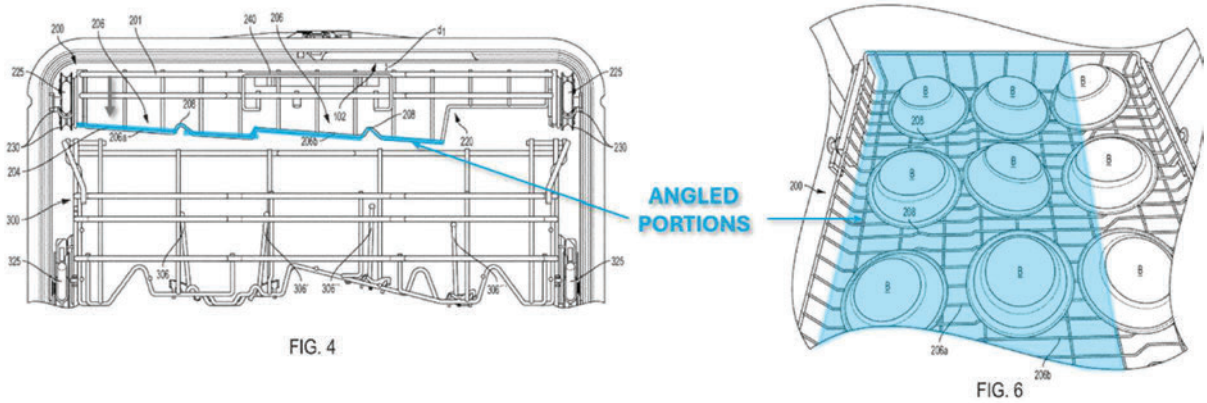

33. In my opinion, Carr discloses and/or renders obvious asserted claims of the '922 Patent. The bases for my opinions are detailed below in Section VIII.

B. Bosch 800

34. Bosch 800 is a series of prior art dishwasher products (including e.g., the Bosch 800 Series Premium Dishwasher (SHPM88Z75N)) that was publicly available by no later than February 2019. In particular, the customer brochure for the Bosch 800 Series Dishwasher ("Brochure") was published in 2019. That Brochure was attached as Exhibit F to my First Declaration. Page 26 of the Brochure includes a copyright date of 2019. Based on press releases from the relevant time period, the dishwasher itself was available for purchase at least as early as May 2013:

- "Bosch Takes Silence to the Next Level with Innovative Dishwasher Line" available at https://www.bosch-home.ca/en/press/pressrelease-320, explaining that "Bosch has made the 800 Plus, the quietest dishwasher in **North America**."
- "New Bosch Dishwashers Have Arrived At Grand," available at https://grandapplianceandtv.wordpress.com/2013/05/31/new-bosch-dishwashers-

have-arrived-at-grand, explaining that the new Bosch dishwashers included a new and improved third rack.

- "Four new Bosch dishwashers added to our list of top picks" available at https://www.consumerreports.org/cro/news/2013/07/four-new-bosch-dishwashers-added-to-our-list-of-top-picks/index.html, explains that "[t]he other newly recommended Bosch dishwashers…, which has three racks"
- "Bosch Home Appliances Revolutionizes Dishwasher Category with New Advanced Drying Technologies" available at, https://www.globenewswire.com/news-release/2019/02/19/ 1734216/0/en/Bosch-Home-Appliances-Revolutionizes-Dishwasher-Category-with-New-Advanced-Drying-Technologies.html explains that the Bosch 800 was available for purchase at least as early as February 19, 2019 "with the introduction of its new CrystalDry™ and AutoAir™ drying technologies."
- "Bosch Home Appliances Re-imagines Kitchen Cleanup with New Dishwasher Line' available at, https://www.bosch-home.com/us/press/pressrelease-448 explains that the Bosch 800's MyWay Rack was available for purchase as early as May 7, 2017.
- "Bosch Dishwasher with the MyWay Rack" available at, https://www.jeffersmcgill.com/blog/bosch-dishwasher-myway explains that the Bosch 800's MyWay Rack was available for purchase as early as April 5, 2017.

Thus, Bosch 800 is prior art to the '922 Patent under 35 U.S.C. § 102(a)(1).

35. Details of the Bosch 800 dishwasher are described and shown in the Bosch Brochure published in 2019 and the video titled, "Bosch 800 Series Dishwasher SHPM88Z75N" (available at https://www.youtube.com/watch?v=2I-i2s7Jjv4) ("Dishwasher video").

36. Documents relating to the Bosch 800 were disclosed in an IDS by Whirlpool. The patent application was filed on August 12, 2025 and the IDS disclosing the Bosch 800 related documents was filed December 15, 2025. The December 15, 2025 disclosure came after a Notice of Allowance was published on December 10, 2025.

37. Bosch 800 teaches an automatic dishwasher configured to implement an automatic treating cycle of operation. Specifically, Bosch 800 includes advanced cleaning with "Precision Wash," which allows a user to "simply start [the] dishwasher and walk away." Brochure, 8. Bosch 800 uses "intelligent sensors" that "scan and check the progress of dishes throughout the cycle, and powerful, precision spray arms go to work targeting every item of every load." *Id*., 34.

38. Bosch 800 includes a third rack, "MyWay rack," which "easily fits those hard-to-place items like cereal bowls and large utensils." Brochure, 17. "Unlike traditional 3rd racks, the MyWay rack offers more room for more kinds of items, such as cereal bowls, whisks, tongs, and large measuring cups, creating more freedom in loading below." *Id*. By putting things like bowls and lids "up top instead of in the bottom rack, it frees up more space for your larger pots and pans." *Id*.

39. Bosch 800 includes a third rack of the same configuration as disclosed by Carr, above. Specifically, Carr was filed by and assigned to "BSH Hausgeraete GmBH" and "BSH Home Appliances Corp," which is a subsidiary of Bosch (manufacturers of Bosch 800). *See* Carr, (71). It is my understanding that BSH Home Appliances Corp. is wholly owned by the Bosch

Group, which is the Bosch brand in North America. *See, e.g.*, "Our Complete Global Brand Portfolio," available at https://www.bsh-group.com/us/about-bsh/company-portrait.

MyWay™ rack

MyWay™ offers more room for more kinds of items in the top rack, such as cereal bowls, whisks, tongs, and large measuring cups, creating more loading freedom below.

40. In my opinion, Bosch 800 discloses and/or renders obvious asserted claims of the '922 Patent. The bases for my opinions are detailed below in Section VIII.

C. Andrew

41. Andrew (U.S. Patent No. 2,910,207) issued October 27, 1959, and is prior art to the '922 Patent under 35 U.S.C. § 102(a)(1). Ex. P ("Andrew").

42. Andrew was disclosed in an Information Disclosure Statement ("IDS") by Whirlpool. The patent application was filed on August 12, 2025 and the IDS disclosing Andrew was filed September 10, 2025. Although the reference was disclosed to the Examiner, it was not applied to the claims as a part of a substantive office action.

43. Andrew teaches a "dishwasher or dishwashing machine includ[ing] a cabinet 10 [(blue, below)] having a washing compartment 11 [(purple, below)] therein for receiving utensils[1] to be washed." *Id.*, 2:39-41. The dishwasher teaches a dish rack "with an improved and versatile supporting means for holding utensils in a compact manner and arranging the utensils held thereby in positions relative to a liquid spray tube." *Id.*, 1:44-48.

[1] Andrew uses the term "utensils" broadly in its specification, clarifying it includes "for example, [] metal knives, forks, spoons, pans or bowls and ceramic dishes or glassware such as coffee or tea cups, saucers, plates, tumblers, and drinking glasses or culinary items of different kinds." Andrew, 2:33-37.

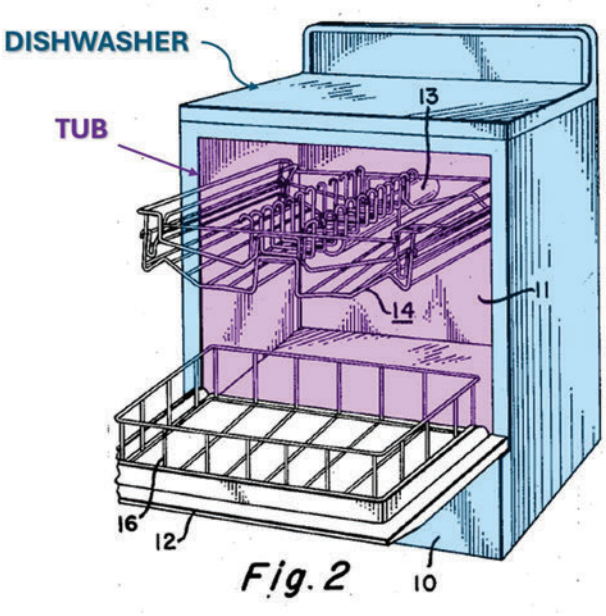

44. Andrew explains that "[u]pper and lower separate and independent racks, generally represented at 14 and 16, respectively, are slidably mounted . . . within compartment 11." *Id.*, 2:47-50. The upper rack "provide[s] a utensil rack for a dishwashing machine in the form of an open basket-like receptacle provided with . . . sub-receptacles or supports for receiving and selectively supporting various types of utensils." *Id.*, 1:51-55. Upper rack 14 is generally constructed of "metal wire." *Id.*, 2:69-71; *see also id.*, 4:13-17. Andrew's Figure 1, annotated below, show the upper rack 14 (green) within dishwasher cabinet 10 (purple).

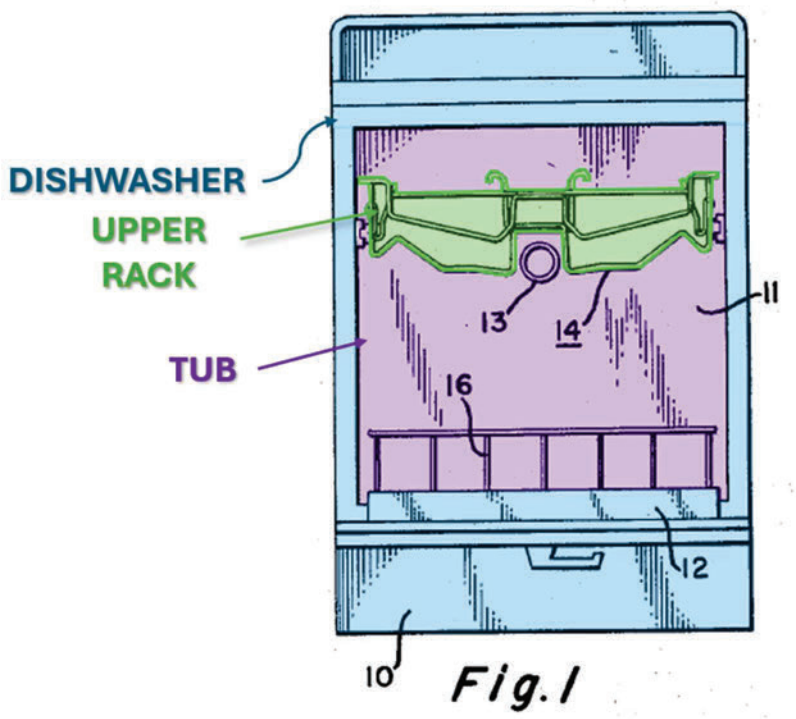

45. Andrew's upper rack 14 has "U-shaped wire members spaced apart along the two elevated central rails 34 with the base 36 of these members spanning and being welded thereto." *Id.*, 3:35-38. Outside of the elevated central rails 34 are wire rails 33 which "provid[e] the bordering portions of the basket-like receptacle, are progressively elevated with respect to one another . . . to provide inclined bottom portions therefor." *Id.*, 3:25-28. The design further allows for "utensils placed on the rails 33 of the bottom portions of the rack." *Id.*, 3:43-45. As can be seen in Figure 5, annotated, below, first rail 33 (blue) and second rail 33 (yellow) may support utensils, such as cups, at an inclined angle.

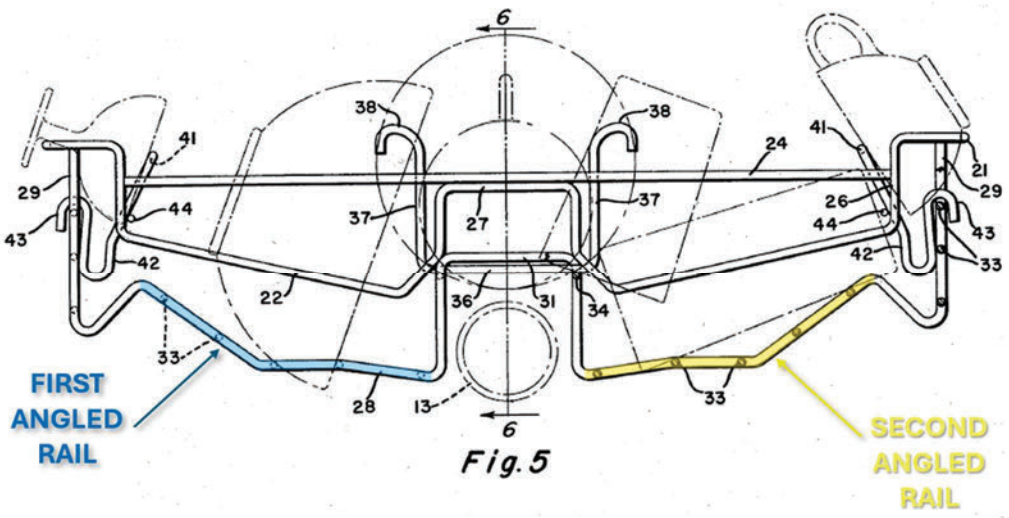

46. The "[b]ase portion 35 of the U-shaped wire members extends transversely across the two central rails 34 and . . . provides a flat support on rack 14. . . . This flat support and the supports or posts 37 cooperate with one another to selectively receive and support long knives or the like in a horizontal position." *Id.*, 3:45-52. Andrew adds that the "rack is flexible and versatile" and that it can accommodate "widely diversified arrangements or combinations of utensil support" without diverging from the scope of the invention. *Id.*, 60-68. The flat support section (red) for holding knives, and the like, can be seen in Figures 5 and 7, annotated below.

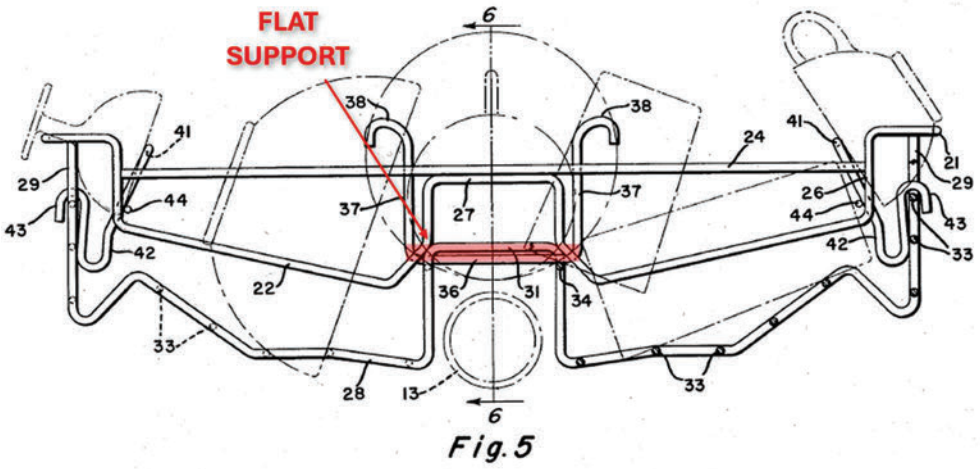

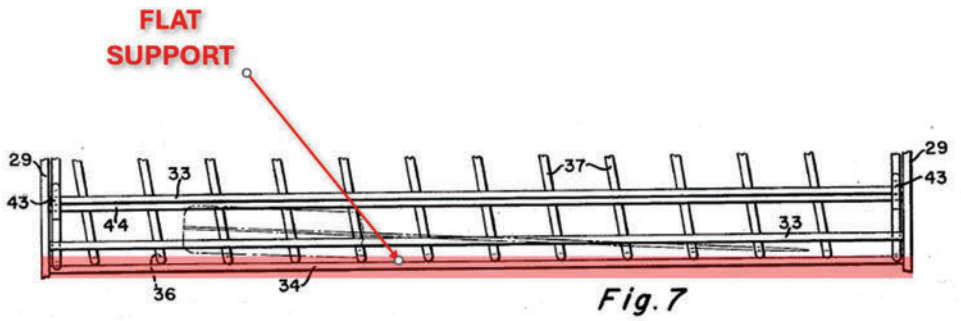

47. In my opinion, Andrew renders obvious asserted claims of the ’922 Patent. The bases for my opinions are detailed below in Section VIII.

D. Mailander

48. Mailander (U.S. Patent Publication No. 2008/0169009) was published July 17, 2008, and is prior art to the ’922 Patent under 35 U.S.C. § 102(a)(1). Mailander was attached as Exhibit G to my First Declaration.

49. Mailander was disclosed in an IDS by Whirlpool. The patent application was filed on August 12, 2025 and the IDS disclosing Mailander was filed December 15, 2025. The December 15, 2025 disclosure came after a Notice of Allowance was published on December 10, 2025.

50. Mailander teaches “a washing items support for a dishwasher.” Mailander, [0001]. Mailander explicitly claims a “dishwasher,” which includes “a washing space that can be sealed by a door, the washing space having at least one spraying device and at least one removable crockery basket therein; and a washing items support assembly disposed in the washing space.” Mailander, Cl. 22. Mailander’s washing items support is arranged above a cutlery basket in order to prevent “formation of accumulations of water in the spoon lips or the like because the cutlery lying on its side during washing and drying and not mutually touching,” which can “also considerably shorten the drying programme time.” Mailander, [0007].

51. In certain embodiments, Mailander's washing item support 10 "has a base basket 11 produced from a surrounding wire frame 12, a few base wires 13 running continuously in the transverse or longitudinal direction being located in its base region." Mailander, [0028]. Mailander's washing item support 10 includes two container regions, first and second container region 14 and 15, "each of them occupying half width B of washing items support 10." Mailander, [0025]. As shown in Figure 1 below, the first container region 14 (red) is configured to "arrange pieces of cutlery 4 . . . , lying one next to the other, . . . throughout the depth of washing items support 10." *Id.*, [0026].

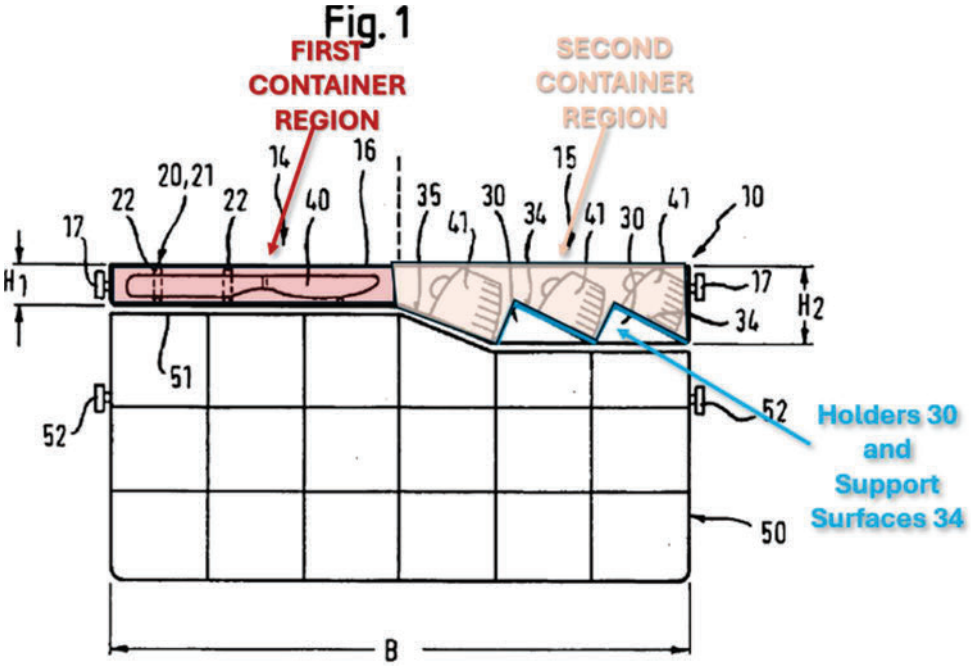

52. Washing items support 10 includes second container region 15 (peach), which is "designed with washing items holders 30, each of which has a support surface 34 inclined to the horizontal," so that pieces of crockery can be placed at an angle for an increased drying effect. Mailander, [0027]. Pieces of crockery include "smaller washing items, e.g. cups, shallow glasses, dessert bowls, or alternatively cutlery in the transverse and longitudinal directions, long knifes, cooking spoons etc." *Id.* Mailander teaches that washing items holders 30 and support surface 34

may be inserts or "may be formed integrally together." *Id.* Mailander also teaches that the "incline" or angle of "support surface 24 of washing goods holder 30 may also be adjustable." *Id.*

53. Mailander also teaches embodiments in which washing item holders 30 form part of the bottom wall itself, explaining that "[i]n a further embodiment, not shown, washing items support 10 may consist of only one material, e.g. a plastic, i.e. without base basket 11." *Id.*, ¶28. A POSITA would have understood that, in such alternative embodiment, the inclined surfaces of each of Mailander's washing items support 30 correspond to the bottom wall of Mailander's rack, as illustrated below:

Fig. 1

Modified to illustrate alternative embodiment

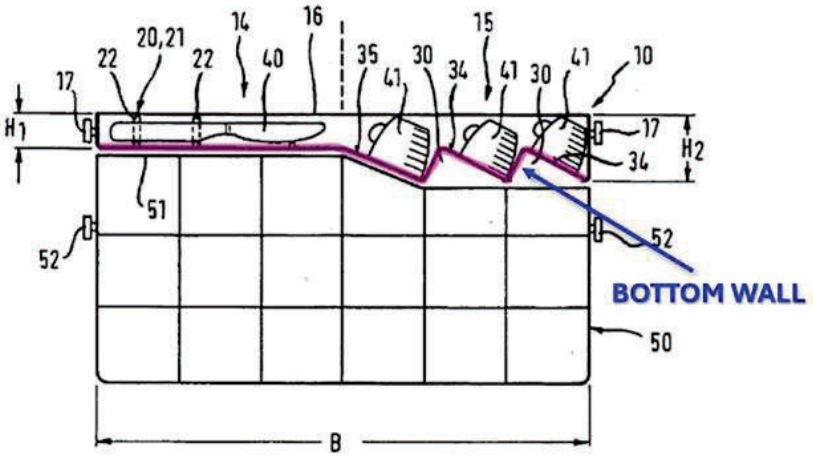

54. Mailander's washing items support 10 has, "in the second container region, a height H2 which is greater than height H1." Mailander, [0029]. Mailander teaches that the "bottom end of first container region 14 is higher in the vertical direction than the bottom end of second container region 15 in the vertical direction." *Id.* Mailander further teaches that the second container region 15 is provided with a "transition region," which "represents a support surface 35." Mailander, [0029]. Transition region 35 "represents an integral part of the adjacent washing items

holder 30" and is angled in order to transition from the first container region height H1 to the second container region height H2. *Id.*

55. In my opinion, Mailander discloses and/or renders obvious asserted claims of the '922 Patent. The bases for my opinions are detailed below in Section VIII.

VI. LEVEL OF ORDINARY SKILL IN THE ART

56. As I explained in my First Rebuttal Declaration, it is my opinion that one of ordinary skill in the art around the time of the alleged inventions of the Asserted Patents would have had at least a bachelor's degree in mechanical engineering or a related field, and 2 years of experience in the design or development of consumer appliances, including dishwashers or comparable fluid-delivery systems, with additional education substituting for experience and vice versa. *See* First Rebuttal Declaration at ¶¶ 76-78.

57. I understand that, in his declaration in reply to my First Rebuttal Declaration ("Tanbour Reply Decl."), Dr. Tanbour has offered a different standard for a POSITA, contending that "a POSITA would be an individual who has an undergraduate degree in mechanical engineering or a related field, or their equivalent, plus at least six years of experience working in appliance design." Tanbour Reply Decl., ¶ 47. While I disagree with Dr. Tanbour's position, I would still qualify as a POSITA under Dr. Tanbour's standard, and none of my opinions would be different under his standard.

VII. NON-INFRINGEMENT OF THE '922 ASSERTED PATENT

A. Samsung Does Not Infringe Claim 1 of the '922 Patent

1. The Accused Product does not include a "planar portion" that "*includes* a plurality of utensil holders"

58. As excerpted in the table below, Claim 1 of the '922 Patent recites a dish rack that includes "a planar portion" that "***includes*** a plurality of utensil holders":

Claim 1	… an upper dish rack located above the first lower dish rack and the second lower dish rack in the dish treating chamber, the upper dish rack defining a planar portion and a depression, … wherein **the planar portion includes a plurality of utensil holders** configured to horizontally support utensils…

Thus, by its plain language, Claim 1 requires that the planar portion of the dish rack not merely support a set of utensil holders (i.e., a set of utensil holders that is separate from, and rests on the dish rack), but rather ***include*** the utensil holders within the planar portion itself (i.e., meaning the utensil holders are integrated into the planar portion structure).

59. The Accused Product does not meet this requirement because the accused utensil holders are separate from the planar portion of the bottom wall of the dish rack, and do not form part of the bottom wall:

https://www.samsung.com/us/home-appliances/dishwashers/rotary/38-dba-bespoke-auto-open-door-dishwasher-with-3rd-rack-washing-system-in-fingerprint-resistant-stainless-steel-dw90f89p0usraa/

[redacted]

60. As I explained in Section III.A, the specification of the '922 Patent distinguishes between embodiments in which a plurality of utensil holders are separate from the bottom wall of the dish rack, and are configured to "rest on," "be directly coupled to," or "abut" the planar portion of the bottom wall ('922 Patent, 6:25, 51-52), and alternative embodiments in which the utensil holders are "integrally formed with the planar portion" of the bottom wall (*id.*, 6:51-53). A POSITA would understand that the claim language, "the planar portion ***includes*** a plurality of utensil holders" refers to these latter embodiments.

61. Indeed, during prosecution of the '922 Patent, the Examiner allowed the claims only after the applicant agreed to an Examiner's amendment to overcome the prior art. That Examiner's amendment of Claim 1 replaced the claim language:

"a plurality of utensil holders ***disposed in*** the planar portion"

with the claim language:

"wherein the planar portion ***includes*** a plurality of utensil holders."

Ex. N (Prosecution History of the '922 Patent) at 0226, 0135. A POSITA would have understood that the phrase "disposed in the planar portion" in the *pre*-amendment claims was broad enough to

encompass utensil holders merely resting on the planar portion. In contrast, the phrase "the planar portion includes" in the amended and issued Claim 1 is narrower, requiring the utensil holders to be part of the planar portion of the dish rack, itself.

62. Indeed, in stating the reasons for allowance, the Examiner identified Tuller (U.S. Patent Pub. No. 2015/0245762) as the closest prior art of record. Figure 8 of Tuller depicts a dish rack with a planar portion 65 between two angled portions 67:

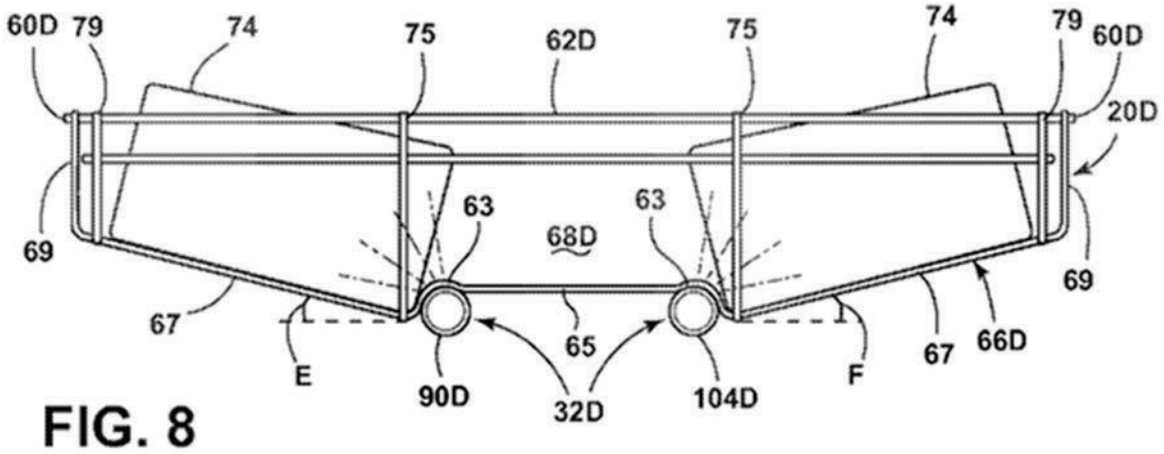

FIG. 8

As the Examiner noted, Fig. 8 of Tuller "discloses a rack having inclined portions 67 for holding glassware, for example, and central portions 65 which may hold utensils thereon." Ex. N (Prosecution History of the '922 Patent) at 0136. Indeed, Tuller specifically contemplates that "a silverware basket, separate from or combined with the upper, middle and lower racks" may be provided with Tuller's disclosed dish racks. Tuller, ¶ 19. Thus, Tuller plainly teaches a planar portion of a dish rack that is configured to *support* utensil holders. That the Examiner allowed the claims only after an amendment to distinguish Tuller's arrangement and to clarify that the planar portion must *include* the utensil holders supports that the Accused Product's structure and arrangement, which is materially similar to Tuller's distinct planar portion and utensil holders, does not infringe.

2. The Accused Product does not include "an upper dish rack" "defining a planar portion and a depression, wherein the depression includes a first angled wall and a second angled wall"

63. As excerpted in the table below, Claim 1 of the '922 Patent recites "an upper dish rack" that "defin[es] a planar portion and a depression, wherein the depression includes a first angled wall and a second angled wall," and "wherein the first angled wall defines a first set of cup seats, and wherein the second angled wall defines a second set of cup seats":

Claim 1	… an upper dish rack located above the first lower dish rack and the second lower dish rack in the dish treating chamber, **the upper dish rack defining a planar portion and a depression, wherein <u>the depression includes a first angled wall and a second angled wall</u>** that each extend at an acute angle relative to the planar portion, **and wherein the first angled wall defines a first set of cup seats, and wherein the second angled wall defines a second set of cup seats** …

Thus, by its plain language, Claim 1 differentiates between a planar portion and a depression in the rack, and defines the depression as including two angled walls, each of which defines a cup seat.

64. The Accused Product does not meet this limitation, because it does not include a single depression that defines two sets of cup seats. Rather, it includes two separate depressions, separated by a planar portion, where each depression defines a single set of cup seats, as illustrated below:

[redacted]

65. Notably, the intrinsic record repeatedly distinguishes between horizontal planar portions and depressions, treating them as separate structural features of the bottom wall. *See, e.g.*, '922 Patent, 5:47-50 ("While the bottom wall 104 can have any shape, including planar, the bottom wall 104 is illustrated as having a planar portion 106 and a depression defined by a first and second angled wall 110, 112."), 10:58-61 ("[T]he bottom wall further comprises a substantially planar portion extending across a first portion of the bottom wall and the depression extends across a second portion of the bottom wall."), 11:2-3 ("[T]he depression is defined by a second and a third planar portion angled with respect to the first planar portion."). Consistent with the specification and the language of the claim, a POSITA would understand that a depression is a *relative* structural feature—namely, a recessed or indented region defined with respect to the surrounding structure. The defining characteristic of a depression is its concave geometry, created where the surface slopes downward from one planar region and then transitions upward or outward again, forming a valley-like feature. Once the surface returns to a planar configuration, the depression ends.

66. As I confirmed, using the Computer-Aided Design file for the Accused Product (excerpted above), the Accused Product includes ***three*** planar portions, with separate depressions located between adjacent planar portions. In particular, in the Accused Product, the two right-most planar portions (as illustrated in the figure above) are perfectly horizontal and are positioned at approximately the same height. The angled walls between those two planar portions thus clearly define a depression relative to the surrounding planar portions of the dish rack, which is separate from the depression extending from the left-most planar portion. While that left-most planar portion is at a different height or level relative to the two right-most planar portions, a POSITA would not view a step-down, such as this, as defining a depression. Rather, as explained above, a

POSITA would understand a depression to correspond to a recessed or indented region relative to the surrounding structure. Thus, the left-most planar portion defines the left-boundary of another separate depression.

67. This arrangement differs from that of Figure 3 in the specification. In Figure 3 below, there is a single depression between the peripheral wall 108 (on the left) and the single planar portion 106 (on the right). This single depression by itself includes both sets of cup seats 114 and 115 and there is no intervening planar portion between the two sets of cup seats or within the single depression (i.e., where that planar portion would divide the depression into two depressions). This arrangement in Figure 3 matches the claim language, which recites how "the depression" has both first and second angled walls, where each angled wall defines a corresponding set of cup seats and each angled wall also extends at an angle relative to "the planar portion."

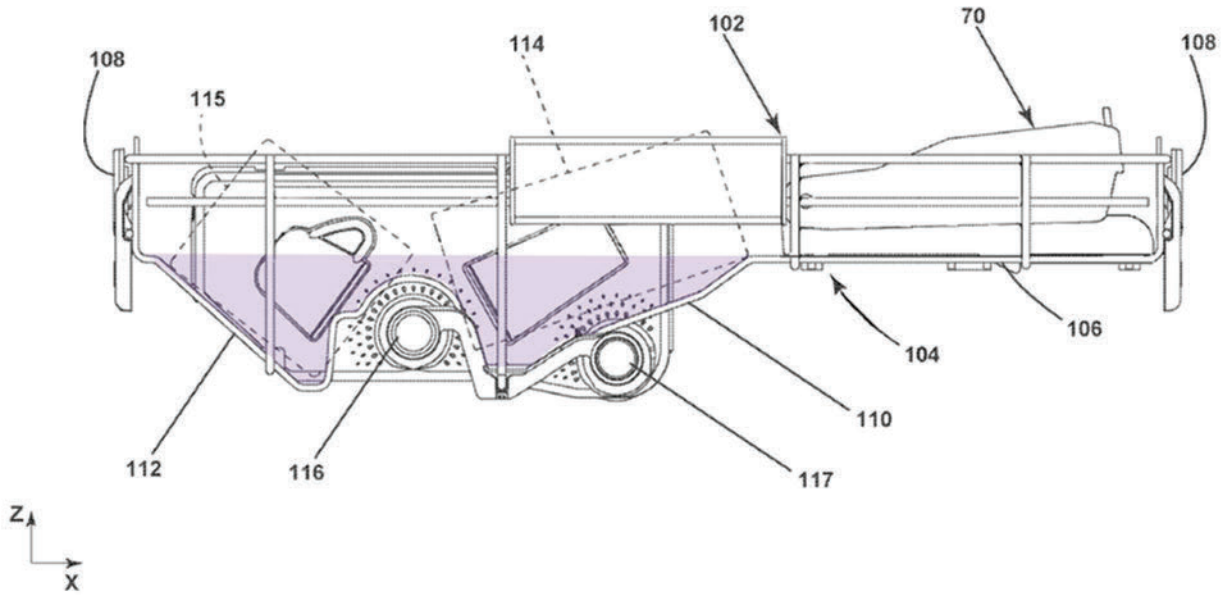

FIG. 3

68. By contrast, the Accused Product has multiple planar portions, at two different heights or levels, and those planar portions separate two distinct depressions. Thus, because the Accused Product includes two separate depressions, each of which is configured to hold a single row of glasses, it does not include a single depression that includes two sets of cup seats, as claimed.

B. The Accused Products Do Not Infringe Claims 2-4 and 7-25 of the '922 Patent

1. Samsung Does Not Infringe Claim 13

69. As illustrated in the table below, Claim 13 of the '922 Patent recites "a diffuser that diffuses the spray of water emitted by [] at least one sprayer":

Claim 13	13. The dishwasher of claim 7, wherein the utensil caddy includes **a diffuser that diffuses the spray of water emitted by the at least one sprayer**.

70. The Accused Product does not meet the requirements of Claim 13, at least because it does not include a utensil caddy that includes a diffuser.

71. In his declaration, Dr. Tanbour appears to map the claimed "diffuser" to the "side walls of the utensil caddy" in the Accused Product, as shown in the image below. Tanbour '922 Decl., ¶ 99 (red annotation). But that theory improperly equates a passive containment wall with a structure specifically configured to diffuse water.

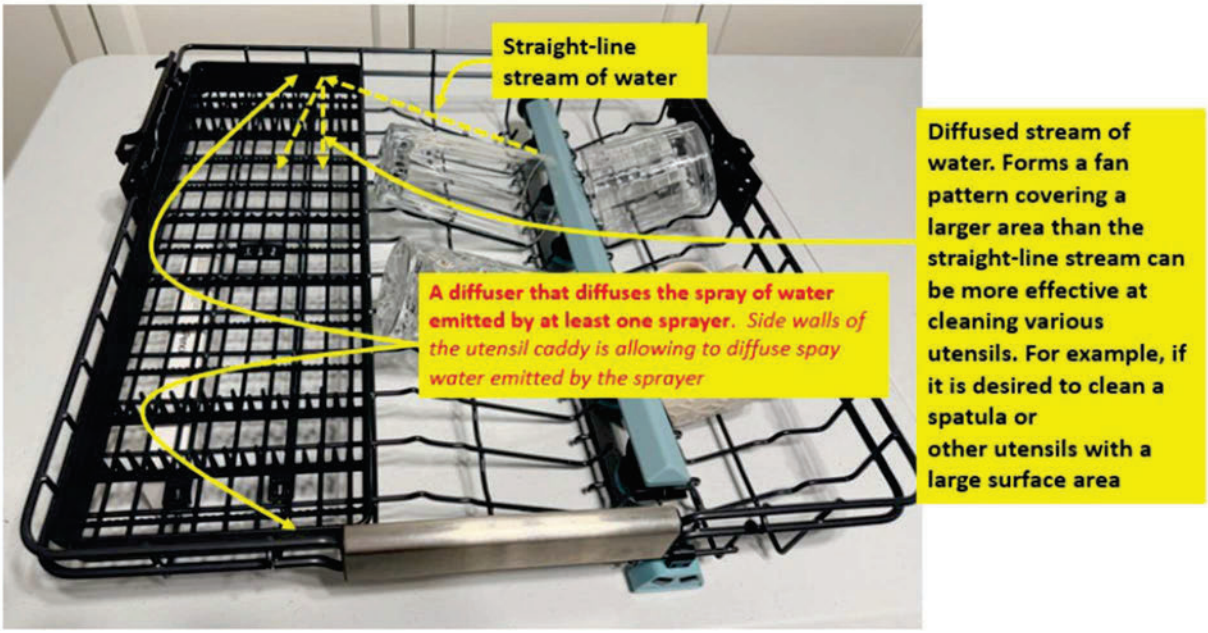

72. As the specification explains, the claimed "diffuser" corresponds to a "section" of the utensil caddy—specifically the portion of the caddy that is configured to rest against the angled portion of the bottom wall of the dish rack—that "can diffuse [a] stream of water outward to form a fan pattern covering a larger area than the straight-line stream." '922 Patent, 7:52-67. There is no such "diffuser" component in the Accused Product that has the intent and effect of diffusing water in a fan pattern.

73. The side walls of the utensil caddy in the Accused Product, by contrast, are structural boundaries whose purpose is to retain utensils or other dishes. Any water that strikes those walls is merely deflected incidentally. If incidental splash or redirection upon impact were sufficient to make a side or container wall a "diffuser," then every surface of the dishwasher—including rack wires and tub walls—would qualify as a "diffuser," effectively reading the limitation out of the claim. A POSITA would not understand a generic vertical wall, lacking any flow-distributing geometry or design, to constitute a diffuser.

74. Separately, because Claim 13 depends from Claim 1, Samsung also does not infringe Claim 13 for at least the reasons discussed above regarding Claim 1.

2. Samsung Does Not Infringe Claims 2-4, 7-12, and 14-25

75. Claims 2-4 and 7-25 depend from Claim 1. Samsung therefore does not infringe Claims 2-4 and 7-25 for at least the reasons discussed above regarding Claim 1.

VIII. INVALIDITY

76. In my non-infringement analysis, I explained that, by its plain language, Claim 1 requires that the planar portion of the dish rack not merely support a set of utensil holders (i.e., a set of utensil holders that is separate from, and rests on the dish rack), but rather integrate the utensil holders within the planar portion itself (i.e., meaning the utensil holders are integrated into the planar portion structure). *See* Section VII.A.1. Whirlpool, however, argues that utensil holders within a caddy may rest upon the planar portion and still fulfill the requirements of Element 1[e]. Tanbour '922 Declaration, 27-28. In evaluating invalidity, I have taken into account Whirlpool's position that a utensil caddy merely resting on the planar portion of the dishrack is sufficient to meet the claims, specifically Element 1[e]. Thus, while the Mailander ground (discussed below) reflects my understanding of the claims requirements, the grounds based on Carr and Bosch 800 (also discussed below) both disclose utensil caddies that rest on their respective planar portions, consistent with Whirlpool's infringement contentions.

A. Carr anticipates or renders obvious independent Claim 1 and dependent Claims 2-4

1. Independent Claim 1

a. Element 1[pre]: A dishwasher, comprising:

77. To the extent that the preamble is limiting, Carr discloses and/or renders obvious the preamble of Claim 1. Carr teaches a dishwasher appliance 100 (blue, below). Carr, [0037].

Carr discloses that "as is known in the art, the dishwasher appliance 100 includes a tub, a pump and filter assembly, a heating element, one or more wash arms, and a drain hose." Carr, [0037].

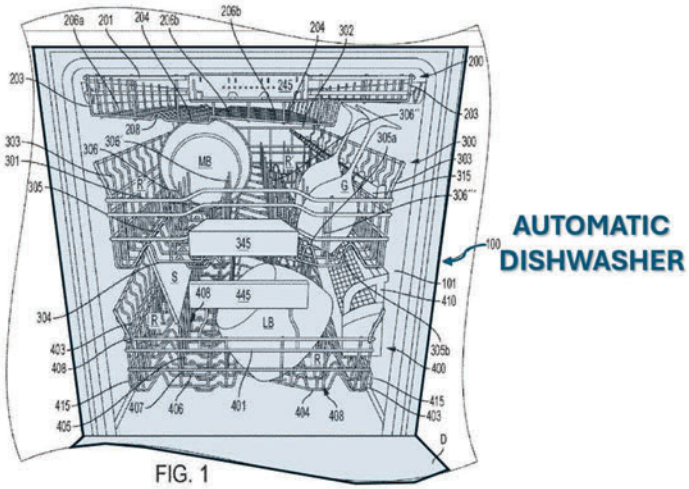

b. Element 1[a]: a tub defining a dish treating chamber;

78. Carr discloses and/or renders obvious Element 1[a]. Specifically, Carr's dishwasher appliance 100 includes a "tub defining a dish treating chamber." Carr discloses that "as is known in the art, the dishwasher appliance 100 includes a tub, a pump and filter assembly, a heating element, one or more wash arms, and a drain hose." Carr, [0037]. Carr incorporates by reference U.S. Patent No. 9,445,703 to Hiedel et al. for the detailed description of the "suitable structure and operation of the dishwasher appliance." *Id*. ("[a] detailed description of the suitable structure and operation of the dishwasher appliance 100 does not form part of the present disclosure, but can be found, for example, in U.S. Pat. Nos. 9,445,703 [("Heidel")] and 9,510,729 [("Sieben")] which are incorporated herein by reference"). I have been informed that when a document is incorporated by reference by another document, as Carr does with respect to Hiedel, the incorporated document (here, Hiedel) becomes a part of the incorporating document (here, Carr). Heidel teaches that the dishwasher "further comprises **a wash container 5**, which can be

closed off by a door 6, so that a closed wash chamber 7 results for washing items to be washed." Hiedel, 6:21–23.

79. Carr provides a "dishwasher, comprising: **a dishwashing compartment** having a loading opening." Carr, [0010]; *see also id.*, [0013]. Figure 1, annotated below, shows Carr's dishwashing appliance (blue) "with the door open so as to reveal the **dishwashing compartment**," colored in purple. Carr, [0028].

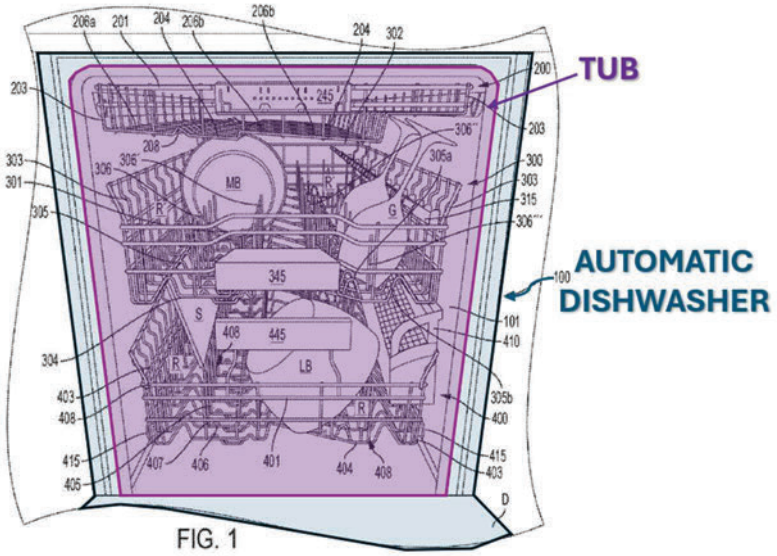

80. Carr's tub defines its dishwashing compartment or wash container which is a "dish treating chamber" for washing items to be washed.

c. Element 1[b]: a first lower dish rack and a second lower dish rack located in the dish treating chamber;

81. Carr discloses and/or renders obvious Element 1[b]. Carr discloses "a dishwashing compartment having . . . a bottom washware rack configured for movement out of and into the dishwashing compartment [and] a middle washware rack configured for movement out of and into the dishwashing compartment. Carr, [0016]. As shown in Figure 1 below, Carr's bottom

washware rack (colored in red) and middle washware rack (colored in yellow) are disposed below its top washware rack.

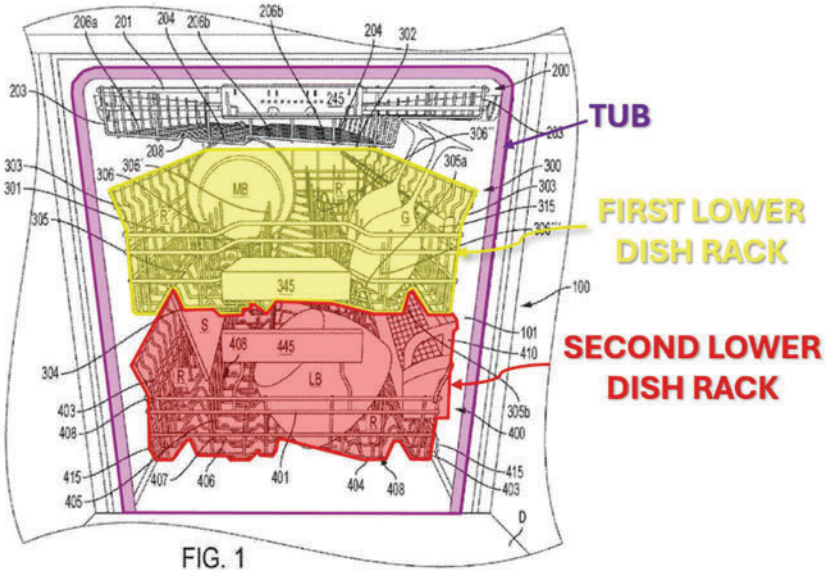

d. Element 1[c][i]: an upper dish rack located above the first lower dish rack and the second lower dish rack in the dish treating chamber,

82. Carr discloses and/or renders obvious Element 1[c][i]. Carr discloses "a dishwashing compartment having 101 . . . having a loading opening and including a third, top washware rack 200 that is positioned immediately above a second or middle washware 300. The middle washware rack 300 is in turn positioned above a first or bottom washware rack 400." Carr, [0036]. As shown in Figure 1, the top washware rack (colored in green) is above the bottom and middle washware racks within the dish treating chamber.

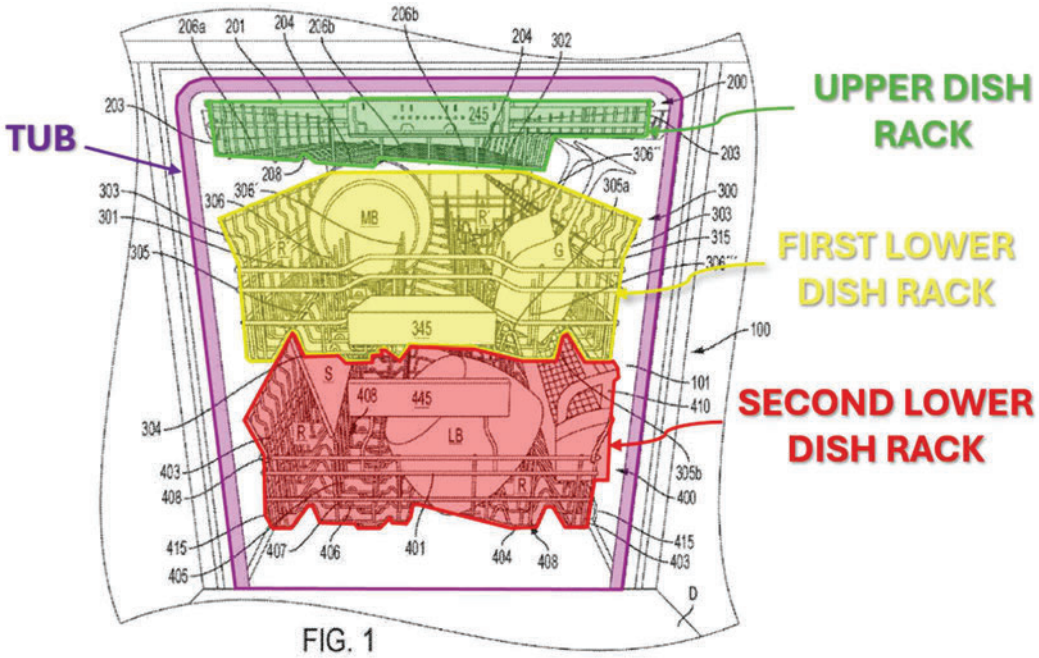

FIG. 1

e. Element 1[c][ii]: the upper dish rack defining a planar portion and a depression,

83. Carr discloses and/or renders obvious Element 1[c][ii]. Specifically, at the first end of the dish rack, the bottom wall has a substantially horizontal planar portion extending across the bottom wall. As shown in Figure 4, "top washware rack 200 is formed with a notch section 220 [(flat portion, colored in red)] along at least one side . . . in the bottom portion 204." Carr, [0047].

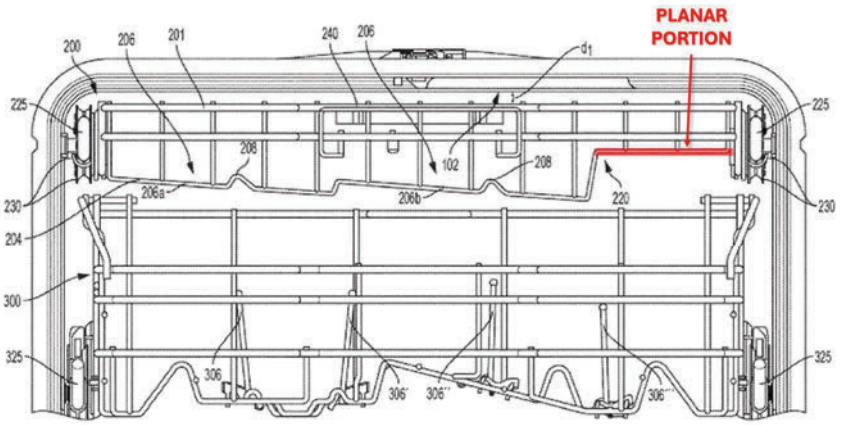

FIG. 4

84. Carr further discloses a depression shown in orange in Figure 4 below. Specifically, Carr discloses "[t]he bottom portion 204 includes one or more angled portions 206 that is/are configured to hold bowls at a slight tilt with respect to horizontal in order to drain off water from the bowls." Carr, [0043].

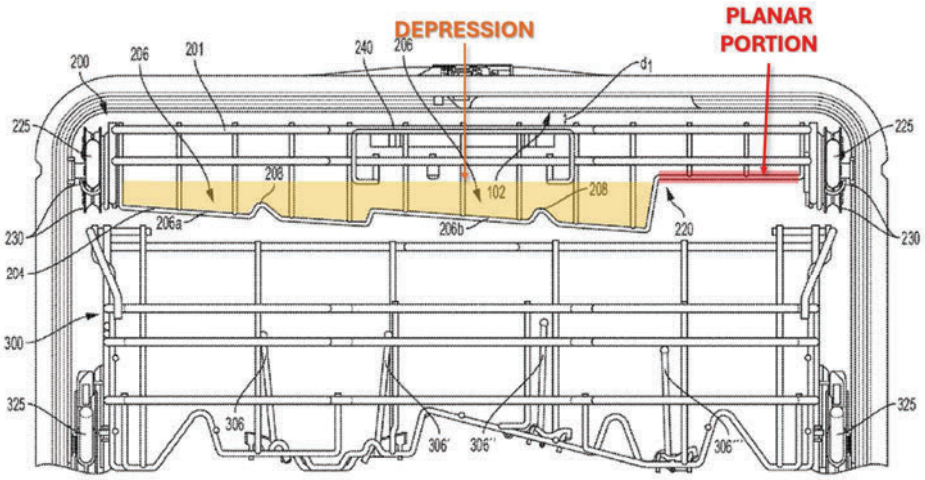

FIG. 4

f. Element 1[c][iii]: wherein the depression includes a first angled wall and a second angled wall that each extend at an acute angle relative to the planar portion, and

85. Carr discloses and/or renders obvious Element 1[c][iii]. Specifically, "bottom portion 204 includes one or more angled portions 206 that is/are configured to hold bowls at a slight tilt with respect to horizontal in order to drain off water from the bowls. Each angled portion 206 is tilted at an angle in a range of 3 to 5 degrees with respect to horizontal, and preferably is tilted at an angle of approximately 4 degrees with respect to horizontal." Carr, [0043]. Carr's Figure 4 illustrates "two angled portions 206a [(colored in blue)] and 206b [(colored in yellow)] disposed side-by-side," which serves as the first angled wall and second angle wall. *Id.* Since the angled portions of the bottom portion 204 are each angled by 3 to 5 degrees from the horizontal

portion (colored in red), the angled portions are therefore at an acute angle relative to the horizontal. *See id.*

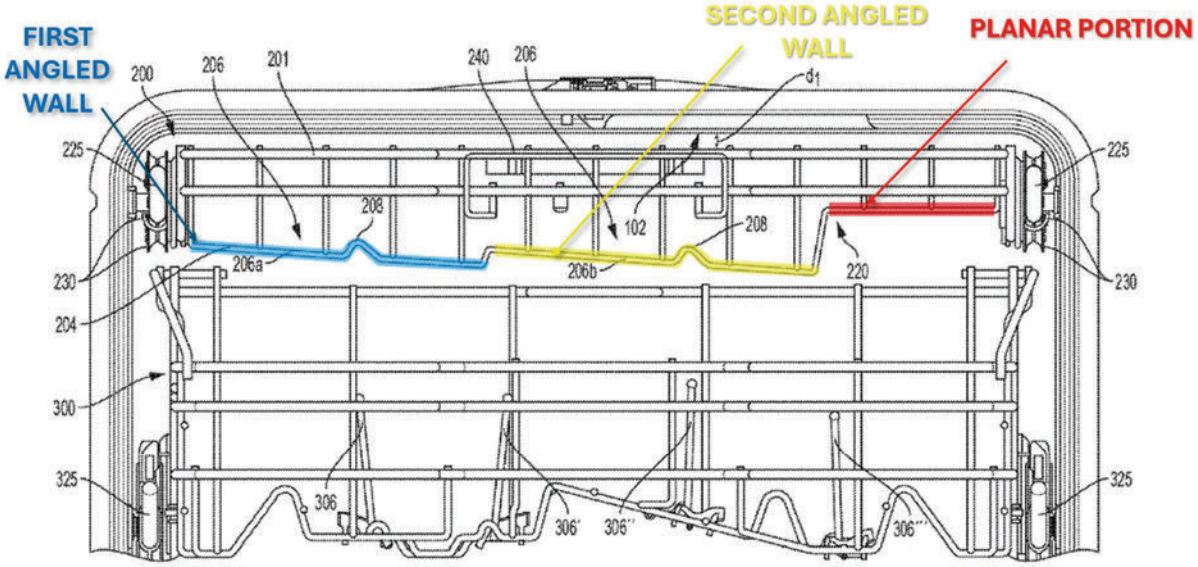

FIG. 4

g. Element 1[d]: wherein the first angled wall defines a first set of cup seats, and wherein the second angled wall defines a second set of cup seats;

86. Carr discloses and/or renders obvious Element 1[d]. Specifically, Carr explains that "the third, top washware rack 200 is configured to hold cutlery and washware . . . such as, but not limited to, small dishes, bowls, ***cups***, as well as cooking utensils." Carr, [0041]. Carr's Figure 6 illustrates a set of bowls on the top washware rack but, as the specification states in the quote above, the angled portions shown could also hold "cups" rather than bowls. The angled portions 206a and 206b therefore form cup seats.

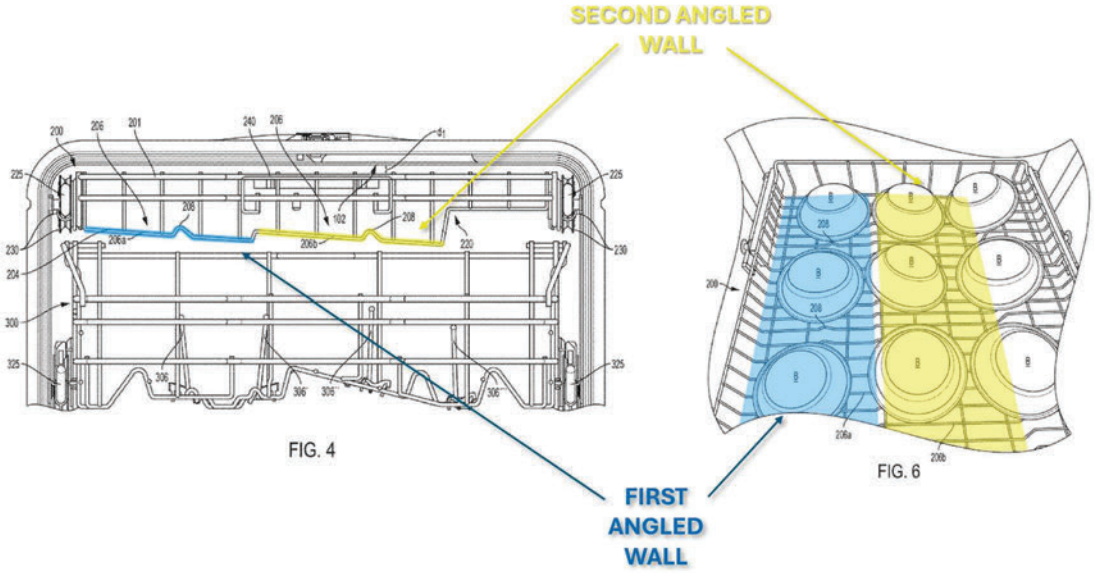

h. Element 1[e]: wherein the planar portion includes a plurality of utensil holders configured to horizontally support utensils; and

87. Carr discloses and/or renders obvious Element 1[e]. As explained above, Carr's top washware rack contains a planar portion, which is illustrated on the right end of the rack in Figures 1-6. Carr additionally discloses the use of utensil holders in the planar portion. Carr explains the washware rack, "at a location directly above the notch section 220, is configured to accommodate at least one of cutlery or utensils. Carr's plurality of utensil holders are separate from the dish rack, in accordance with Whirlpool's position. *See* Section VIII. A cutlery/utensil accessory insert 235 is shown in FIG. 3 disposed above the notch section 220." Carr, [0048]. Figure 3, illustrated below, depicts the plurality of utensil holders (pink) sitting on the planar portion (red).

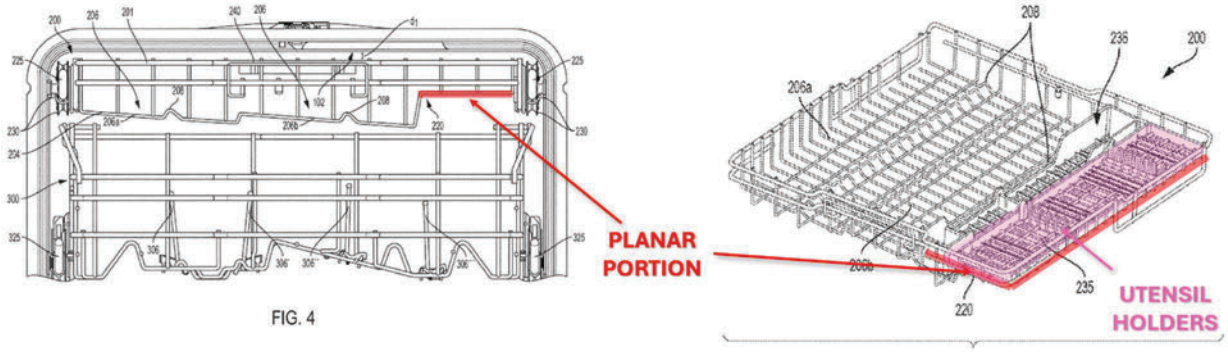

88. As shown in a zoomed in, annotated version of Carr's Figure 3 below, the figure further shows the series of loops and seats in order for cutlery/utensils to sit in the top rack. The utensil accessory insert is thus a utensil holder which supports one or more utensils, in the same way described by the '922 Patent: "first set of utensil holders illustrated as a set of utensil seats 126 or loops 128. The utensil holders can be configured to retain or hold a set of utensils such as, but not limited to, spoons, forks, sporks, knives, ladles, spatulas, or the like." '922 Patent, 6:54-58. Although not illustrated in Figure 3, the utensils would naturally sit horizontally between the series of loops and seats.

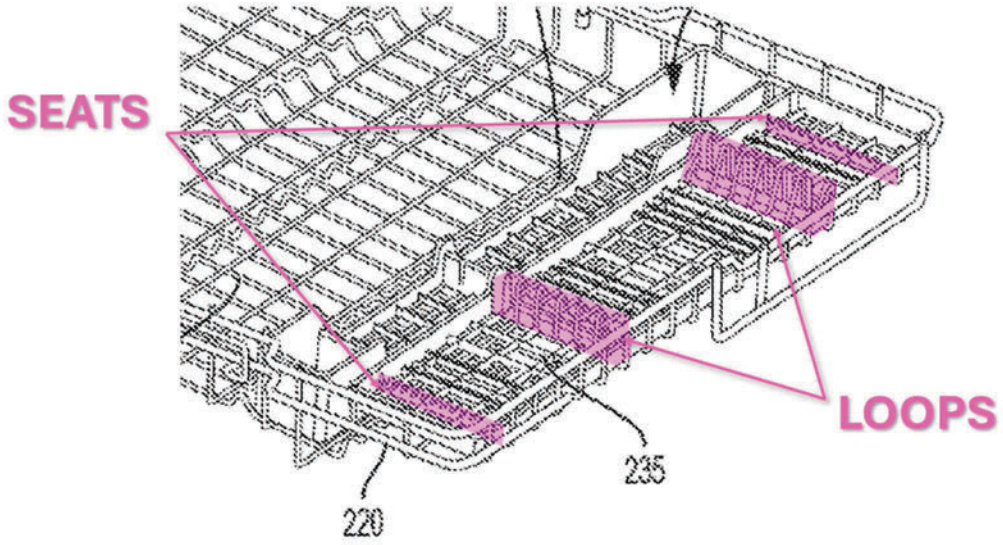

i. Element 1[f]: wherein the depression extends entirely below a top of the utensil holders in the planar portion.

89. Carr discloses and/or renders obvious Element 1[f]. Specifically, Carr's depression extends lower than the top of the utensil holder. Carr's angled portion(s) 206 create a depression at an angle relative to notch portion and extend lower than the first portion so that a bowl can sit within the depression. Carr, [0043]-[0044].

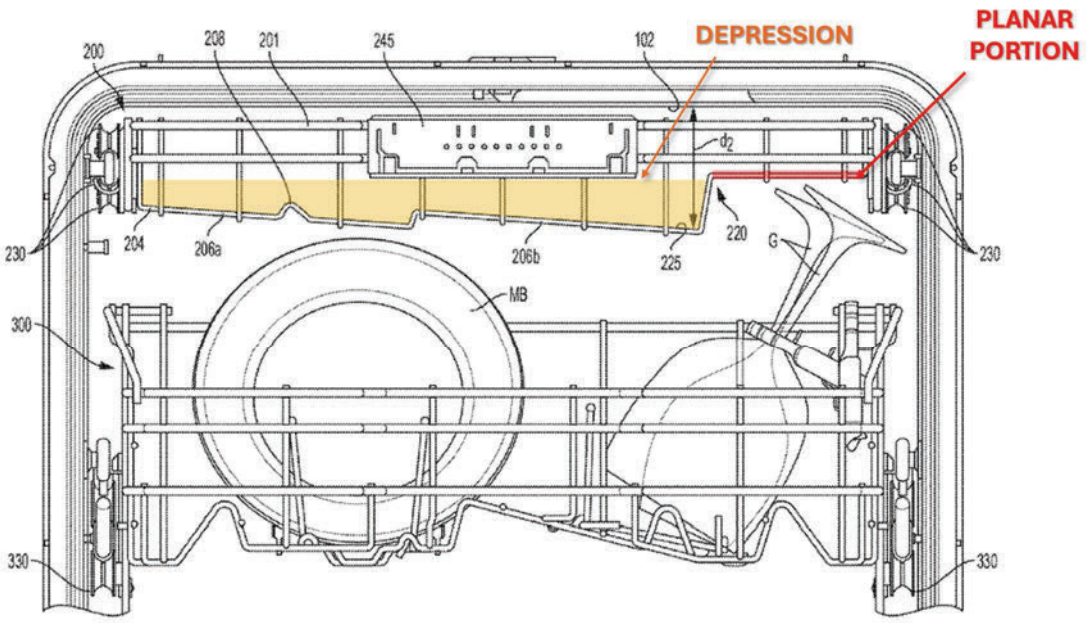

FIG. 5

90. Carr explains that "the third, top washware rack 200 is formed with a notch section 220 along at least one side (for example, shown on the right side) in the bottom portion 204 thereof in order to accommodate base portions of the one or more stemmed wine glasses G (see FIGS. 1 and 5) that are supported below on the middle washware rack 300." Carr, [0047]. In relation to the middle washware rack, the notch section 220 is elevated above the bottom portion 204 in order to make room for stemmed wine glasses G. Carr's bottom portion 204 in turn forms a depression as shown below in Figure 5.

91. Although not depicted in Figure 5, the utensil holder sits above the planar portion. The top of the utensil holder would therefore be above the planar portion. As the depression is shown to be fully below the planar portion, the depression would further be fully below the top of the utensil holder.

2. Dependent Claim 2: The dishwasher of claim 1, wherein the plurality of utensil holders is disposed in a utensil caddy operably coupled to the planar portion.

92. Carr discloses and/or renders obvious Claim 2. As explained above, Carr discloses "cutlery/utensil accessory insert 235 is shown in Fig. 3 disposed above the notch section 220." Carr, [0048]. Carr further explains that the insert may be removed to fit additional washware. *Id.*, [0049]. The insert is a utensil caddy coupled to the planar portion.

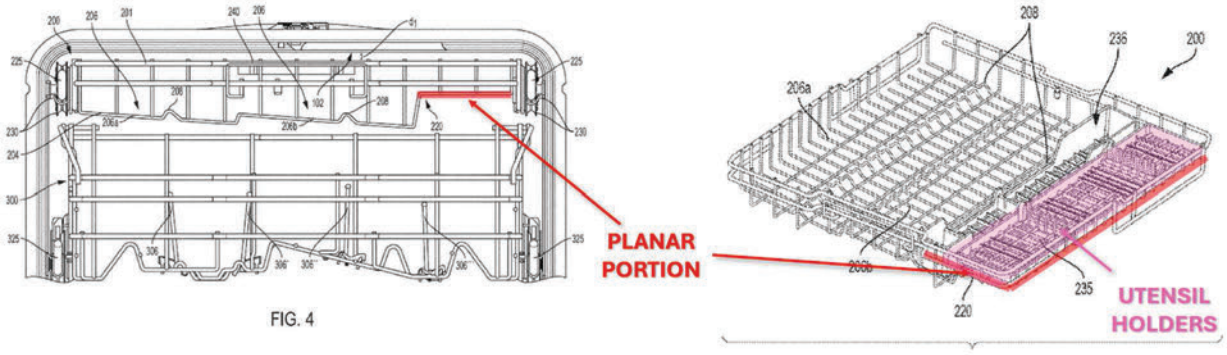

FIG. 4

FIG. 3

93. Therefore, Carr's utensil holders are operably coupled to the planar portion.

3. Dependent Claim 3: The dishwasher of claim 2, wherein the utensil caddy includes a basket that is removably coupled with a bottom wall of the planar portion.

94. Carr discloses and/or renders obvious Claim 3. As explained above, Carr discloses "cutlery/utensil accessory insert 235 is shown in Fig. 3 disposed above the notch section 220." Carr, [0048]. Carr further explains that the insert may be removed to fit additional washware. *Id.*, [0049]. The utensil accessory insert is a basket, in the same way described by the '922 Patent: "[o]ther dish holders can be provided, such as a silverware basket, separate from or combined with third level, upper, and lower dish racks." '922 Patent, 3:28-30.

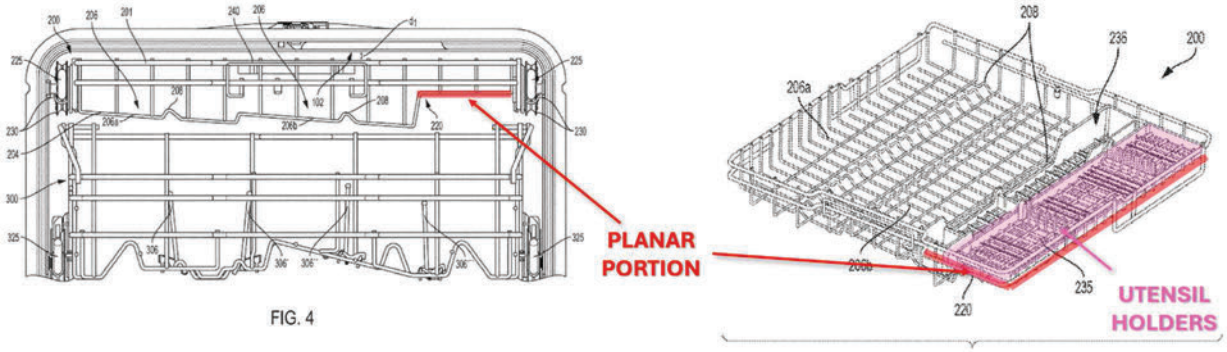

4. Dependent Claim 4: The dishwasher of claim 2, wherein the utensil caddy defines a periphery defining an interior with an open top.

95. Carr discloses and/or renders obvious Claim 4. As explained above, Carr discloses "cutlery/utensil accessory insert 235 is shown in Fig. 3 disposed above the notch section 220." Carr, [0048]. The '922 describes a periphery, for example, as "having at least first and second opposing side walls." '922 Patent, 11:9-11. As illustrated in Figure 3, Carr's utensil insert has two sets of opposing side walls with an open top.

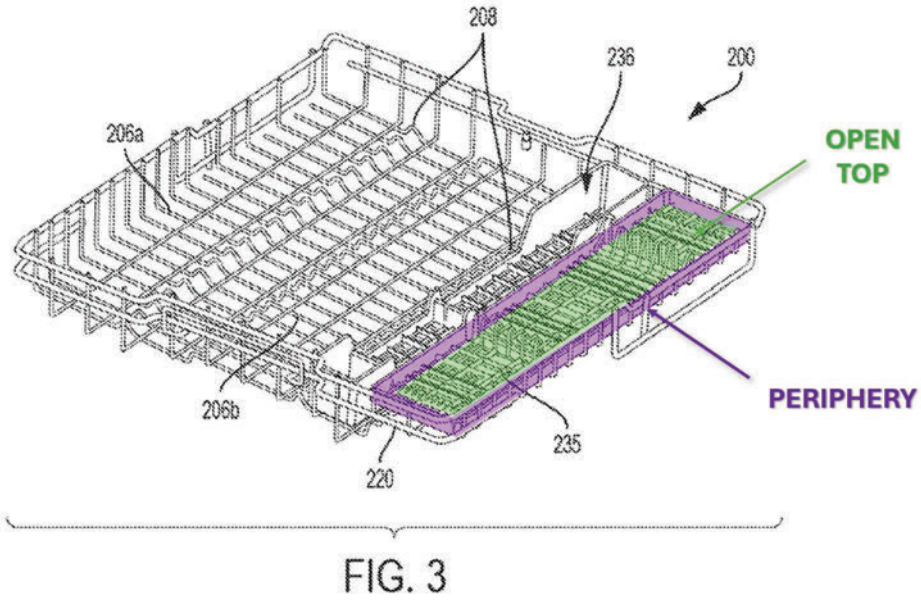

B. Bosch 800 Series anticipates or renders obvious independent Claim 1 and dependent Claims 2–4

1. Independent Claim 1

a. Element 1[pre]: A dishwasher, comprising:

96. To the extent that the preamble is limiting, Bosch 800 discloses and/or renders obvious the preamble of Claim 1. Bosch 800 discloses a dishwasher. Specifically, the Bosch 800 is a dishwasher including advanced cleaning with "Precision Wash." Brochure, 33, 25.

b. Element 1[a]: a tub defining a dish treating chamber;

97. Bosch 800 discloses and/or renders obvious Element 1[a]. Specifically, Bosch 800 discloses a tub defining a dish treating chamber. As shown below, the dishwasher has a tub with dishes included in a rack. Brochure, 26. Bosch 800 has a "deeper stainless-steel tub" (annotated purple) available in all models of Bosch 800 dishwashers. Brochure, 22. Bosch 800's tub defines a "dish treating chamber."

Brochure, 26.

c. Element 1[b]: a first lower dish rack and a second lower dish rack located in the dish treating chamber;

98. Bosch 800 discloses and/or renders obvious Element 1[b]. Specifically, the Bosch 800 discloses the dish treating chamber having three dish racks, two lower and one upper. Brochure, 18, 22. In the image below, the second lower rack (colored in red) is at the bottom of the dish treating chamber and the first lower dish rack (colored in yellow) is disposed between the upper dish rack and the second lower dish rack.

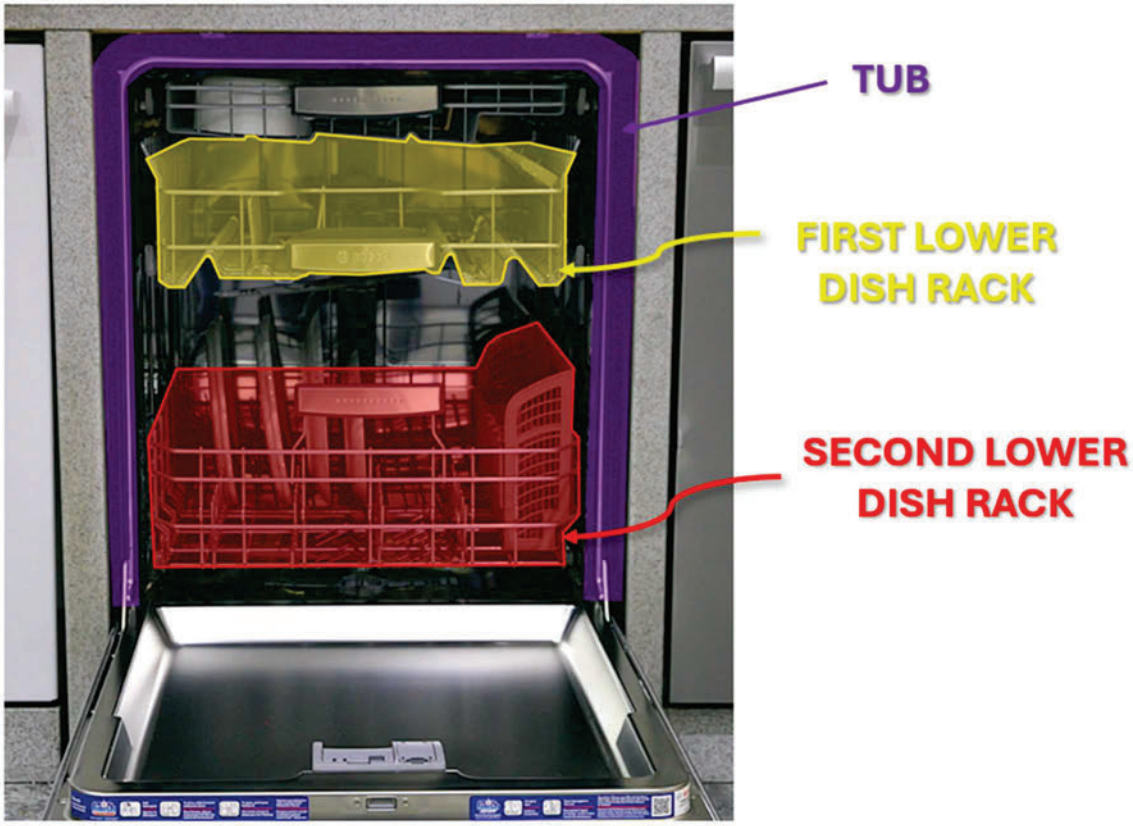

Dishwasher video, 0:23.

d. Element 1[c][i]: an upper dish rack located above the first lower dish rack and the second lower dish rack in the dish treating chamber,

99. Bosch 800 discloses and/or renders obvious Element 1[c][i]. Bosch 800 further discloses a 3rd rack called the "MyWay rack." Brochure, 18, 25. Bosch 800 explains that the 3rd rack, which serves as the recited upper dish rack, may hold, for example, "bowls, whisks, tongs, and large measuring ***cups***." *Id.* The MyWay rack is located above the lower dish racks within the dish treating chamber.

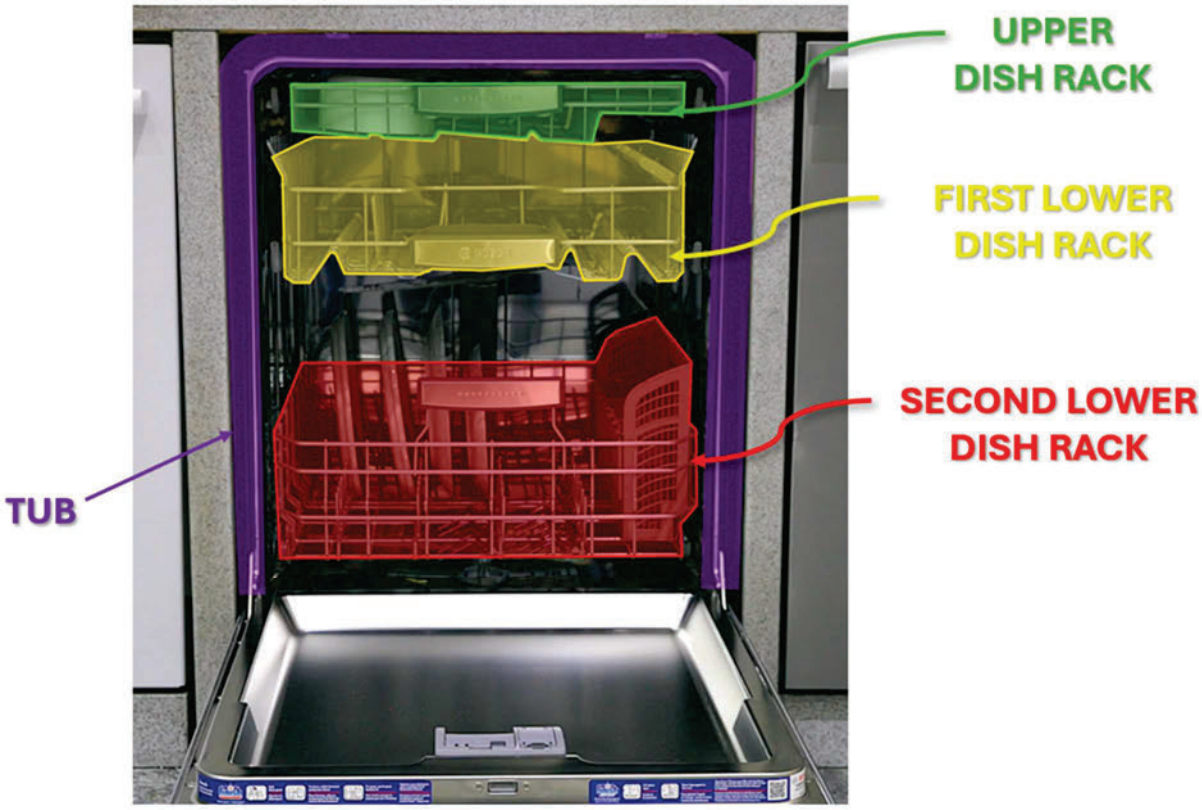

Dishwasher video, 0:23.

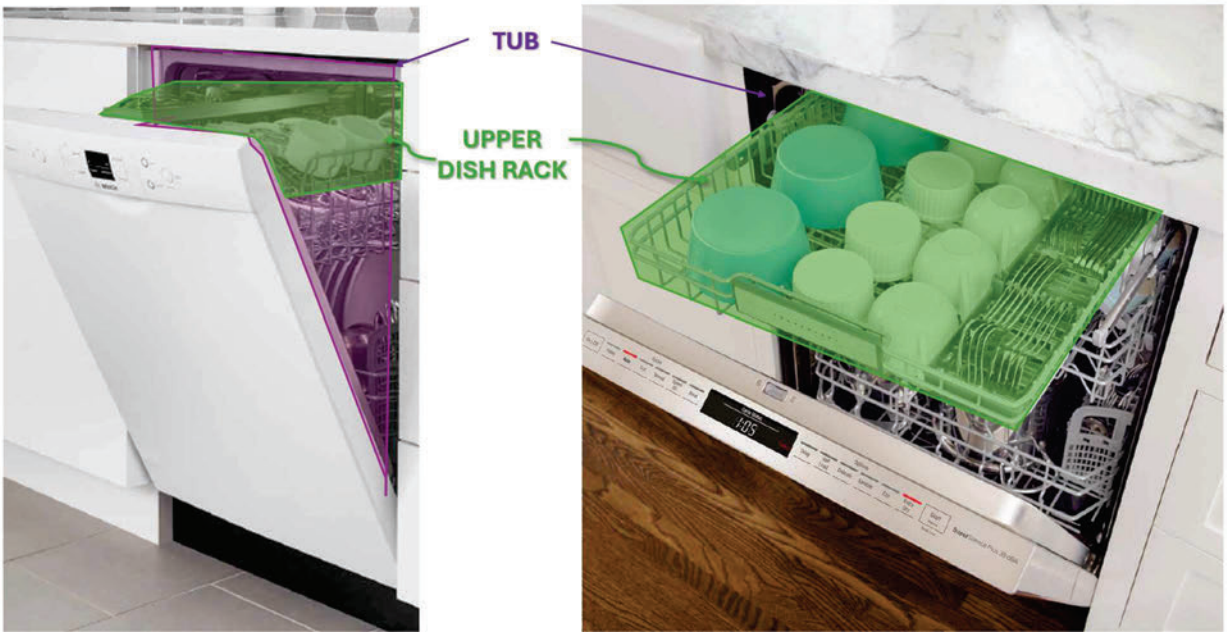

Brochure, 17, 27.

e. Element 1[c][ii]: the upper dish rack defining a planar portion and a depression,

100. Bosch 800 discloses and/or renders obvious Element 1[c][ii]. Bosch 800's 3rd rack has a bottom wall that creates a depression and a planar portion. As shown below, in Bosch 800's 3rd rack (called "MyWay rack") includes two distinct portions of the bottom wall: the depression (colored in blue) and the planar portion (colored in red). Brochure, 18; *see also* Dishwasher video, 0:25. For better clarity in the photo below and several to follow, I have only highlighted the front outline of the bottom wall or a portion of the bottom wall.

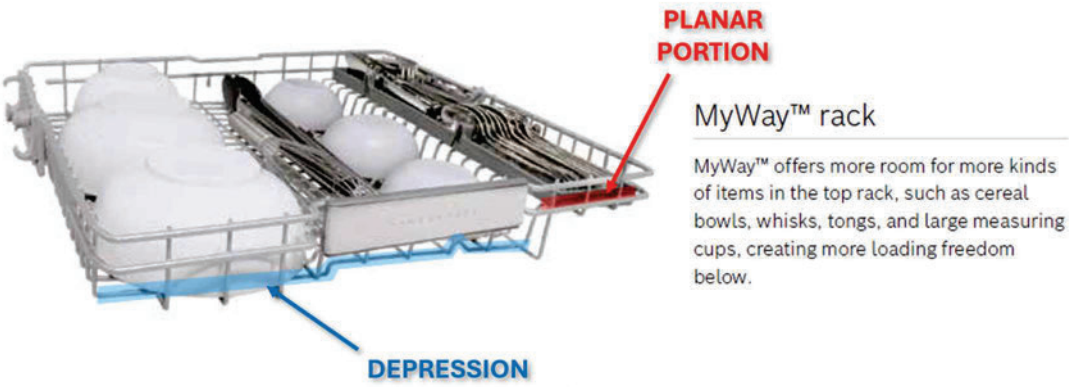

Brochure, 18.

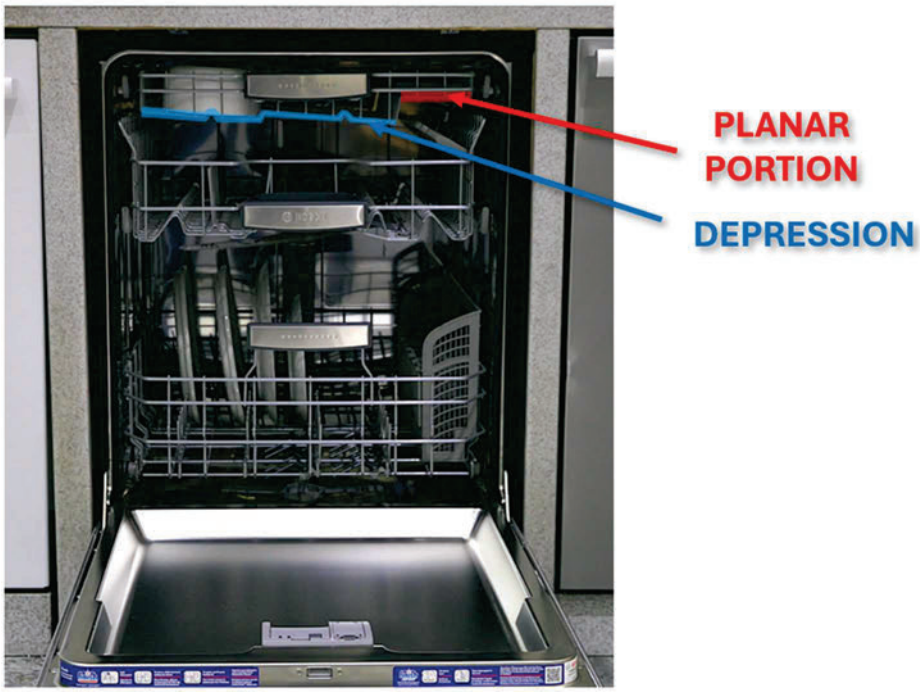

Dishwasher video, 0:23.

f. Element 1[c][iii]: wherein the depression includes a first angled wall and a second angled wall that each extend at an acute angle relative to the planar portion, and

101. Bosch 800 discloses and/or renders obvious Element 1[c][iii]. Specifically, the Bosch 800's MyWay rack has two distinct angled walls, shown in blue and yellow annotations

below. These angled walls, as are seen in the brochure and video, are disposed at an acute angle relative to the planar portion.

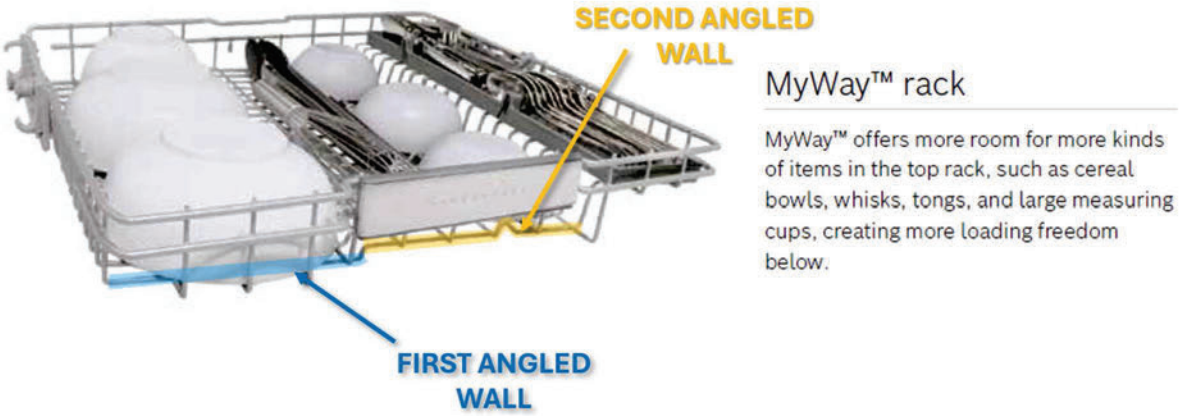

Brochure, 18.

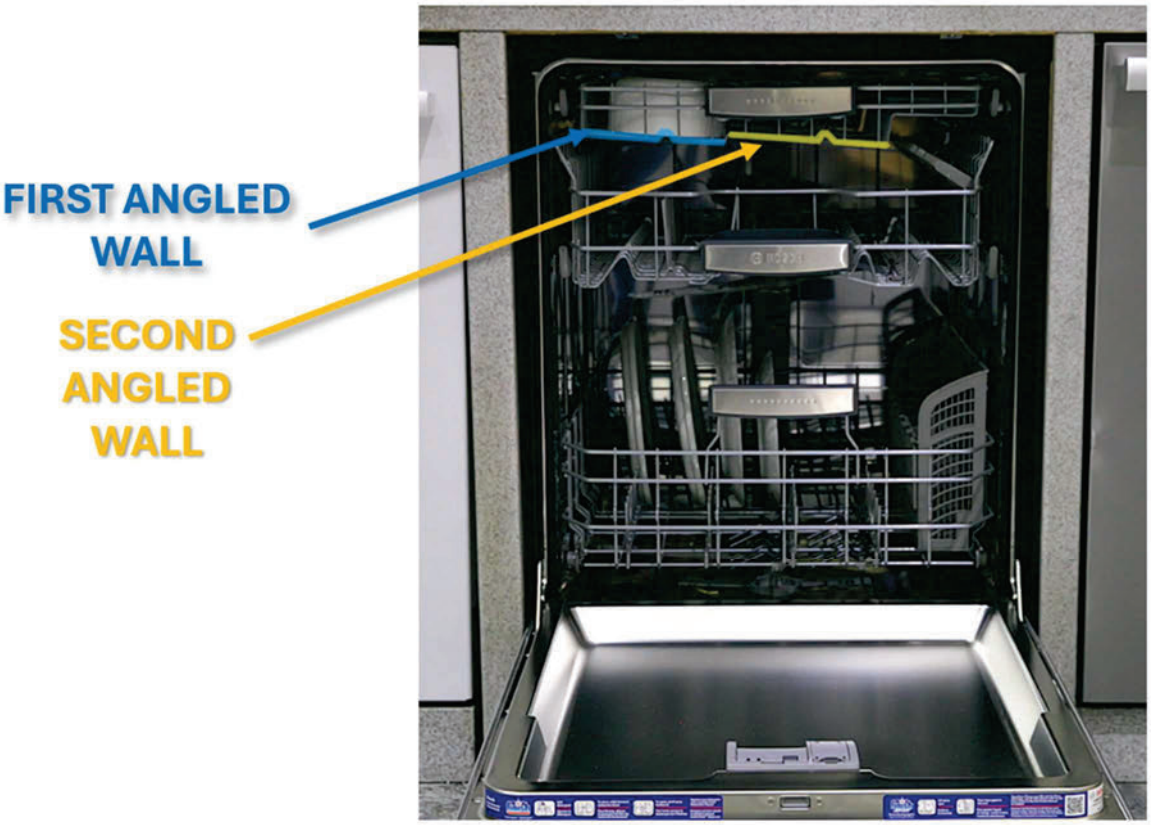

Dishwasher video, 0:23.

g. Element 1[d]: wherein the first angled wall defines a first set of cup seats, and wherein the second angled wall defines a second set of cup seats;

102. Bosch 800 discloses and/or renders obvious Element 1[d]. As previously explained, the MyWay rack of the Bosch 800 has two angled walls. The Bosch 800's angled walls further define cup seats. The Brochure explicitly states that the MyWay rack may hold items "such as cereal bowls, whisk, tongs, and large measuring ***cups***." Brochure, 17. While Bosch 800 shows bowls in several of its images, the angled walls are also angled as a cup seat to support cups in the depression, as shown and identified in the annotations below.

Id.

h. Element 1[e]: wherein the planar portion includes a plurality of utensil holders configured to horizontally support utensils; and

103. Bosch 800 Series discloses and/or renders obvious Element 1[e]. As explained above, Bosch 800 has a planar portion on the right end of the MyWay rack, colored in red. The

MyWay rack further has a plurality of utensil holders above the planar portion, and those holders support the utensils horizontally. This is illustrated below within the Brochure and Dishwasher video. Bosch 800's plurality of utensil holders are separate from the dish rack, in accordance with Whirlpool's position. *See* Section VIII.

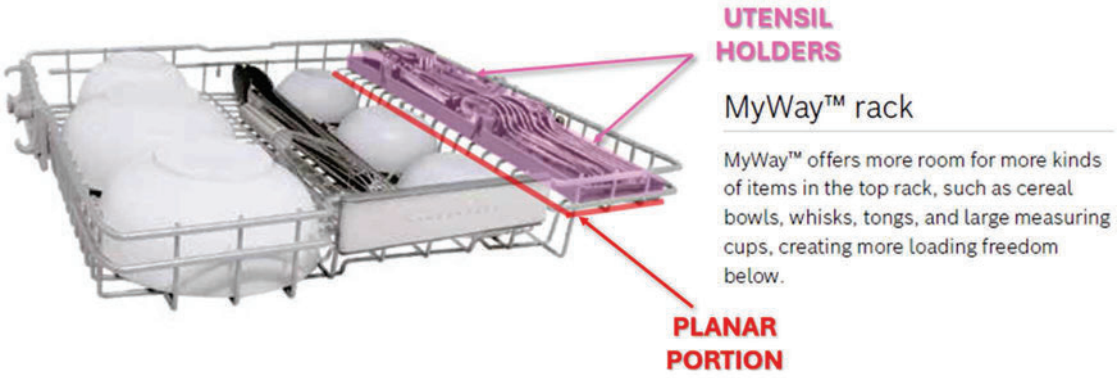

Brochure, 18.

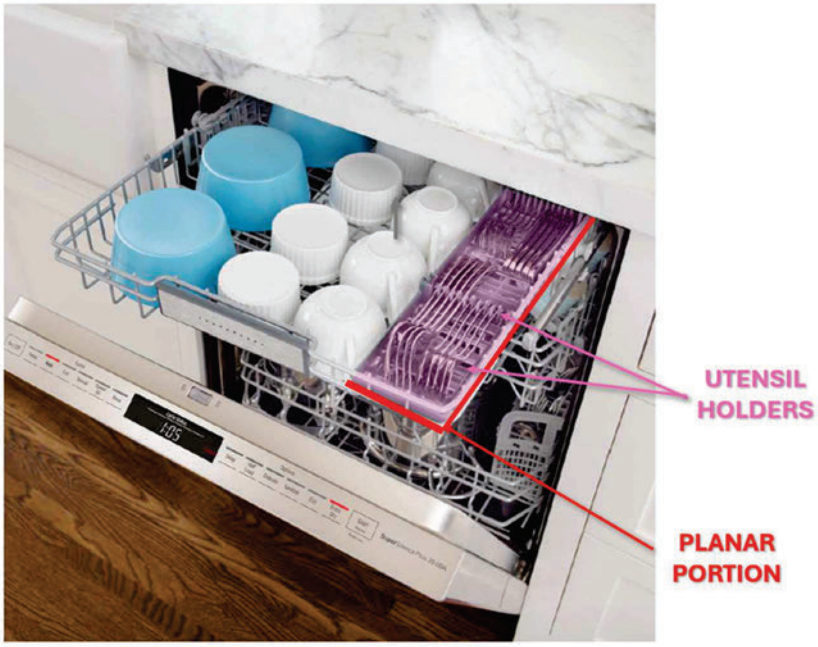

Brochure, 17.

Dishwasher video, 0:32.

i. Element 1[f]: wherein the depression extends entirely below a top of the utensil holders in the planar portion.

104. Bosch 800 discloses and/or renders obvious Element 1[f]. Specifically, as shown in the image below, Bosch's MyWay rack has a depression that is entirely below the top of the utensil holder.

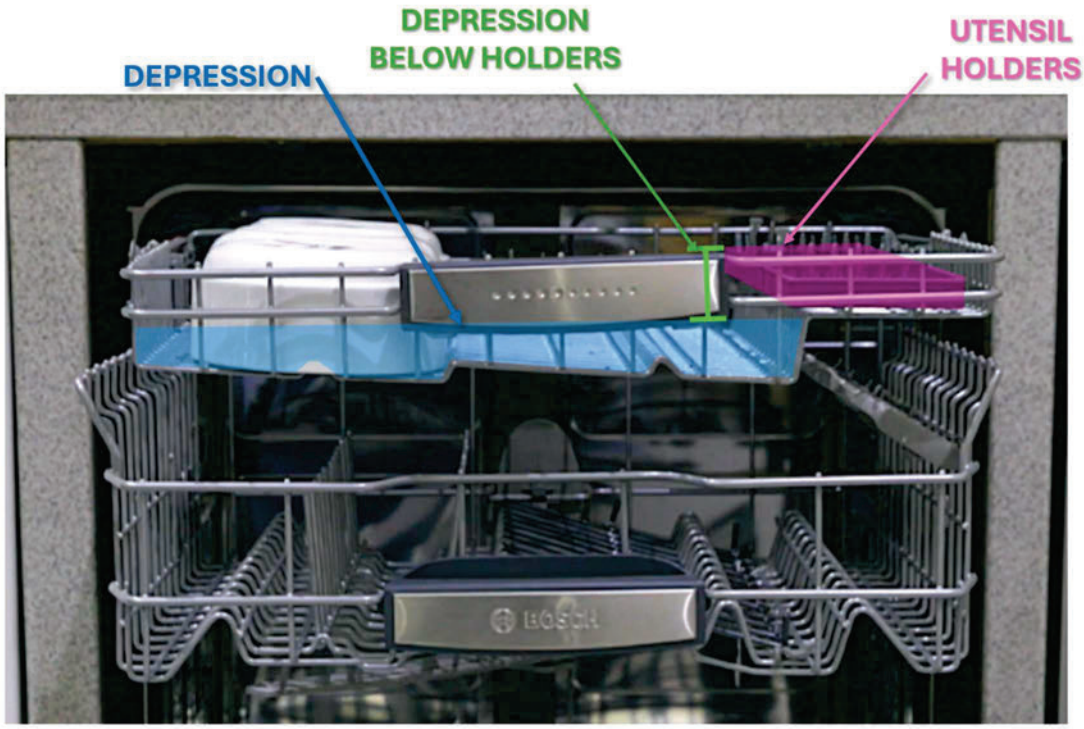

Dishwasher video, 0:25.

2. Dependent Claim 2: The dishwasher of claim 1, wherein the plurality of utensil holders is disposed in a utensil caddy operably coupled to the planar portion.

105. Bosch 800 discloses and/or renders obvious Claim 2. As explained above, Bosch 800 discloses a series of utensil holders in the MyWay rack. The Bosch 800 further discloses that the utensil holders are in a caddy which are operably coupled to the planar portion.

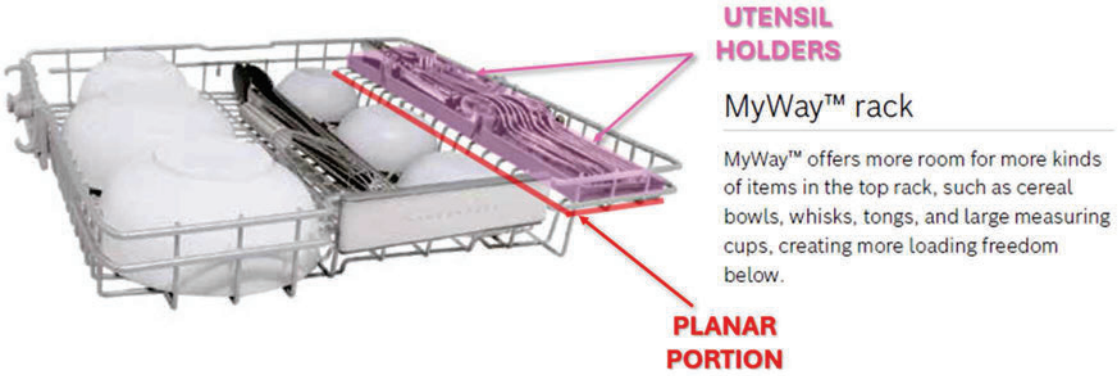

Brochure, 18.

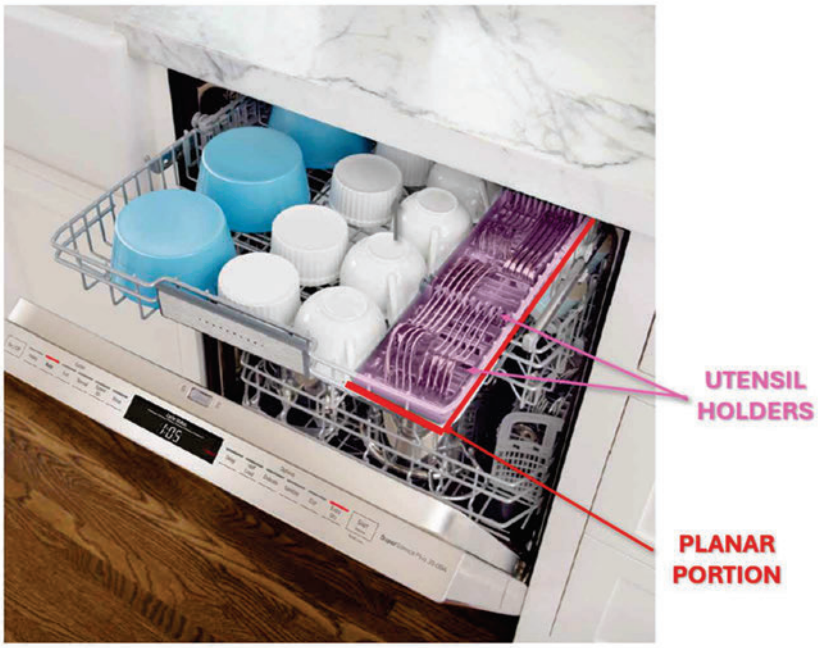

Brochure, 17.

Dishwasher video, 0:32.

3. Dependent Claim 3: The dishwasher of claim 2, wherein the utensil caddy includes a basket that is removably coupled with a bottom wall of the planar portion.

106. Bosch 800 discloses and/or renders obvious Claim 3. As explained above, Bosch 800 has a utensil holder that is operably coupled to the planar portion. The Bosch 800 utensil holder further is a basket that is removably coupled, as is shown below. Within the dishwasher video, the holder, which is a basket, is placed on to the planar portion. Therefore, the utensil caddy is removable.

Dishwasher video, 0:31.

Dishwasher video, 0:32.

4. Dependent Claim 4: The dishwasher of claim 2, wherein the utensil caddy defines a periphery defining an interior with an open top.

107. Bosch 800 discloses and/or renders obvious Claim 4. As explained above, Bosch 800 discloses a utensil caddy coupled to the planar portion. The Bosch 800 further discloses the caddy having a periphery with an interior and an open top.

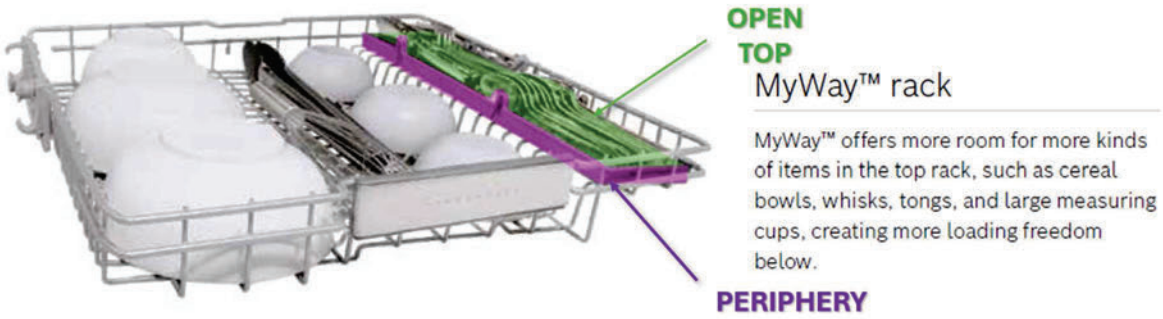

Brochure, 18.

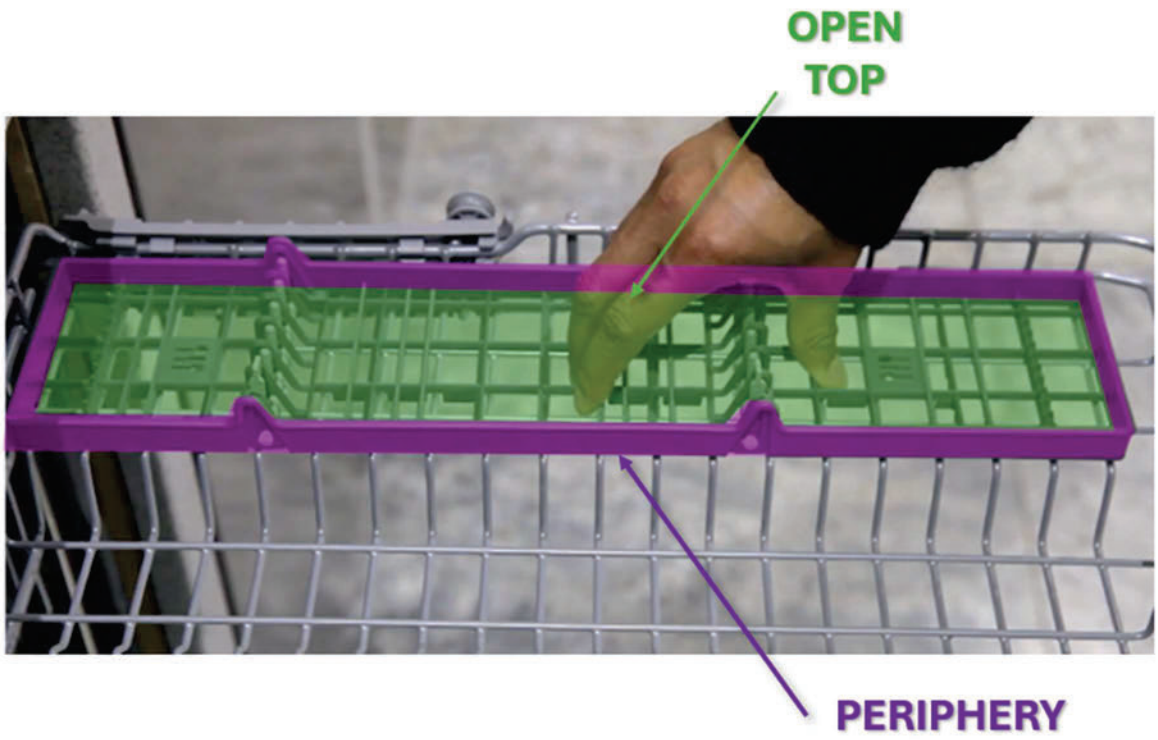

Dishwasher video, 0:32.

C. Mailander anticipates or renders obvious independent Claim 1 and dependent Claims 2-4

1. Independent Claim 1

a. Element 1[pre]: A dishwasher, comprising:

108. To the extent that the preamble is limiting, Mailander discloses and/or renders obvious the preamble of Claim 1. Mailander teaches "washing items support for a dishwasher. The invention further relates to a dishwasher with a suitably designed washing items support." Mailander, [0001]. Mailander explicitly claims a "dishwasher," which includes "a washing space that can be sealed by a door, the washing space having at least one spraying device and at least one removable crockery basket therein; and a washing items support assembly disposed in the washing space." Mailander, Cl. 22.

b. Element 1[a]: a tub defining a dish treating chamber;

109. Mailander discloses and/or renders obvious Element 1[a]. Specifically, Mailander's dishwasher includes a "washing space that can be sealed by a door." Mailander, Cl. 22. Specifically, Mailander's dishwasher washing space has at least one spraying device, at least one removable crockery basket, and washing items support assembly. *Id.* Mailander's "washing space that can be sealed by a door" is thus a tub defining a dish treating chamber because it is a sealed space that includes a crockery basket and washing items support assembly.

c. Element 1[b]: a first lower dish rack and a second lower dish rack located in the dish treating chamber;

110. Mailander discloses and/or renders obvious Element 1[b]. Specifically, Mailander discloses the use of multiple "crockery baskets provided in the dishwasher." Mailander, [0012]. Mailander teaches a washing item support 10, which is a cutlery rack that is "arranged above a crockery basket 50 in the washing space of a dishwasher." Mailander, [0025]. The crockery baskets are mounted via fastening means to the tub, which "may for example, be rotatably mounted wheels." *Id.*, [0030]. Mailander further claims the "washing space having . . . ***at least one*** removable crockery basket therein." *Id.*, Cl. 22. Mailander, therefore, teaches the use of multiple crockery baskets.

d. Element 1[c][i]: an upper dish rack located above the first lower dish rack and the second lower dish rack in the dish treating chamber,

111. Mailander discloses and/or renders obvious Element 1[c][i]. Specifically, Mailander teaches a washing items support 10, which is a cutlery rack that is "arranged above a crockery basket 50 in the washing space of a dishwasher." Mailander, [0025]. The washing items support 10, which is an upper dish rack, "may in principle [] be used for depositing large area, flat bottom washing items, e.g. cups, small bowls, glasses and the like." *Id.*, [0002]. Mailander

explains the "cutlery basket is arranged so that it can be pulled out of the washing space." *Id.*, [0005]. "Washing items support 10 is preferably arranged above the upper cutlery basket in the dishwasher." *Id.*, [0034]. Said upper cutlery basket is a first lower dish rack. As can be seen in Figure 1, annotated below, the washing items support (green) is arranged above the first crockery rack (yellow).

Fig. 1

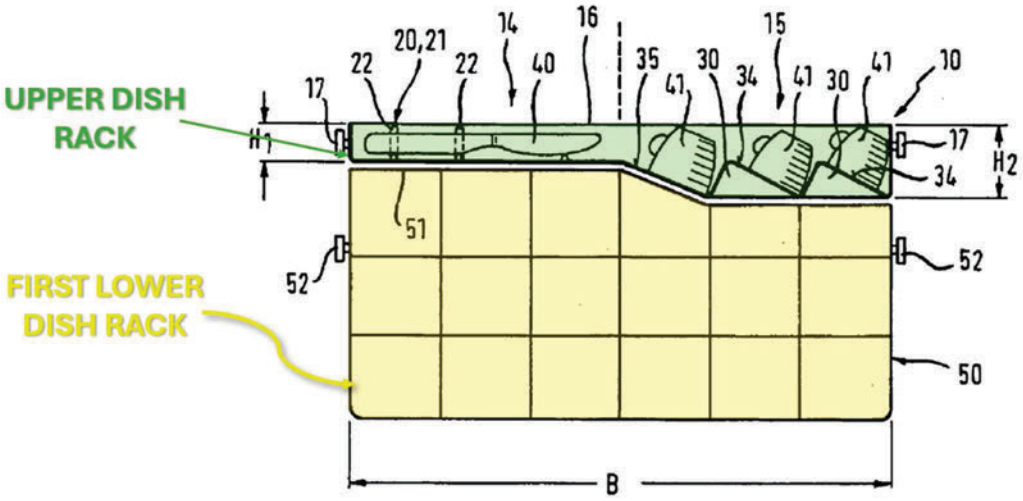

e. Element 1[c][ii]: the upper dish rack defining a planar portion and a depression,

112. Mailander discloses and/or renders obvious Element 1[c][ii] Mailander teaches that the bottom wall has a first portion defined by a first substantially horizontal planar portion extending across a first portion of the bottom wall at the first end of the dish rack. Washing items support 10 includes first container region 14 to arrange a cutlery insert 20 on it. Mailander, [0026]. As shown in Figure 1 below, the first container region 14 (red) is a planar portion that permits the user to "arrange piece of cutlery 40 . . . , lying one next to the other, . . . throughout the depth of washing items support 10." *Id.*, [0026].

Fig. 1

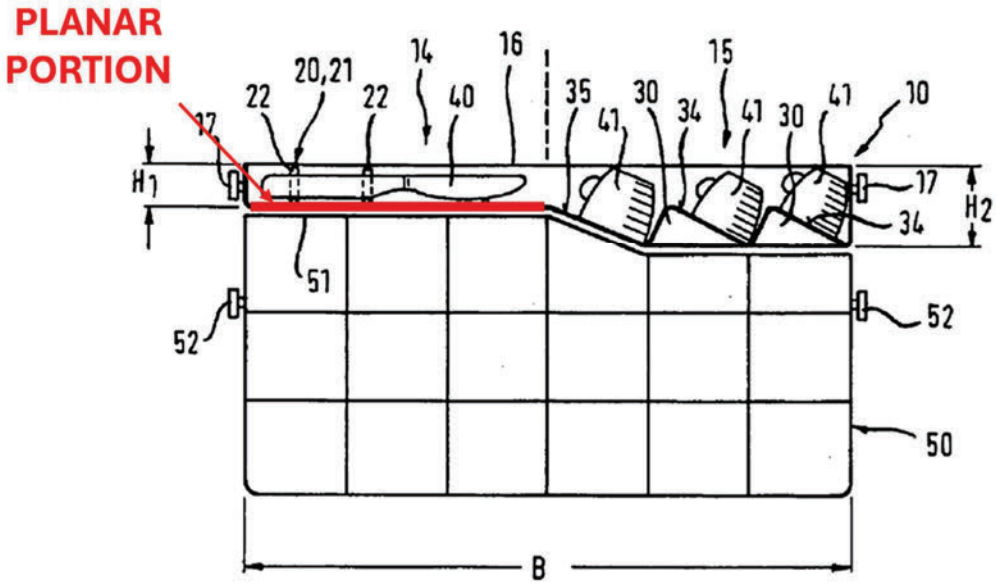

113. Mailander further teaches that the bottom wall has a second portion and defines a depression. Washing items support 10 includes second container region 15, which is "designed with washing items holders 30, each of which has a support surface 34 inclined to the horizontal," so that pieces of crockery can be placed at an angle for an increased drying effect. Mailander, [0027]. A POSITA would have viewed the bottom wall of the dish rack as corresponding to the surface on which items may be place for washing. Thus, in embodiments in which Mailander's washing items holders 30 are supported by an underlying wire rack (Mailander, [0028], [0032]), a POSITA would have viewed the inclined surfaces of those washing items holders 30 as defining part of the bottom wall of the rack.

114. Alternatively, Mailander teaches that washing items holders 30 and support surface 34 may be inserts, or "***may be formed integrally together***." *Id.*, [0027]. Mailander also teaches embodiments in which washing item holders 30 form part of the bottom wall itself, explaining that "[i]n a further embodiment, not shown, washing items support 10 may consist of only one material,

e.g. a plastic, i.e. without base basket 11." Mailander, [0028]. A POSITA would have understood that, in such alternative embodiment, the inclined surfaces of each of Mailander's washing items support 30 plainly correspond to the bottom wall of Mailander's rack, given that there would be no underlying structure below those surfaces, as illustrated below:

Fig. 1

Modified to illustrate alternative embodiment

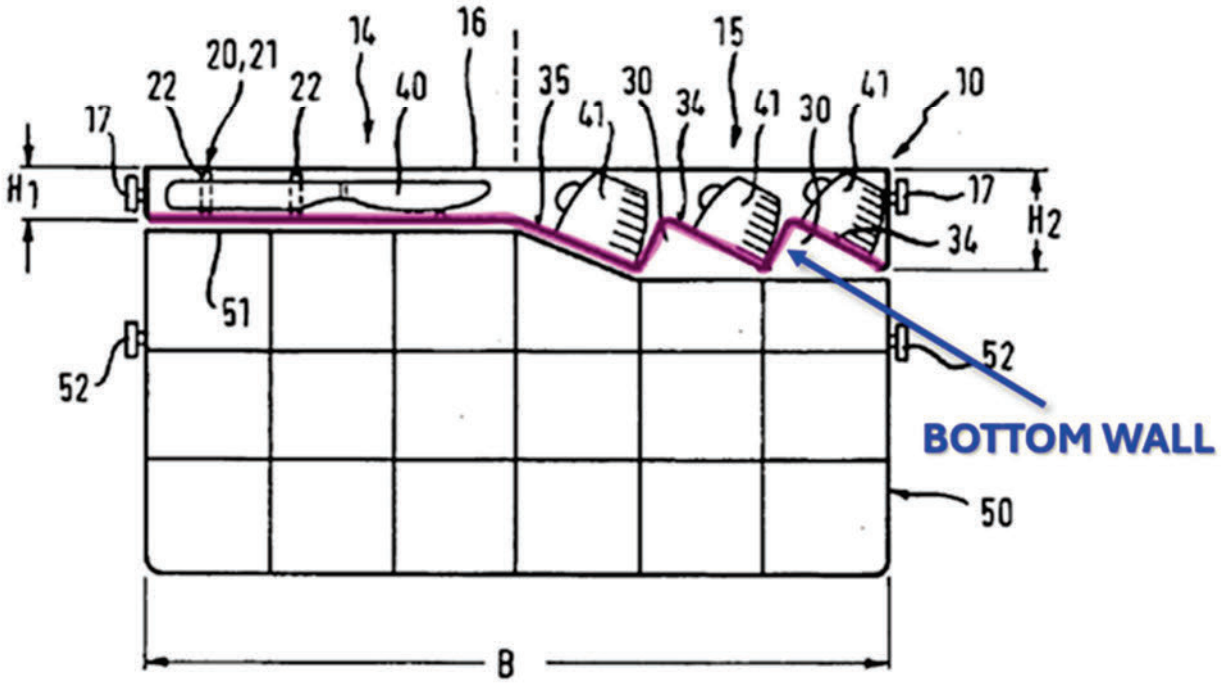

115. Mailander's washing items holder and support surface 34 define a depression. As explained above, holder 30 and surface 24 provide an angle for each crockery item can be placed at an angle. The pieces of crockery include "smaller washing items, e.g. cups, shallow glasses, dessert bowls, or alternatively cutlery in the transverse and longitudinal directions, long knifes, cooking spoons etc." *Id.* As shown in Figure 1 below, second container region 15 defines a depression (orange).

Fig. 1

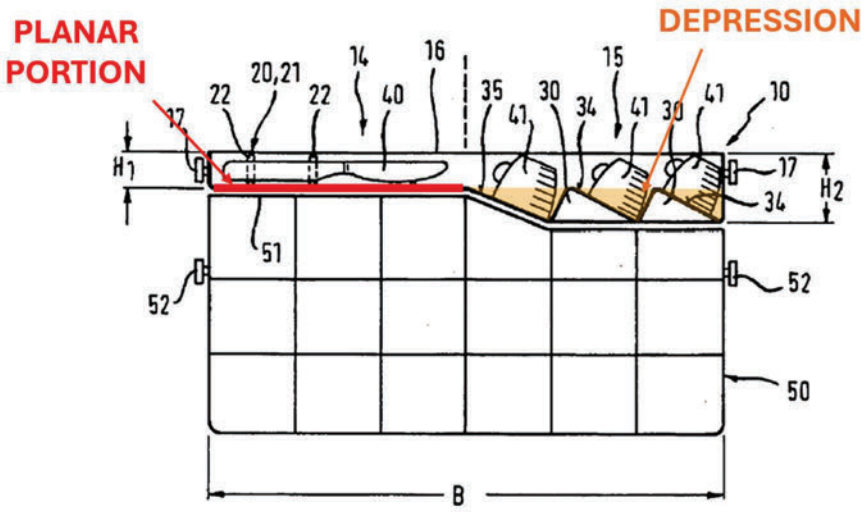

f. Element 1[c][iii]: wherein the depression includes a first angled wall and a second angled wall that each extend at an acute angle relative to the planar portion, and

116. Mailander discloses and/or renders obvious Element 1[c][iii]. Specifically, Mailander discloses "second container region 15 is provided, for example, with two washing items holders 30, each of which has a support surface 34 inclined to the horizontal. The pieces of crockery are placed in an oblique position on support surfaces 34." Mailander, [0027]. Said support surfaces 34 serve as the recited angled walls, which extend at an acute angle relative to the planar portion. In Figure 1, annotated below, a first support surface 34 (blue) is the first recited angled wall and a second support surface 34 (yellow) is the second recited angled wall.

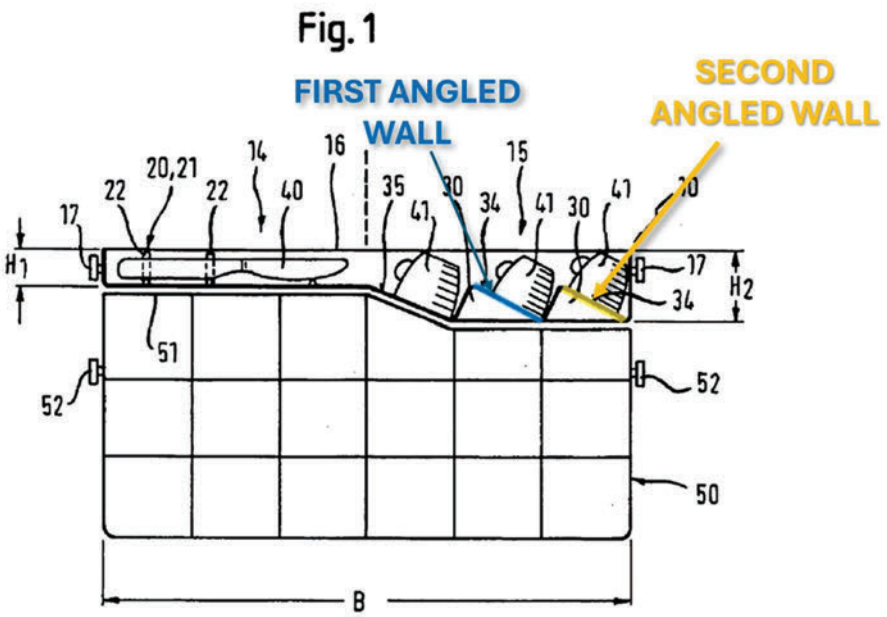

g. Element 1[d]: wherein the first angled wall defines a first set of cup seats, and wherein the second angled wall defines a second set of cup seats;

117. Mailander discloses and/or renders obvious Element 1[d]. Specifically, Mailander teaches washing items support 10 includes second container region 15, which is "designed with washing items holders 30, each of which has a support surface 34 inclined to the horizontal," so that pieces of crockery can be placed at an angle for an increased drying effect. Mailander, [0027]. Pieces of crockery include "smaller washing items, e.g. ***cups***, shallow glasses, dessert bowls, or alternatively cutlery in the transverse and longitudinal directions, long knifes, cooking spoons etc." *Id.* As shown in Figure 1 below, the first and second support surfaces 34 serve as a first set of cup seats (blue) and second set of cup seats (yellow).

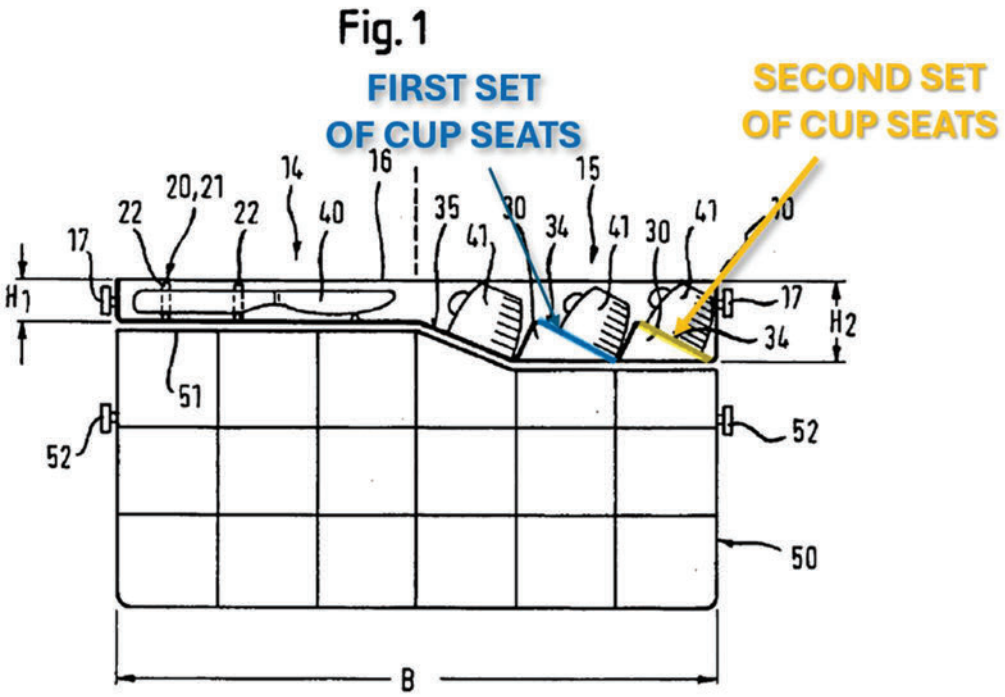

h. Element 1[e]: wherein the planar portion includes a plurality of utensil holders configured to horizontally support utensils; and

118. Mailander discloses and/or renders obvious Element 1[e]. Specifically, Mailander teaches that the first portion includes a first set of utensil holders for supporting one or more utensils. Specifically, first container region 14 includes a first set of utensil holders, in the form of cutlery insert 20. Mailander, [0026]. As explained, for Element 1[c][ii], Mailander teaches embodiments in which cutlery insert 20 forms part of the bottom wall itself, explaining that "[i]n a further embodiment, not shown, washing items support 10 may consist of only one material, e.g. a plastic, i.e. without base basket 11." Mailander, [0028]. A POSITA would have understood that, in such embodiments, the utensil holders of cutlery insert 20 are ***included*** within the planar portion of the bottom wall, itself. Alternatively, in embodiments in which cutlery insert 20 is supported by an underlying rack, Mailander teaches this element to the same extent it is met under Whirlpool's infringement theory.

119. As shown in Figure 1 below, the utensil holder (pink) supports one or more utensils so that the utensils can be arranged by "lying one next to the other, . . . throughout the depth of washing items support 10." *Id.*, [0026]. Indeed, cutlery insert 20 "enables pieces of cutlery 40 to be filled sorted, is arranged in first container region 14, so that can be loaded with a sufficient quantity of washing fluid without washing shadows." *Id.*, [0031]. Mailander further states that "pieces of cutlery 40 [] are secured ***horizontally*** by means of cutlery holders 22." *Id.* Further, Mailander discloses that the cutlery insert 20 on the planar portion may be "formed integrally" with that portion as plastic. *Id.*, [0027] ("The washing items holders and ***cutlery insert*** may be manufactured from a plastic. Both elements mentioned may be ***formed integrally*** together"); Cl. 21 ("wherein the ***first container region includes first cutlery containers*** and the first cutlery containers and the at least one washing items holder are ***designed integrally and are formed from a plastic*** in a coarse-meshed manner.").

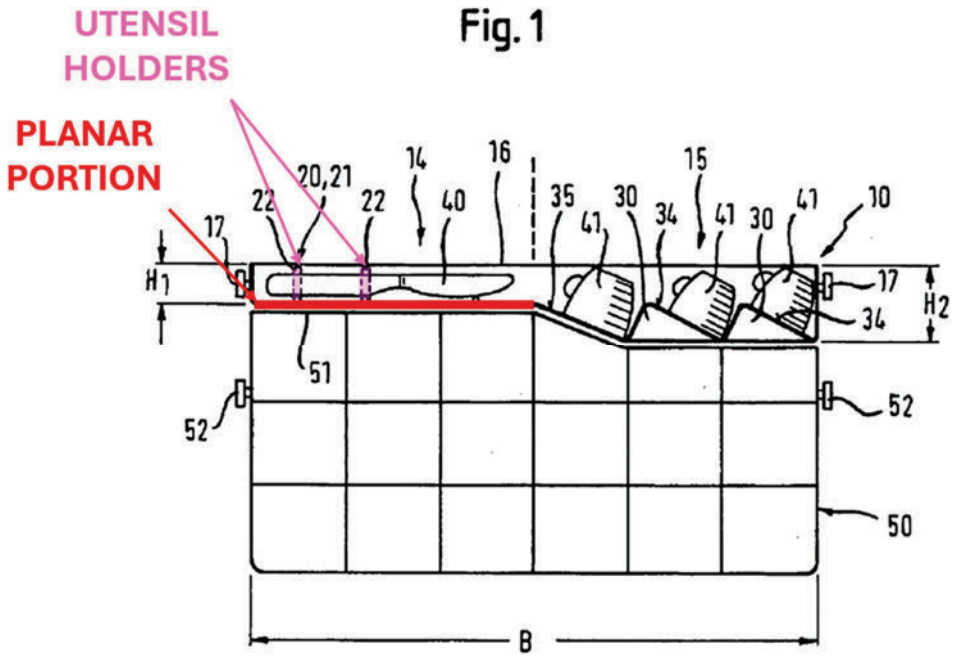

i. Element 1[f]: wherein the depression extends entirely below a top of the utensil holders in the planar portion.

120. Mailander discloses and/or renders obvious Element 1[f]. Specifically, Mailander discloses that its depression is entirely below the tops of the utensil holders. As can be appreciated from annotated Figure 1 of Mailander below, the second container region 15 forms the depression (orange) which is fully below the utensil holders (pink).

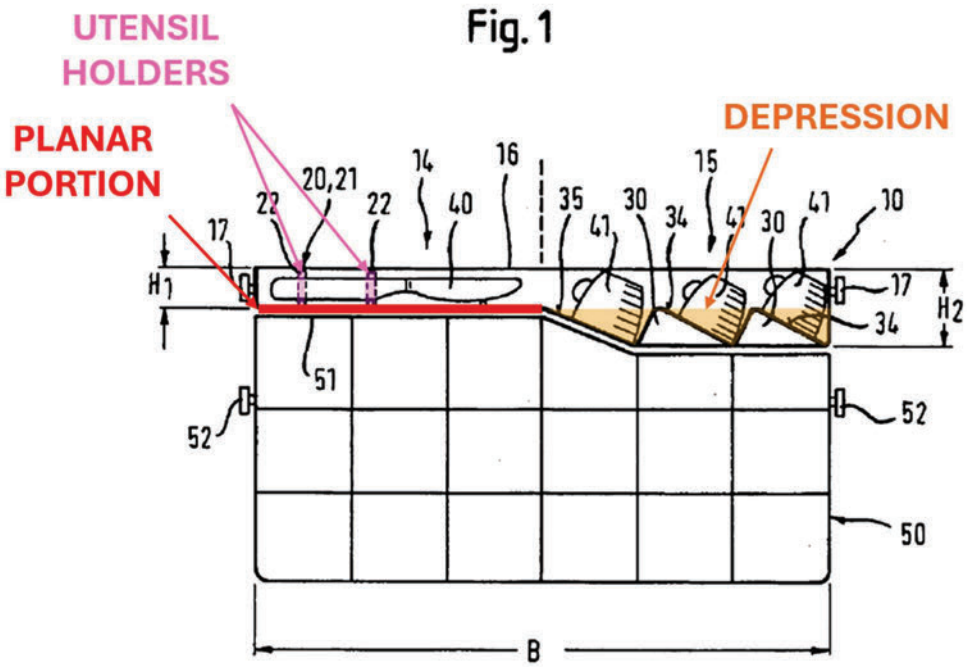

2. Dependent Claim 2: The dishwasher of claim 1, wherein the plurality of utensil holders is disposed in a utensil caddy operably coupled to the planar portion.

121. Mailander discloses and/or renders obvious Claim 2. As I explained previously cutlery holders 22 teach the recited utensil holders. *See* Section VIII.C.1.h (claim element 1[e]). Said cutlery inserts are disposed within "cutlery insert 20." Mailander, [0031]. The inserts, including the cutlery insert, "are supported on continuous bottom wires 13." *Id.*, [0028], [0032]. The cutlery insert is therefore operably coupled to the planar portion.

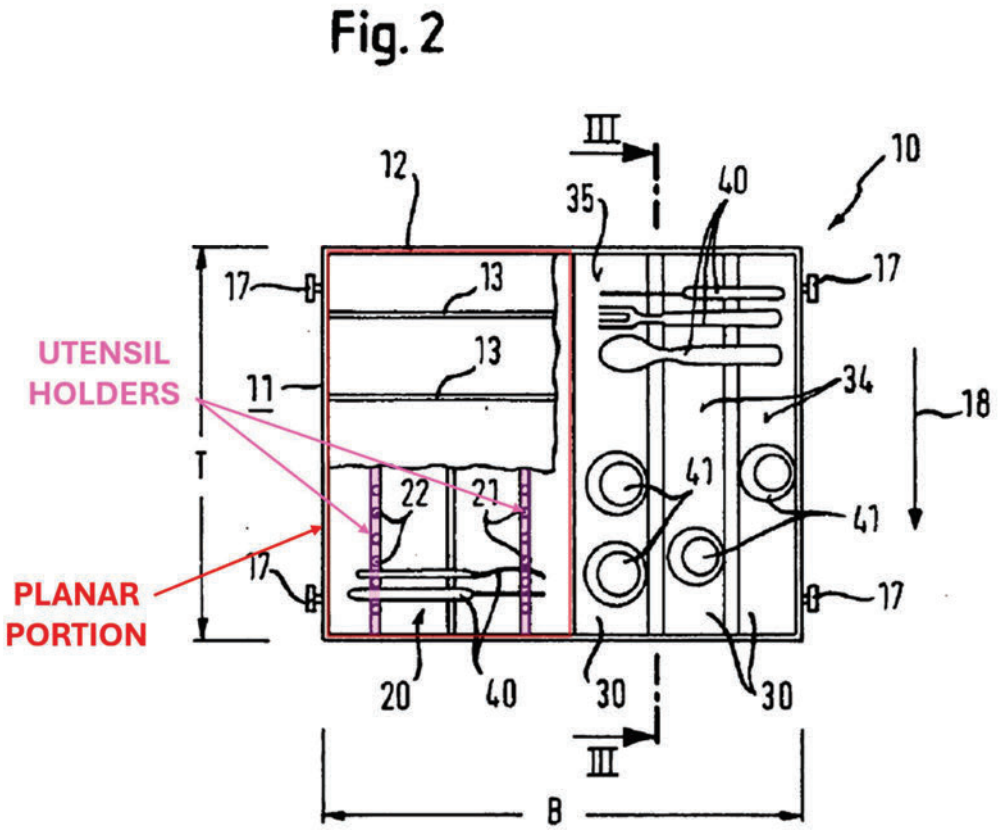

3. Dependent Claim 3: The dishwasher of claim 2, wherein the utensil caddy includes a basket that is removably coupled with a bottom wall of the planar portion.

122. Mailander discloses and/or renders obvious Claim 3. As explained above, Mailander discloses the utensil holders can be disposed in a utensil caddy operably coupled to the planar portion. *See* Section VIII.C.2 (claim 2). Mailander further teaches the caddy includes a basket that is removably coupled. Mailander teaches that "[t]he washing items holders and cutlery insert . . . may be formed integrally together ***or they may be provided as separate inserts***." Mailander, [0027]. The cutlery insert may be fully removable, along with the bottom wall of the washing items support 10, leaving behind "continuous bottom wires 13." *Id.*, [0028].

D. Andrew in view of Carr renders obvious independent Claim 1 and dependent Claims 2-4, 7-26

1. Motivation to combine Andrew's and Carr's teachings

123. In my opinion, Andrew in view of Carr renders obvious Claims 1-4 and 7-25 of the '922 Patent. As detailed below, a POSITA would have found it obvious and would have been motivated to combine Andrew and Carr.

124. A POSITA would have been motivated to combine Andrew and Carr based on at least their teachings because they are both directed to a top rack of a dishwasher that can hold utensils. For example, Andrew "relates to a domestic appliance and particularly to a rack for a dishwasher." Andrew, 1:15-16. Andrew further aims to "provide a dish rack with an improved and versatile supporting means for holding utensils in a compact manner." *Id.*, 1:43-45. The wire elements of Andrew's dishrack are preferably constructed of metal wire that "may be coated with some suitable resilient substance such as natural or synthetic rubber or vinyl material." *Id.*, 2:69-70. Similarly, Carr relates to "a third or top washware rack that is made out of wire." Carr, [0001].

125. Carr further teaches the use of "[a] cutlery/utensil accessory insert 235 is shown in FIG. 3 disposed above the notch section 220." Carr, [0048]. As the cutlery/utensil accessory insert is included in Carr's Figure 3, but removed from otherwise identical Figure 2, it is my understanding that the insert is removable.

126. A POSITA would have been motivated to combine or apply the removable utensil insert of Carr onto the flat support section of Andrew. Andrew recognizes that its invention may be improved by "widely diversified arrangements or combinations of utensil support" since the "rack is flexible and versatile." Andrew, 4:60-68. A POSITA would recognize the benefits of using Carr's insert, such as greater organization of flatware, as well as the ability to remove the insert along with the flatware within. Andrew's claims recognize that "preventing knives, forks

or the like from sliding off the support" is an important property of its dish rack. *Id.*, Cl. 1. The cutlery insert of Carr would provide for additional capacity, while also further preventing cutlery from being flung off the upper rack during washing operations. Andrew teaches that "[i]t is desirable to hold the maximum quantity of any of a plurality of like dishes or of all different sorts or combinations and varieties of utensils in such a compact way that none will block the liquid cleaning stream from another and all are held to drain adequately after being washed without trapping liquid therein." *Id.*, 1:33-39. By including the cutlery insert of Carr, the goals of Andrew would be further achieved by allowing for greater capacity while maintaining adequate draining.

127. Carr discloses "a dishwashing compartment having . . . a bottom washware rack configured for movement out of and into the dishwashing compartment [and] a middle washware rack configured for movement out of and into the dishwashing compartment." Carr, [0016]. Andrew, however, only discloses one lower rack 16 which may hold "larger items or utensils." Andrew, 5:2-3.

128. A POSITA would have been motivated to combine the teachings of Carr's second (i.e., middle) lower dish rack with the teachings of Andrew. Andrew's disclosure predates Carr by nearly 60 years. In that time, dishwashing technology has evolved. In many instances, dishwasher tubs have increased in size. A POSITA would understand that a modern dishwasher would not be limited to two dishracks as is the case in Andrew, and would have been motivated to use a three dishrack configuration such as in Carr. Utilizing three dishracks also is consistent with the goals of Andrew. Andrew recognizes "[i]t is desirable to hold the maximum quantity of any of a plurality of like dishes." Andrew, 1:33-35. It further states that it was desirable to increase capacity "to eliminate the necessity of carrying out two or more washing operations." *Id.*, 4:44-

46. Thus, adding an additional lower dishrack is consistent with the goals and teachings of Andrew.

129. A POSITA considering the combination of Andrew and Carr would have a highly likelihood of success, as it amounts to a simple combination of well-known techniques in the art. Carr's lower racks and cutlery/utensil accessory insert would have been an obvious choice to implement with Andrew's dishwasher design.

2. Independent Claim 1

a. Element 1[pre]: A dishwasher, comprising:

130. To the extent that the preamble is limiting, Andrew in view of Carr renders obvious the preamble of Claim 1. Andrew teaches a dishwasher (blue, below). Andrew, 1:15-16. Andrew discloses that "[a]n object of my invention is to provide a dish rack with an improved and versatile supporting means for holding utensils in a compart manner . . . [in] a dishwashing machine so that washing and rinsing . . . may be efficiently carried out." *Id.*, 1:43-50.

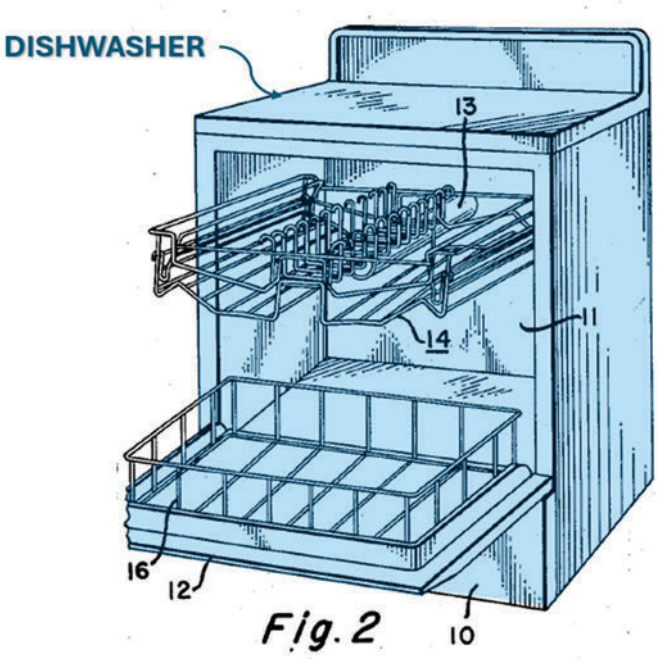

b. Element 1[a]: a tub defining a dish treating chamber;

131. Andrew in view of Carr renders obvious Element 1[a]. Specifically, Andrew's dishwasher includes "a cabinet 10 having a washing compartment 11." Andrew, 2:38-40. Andrew further provides "with a front access opening leading to compartment 11 and closed by door 12." *Id.*, 2:41-43. Figure 2, annotated below, shows Andrew's dishwasher (blue) with the interior compartment 11 (purple).

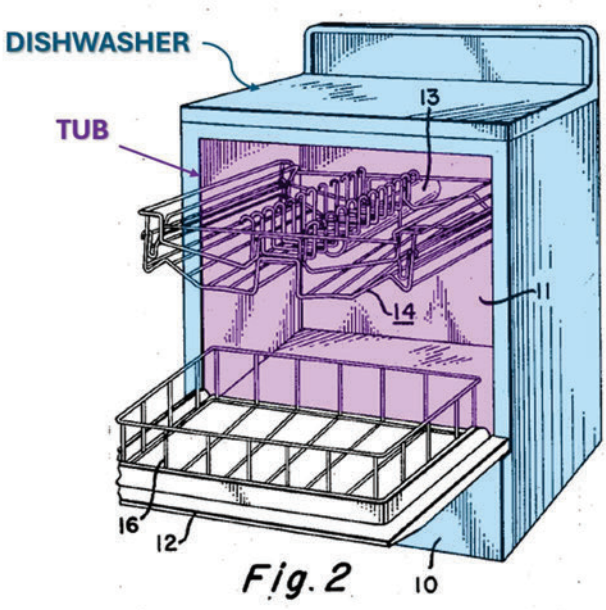

132. Andrew has "racks 14 and 16 provid[ing] a utensil supporting arrangement in compartment 11 for utensils to be washed and rinsed therein." Andrew, 2:53-55.

133. Andrew's compartment 11 is a tub defining a "dish treating chamber" for washing items to be washed.

c. Element 1[b]: a first lower dish rack and a second lower dish rack located in the dish treating chamber;

134. Andrew in view of Carr renders obvious Element 1[b]. Carr discloses "a dishwashing compartment having . . . a bottom washware rack configured for movement out of

and into the dishwashing compartment [and] a middle washware rack configured for movement out of and into the dishwashing compartment." Carr, [0016]. Andrew discloses one lower rack 16 which may hold "larger items or utensils." Andrew, 5:2-3. Andrew further explains that "racks 14 and 16 provide a utensil supporting arrangement in compartment 11 for utensils to be washed and rinsed therein." *Id.*, 2:53-55.

135. As I explained above, a POSITA would have been motivated to combine the teachings of Carr's second lower dish rack with the teachings of Andrew. The combination of Andrew-Carr, discloses two lower dish racks within the dish treating chamber. Figure 1, annotated below, shows the first lower dish rack (yellow) and second lower dish rack (red) within the dishwasher tub (purple).

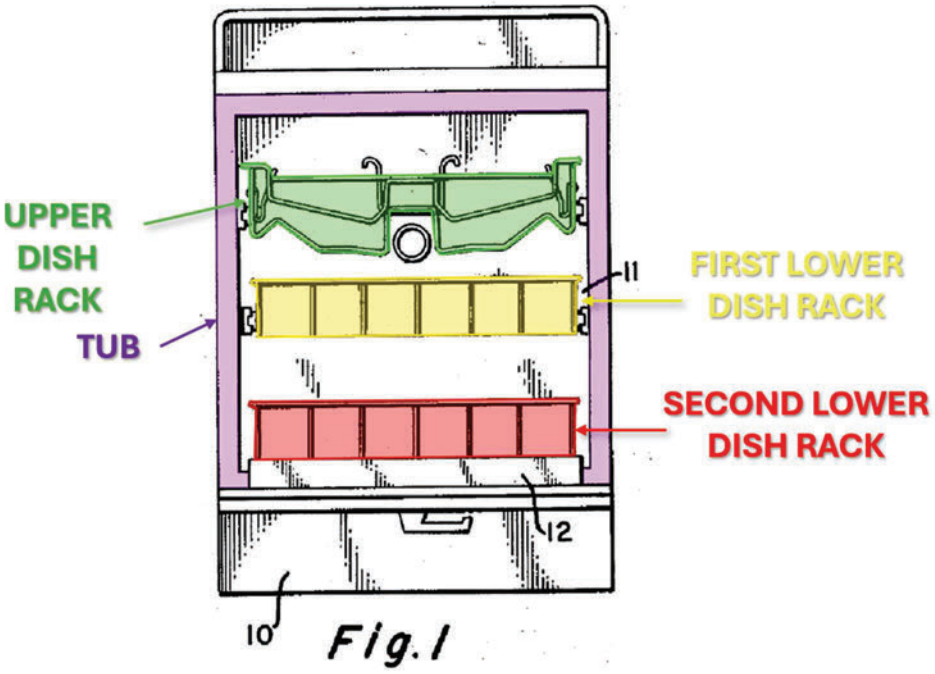

d. Element 1[c][i]: an upper dish rack located above the first lower dish rack and the second lower dish rack in the dish treating chamber,

136. Andrew in view of Carr renders obvious Element 1[c][i]. As previously explained, the Andrew-Carr combination has two lower dish racks within the dishwasher tub. Andrew further teaches an upper dish rack located above the lower dish racks in the tub. Andrew explains that "racks 14 and 16 provide a utensil supporting arrangement in compartment 11 for utensils to be washed and rinsed therein." Andrew, 2:53-55. Figure 1, annotated below, shows the upper dish rack (green) above the first lower dish rack (yellow) and second lower dish rack (red) within the dishwasher tub (purple).

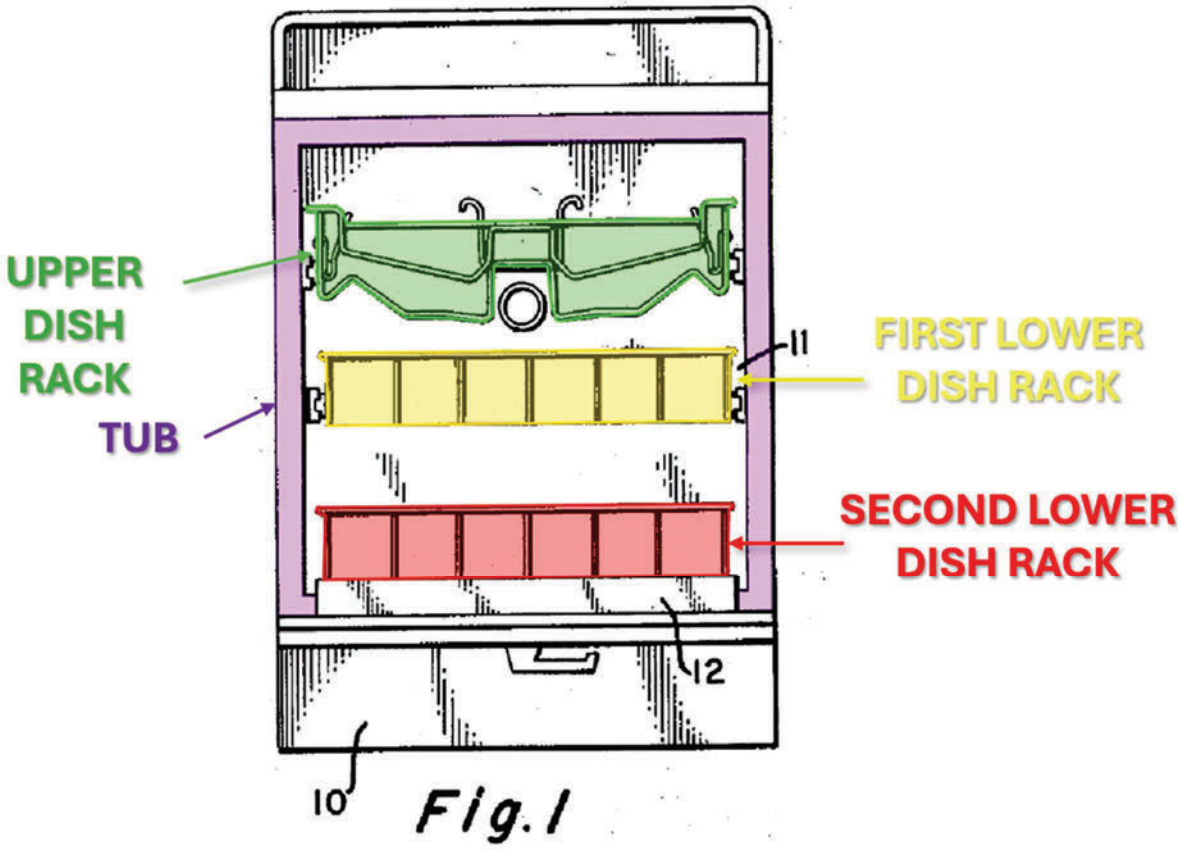

e. Element 1[c][ii]: the upper dish rack defining a planar portion and a depression,

137. Andrew in view of Carr renders obvious Element 1[c][ii]. Specifically, Andrew discloses that the upper dish rack has a "[b]ase portion 35 of the U-shaped wire members extend[ing] transversely across the two central rails 34 and . . . provid[ing] a flat support on rack 14. . . . This flat support and the supports or posts 37 cooperate with one another to selectively receive and support long knives or the like in a horizontal position." Andrew, 3:45-52. The flat support (red, below) is illustrated in Figure 5 and is a planar portion of the upper rack.

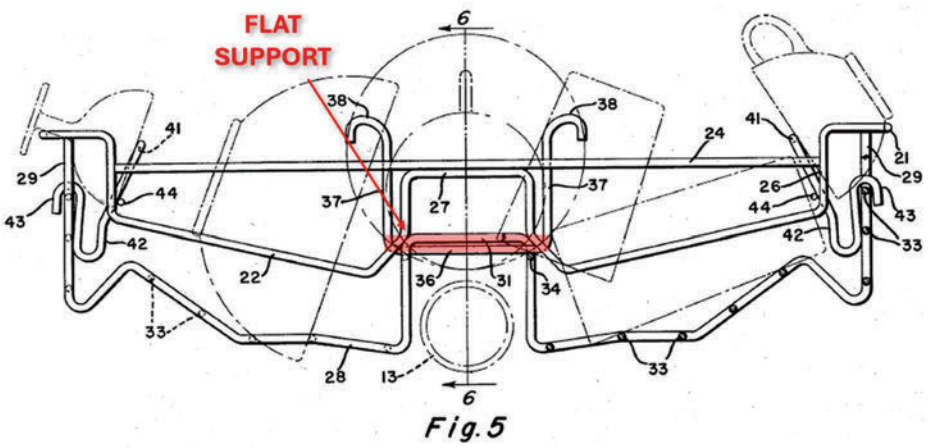

Fig. 5

138. Andrew further discloses a depression shown in orange in Figure 5 below. Specifically, Andrew discloses wire rails 33 "provid[e] the bordering portions of the basket-like receptacle, are progressively elevated with respect to one another . . . to provide inclined bottom portions therefor." Andrew, 3:25-28. The design further allows for "utensils placed on the rails 33 of the bottom portions of the rack." *Id.*, 3:43-45.

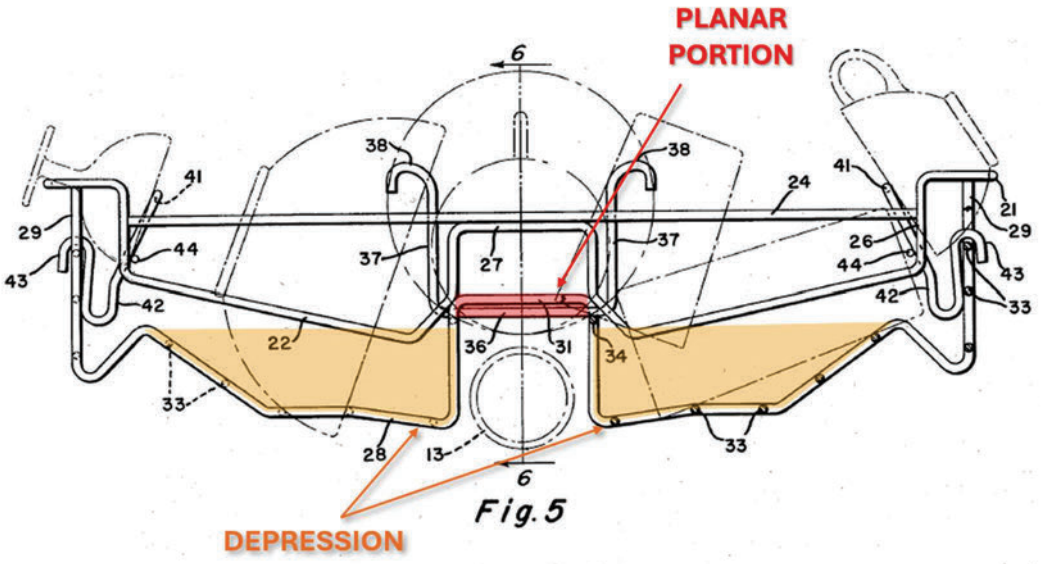

f. Element 1[c][iii]: wherein the depression includes a first angled wall and a second angled wall that each extend at an acute angle relative to the planar portion, and

139. Andrew in view of Carr renders obvious Element 1[c][iii]. Specifically, wire rails 33 "provid[e] the bordering portions of the basket-like receptacle, are progressively elevated with respect to one another . . . to provide inclined bottom portions therefor." Andrew, 3:25-28. The design further allows for "utensils placed on the rails 33 of the bottom portions of the rack." *Id.*, 3:43-45. "[R]ails 33 extend[] between and hav[e] their ends welded to front and rear portions of the rack," where the front and rear portions are bar 28. *Id.*, 3:14-15. Andrew's first bar 28 (blue, below) and second bar 28 (yellow, below) form an "inclined bottom rack portion[]." *Id.*, 4:1-2. As can be observed in Figure 5, annotated below, the bars are disposed at an acute angle relative to the horizontal planar portion.

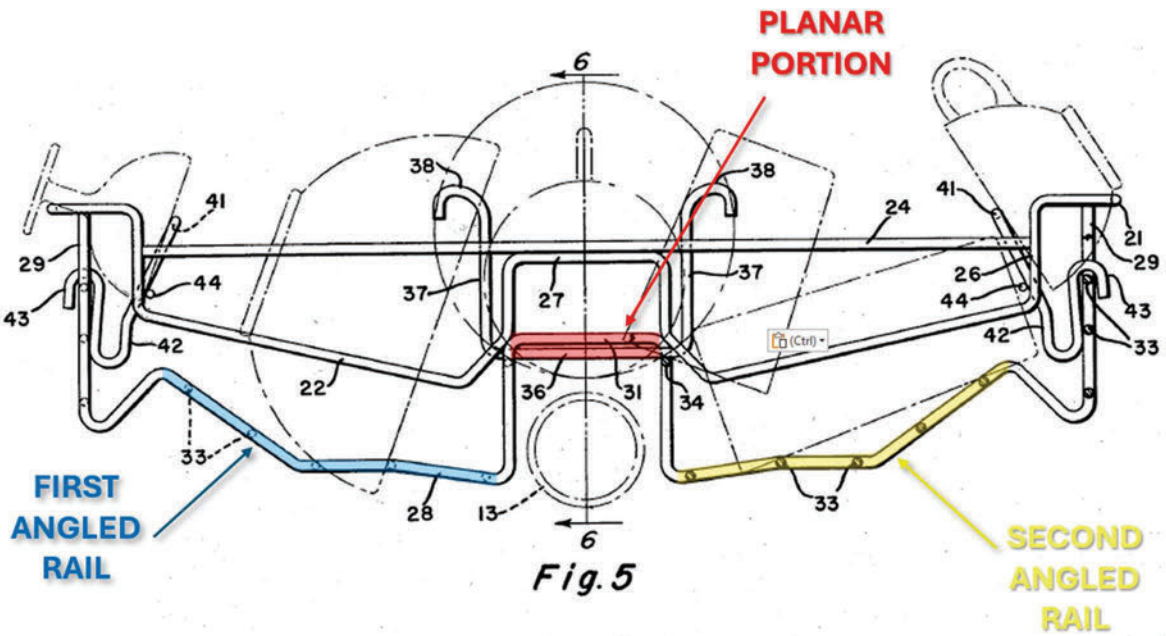

g. Element 1[d]: wherein the first angled wall defines a first set of cup seats, and wherein the second angled wall defines a second set of cup seats;

140. Andrew in view of Carr renders obvious Element 1[d]. Specifically, Andrew explains that it allows for "utensils placed on the rails 33 of the bottom portions of the rack." Andrew, 3:43-45. Andrews explains that "utensils" includes "metal knives, forks, spoons, pans or bowls and ceramic dishes or glassware such as coffee or tea ***cups***, saucers, plates, tumblers, and drinking glasses or culinary items of different kinds." *Id.*, 2:33-37. As can be seen in Figure 5, annotated below, first bar 28 (blue) and second bar 28 (yellow) form a support for utensils, such as cups, at an inclined angle. Andrew also provides bars 22, 23, and 24 to "prevent round utensils such as glasses or bowls placed on the inclined bottom portions of the basket-like receptacle from sliding off the wire supports 33. *Id.*, 29-33. Thus, the angled bars 28 and 28 both define separate cup seats for holding cups.

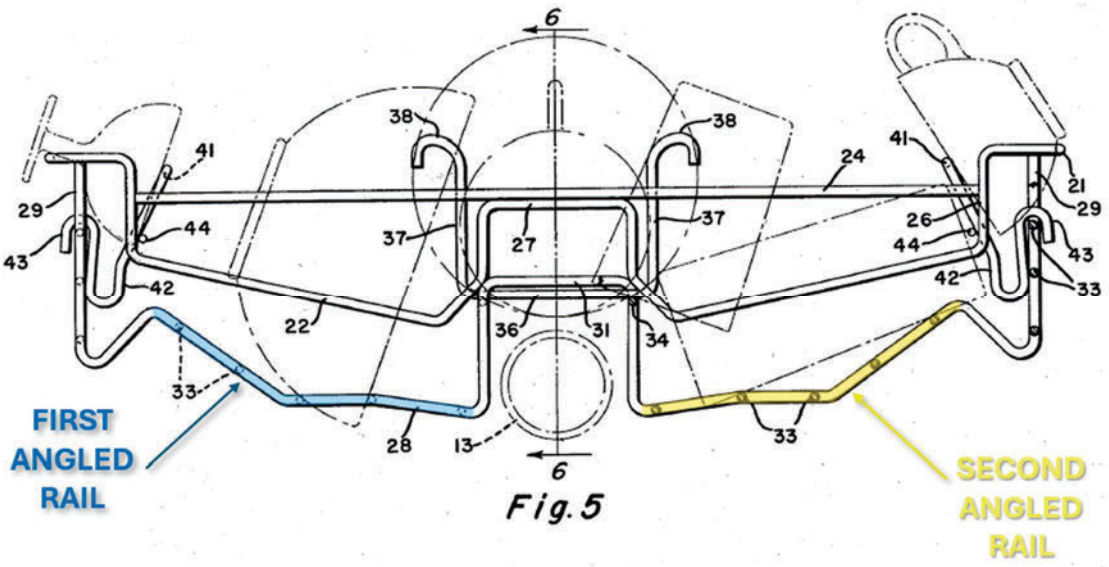

Fig. 5

h. Element 1[e]: wherein the planar portion includes a plurality of utensil holders configured to horizontally support utensils; and

141. Andrew in view of Carr renders obvious Element 1[e]. Carr discloses the use of utensil holders in a planar portion. Carr explains the washware rack, "at a location directly above the notch section 220, is configured to accommodate at least one of cutlery or utensils. A cutlery/utensil accessory insert 235 is shown in FIG. 3 disposed above the notch section 220." Carr, [0048]. Figure 3, illustrated below, depicts the plurality of utensil holders (pink) sitting on the planar portion (red).

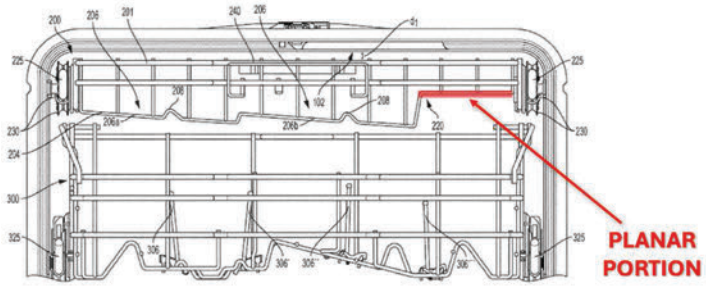

FIG. 4

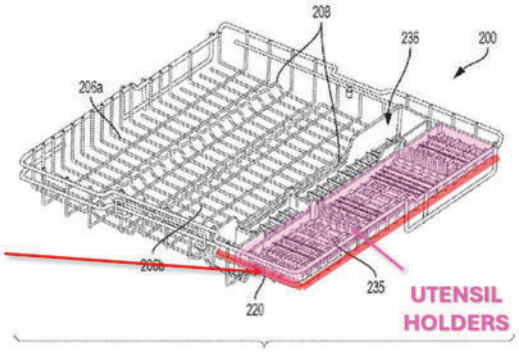

FIG. 3

142. Carr's Figure 3 further shows the series of loops and seats in order for cutlery/utensils to sit in the top rack, depicted in the zoom-in annotated version of that figure below. The utensil accessory insert is thus a utensil holder which supports one or more utensils, in the same way described by the '922 Patent: "first set of utensil holders illustrated as a set of utensil seats 126 or loops 128. The utensil holders can be configured to retain or hold a set of utensils such as, but not limited to, spoons, forks, sporks, knives, ladles, spatulas, or the like." '922 Patent, 6:54-58. Although not illustrated in Figure 3, the utensils would naturally sit horizontally between the series of loops and seats.

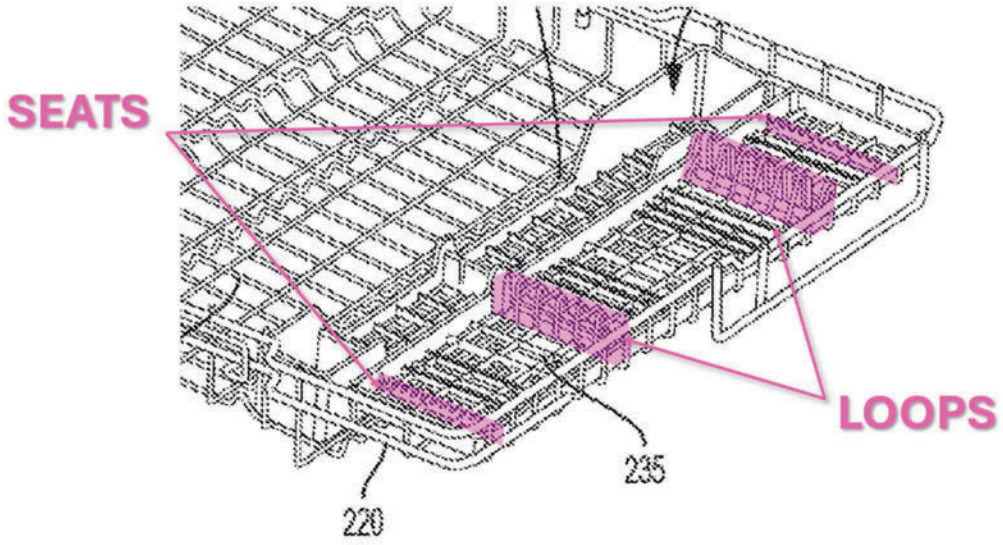

143. As I explained above, a POSITA would have found it obvious to modify Andrew's dish rack to include the utensil holders of Carr on Andrew's flat support section (red, below). Andrew explains that the "flat support and the supports or posts 37 cooperate with one another to selectively receive and support long knives or the like in a horizontal position." Andrew, 3:45-52. Andrew additionally adds that the "rack is flexible and versatile" and that it can accommodate "widely diversified arrangements or combinations of utensil support" without diverging from the scope of the invention. *Id.*, 60-68. A POSITA in possession of Carr's teachings would thus find it obvious to include the utensil holder design in Carr to effectively carry out the washing function.

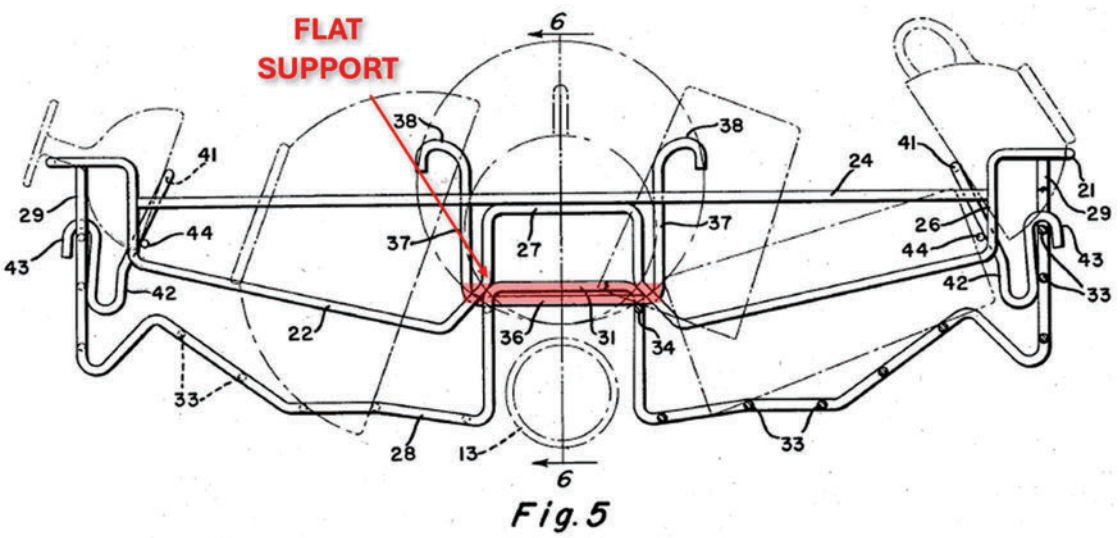

Fig. 5

i. Element 1[f]: wherein the depression extends entirely below a top of the utensil holders in the planar portion.

144. Andrew discloses and/or renders obvious Element 1[f]. Specifically, Andrew's depression extends lower than the top of the utensil holder. Andrew's bars 28 create a depression at an angle relative to flat support section and extend lower than the flat section so that a cup or bowl can sit within the depression. Andrew, 3:33-45, 4:1-2.

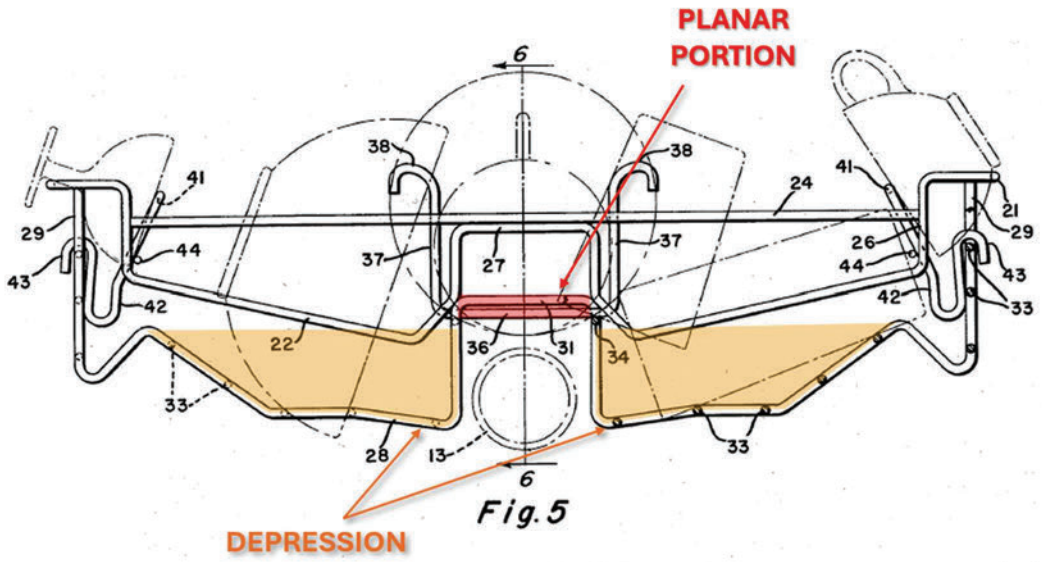

Fig. 5

145. Although not depicted in Figure 5, Carr's utensil holder sits above the flat support section. The top of the utensil holder would therefore be above the flat support section. As the depression is shown to be fully below the flat support section, the depression would further be fully below the top of the utensil holder.

3. Dependent Claim 2: The dishwasher of claim 1, wherein the plurality of utensil holders is disposed in a utensil caddy operably coupled to the planar portion.

146. Andrew in view of Carr renders obvious Claim 2. As explained above, Carr discloses "cutlery/utensil accessory insert 235 is shown in Fig. 3 disposed above the notch section 220." Carr, [0048]. Carr further explains that the insert may be removed to fit additional washware. *Id.*, [0049].

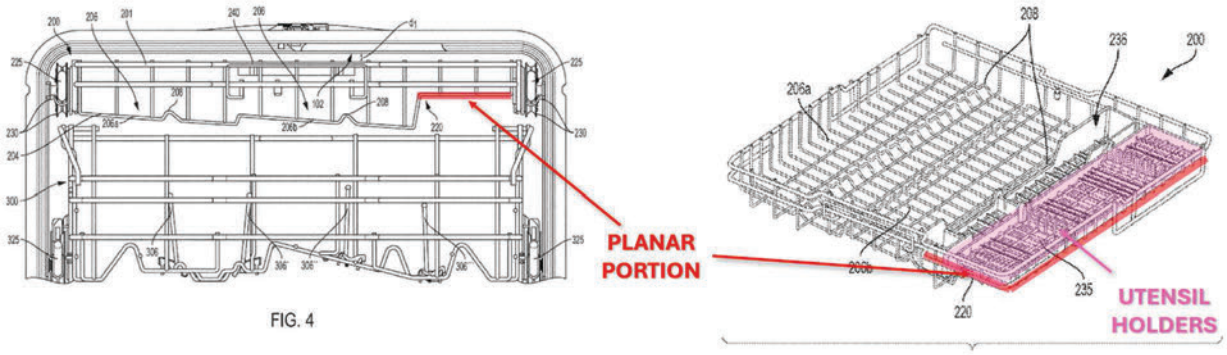

147. Therefore, Carr's utensil holders are operably coupled to the planar portion. When combined with the teachings of Andrew, it would further be operably coupled to the flat support section in Andrew shown below in Figure 5.

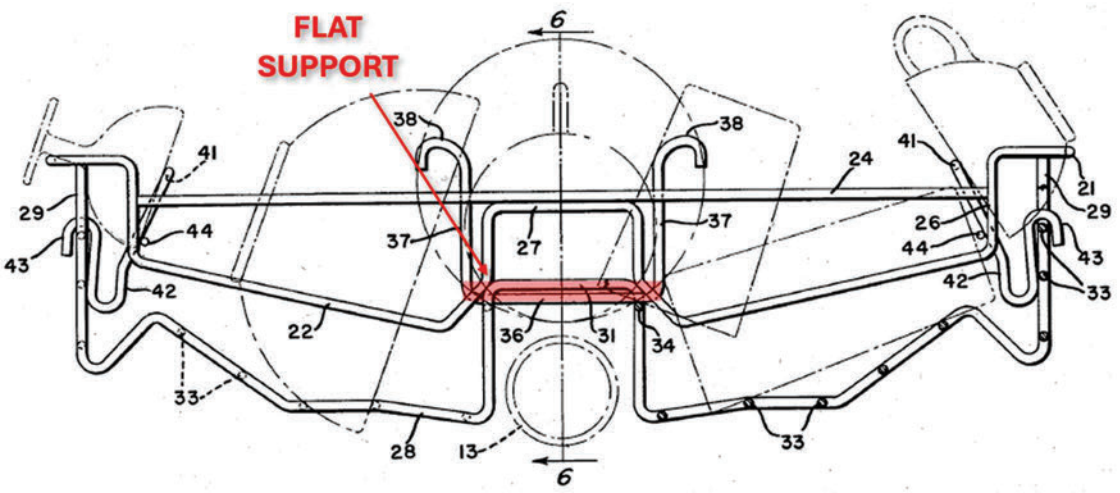

Fig. 5

4. Dependent Claim 3: The dishwasher of claim 2, wherein the utensil caddy includes a basket that is removably coupled with a bottom wall of the planar portion.

148. Andrew in view of Carr renders obvious Claim 3. As explained above, Carr discloses "cutlery/utensil accessory insert 235 is shown in Fig. 3 disposed above the notch section 220." Carr, [0048]. Carr further explains that the insert may be removed to fit additional washware. *Id.*, [0049]. The utensil accessory insert is a basket, in the same way described by the '922 Patent: "[o]ther dish holders can be provided, such as a silverware basket, separate from or combined with third level, upper, and lower dish racks." '922 Patent, 3:28-30. When combined with the teachings of Andrew, Carr's utensil caddy would further include a basket removably coupled from the flat support section.

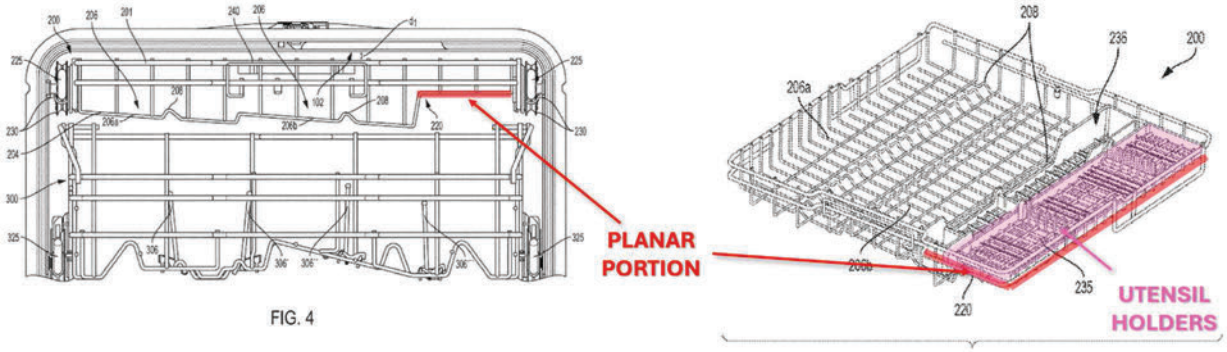

5. Dependent Claim 4: The dishwasher of claim 2, wherein the utensil caddy defines a periphery defining an interior with an open top.

149. Andrew in view of Carr renders obvious Claim 4. As explained above, Carr discloses "cutlery/utensil accessory insert 235 is shown in Fig. 3 disposed above the notch section 220." Carr, [0048]. The '922 describes a periphery, for example, as "having at least first and second opposing side walls." '922 Patent, 11:9-11. As illustrated in Figure 3, Carr's utensil insert has two sets of opposing side walls forming a periphery (purple) with an open top (green).

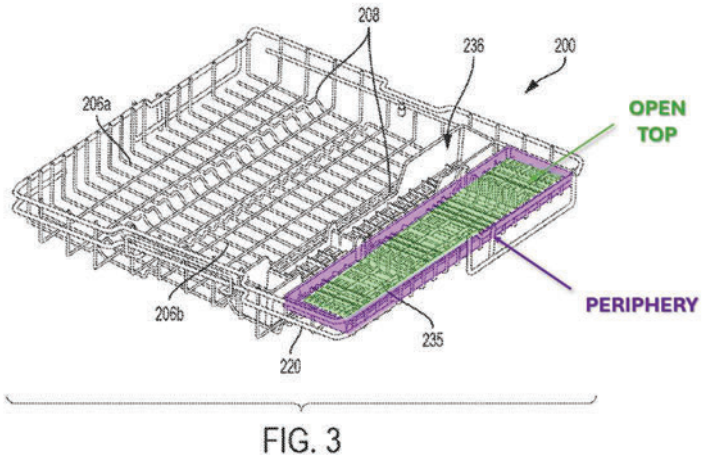

6. Dependent Claim 7: The dishwasher of claim 2, further comprising: at least one sprayer adjacent to the first set of cup seats and configured to emit a spray of water into a cup held by the first set of cup seats.

150. Andrew in view of Carr renders obvious claim 7. Andrew discloses a "liquid spray tube 13 is located centrally within compartment 11 and extends forwardly of the rear wall thereof for spraying a plurality of streams of water in various directions . . . and onto utensils." Andrew, 2:43-47. Andrew states rack 14 is designed to "provide[] ample and proper support for washing, rinsing, and draining of tumblers, ***cups***, saucers, . . . and drinking glasses. *Id.*, 4:19-22. As I previously explained, the first bar 28 (blue) and second bar 28 (yellow) for cup seats. *See supra* Section VIII.D.2.g (claim element 1[d]); *see also* Andrew, 3:43-35. As can be seen in Figure 5, annotated below, the liquid spray tube 13 (red) is adjacent to the first cup seat (blue).

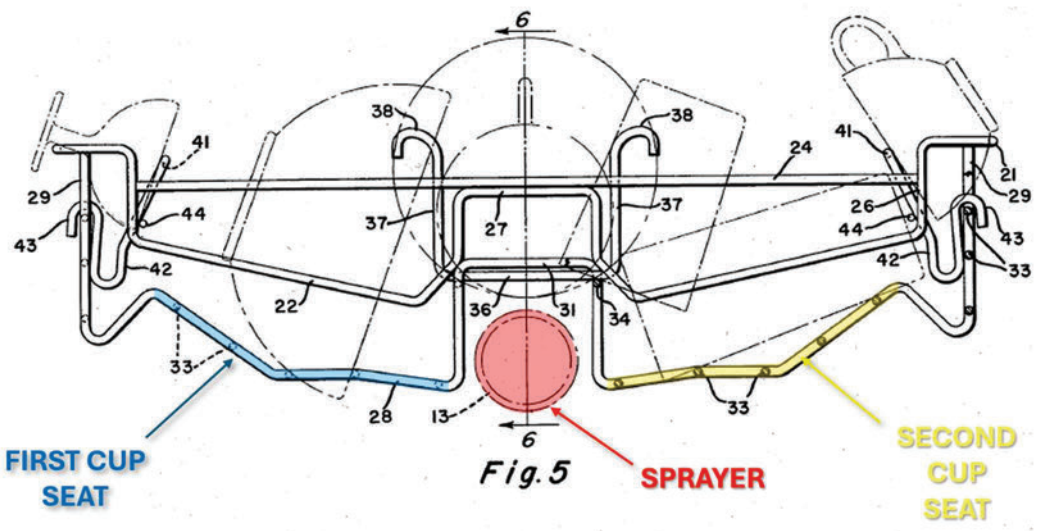

151. Although Figure 5 of Andrew only depicts a cup on the above annotated second cup seat, a POSITA would understand that a cup may also be placed above the annotated first cup seat, as the overall rack 14 is symmetrical. Thus, sprayer 13 would wash and rinse (i.e., emit a spray of water into) the adjacent cups held by the first cup seat.

7. Dependent Claim 8: wherein the at least one sprayer is located between the first set of cup seats and the second set of cup seats.

152. Andrew in view of Carr renders obvious claim 8. As I explained for claim 7, Andrew discloses the liquid spray tube 13 being adjacent to the first set of cup seats. *See supra* Section VIII.D.6 (claim 7). Andrew further discloses the sprayer is between the first and second set of cup seats. Andrew explains that the upper rack "straddles a centrally located liquid spray tube." Andrew, 1:59-60. As can be seen in Figure 5, annotated below, the spray tube (red) is between the first cup seat (blue) and second cup seat (yellow).

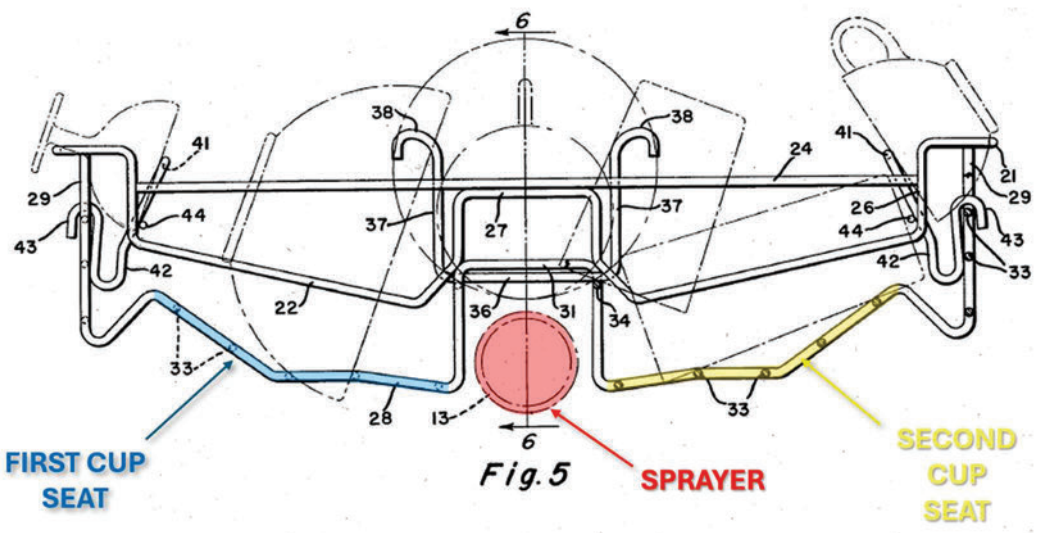

8. Dependent Claim 9: The dishwasher of claim 7, wherein the at least one sprayer extends from a front of the upper dish rack to a back of the upper dish rack.

153. Andrew in view of Carr renders obvious claim 9. Andrew discloses a "liquid spray tube 13 is located centrally within compartment 11 and extends forwardly of the rear wall." Andrew, 2:43-45. Andrew explains that the central portion of rack 14 "straddles a centrally located liquid spray tube." *Id.*, 1:60-61. The design of the rack and its utensil support "affords entrance of ample water from the sprayed streams thereof from [spray] tube 13 into each cup." *Id.*, 4:47-49. As can be seen in Figure 2, annotated below, the liquid spray tube 13 (red) extends the depth

of the washing compartment 11, and therefore from the front of the upper dish rack to the back of the upper dish rack.

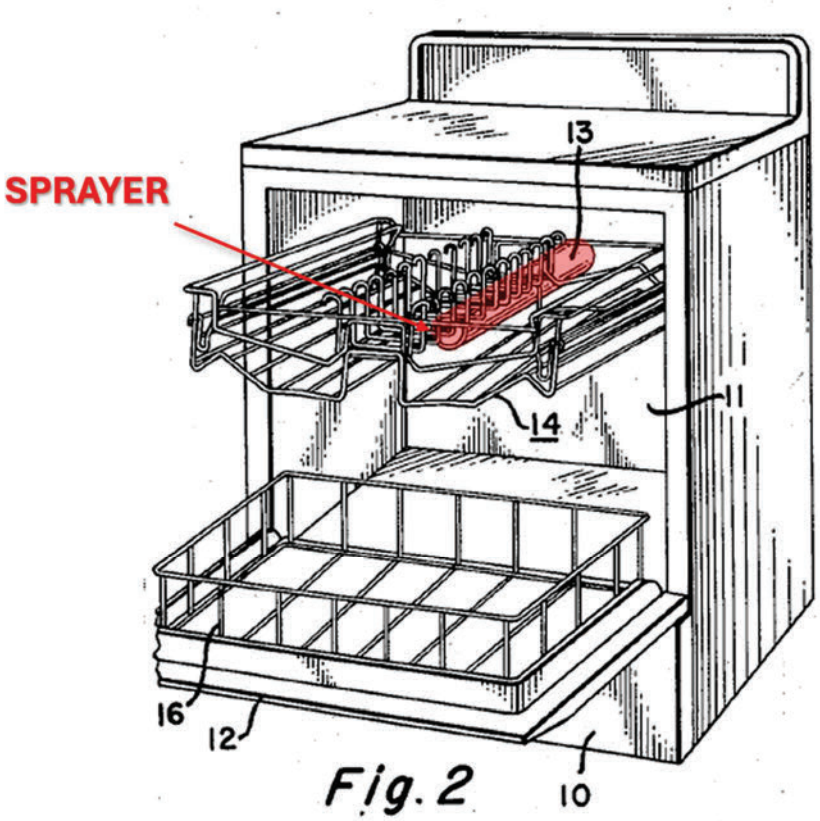

9. Dependent Claim 10: The dishwasher of claim 7, wherein the at least one sprayer is also configured to emit the spray of water into a cup held by the second set of cup seats.

154. Andrew in view of Carr renders obvious claim 10. For the same reasons as claim 7, Andrew discloses the sprayer emitting the spray of water into a cup held by the second set of cup seats. *See supra* Section VIII.D.6 (claim 7). Andrew states rack 14 is designed to "provide[] ample and proper support for washing, rinsing, and draining of tumblers, ***cups***, saucers, . . . and drinking glasses. Andrew, 4:19-22. Spray tube is configured "for spraying a plurality of streams of water in various directions . . . and onto utensils" including the cup held by the second set of

cup seats. *Id.*, 2:45-47. As can be seen in Figure 5, annotated below, the cup held by the second set of cup seats (yellow) would receive a spray of water from the sprayer (red).

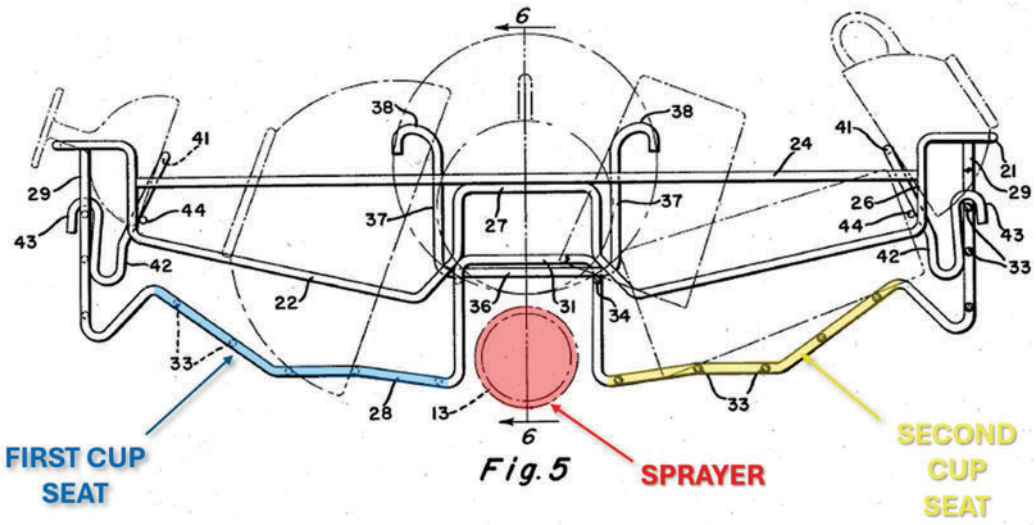

10. Dependent Claim 11: The dishwasher of claim 7, wherein the at least one sprayer is configured to provide a straight-line stream of water.

155. Andrew in view of Carr renders obvious claim 11. Andrew explains that liquid spray tube 13 is configured "for spraying a plurality of streams of water in various directions." Andrew, 2:43-45. When cups or bowls are arranged on the center rails 34, as seen in Figure 6 below, it "affords entrance of ample water from the sprayed streams [] from tube 13 into each cup and adjacent exterior cup surfaces form splash baffles for directing water striking one cup into another adjacent cup." *Id.*, 4:47-51. Although liquid spray tube 13 is not shown in Figure 6, I have annotated its approximate location in red below.

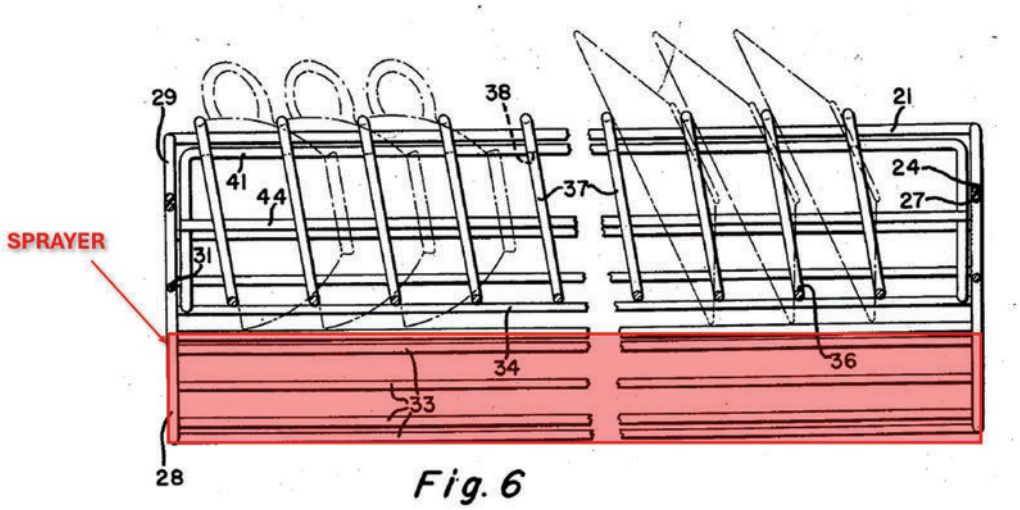

Fig. 6

156. Further, Andrew incorporates by reference U.S. Patent No. 2,734,520 to Abresch et al. for the "full and comprehensive description of details of such a dishwasher. Andrew, 2:58-63 ("as the present invention is concerned, it is particularly applicable to washing machines of the type shown in Abresch et al. Patent 2,734,520 . . . and this patent is referred to for a full and comprehensive description of details of such a dishwasher"). I have been informed that when a document is incorporated by reference by another document, as Andrew does with respect to Abresch, the incorporated document (here, Abresch) becomes a part of the incorporating document (here, Andrew). Abresch teaches that "[t]he spray tube is perforated to provide solid streams of water or cleansings liquid having sufficient force to thoroughly clean the articles." Abresch, 1:60-63. Figure 12, depicted below, illustrates "jets of liquid" 148, 150, 152 emitted form the perforated apertures on the spray tube. 4:23-59.

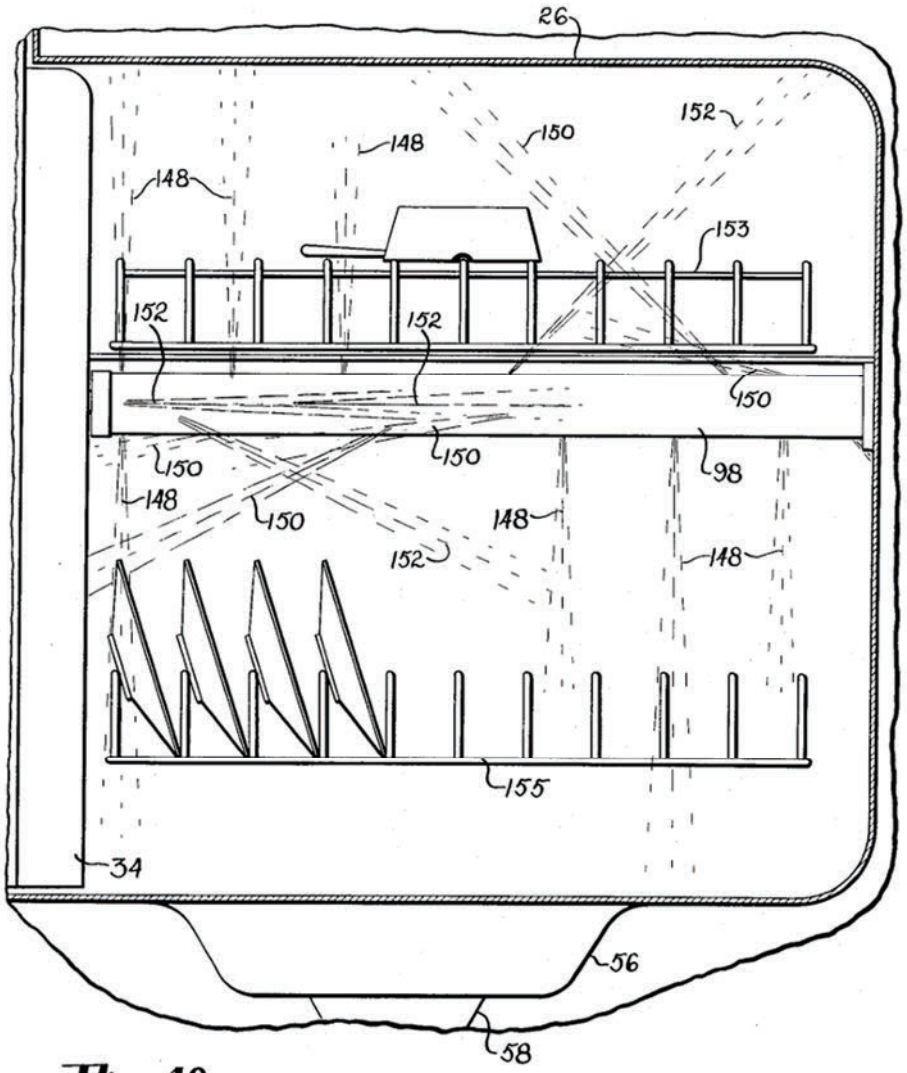

Fig. 12

157. Abresch's spray tube with jets of water is readily applied to the liquid spray tube 13 of Andrew. Abresch is simply providing additional information on how a POSITA would implement the liquid spray tube of Andrew. Andrew, therefore, discloses the limitations of claim 11.

11. Dependent Claim 12: The dishwasher of claim 7, wherein the at least one sprayer includes a plurality of nozzles, and wherein each of the spray nozzles is configured to rotate as the at least one sprayer emits the spray of water into the cup held by the first set of cup seats.

158. Andrew in view of Carr renders obvious claim 12. Andrew discloses a liquid spray tube 13, and as I explained for claim 11, Andrew further incorporates by reference Abresch. *See* Section VIII.D.10 (claim 11). Abresch teaches that its spray tube is "rotatably mounted." Abresch, 3:63-66. Abresch's spray tube "is provided with three vanes 145 projecting radially inward against which the rotating inlet water impinges to apply a rotating impulse." *Id.*, 4:16-18. Abresch's spray tube is further "formed with a series of longitudinal apertures 147, . . . which are arranged generally in the form of a helix on the tube 98. . . . All of these longitudinal apertures provide jets of liquid." *Id.*, 4:23-30. Abresch's longitudinal apertures 147 are a plurality of nozzles. Abresch Figures 6-11, below, illustrate the apertures along the spray tube, cross-sectional views of the spray tube, and sectional views of the apertures themselves.

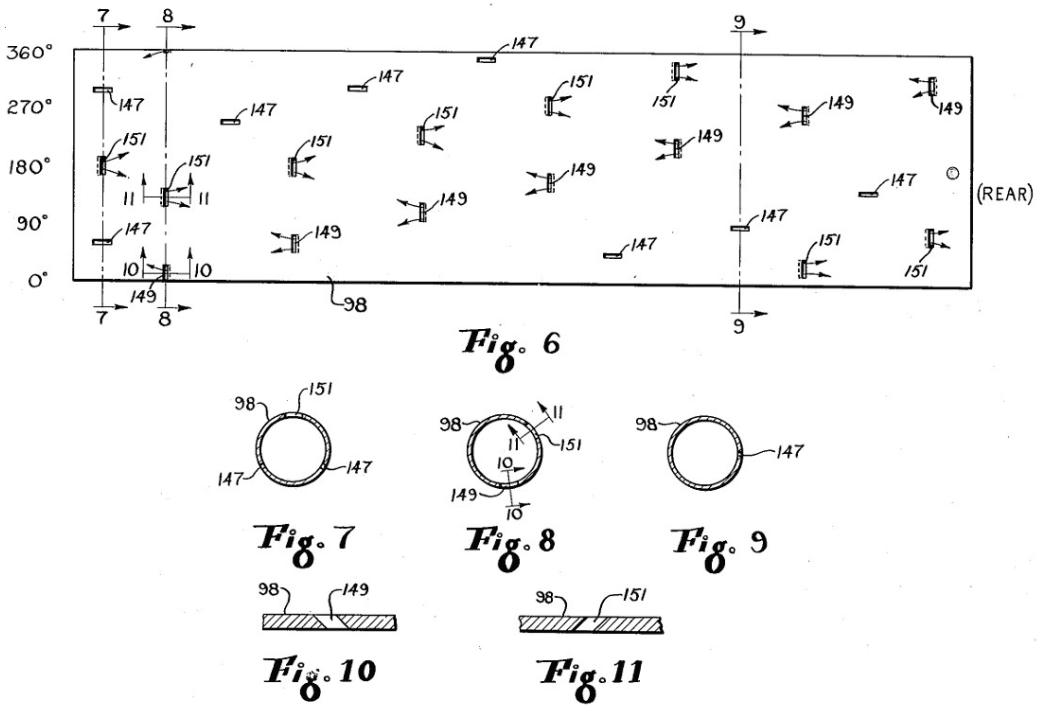

159. Abresch's rotating tube and apertures are readily applied to liquid spray tube 13 of Andrew. When the spray tube rotates, the nozzles located in a helical pattern on said tube rotate as well. As the tube spins, water would be sprayed into the cup held by the first set of cup seats. *See supra* Section VIII.D.6 (claim 7). Andrew, therefore, teaches "the at least one sprayer include[ing] a plurality of nozzles, and wherein each of the spray nozzles is configured to rotate as the at least one sprayer emits the spray of water into the cup held by the first set of cup seats."

12. Dependent Claim 13: The dishwasher of claim 7, wherein the utensil caddy includes a diffuser that diffuses the spray of water emitted by the at least one sprayer.

160. Andrew in view of Carr renders claim 13 obvious. As discussed above for non-infringement, I understand that it is Dr. Tanbour's position that a physical surface or structure (e.g., a side wall or containing wireframe structure) receiving and redirecting a stream of water from the sprayer may act as a diffuser. Tanbour '922 Declaration, 46. In view of this understanding of the term "diffuser," Andrew teaches the requirements of claim 13.

161. Andrew, as modified by Carr, has a utensil caddy placed on the flat support section of rack 14. *See supra* Section VIII.D.2.h (claim element 1[e]). The bottom wall of the utensil caddy (pink, below) sits above liquid spray tube 13. Streams of water emitted from the spray tube would thereby strike the bottom wall of the utensil caddy and become diffused.

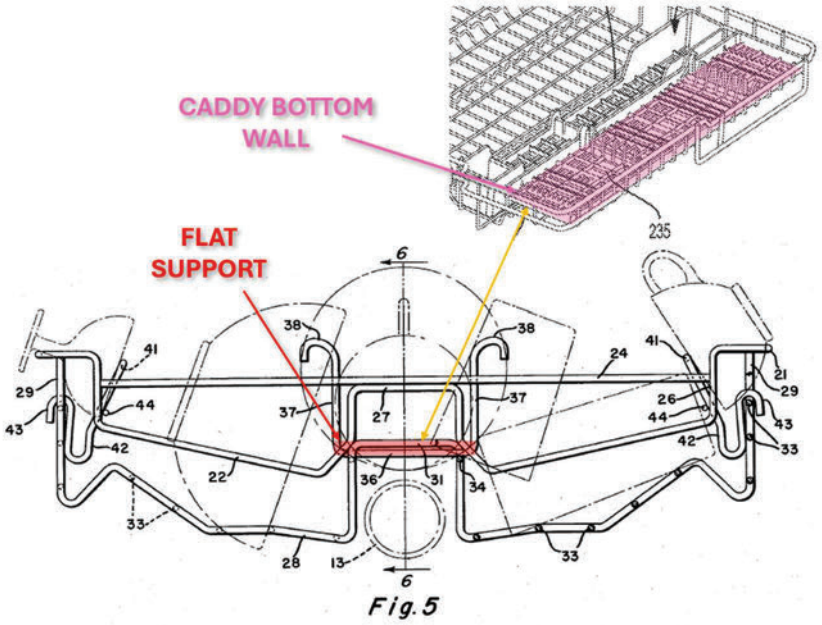

Fig. 5

13. Dependent Claim 14: The dishwasher of claim 7, wherein the at least one sprayer is configured to emit a straight-line stream of water to the planar portion of the upper dish rack.

162. Andrew in view of Carr renders obvious claim 14. As I explained for claim 11, Andrew's liquid spray tube emits a straight-line stream of water. *See* Section VIII.D.10 (claim 11); *see also* Andrew, 4:47-51. Andrew explains that the sprayer is configured "for spraying a plurality of streams of water in various directions.," including to the flat support section directly above said spray tube. Andrew, 2:43-45. As such, the at least one sprayer will emit a straight-line stream of water to the planar portion (red).

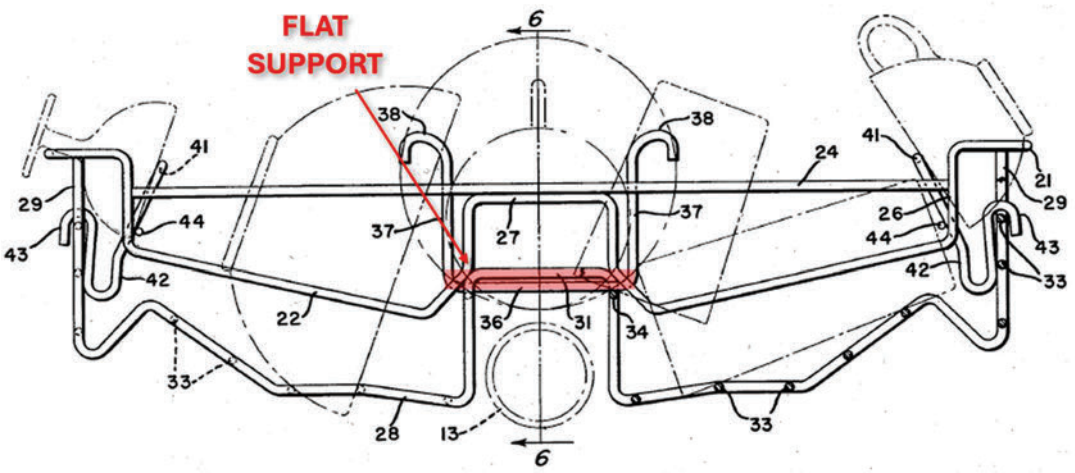

Fig. 5

14. Dependent Claim 15: The dishwasher of claim 7, wherein the at least one sprayer is configured to emit a fan pattern of water.

163. Andrew in view of Carr renders obvious claim 15. I understand from Dr. Tanbour's declaration that he considers a diffused stream of water as creating a fan pattern as is recited in claim 15. Tanbour '922 Declaration, ¶ 99 (annotating a figure as showing a "Diffused stream of water. Forms a fan pattern covering a larger area…"). In view of this understanding of the term "fan pattern of water," Andrew teaches the requirements of claim 15.

164. As I explained for claim 13, Andrew's spray tube emits a stream of water that is diffused by the bottom wall of the utensil caddy. *See* Section VIII.D.12 (claim 13). Under Dr. Tanbour's understanding of "a fan pattern of water," Andrew-Carr's diffused stream of water constitutes said fan pattern as required by claim 15.

15. Dependent Claim 16: The dishwasher of claim 1, wherein the first set of cup seats is configured to support a set of cups and the second set of cup seats is configured to support a set of mugs.

165. Andrew in view of Carr renders obvious claim 16. As I explained for claim element 1[d], Andrew's bars 28 form a first set of cup seats and a second set of cup seats. *See* Section VIII.D.2.g (element 1[d]). Andrew allows for "utensils placed on the rails of the bottom portions

of the rack." Andrew, 3:43-45. As shown in Figure 5, annotated below, utensils may include a cup. Further, Andrew explains that a utensils also may include "glassware such as ***coffee or tea cups***." Andrew, 2:30-37. A POSITA would understand a coffee cup is or could be a "mug." Thus, the first set of cup seats is configured to support a set of cups and the second set of cup seats is configured to support a set of mugs.

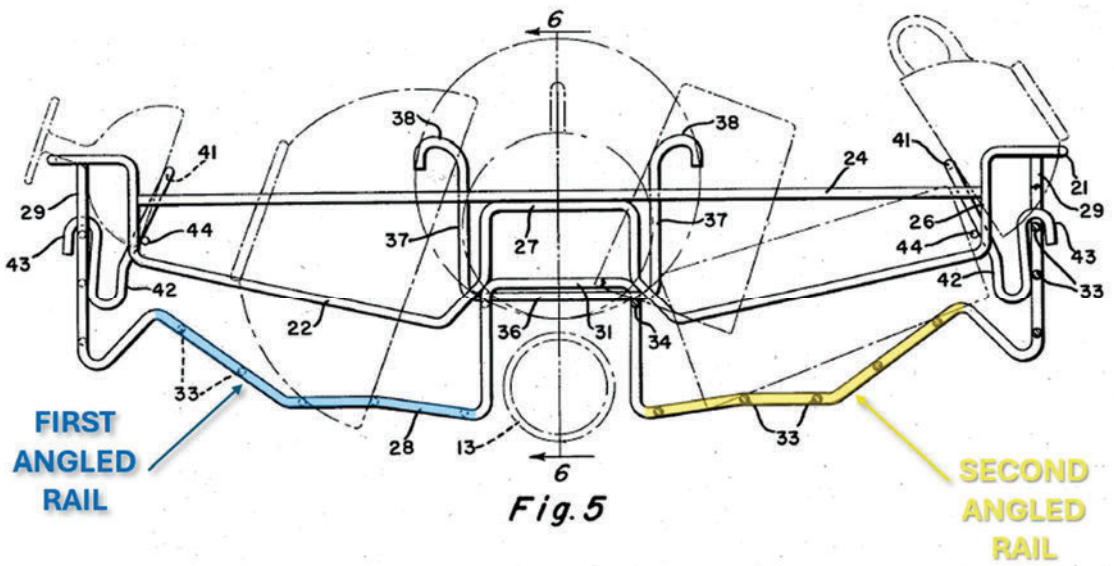

16. Dependent Claim 17: The dishwasher of claim 7, wherein the at least one sprayer is located between the first set of cup seats and second set of cup seats, the at least one sprayer configured to emit a spray of water into drinking vessels held by the first set and second sets of cup seats.

166. Andrew in view of Carr renders obvious claim 17. As I explained for claim 8, the liquid spray tube 13 is located between the first set of cup seats and the second set of cup seats. *See* Section VIII.D.7 (claim 8). Further, the liquid spray tube is configured to emit a spray of water into vessels held by the first and second set of cup seats. Andrew explains that a "liquid spray tube 13 is located centrally within compartment 11 and extends forwardly of the rear wall thereof for spraying a plurality of streams of water in various directions . . . and onto utensils." Andrew, 2:43-47. Andrew states rack 14 is designed to "provide[] ample and proper support for washing, rinsing,

and draining of tumblers, ***cups***, saucers, . . . and drinking glasses. *Id.*, 4:19-22. As is shown in Figure 5, annotated below, the sprayer (red) emits a spray of water in the vessels held by the first cup seat (blue) and second cup seat (yellow).

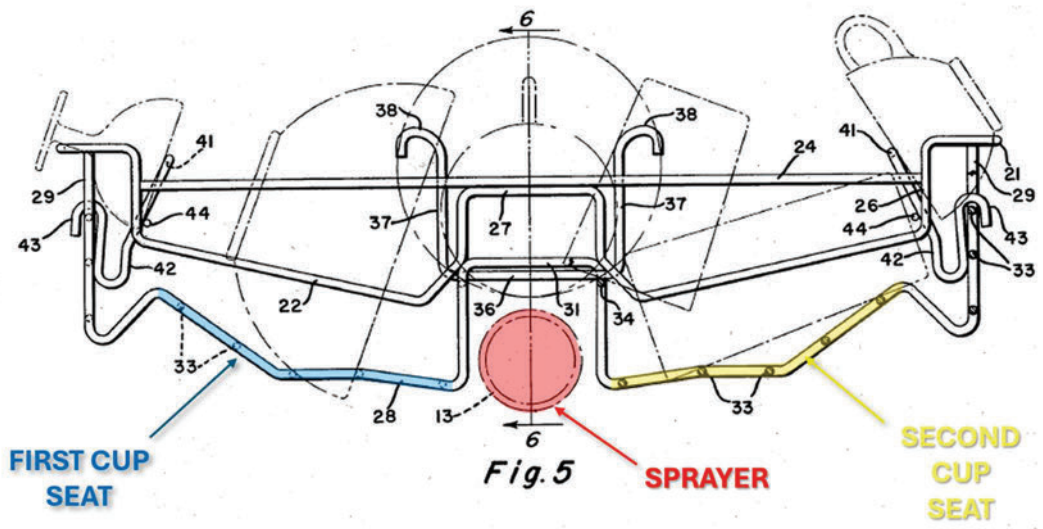

17. Dependent Claim 18: The dishwasher of claim 7, wherein a portion of the spray of water emitted by the at least one sprayer is directed toward the plurality of utensil holders.

167. Andrew in view of Carr renders claim 18 obvious. Andrew explains that a "liquid spray tube 13 is located centrally within compartment 11 and extends forwardly of the rear wall thereof for spraying a plurality of streams of water in various directions . . . and onto utensils." Andrew, 2:43-47. This includes toward the plurality of utensil holders placed on the planar surface immediately above the liquid spray tube. When center rails 34 above the spray tube are used to hold cups or bowls, Andrew explains that water is upward "from tube 13 into each cup." *Id.*, 4:47-50. Thus, when the recited utensil holders are placed above the sprayer, a portion of the water emitted by the at least one sprayer will be directed toward the utensil holders.

18. Dependent Claim 19: The dishwasher of claim 7, wherein the upper dish rack includes a wire frame construction that forms the first angled wall and second angled wall.

168. Andrew in view of Carr renders obvious claim 19. As explained in claim element 1[c][iii], bars 28 serve as the recited first angled wall and second angled wall. *See* Section VIII.D.2.f (claim element 1[c][iii]). Andrew further discloses the angled walls being formed of a wire frame construction. Andrew explains that "[a]ll of the wire elements, bars 22, 24 ***28***, rails 33, 34, 41 and 44 and other wire members of rack 14 may be coated with some suitable resilient substance such as natural or synthetic rubber or vinyl material." Andrew, 4:13-17. Andrew therefore teaches the requirements of claim 19.

19. Dependent Claim 20: The dishwasher of claim 19, wherein the wire frame construction also forms the planar portion and side walls of the upper dish rack.

169. Andrew in view of Carr renders obvious claim 20. As I explained in claim 19, the rails forming the claimed angled walls have a wire frame construction. *See* Section VIII.D.18 (claim 19). The planar portion and side walls are formed from a wire frame construction.

170. Andrew states "[r]ack 14 also comprises a plurality of substantially U-shaped wire members spaced apart along the two central rails 34." Andrew, 3:34-37. The U-shaped member and central rails form the recited planar portion. Andrew further discloses that "upper rack 14 comprises a perimeter metal wire having straight portions providing opposed horizontal ***side rails***." *Id.*, 2:69-71. Thus, Andrew has a planar portion and side walls of a wire frame construction.

20. Dependent Claim 21: The dishwasher of claim 19, wherein a plurality of spray nozzles of the at least one sprayer are located beneath the wire frame construction.

171. Andrew in view of Carr renders obvious claim 21. As I explained in claims 18 and 19, rack 14 is of a wire frame construction. *See* Sections VIII.D.18-19 (claims 19-20). The plurality of spray nozzles are further located beneath the wire frame construction. As can be seen

below, liquid spray tube 13 (red) is located below base portion 36 of the U-shaped wire members. Andrew, 3:57-60. As I explained in claim 12, Abresch's spray tube (incorporated herein) is formed with a series of apertures (nozzles). *See* Section VIII.D.11 (claim 12).

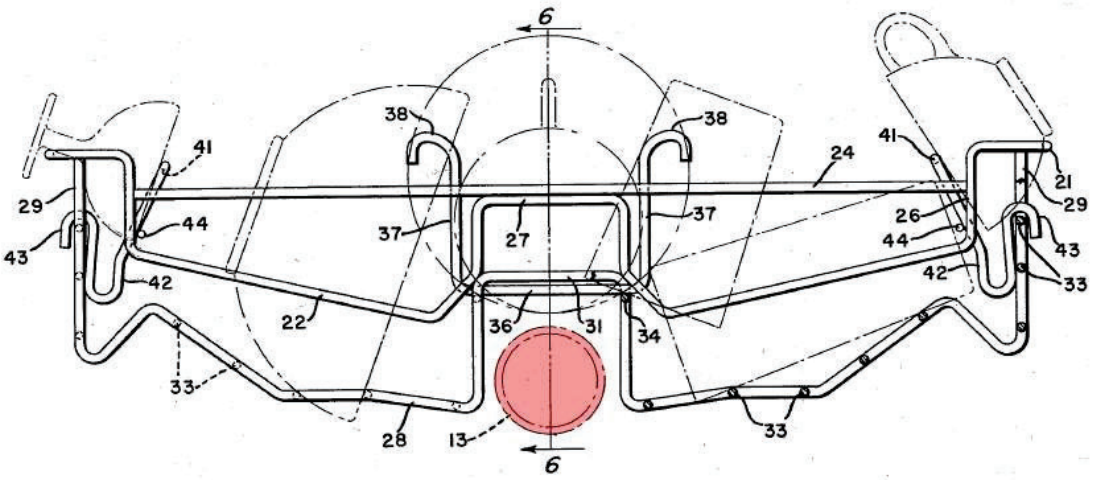

Fig. 5

21. Dependent Claim 22: The dishwasher of claim 21, wherein the plurality of spray nozzles are configured to rotate during said dishwasher operation.

172. Andrew in view of Carr renders obvious claim 22. As I explained in claim 12, the spray nozzles located on the spray tube of Andrew are configured to rotate, based on the incorporated disclosures of Abresch. *See* Section VIII.D.11 (claim 12). Said nozzles are further disposed beneath the wire frame construction. *See* Section VIII.D.20 (claim 21). Andrew-Carr, therefore, teaches the limitations of claim 22.

22. Dependent Claim 23: The dishwasher of claim 21, wherein the wire frame construction includes a raised section disposed between the first set of cup seats and the second set of cup seats.

173. Andrew in view of Carr renders obvious claim 23. Andrew discloses that the upper rack "straddles a centrally located liquid spray tube." Andrew, 1:59-60. Andrew further states "[r]ack 14 also comprises a plurality of substantially U-shaped wire members spaced apart along

the two central rails 34." *Id.*, 3:34-37. Element 36 (purple) is the base of the U-shaped wire and is disposed between the first cup seats (blue) and second cup seats (yellow). As can be seen in Figure 5, annotated below, element 36 constitutes a raised section that is both above and between the first and second set of cup seats.

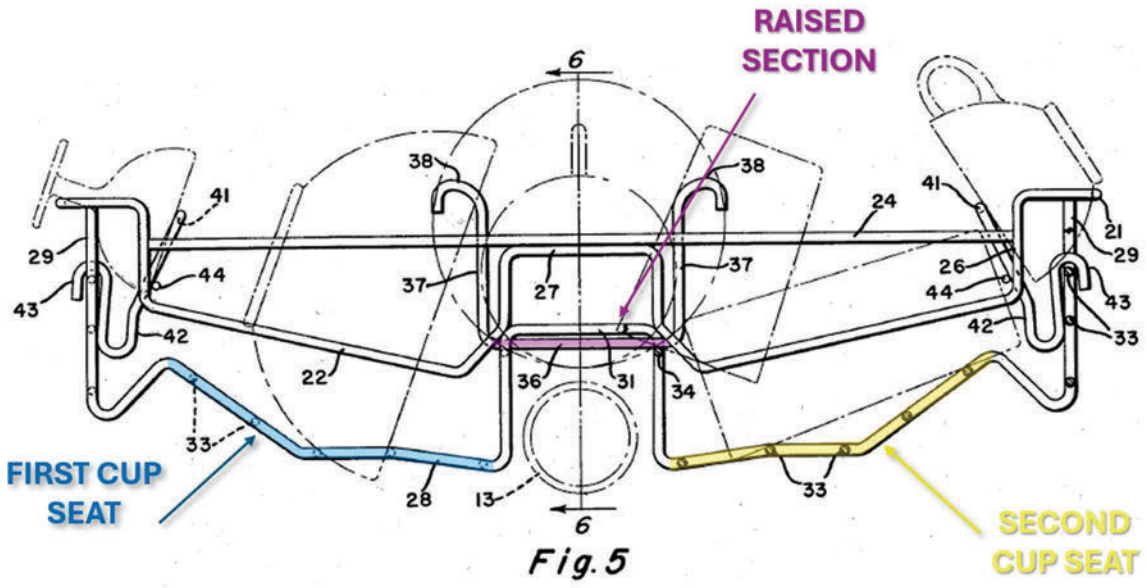

23. Dependent Claim 24: The dishwasher of claim 23, wherein the plurality of spray nozzles are disposed below a portion of the raised section.

174. Andrew in view of Carr renders obvious claim 24. As I explained for claim 12, Andrew's liquid spray tube 13 has a series of apertures (spray nozzles). *See* Section VIII.D.11 (claim 12). As can be seen in Figure 5, annotated below, the apertures of spray tube 13 (red) are disposed below the raised section (purple).

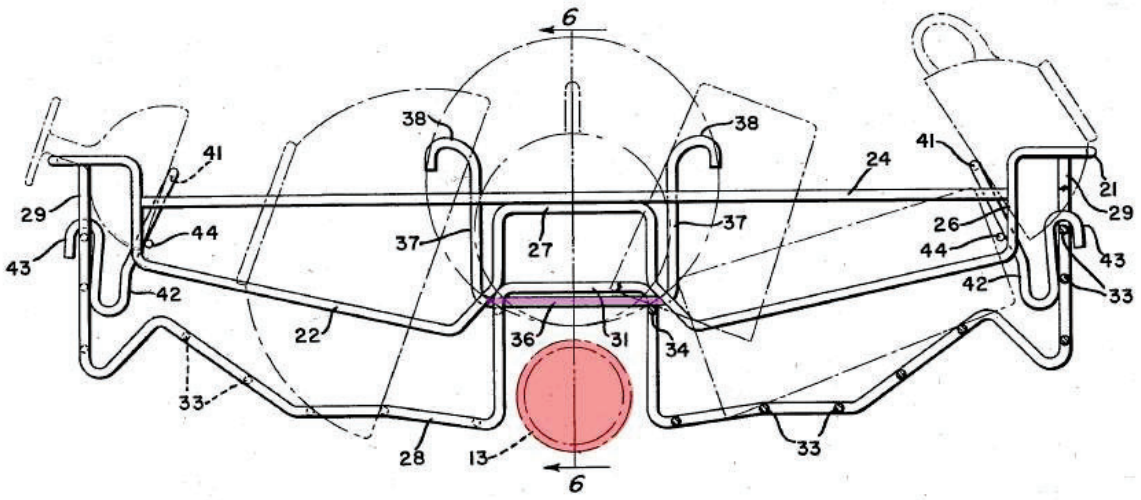

Fig. 5

24. Dependent Claim 25: The dishwasher of claim 7, wherein a lowermost portion of the first set of cup seats and a lower most portion of the second set of cup seats is disposed below the at least one sprayer.

175. Andrew in view of Carr render obvious claim 8. As I explained for claim 11, Andrew incorporates by reference the Abresch patent. *See* Section VIII.D.10 (claim 11). Abresch also discloses a spray tube and upper rack. Abresch teaches "the upper rack may be used or both flat articles and cupped articles since the cupped articles can be supported in the upper rack in an inverted position and receive in their interior jets of water directly from the spray tube 98." Abresch, 5:74-6:3. As can be seen in Abresch's Figure 2, annotated below, the lowermost portions of the upper rack (green) are disposed below the spray tube (red).

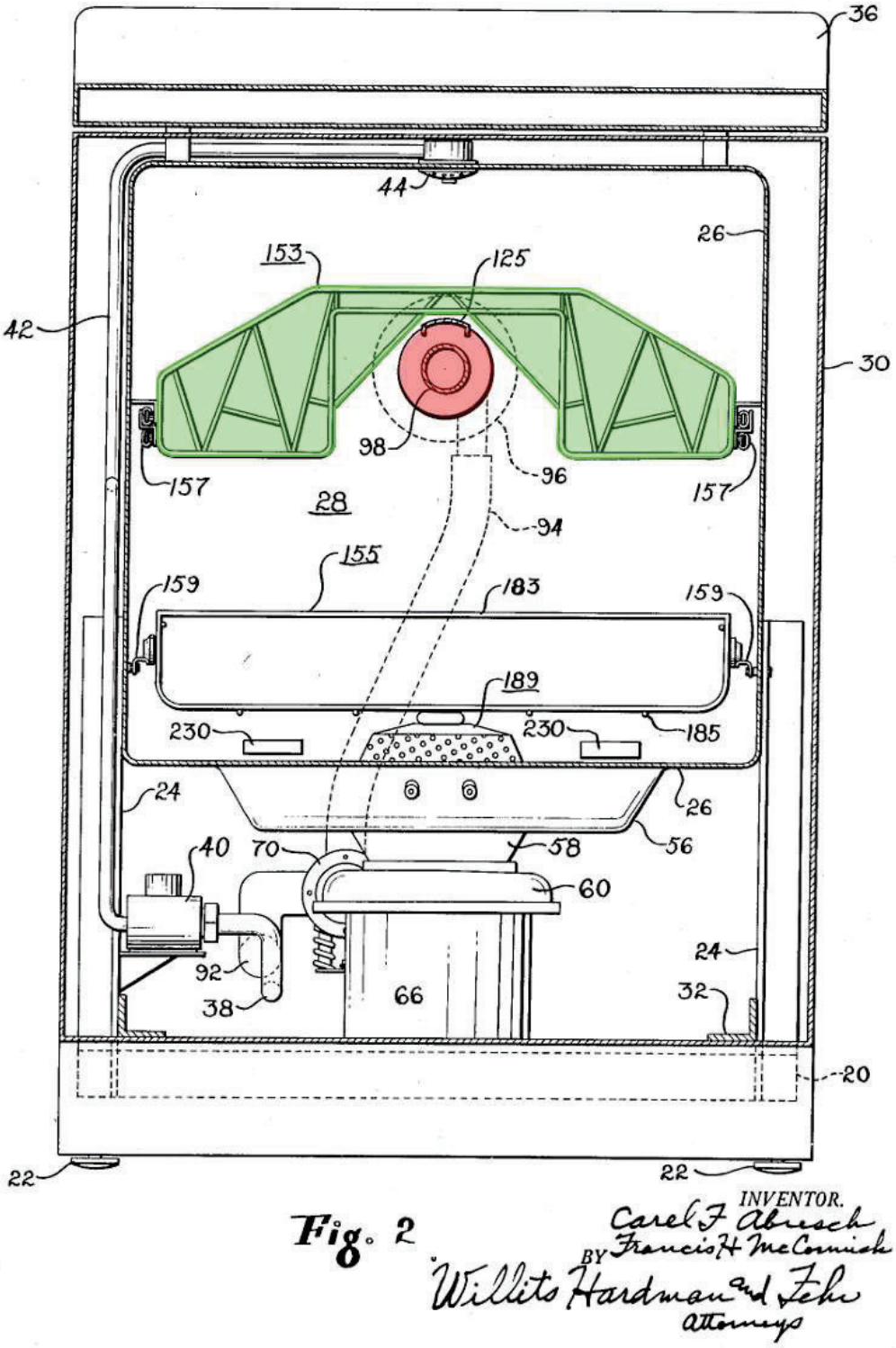

Fig. 2

176. The disposition of the spray tube in Abresch is readily applied to Andrew. Andrew aims to "provide[] ample and proper support for washing, rinsing, and draining of tumblers, ***cups***, saucers, . . . and drinking glasses. Andrew, 4:19-22. Abresch confirms that it is still possible to

spray directly into the sets of cups placed on the cup seats of the upper rack with the spray tube disposed above the lowermost points of said cup seats. As applied to Andrew, the spray tube would thus be raised in relation to the upper rack and the first and second set of cup seats. This is depicted, below, in modified Figure 5' where the lower most point of the first set of cup seats (blue) and second set of cup seats (yellow) is disposed below the liquid spray tube (red).

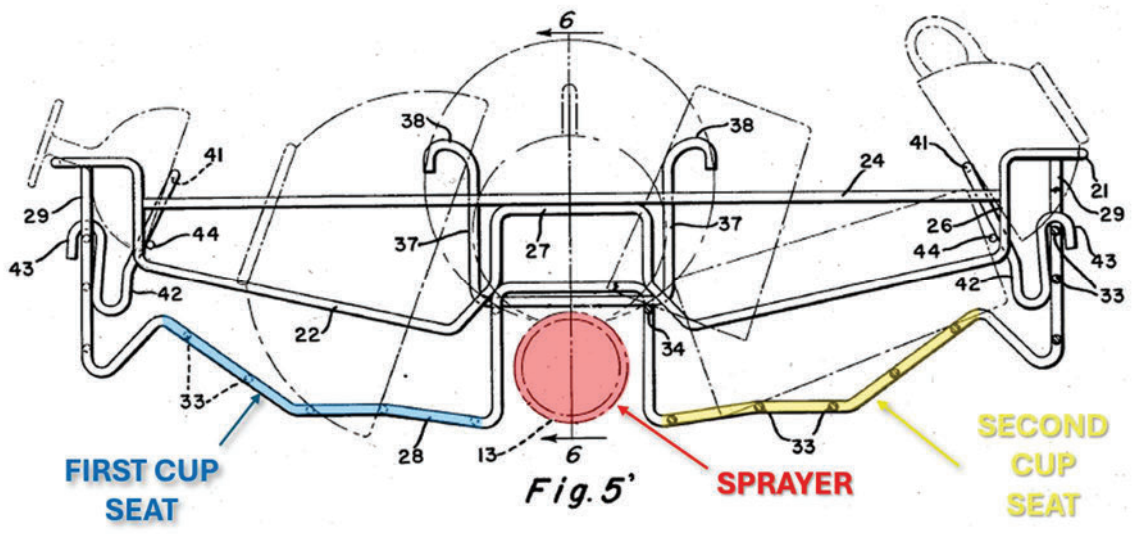

Fig. 5'

IX. CONCLUSION

177. For the reasons stated above, it is my opinion that all of the '922 Asserted Claims are (1) not infringed by the Accused Product and (2) invalid as being either anticipated or rendered obvious in view of prior art.

178. I declare that all statements made in this Declaration of my knowledge are true, and that all statements made on information and belief are believed to be true, and that these statements were made with the knowledge that willful false statements and the like so made are punishable by fine or imprisonment, or both, under Section 1001 of Title 18 of the United States Code.

DATED: March 3, 2026

Kimberly Cameron
Dr. Kimberly K. Cameron