US007046230B2

(12) **United States Patent**
Zadesky et al.

(10) **Patent No.: US 7,046,230 B2**
(45) **Date of Patent: May 16, 2006**

(54) **TOUCH PAD HANDHELD DEVICE**

(75) Inventors: **Stephen Paul Zadesky**, San Carlos, CA (US); **Tang Yew Tan**, San Francisco, CA (US)

(73) Assignee: **Apple Computer, Inc.**, Cupertino, CA (US)

(*) Notice: Subject to any disclaimer, the term of this patent is extended or adjusted under 35 U.S.C. 154(b) by 117 days.

(21) Appl. No.: **10/188,182**

(22) Filed: **Jul. 1, 2002**

(65) **Prior Publication Data**

US 2003/0076306 A1 Apr. 24, 2003

Related U.S. Application Data

(60) Provisional application No. 60/359,551, filed on Feb. 25, 2002, provisional application No. 60/346,237, filed on Oct. 22, 2001.

(51) **Int. Cl.**
G09G 5/00 (2006.01)

(52) **U.S. Cl.** **345/156**; 345/173

(58) **Field of Classification Search** ..... 345/156, 345/169, 173–179, 863, 864, 84; 178/18.01–18.11; 200/5 R, 52 R; 715/727, 864
See application file for complete search history.

(56) **References Cited**

U.S. PATENT DOCUMENTS

4,110,749	A	8/1978	Janko et al.	
4,264,903	A	4/1981	Bigelow	
4,719,524	A *	1/1988	Morishima et al.	360/73.05
4,736,191	A *	4/1988	Matzke et al.	341/20
4,866,602	A	9/1989	Hall	
4,917,516	A	4/1990	Retter	
5,125,077	A	6/1992	Hall	
5,179,648	A	1/1993	Hauck	
5,186,646	A	2/1993	Pederson	
5,237,311	A	8/1993	Mailey et al.	
D349,280	S	8/1994	Kaneko	
5,339,213	A	8/1994	O'Callaghan	
5,404,152	A	4/1995	Nagai	
5,414,445	A	5/1995	Kaneko et al.	
5,438,331	A	8/1995	Gilligan et al.	
D362,431	S	9/1995	Kaneko et al.	
5,473,343	A	12/1995	Kimmich et al.	
5,473,344	A	12/1995	Bacon et al.	
5,495,566	A	2/1996	Kwatinetz	
5,559,943	A	9/1996	Cyr et al.	
5,561,445	A	10/1996	Miwa et al.	
5,565,887	A	10/1996	McCambridge et al.	
5,578,817	A	11/1996	Bidiville et al.	
5,585,823	A	12/1996	Duchon et al.	
5,596,347	A	1/1997	Robertson et al.	
5,598,183	A	1/1997	Robertson et al.	
5,611,040	A	3/1997	Brewer et al.	
5,611,060	A	3/1997	Belfiore et al.	
D382,550	S	8/1997	Kaneko et al.	

(Continued)

FOREIGN PATENT DOCUMENTS

DE 19722636 12/1998

(Continued)

OTHER PUBLICATIONS

Tessler et al. "Touchpads Three new input devices", website www.macworld.com/1996/02/review/1806.html, download Feb. 13, 2002.

(Continued)

Primary Examiner—Alexander Eisen
(74) *Attorney, Agent, or Firm*—Beyer Weaver & Thomas,LLP

(57) **ABSTRACT**

A media player having a touch pad is disclosed.

28 Claims, 7 Drawing Sheets

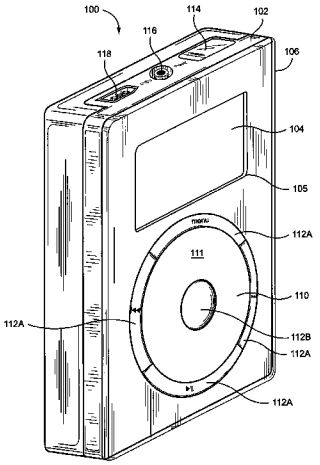

U.S. PATENT DOCUMENTS

D385,542	S	10/1997	Kaneko et al.	
5,726,687	A	3/1998	Belfiore et al.	
5,729,219	A *	3/1998	Armstrong et al.	341/20
5,730,165	A	3/1998	Philipp	
5,748,185	A	5/1998	Stephan et al.	
5,751,274	A	5/1998	Davis	
5,754,890	A	5/1998	Holmdahl et al.	
5,786,818	A	7/1998	Brewer et al.	
5,808,602	A	9/1998	Sellers	
5,825,353	A	10/1998	Will	
5,828,364	A	10/1998	Siddiqui	
5,838,304	A	11/1998	Hall	
D402,281	S	12/1998	Ledbetter et al.	
5,850,213	A	12/1998	Imai et al.	
5,856,822	A	1/1999	Du et al.	
5,883,619	A	3/1999	Ho et al.	
5,889,236	A	3/1999	Gillespie et al.	
5,903,229	A	5/1999	Kishi	
5,907,152	A	5/1999	Dandliker et al.	
5,907,318	A	5/1999	Medina	
5,909,211	A	6/1999	Combs et al.	
5,914,706	A *	6/1999	Kono	345/173
5,956,019	A	9/1999	Bang et al.	
5,959,611	A	9/1999	Smailagic et al.	
6,002,389	A	12/1999	Kasser et al.	
6,005,299	A	12/1999	Hengst	
6,031,518	A	2/2000	Adams et al.	
6,075,533	A	6/2000	Chang	
6,084,574	A	7/2000	Bidiville	
6,097,372	A	8/2000	Suzuki	
6,124,587	A	9/2000	Bidiville	
6,128,006	A	10/2000	Rosenberg et al.	
6,163,312	A	12/2000	Furuya	
6,166,721	A	12/2000	Kuroiwa et al.	
6,179,496	B1	1/2001	Chou	
6,181,322	B1	1/2001	Nanavati	
6,188,393	B1	2/2001	Shu	
6,191,774	B1	2/2001	Schena et al.	
6,198,473	B1	3/2001	Armstrong	
6,211,861	B1	4/2001	Rosenberg et al.	
6,219,038	B1	4/2001	Cho	
D442,592	S	5/2001	Ledbetter et al.	
6,225,976	B1	5/2001	Yates et al.	
6,225,980	B1	5/2001	Weiss et al.	
D443,616	S	6/2001	Fisher et al.	
6,243,078	B1	6/2001	Rosenberg	
6,256,011	B1	7/2001	Culver	
6,262,717	B1	7/2001	Donohue et al.	
6,266,050	B1	7/2001	Oh et al.	
6,297,795	B1	10/2001	Kato et al.	
6,323,845	B1	11/2001	Robbins	
6,340,800	B1 *	1/2002	Zhai et al.	200/5 R
D454,568	S	3/2002	Andre et al.	
6,373,470	B1	4/2002	Andre et al.	
6,377,530	B1	4/2002	Burrows	
6,429,852	B1	8/2002	Adams et al.	
6,587,091	B1	7/2003	Serpa	
6,636,197	B1	10/2003	Goldenberg et al.	
6,639,584	B1 *	10/2003	Li	345/173
6,650,975	B1	11/2003	Ruffner	
6,677,927	B1	1/2004	Bruck et al.	
6,686,904	B1	2/2004	Sherman et al.	
6,703,550	B1	3/2004	Chu	
6,724,817	B1	4/2004	Simpson et al.	
6,738,045	B1	5/2004	Hinckley et al.	
6,791,533	B1	9/2004	Su	
6,795,057	B1	9/2004	Gordon	
6,844,872	B1	1/2005	Farag et al.	
2001/0011991	A1	8/2001	Wang et al.	
2001/0043545	A1	11/2001	Aratani	
2001/0050673	A1	12/2001	Davenport	
2001/0051046	A1	12/2001	Watanable et al.	
2002/0030665	A1	3/2002	Ano	
2002/0033848	A1	3/2002	Schiammarella et al.	
2002/0089545	A1	7/2002	Montalcini	
2002/0118169	A1	8/2002	Hinckley et al.	
2002/0154090	A1	10/2002	Lin	
2002/0158844	A1	10/2002	McLoone et al.	
2002/0164156	A1	11/2002	Bilbrey	
2002/0180701	A1	12/2002	Hayama et al.	
2003/0043121	A1	3/2003	Chen	
2003/0050092	A1 *	3/2003	Yun	455/556
2003/0076301	A1	4/2003	Tsuk et al.	
2003/0076303	A1	4/2003	Huppi	
2003/0095096	A1	5/2003	Robbin et al.	
2003/0098851	A1	5/2003	Brink	
2004/0239622	A1 *	12/2004	Proctor et al.	345/156
2004/0252109	A1	12/2004	Trent, Jr. et al.	

FOREIGN PATENT DOCUMENTS

DE	10022537	11/2000
EP	0 498 540 A2	1/1992
EP	0 880 091 A2	11/1998
EP	1026 713 A1	8/2000
JP	63-106826	5/1988
JP	07-319001	12/1995
JP	10-326149	12/1998
JP	11-194863	7/1999
JP	11-194872	7/1999
JP	11-194883	7/1999
JP	2000-215549	8/2000
WO	WO94/17494	8/1994
WO	WO 98/14863	4/1998
WO	WO99/49443	9/1999

OTHER PUBLICATIONS

"OEM Touchpad Modules" website www.glideppoint.com/sales/modules.index.shtml, downloaded Feb. 13, 2002.

"System Service and Troubleshooting Manual", www.dsplib.com/intv/Master, downloaded Dec. 11, 2002.

"About Quicktip® " www.logicad3d.com/docs/qt.html, downloaded Apr. 8, 2002.

"Neuros MP3 Digital Audio Computer", www.neurosaudio.com., downloaded Apr. 9, 2003.

"Product Overview—ErgoCommander® ", www.logicad3d.com/products/ErgoCommander.htm, downloaded Apr. 8, 2002.

"Product Overview—SpaceMouse® Classic", www.logicad3d.com/products/Classic.htm, downloaded Apr. 8, 2002.

"Synaptics Touch Pad Interfacing Guide" Second Edition, Mar. 25, 1998, Synaptics, Inc. San Jose, CA, pp. 1-90.

Chapweske, Adam, "PS/2 Mouse/Keyboard Protocol", 1999, http://panda.cs.ndsu.nodak.edu/~achapwes/PICmicro/PS2/ps2.htm.

Fiore, Andrew, "Zen Touchpad", Cornell University, May 2000.

Gadgetboy, "Point and click with the latest mice", CNET Asia Product Review, www.asia.cnet.com/reviews . . . are/gadgetboy/0,39001170,38023590,00.htm, downloaded Dec. 5, 2001.

"Der Klangmeister," Connect Magazine, Aug. 1998.

Photographs of Innvocations 2000 Best of Show award presented at the 2000 International CES Innovations 2000 Design & Engineering Showcase, 1 pg.

BeoCom 6000, Sales Training Brochure, date unknown.

Letter re: Bang & Olufsen A/S, by David Safran, Nixon Peabody, LLP, May 21, 2004.

Marriott et al., U.S. Appl. No. 10/722,948, filed Nov. 25, 2003.
Bang & Olufsen Telecom a/s, BeoCom 6000 User Guide 2000.
Sylvania, "Intellivision™ Intelligent Television Master Component Service Manual," pp. 1, 2 and 8, 1979.
U.S. Appl. No. 10/060,712 filed Jan. 29, 2002.
U.S. Appl. No. 10/209,537 filed Jul. 30, 2002.
"Apple Unveils Optical Mouse and New Pro Keyboard," Press Release, Jul. 19, 2000.

* cited by examiner

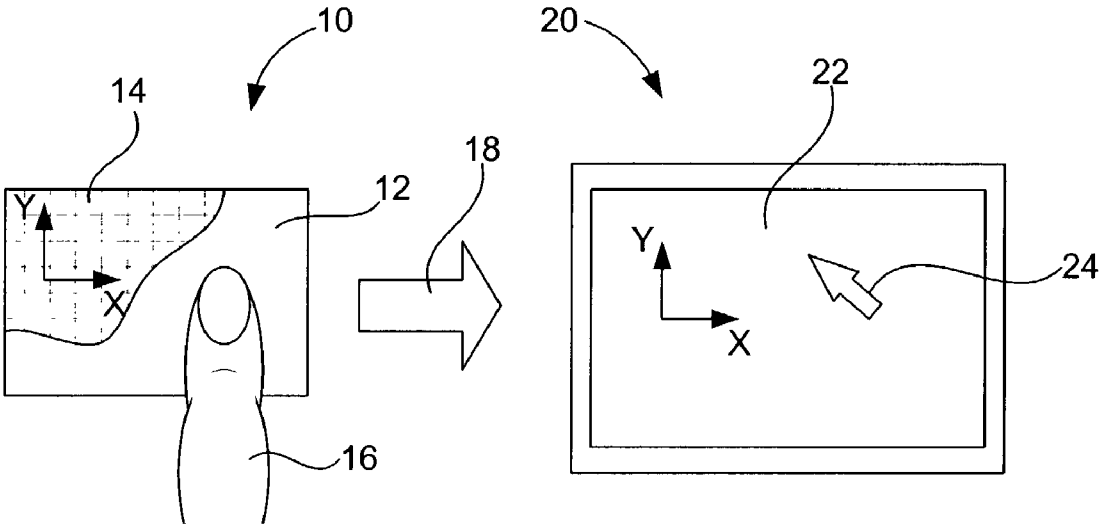

FIG. 1

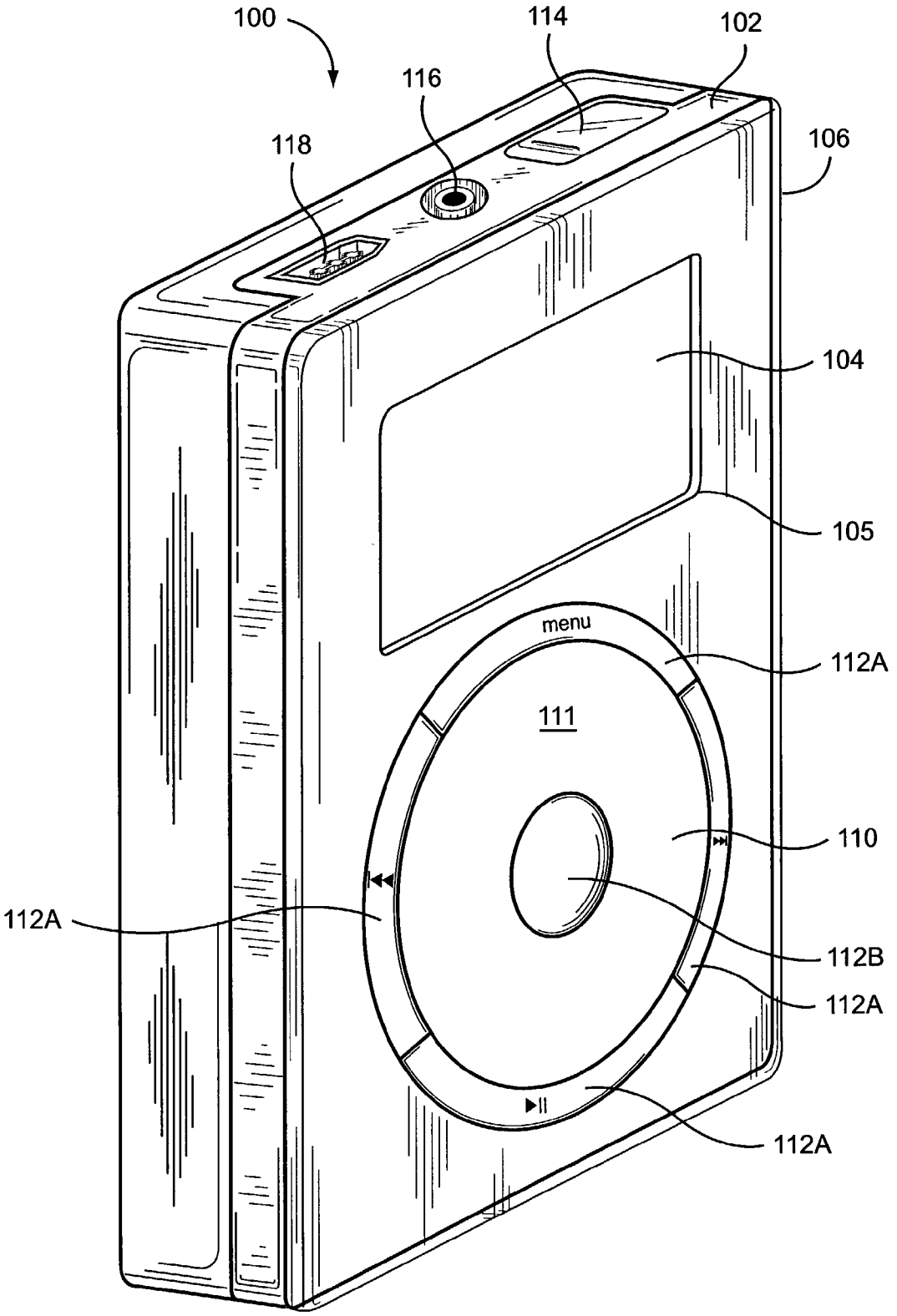
100
114
102
116
118
106
104
105
menu
112A
111
110
112A
112B
112A
112A

FIG. 2

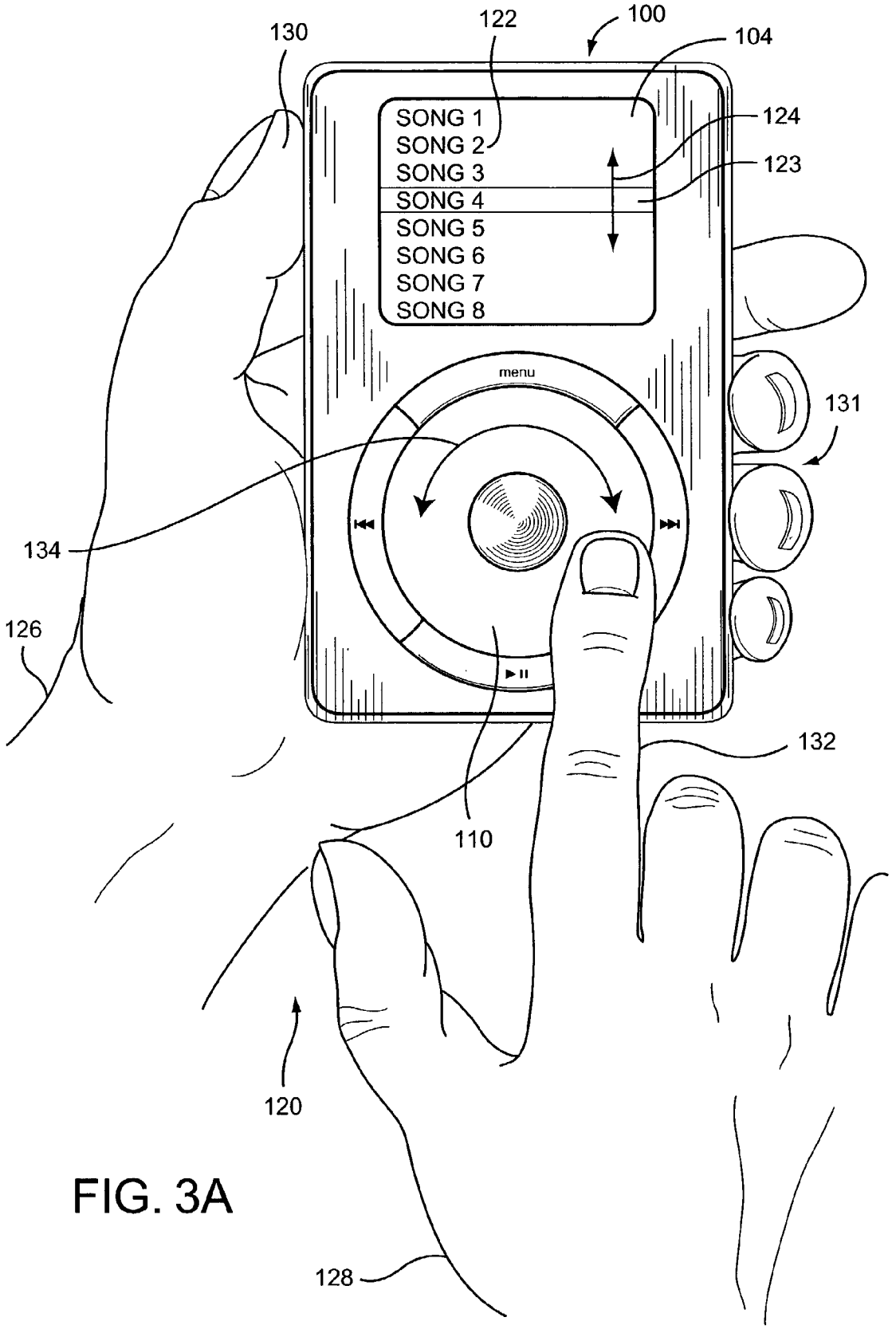
100
104
122
130
124
123
SONG 1
SONG 2
SONG 3
SONG 4
SONG 5
SONG 6
SONG 7
SONG 8
menu
131
134
126
132
110
120
128

FIG. 3A

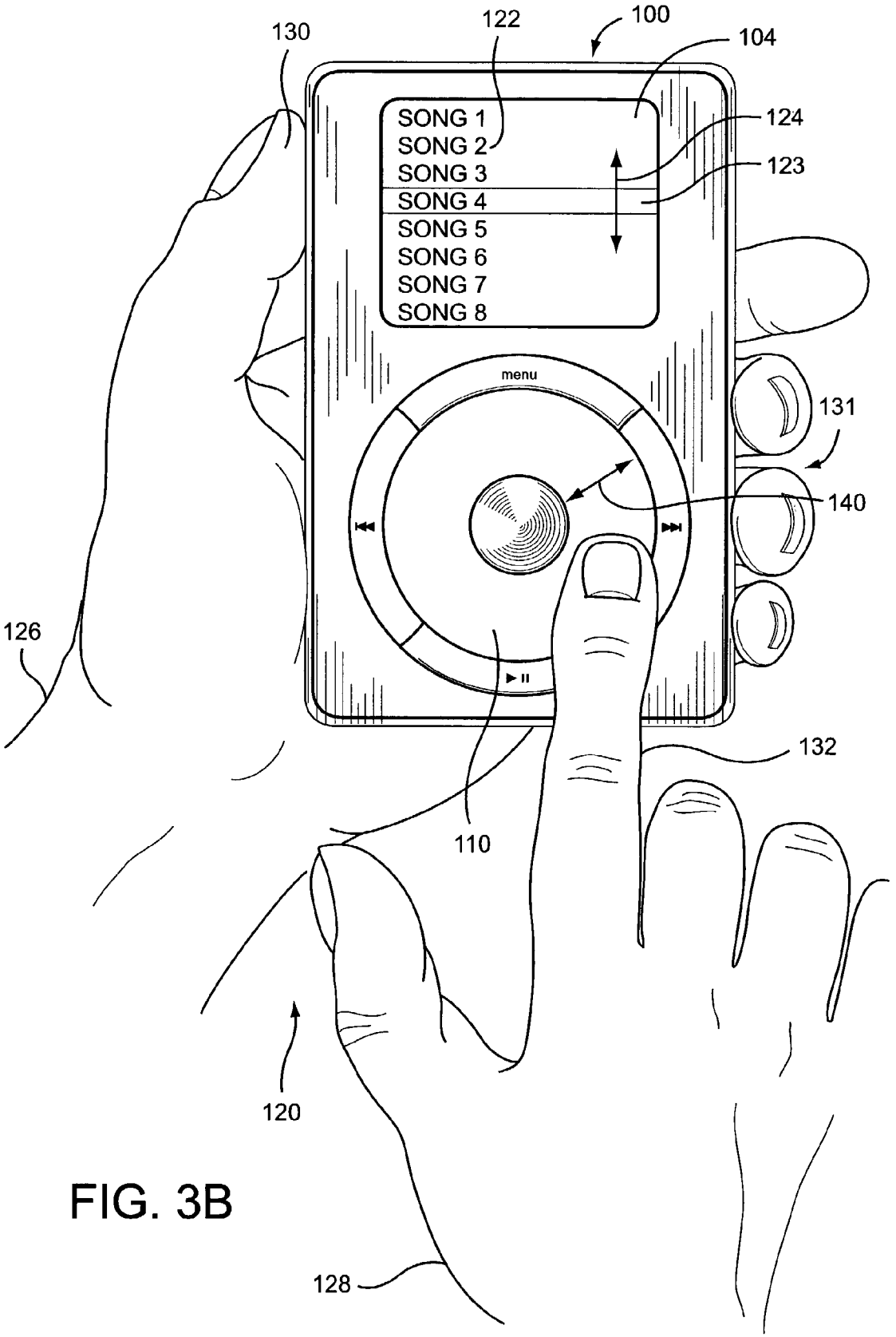
100
104
122
130
124
123
SONG 1
SONG 2
SONG 3
SONG 4
SONG 5
SONG 6
SONG 7
SONG 8
menu
131
140
126
132
110
120
128

FIG. 3B

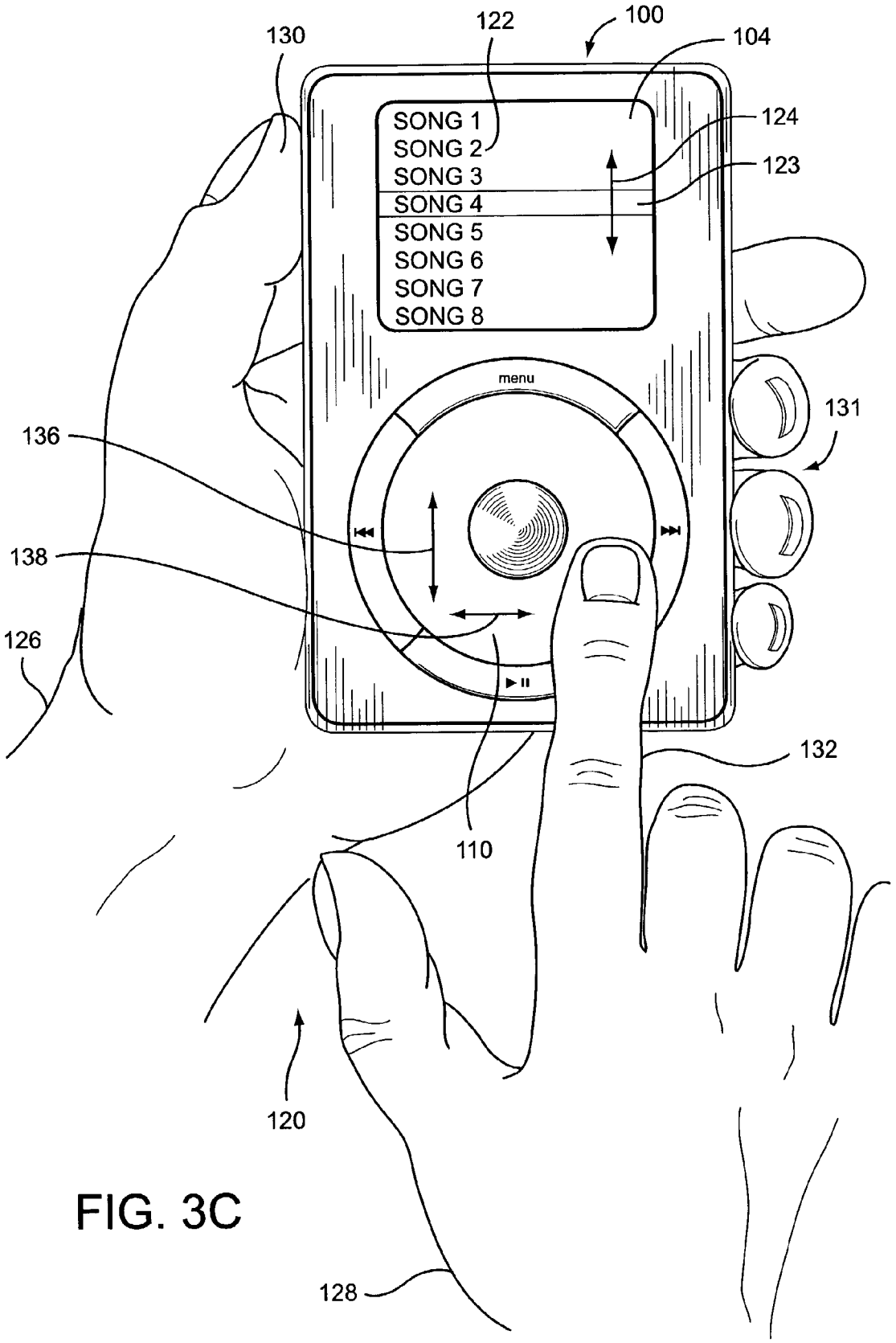
100
104
122
130
124
123
SONG 1
SONG 2
SONG 3
SONG 4
SONG 5
SONG 6
SONG 7
SONG 8
menu
131
136
138
126
132
110
120
128

FIG. 3C

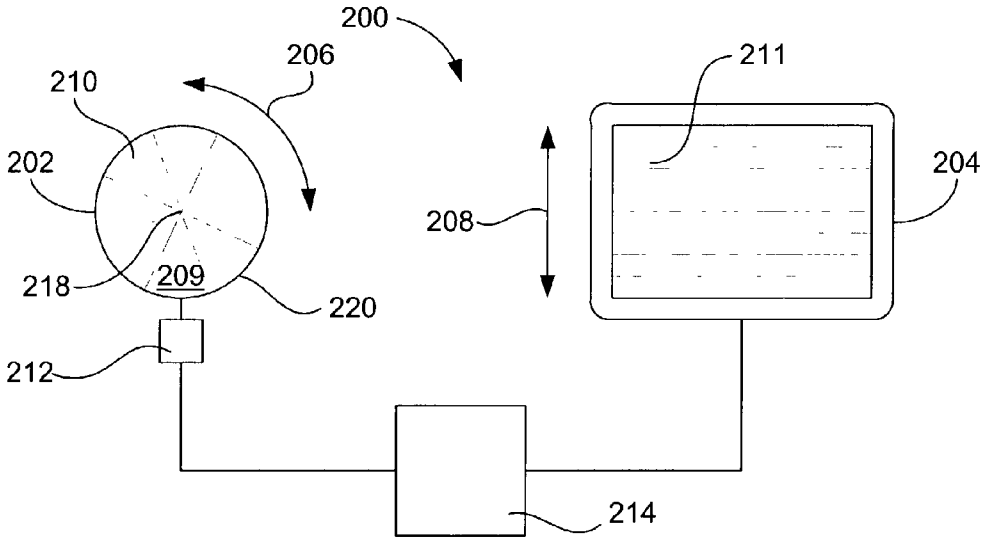

FIG. 4

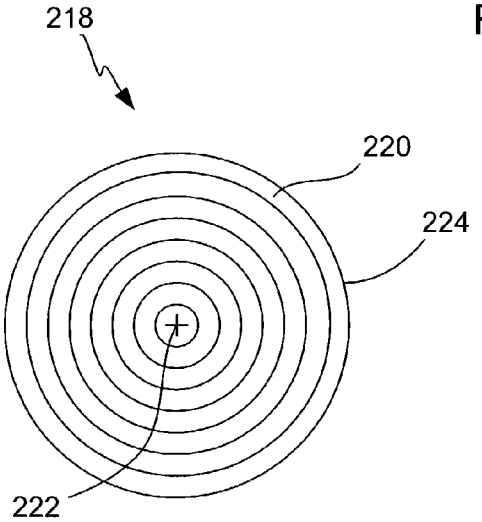

FIG. 5

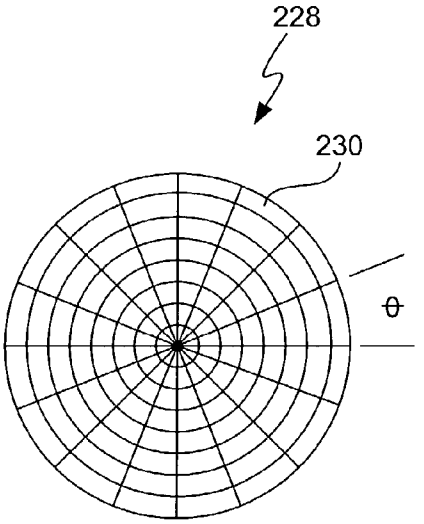

FIG. 6

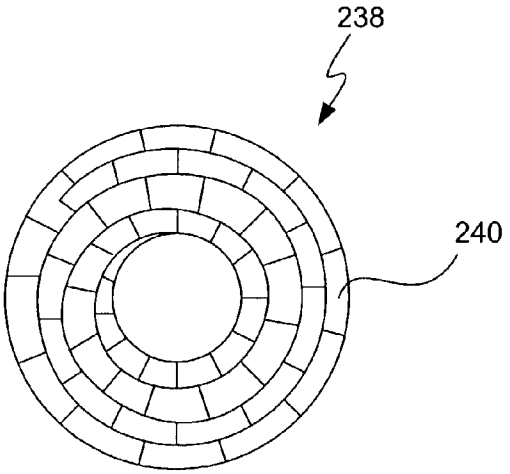

FIG. 7

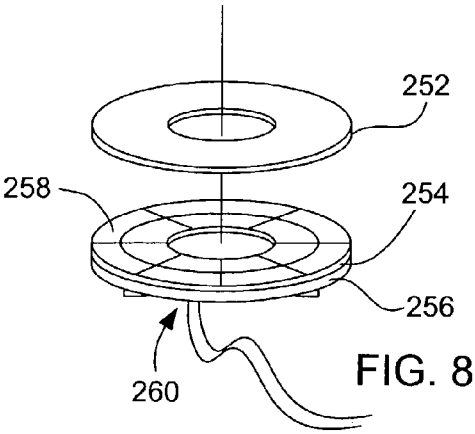

FIG. 8

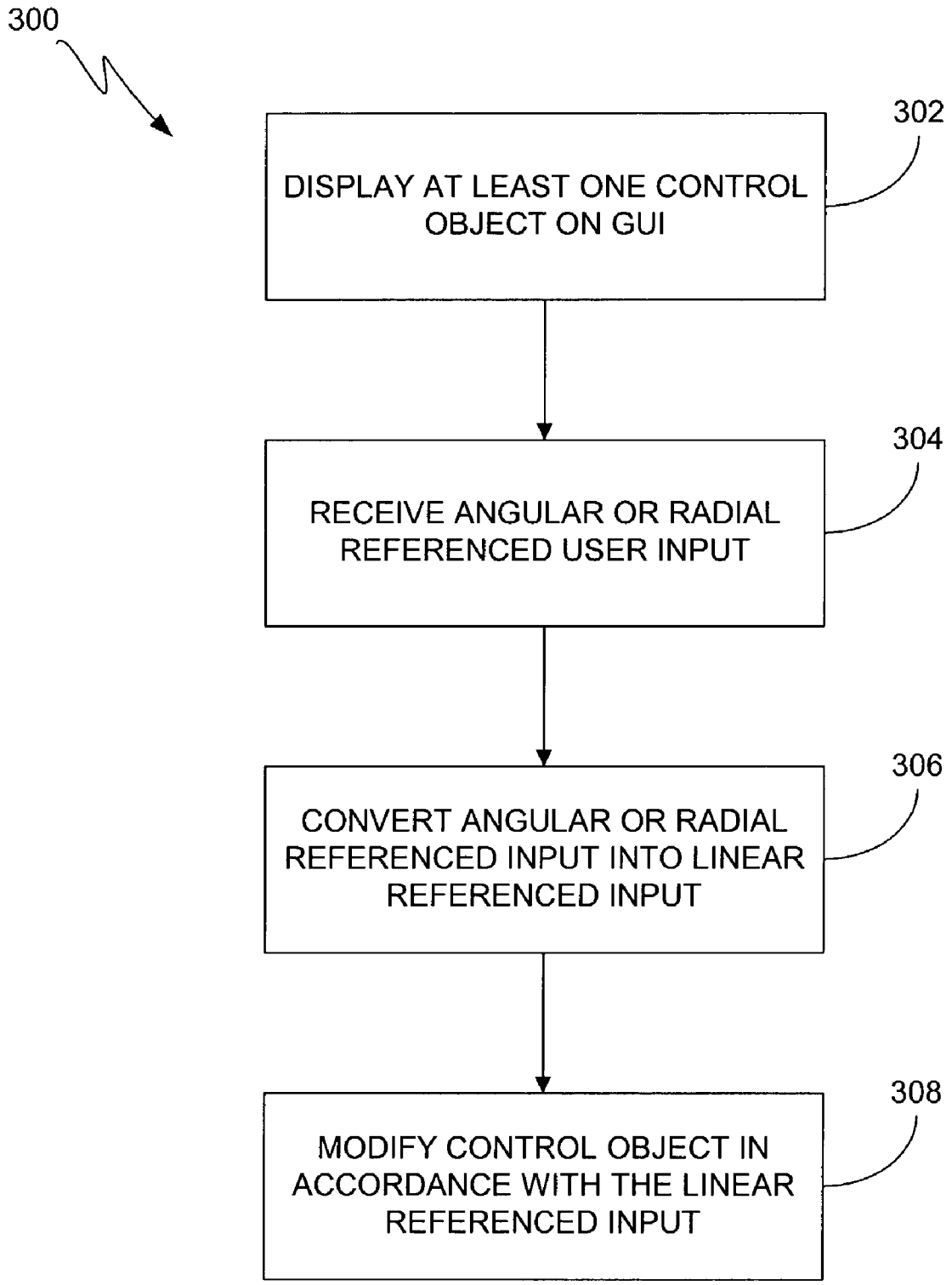
300
302
DISPLAY AT LEAST ONE CONTROL OBJECT ON GUI
304
RECEIVE ANGULAR OR RADIAL REFERENCED USER INPUT
306
CONVERT ANGULAR OR RADIAL REFERENCED INPUT INTO LINEAR REFERENCED INPUT
308
MODIFY CONTROL OBJECT IN ACCORDANCE WITH THE LINEAR REFERENCED INPUT

FIG. 9

TOUCH PAD HANDHELD DEVICE

CROSS REFERENCE TO RELATED APPLICATION

This application claims the priority of U.S. Patent Application No. 60/359,551, entitled "Touch Pad for Handheld Device," filed on Feb. 25, 2002, and which is incorporated herein by reference.

This application is related to U.S. Patent Application No. 60/346,237, entitled "Method and System for List Scrolling," filed on Oct. 22, 2001, and which is incorporated herein by reference.

This application is also related to U.S. Design patent application Ser. No. 29/153,169, entitled "MEDIA PLAYER," filed on Oct. 22, 2001, and which is incorporated herein by reference.

BACKGROUND OF THE INVENTION

1. Field of the Invention

The present invention relates generally to a media player having a touch pad. More particularly, the present invention relates to touch pads having scrolling features.

2. Description of the Related Art

There exist today many styles of input devices for performing operations in a consumer electronic device. The operations generally correspond to moving a cursor and making selections on a display screen. By way of example, the input devices may include buttons, switches, keyboards, mice, trackballs, touch pads, joy sticks, touch screens and the like. Each of these devices has advantages and disadvantages that are taken into account when designing the consumer electronic device. In handheld computing devices, the input devices are generally selected from buttons and switches. Buttons and switches are generally mechanical in nature and provide limited control with regards to the movement of a cursor (or other selector) and making selections. For example, they are generally dedicated to moving the cursor in a specific direction (e.g., arrow keys) or to making specific selections (e.g., enter, delete, number, etc.). In the case of hand-held personal digital assistants (PDA), the input devices tend to utilize touch-sensitive display screens. When using a touch screen, a user makes a selection on the display screen by pointing directly to objects on the screen using a stylus or finger.

In portable computing devices such as laptop computers, the input devices are commonly touch pads. With a touch pad, the movement of an input pointer (i.e., cursor) corresponds to the relative movements of the user's finger (or stylus) as the finger is moved along a surface of the touch pad. Touch pads can also make a selection on the display screen when one or more taps are detected on the surface of the touch pad. In some cases, any portion of the touch pad may be tapped, and in other cases a dedicated portion of the touch pad may be tapped. In stationary devices such as desktop computers, the input devices are generally selected from mice and trackballs. With a mouse, the movement of the input pointer corresponds to the relative movements of the mouse as the user moves the mouse along a surface. With a trackball, the movement of the input pointer corresponds to the relative movements of a ball as the user rotates the ball within a housing. Both mice and trackballs generally include one or more buttons for making selections on the display screen.

In addition to allowing input pointer movements and selections with respect to a GUI presented on a display

screen, the input devices may also allow a user to scroll across the display screen in the horizontal or vertical directions. For example, mice may include a scroll wheel that allows a user to simply roll the scroll wheel forward or backward to perform a scroll action. In addition, touch pads may provide dedicated active areas that implement scrolling when the user passes his or her finger linearly across the active area in the x and y directions. Both devices may also implement scrolling via horizontal and vertical scroll bars as part of the GUI. Using this technique, scrolling is implemented by positioning the input pointer over the desired scroll bar, selecting the desired scroll bar, and moving the scroll bar by moving the mouse or finger in the y direction (forwards and backwards) for vertical scrolling or in the x direction (left and right) for horizontal scrolling.

With regards to touch pads, mice and track balls, a Cartesian coordinate system is used to monitor the position of the finger, mouse and ball, respectively, as they are moved. The Cartesian coordinate system is generally defined as a two dimensional coordinate system (x, y) in which the coordinates of a point (e.g., position of finger, mouse or ball) are its distances from two intersecting, often perpendicular straight lines, the distance from each being measured along a straight line parallel to each other. For example, the x, y positions of the mouse, ball and finger may be monitored. The x, y positions are then used to correspondingly locate and move the input pointer on the display screen.

To elaborate further, touch pads generally include one or more sensors for detecting the proximity of the finger thereto. By way of example, the sensors may be based on resistive sensing, surface acoustic wave sensing, pressure sensing (e.g., strain gauge), optical sensing, capacitive sensing and the like. The sensors are generally dispersed about the touch pad with each sensor representing an x, y position. In most cases, the sensors are arranged in a grid of columns and rows. Distinct x and y position signals, which control the x, y movement of a pointer device on the display screen, are thus generated when a finger is moved across the grid of sensors within the touch pad. For brevity sake, the remaining discussion will be held to the discussion of capacitive sensing technologies. It should be noted, however, that the other technologies have similar features.

Capacitive sensing touch pads generally contain several layers of material. For example, the touch pad may include a protective shield, one or more electrode layers and a circuit board. The protective shield typically covers the electrode layer(s), and the electrode layer(s) is generally disposed on a front side of the circuit board. As is generally well known, the protective shield is the part of the touch pad that is touched by the user to implement cursor movements on a display screen. The electrode layer(s), on the other hand, is used to interpret the x, y position of the user's finger when the user's finger is resting or moving on the protective shield. The electrode layer (s) typically consists of a plurality of electrodes that are positioned in columns and rows so as to form a grid array. The columns and rows are generally based on the Cartesian coordinate system and thus the rows and columns correspond to the x and y directions.

The touch pad may also include sensing electronics for detecting signals associated with the electrodes. For example, the sensing electronics may be adapted to detect the change in capacitance at each of the electrodes as the finger passes over the grid. The sensing electronics are generally located on the backside of the circuit board. By way of example, the sensing electronics may include an application specific integrated circuit (ASIC) that is config-

ured to measure the amount of capacitance in each of the electrodes and to compute the position of finger movement based on the capacitance in each of the electrodes. The ASIC may also be configured to report this information to the computing device.

Referring to FIG. **1**, a touch pad **10** will be described in greater detail. The touch pad is generally a small rectangular area that includes a protective shield **12** and a plurality of electrodes **14** disposed underneath the protective shield layer **12**. For case of discussion, a portion of the protective shield layer **12** has been removed to show the electrodes **14**. Each of the electrodes **14** represents a different x, y position. In one configuration, as a finger **16** approaches the electrode grid **14**, a tiny capacitance forms between the finger **16** and the electrodes **14** proximate the finger **16**. The circuit board/sensing electronics measures capacitance and produces an x, y input signal **18** corresponding to the active electrodes **14** is sent to a host device **20** having a display screen **22**. The x, y input signal **18** is used to control the movement of a cursor **24** on a display screen **22**. As shown, the input pointer moves in a similar x, y direction as the detected x, y finger motion.

SUMMARY OF THE INVENTION

In view of the foregoing, it would be desirable to provide a media player with a touch pad. It would also be desirable to provide a hand held device with a touch pad. It would additionally be desirable to provide a touch pad that can sense and resolve angular and/or radial positions of a moving object (e.g., finger) as it is moved in a rotating and/or radial manner across the touch pad. That is, a touch pad that is based on polar coordinates rather than Cartesian coordinates. It would be further desirable to transform the angular or radial movements into translational movements in the GUI of the display screen for scrolling and other related linear actions.

The invention relates, in one embodiment, to a media player for storing and playing media such as audio, video or images. The media player includes a housing that encloses internally various electrical components that provide computing operations for the media player. The media player also includes a touch pad supported by the housing and configured to provide one or more control functions for controlling various applications associated with the media player.

The invention relates, in another embodiment, to a pocket sized handheld computing device. The computing device includes computing hardware for providing at least one application. The computing device also includes a display screen configured to display text and graphics associated with the at least one application. The computing device additionally includes a touch pad configured to provide one or more control functions for allowing a user of the computing device to provide inputs to the at least one application.

The invention relates, in another embodiment, to a touch pad assembly for use in a computing device. The touch pad assembly has a touch sensitive surface for accepting contact with an object. The touch pad assembly is configured to provide polar coordinate information of the object relative to the touch sensitive surface when the object is moved about the touch sensitive surface.

The invention relates, in another embodiment, to a user input system having a touch pad, a display and a controller. The system is configured to convert angular or radial data associated with the touch pad into control inputs associated with the display. By way of example, the control inputs may correspond to translational movements associated with scrolling or other related linear actions.

BRIEF DESCRIPTION OF THE DRAWINGS

The present invention is illustrated by way of example, and not by way of limitation, in the figures of the accompanying drawings and in which like reference numerals refer to similar elements and in which:

FIG. **1** is a simplified diagram of a touch pad and display.

FIG. **2** is a perspective view of a media player, in accordance with one embodiment of the present invention.

FIG. **3** is top view of a media player in use, in accordance with one embodiment of the present invention.

FIG. **4** is a simplified block diagram of a touchpad/display system, in accordance with one embodiment of the present invention.

FIG. **5** is a top view of a sensor arrangement of a touch pad, in accordance with another embodiment of the present invention.

FIG. **6** is a top view of a sensor arrangement of a touch pad, in accordance with another embodiment of the present invention.

FIG. **7** is a top view of a sensor arrangement of a touch pad, in accordance with another embodiment of the present invention.

FIG. **8** is a partially broken away perspective view of an annular capacitive touch pad, in accordance with one embodiment of the present invention.

FIG. **9** is a flow diagram of touch pad-display processing, in accordance with one embodiment of the invention.

DETAILED DESCRIPTION OF THE INVENTION

The present invention relates to touch pads. According to one aspect of the invention, a touch pad is provided on a media player to facilitate user interaction therewith. In one embodiment, the media player is a handheld device. According to another aspect of the invention, a touch pad is provided that can sense and resolve angular and/or radial positions of a moving object (e.g., finger) as it is moved in a largely rotational and/or radial manner across the touch pad. In one embodiment, the touch pad that is based on polar coordinates rather than Cartesian coordinates. Other aspects of the invention will become apparent below. In any case, the aspects are not limiting and the various aspects of the invention can be used separately or in combination.

The present invention will now be described in detail with reference to a few preferred embodiments thereof as illustrated in the accompanying drawings. In the following description, numerous specific details are set forth in order to provide a thorough understanding of the present invention. It will be apparent, however, to one skilled in the art, that the present invention may be practiced without some or all of these specific details. In other instances, well known process steps have not been described in detail in order not to unnecessarily obscure the present invention.

FIG. **2** is a perspective diagram of a media player **100**, in accordance with one embodiment of the present invention. The term "media player" generally refers to computing devices that are dedicated to processing media such as audio, video or other images, as for example, music players, game players, video players, video recorders, cameras and the like. These devices are generally portable so as to allow a user to listen to music, play games or video, record video or take

pictures wherever the user travels. In one embodiment, the media player is a handheld device that is sized for placement into a pocket of the user. By being pocket sized, the user does not have to directly carry the device and therefore the device can be taken almost anywhere the user travels (e.g., the user is not limited by carrying a large, bulky and often heavy device, as in a portable computer). For example, in the case of a music player, a user may use the device while working out at the gym. In case of a camera, a user may use the device while mountain climbing. Furthermore, the device may be operated by the users hands, no reference surface such as a desktop is needed (this is shown in greater detail in FIG. **3**).

Media players generally have connection capabilities that allow a user to upload and download data to and from a host device such as a general purpose computer (e.g., desktop computer, portable computer). For example, in the case of a camera, photo images may be downloaded to the general purpose computer for further processing (e.g., printing). With regards to music players, songs and play lists stored on the general purpose computer may be downloaded into the music player. In the illustrated embodiment, the media player **100** is a pocket sized hand held MP3 music player that allows a user to store a large collection of music. By way of example, the MP3 music player may store up to 1,000 CD-quality songs.

As shown in FIG. **2**, the media player **100** includes a housing **102** that encloses internally various electrical components (including integrated circuit chips and other circuitry) to provide computing operations for the media player **100**. The integrated circuit chips and other circuitry may include a microprocessor, memory (e.g., ROM, RAM), a power supply (e.g., battery), a circuit board, a hard drive, and various input/output (I/O) support circuitry. In the case of music players, the electrical components may include components for outputting music such as an amplifier and a digital signal processor (DSP). In the case of video recorders or cameras the electrical components may include components for capturing images such as image sensors (e.g., charge coupled device (CCD) or complimentary oxide semiconductor (CMOS)) or optics (e.g., lenses, splitters, filters). In addition to the above, the housing may also define the shape or form of the media player. That is, the contour of the housing **102** may embody the outward physical appearance of the media player **100**.

The media player **100** also includes a display screen **104**. The display screen **104** is used to display a graphical user interface as well as other information to the user (e.g., text, objects, graphics). By way of example, the display screen **104** may be a liquid crystal display (LCD). In one particular embodiment, the display screen corresponds to a 160-by-128-pixel high-resolution display, with a white LED backlight to give clear visibility in daylight as well as low-light conditions. As shown, the display screen **104** is visible to a user of the media player **100** through an opening **105** in the housing **102**, and through a transparent wall **106** that is disposed in front of the opening **105**. Although transparent, the transparent wall **106** may be considered part of the housing **102** since it helps to define the shape or form of the media player **100**.

The media player **100** also includes a touch pad **110**. The touch pad **110** is configured to provide one or more control functions for controlling various applications associated with the media player **100**. For example, the touch initiated control function may be used to move an object or perform an action on the display screen **104** or to make selections or issue commands associated with operating the media player **100**. In most cases, the touch pad **110** is arranged to receive input from a finger moving across the surface of the touch pad **110** in order to implement the touch initiated control function. The touch pad may be widely varied. For example, the touch pad be a conventional touch pad based on the Cartesian coordinate system, or the touch pad may be a touch pad based on a polar coordinate system (the later will be described in greater detail below).

The manner in which the touch pad **110** receives input may be widely varied. In one embodiment, the touch pad **110** is configured receive input from a linear finger motion. In another embodiment, the touch pad **110** is configured receive input from a rotary or swirling finger motion. In yet another embodiment, the touch pad **110** is configured receive input from a radial finger motion. Additionally or alternatively, the touch pad **110** may be arranged to receive input from a finger tapping on the touch pad **100**. By way of example, the tapping finger may initiate a control function for playing a song, opening a menu and the like.

In one embodiment, the control function corresponds to a scrolling feature. For example, in the case of an MP3 player, the moving finger may initiate a control function for scrolling through a song menu displayed on the display screen **104**. The term "scrolling" as used herein generally pertains to moving displayed data or images (e.g., text or graphics) across a viewing area on a display screen **104** so that a new set of data (e.g., line of text or graphics) is brought into view in the viewing area. In most cases, once the viewing area is full, each new set of data appears at the edge of the viewing area and all other sets of data move over one position. That is, the new set of data appears for each set of data that moves out of the viewing area. In essence, the scrolling function allows a user to view consecutive sets of data currently outside of the viewing area. The viewing area may be the entire viewing area of the display screen **104** or it may only be a portion of the display screen **104** (e.g., a window frame).

The direction of scrolling may be widely varied. For example, scrolling may be implemented vertically (up or down) or horizontally (left or right). In the case of vertical scrolling, when a user scrolls down, each new set of data appears at the bottom of the viewing area and all other sets of data move up one position. If the viewing area is full, the top set of data moves out of the viewing area. Similarly, when a user scrolls up, each new set of data appears at the top of the viewing area and all other sets of data move down one position. If the viewing area is full, the bottom set of data moves out of the viewing area. In one implementation, the scrolling feature may be used to move a Graphical User Interface (GUI) vertically (up and down), or horizontally (left and right) in order to bring more data into view on a display screen. By way of example, in the case of an MP3 player, the scrolling feature may be used to help browse through songs stored in the MP3 player. The direction that the finger moves may be arranged to control the direction of scrolling. For example, the touch pad may be arranged to move the GUI vertically up when the finger is moved in a first direction and vertically down when the finger is moved in a second direction

To elaborate, the display screen **104**, during operation, may display a list of media items (e.g., songs). A user of the media player **100** is able to linearly scroll through the list of media items by moving his or her finger across the touch pad **110**. As the finger moves around the touch pad **110**, the displayed items from the list of media items are varied such that the user is able to effectively scroll through the list of media items. However, since the list of media items can be

rather lengthy, the invention provides the ability for the user to rapidly traverse (or scroll) through the list of media items. In effect, the user is able to accelerate their traversal of the list of media items by moving his or her finger at greater speeds.

In one embodiment, the media player **100** via the touch pad **110** is configured to transform a swirling or whirling motion of a finger into translational or linear motion, as in scrolling, on the display screen **104**. In this embodiment, the touch pad **110** is configured to determine the angular location, direction, speed and acceleration of the finger when the finger is moved across the top planar surface of the touch pad **110** in a rotating manner, and to transform this information into signals that initiate linear scrolling on the display screen **104**. In another embodiment, the media player **100** via the touch pad **110** is configured to transform radial motion of a finger into translational or linear motion, as in scrolling, on the display screen **104**. In this embodiment, the touch pad **110** is configured to determine the radial location, direction, speed and acceleration of the finger when the finger is moved across the top planar surface of the touch pad **110** in a radial manner, and to transform this information into signals that initiate linear scrolling on the display screen **104**. In another embodiment, the media player **100** via the touch pad **202** is configured to transform both angular and radial motion of a finger into translational or linear motion, as in scrolling, on the display screen **104**.

The touch pad generally consists of a touchable outer surface **111** for receiving a finger for manipulation on the touch pad **110**. Although not shown in FIG. **2**, beneath the touchable outer surface **111** is a sensor arrangement. The sensor arrangement includes a plurality of sensors that are configured to activate as the finger passes over them. In the simplest case, an electrical signal is produced each time the finger passes a sensor. The number of signals in a given time frame may indicate location, direction, speed and acceleration of the finger on the touch pad, i.e., the more signals, the more the user moved his or her finger. In most cases, the signals are monitored by an electronic interface that converts the number, combination and frequency of the signals into location, direction, speed and acceleration information. This information may then be used by the media player **100** to perform the desired control function on the display screen **104**.

The position of the touch pad **110** relative to the housing **102** may be widely varied. For example, the touch pad **110** may be placed at any external surface (e.g., top, side, front, or back) of the housing **102** that is accessible to a user during manipulation of the media player **100**. In most cases, the touch sensitive surface **111** of the touch pad **110** is completely exposed to the user. In the illustrated embodiment, the touch pad **110** is located in a lower, front area of the housing **102**. Furthermore, the touch pad **110** may be recessed below, level with, or extend above the surface of the housing **102**. In the illustrated embodiment, the touch sensitive surface **111** of the touch pad **110** is substantially flush with the external surface of the housing **102**.

The shape of the touch pad **110** may also be widely varied. For example, the touch pad **110** may be circular, rectangular, triangular, and the like. In general, the outer perimeter of the shaped touch pad defines the working boundary of the touch pad. In the illustrated embodiment, the touch pad **110** is circular. Circular touch pads allow a user to continuously swirl a finger in a free manner, i.e., the finger can be rotated through 360 degrees of rotation without stopping. Furthermore, the user can rotate his or her finger tangentially from all sides thus giving it more range of finger positions. For example, when the media player is being held, a left handed user may choose to use one portion of the touch pad **110** while a right handed user may choose to use another portion of the touch pad **110**. More particularly, the touch pad is annular, i.e., shaped like or forming a ring. When annular, the inner and outer perimeter of the shaped touch pad defines the working boundary of the touch pad.

In addition to above, the media player **100** may also include one or more buttons **112**. The buttons **112** are configured to provide one or more dedicated control functions for making selections or issuing commands associated with operating the media player **100**. By way of example, in the case of an MP3 music player, the button functions may be associated with opening a menu, playing a song, fast forwarding a song, seeking through a menu and the like. In most cases, the button functions are implemented via a mechanical clicking action. The position of the buttons **112** relative to the touch pad **110** may be widely varied. For example, they may be adjacent one another or spaced apart. In the illustrated embodiment, the buttons **112** are configured to surround the inner and outer perimeter of the touch pad **110**. In this manner, the buttons **112** may provide tangible surfaces that define the outer boundaries of the touch pad **110**. As shown, there are four buttons **112**A that surround the outer perimeter and one button **112**B disposed in the center or middle of the touch pad **110**. By way of example, the plurality of buttons **112** may consist of a menu button, play/stop button, forward seek button and a reverse seek button, and the like.

Moreover, the media player **100** may also include a power switch **114**, a headphone jack **116** and a data port **118**. The power switch **114** is configured to turn the media device **100** on and off. The headphone jack **116** is capable of receiving a headphone connector associated with headphones configured for listening to sound being outputted by the media device **100**. The data port **118** is capable of receiving a data connector/cable assembly configured for transmitting and receiving data to and from a host device such as a general purpose computer. By way of example, the data port **118** may be used to upload or down load songs to and from the media device **100**. The data port **118** may be widely varied. For example, the data port may be a PS/2 port, a serial port, a parallel port, a USB port, a Firewire port and the like. In some cases, the data port **118** may be a radio frequency (RF) link or optical infrared (IR) link to eliminate the need for a cable. Although not shown in FIG. **2**, the media player **100** may also include a power port that receives a power connector/cable assembly configured for delivering powering to the media player **100**. In some cases, the data port **118** may serve as both a data and power port.

FIGS. **3**A-**3**C show the media player **100** of FIG. **2** being used by a user **120**, in accordance with different embodiments of the invention. In all of these embodiments, the user **120** is linearly scrolling **104** (as shown by arrow **124**) through a list of songs **122** displayed on the display screen via a slider bar **123**. As shown, the media device **100** is comfortably held by one hand **126** while being comfortably addressed by the other hand **128**. This configuration generally allows the user **120** to easily actuate the touch pad **110** with one or more fingers. For example, the thumb **130** and rightmost fingers **131** (or leftmost fingers if left handed) of the first hand **126** are used to grip the sides of the media player **100** while a finger **132** of the opposite hand **128** is used to actuate the touch pad **110**. As shown, the entire top surface of the touch pad **110** is accessible to the user's finger **130**.

Referring to FIG. **3**A, and in accordance with one embodiment of the invention, the touch pad **110** can be continuously actuated by a simple swirling motion of the finger **132** as shown by arrow **134**. By swirling, it is meant that the finger moves in an arcuate or circular manner. For example, the finger may rotate relative to an imaginary axis. In particular, the finger can be rotated through 360 degrees of rotation without stopping. This form of motion may produce continuous or incremental scrolling on the display screen **104**.

Referring to FIG. **3**B, and in accordance with one embodiment of the invention, the user **120** can slide his or her finger **132** radially between the inner and outer perimeter of the touch pad **110**. For example, the touch pad **110** may be actuated radially as shown by arrow **140**.

Referring to FIG. **3**C, and in accordance with one embodiment of the invention, the user **120** can slide his or her finger **132** substantially tangentially from all sides of the touch pad **110**. For example, the touch pad **110** may be actuated forwards and backwards as shown by arrows **136** and side to side by arrows **138**.

FIG. **4** is a block diagram of a touchpad/display system **200**, in accordance with one embodiment of the invention. By way of example, the touchpad/display system **200** may be used in the media player shown in FIGS. **2** and **3**. The touchpad/display system **200** utilizes a touch pad **202** and a display screen **204**. The touchpad/display system **200** via the touch pad **202** is configured to transform a swirling or whirling motion **206** of an object such as a finger (as shown in FIG. **3**A) into translational or linear motion **208** on the display screen **204**. In one embodiment, the touch pad **202** is arranged to continuously determine the angular position of an object relative to the planar surface **209** of the touch pad **202**. This allows a user to linearly scroll through a media list **211** on the display screen **204** by swirling the object at least partially around the touch pad **202**. For example, by moving the object between any angular positions (e.g., 0–360) on the touch pad **202**.

As shown, the touch pad **202** is divided into several independent and spatially distinct zones **210** that are positioned around the periphery of the touch pad **202**. Any number of zones may be used. In one embodiment, each of the zones **210** represents a polar angle that specifies the angular position of the zone in the plane of the touch pad **202**. By way of example, the zones **210** may be positioned at 2 degree increments all the way around the touch pad **202**. Each of the zones **210** has an associated sensor disposed therein for detecting the presence of an object such as a finger. The sensors may be widely varied. For example, the sensors may be based on resistive sensing, surface acoustic wave sensing, pressure sensing (e.g., strain gauge, pressure plates, piezoelectric transducers or the like), optical sensing, capacitive sensing and the like. In general, when an object approaches a zone **210**, and more particularly a sensor, a position signal is generated that informs the media system **200** that the object is at a specific angular position on the touch pad **202**. When an object is moved between zones **210** or over multiple zones **210**, multiple position signals are generated. These multiple position signals may be used to determine the angular location, direction, speed and acceleration of the object as its moved around the touch pad **202**.

The system **200** also includes a control assembly **212** that is coupled to the touch pad **202**. The control assembly **212** is configured to acquire the position signals from the sensors and to supply the acquired signals to a processor **214** of the system. By way of example, the control assembly **212** may include an application specific integrated circuit (ASIC) that is configured to monitor the signals from the sensors, to compute the angular location, direction, speed and acceleration of the monitored signals and to report this information to the processor **214**.

The processor **214** is coupled between the control assembly **212** and the display screen **204**. The processor **214** is configured to control motion inputs to the display screen **204**. In one sequence, the processor **214** receives angular motion information from the control assembly **212** and then determines the next items of the media list **211** that are to be presented on the display screen **204**. In making this determination, the processor **214** can take into consideration the length of the media list **211**. Typically, the processor **214** will determine the rate of movement of the finger such that the transitioning to different items in the media list **211** can be performed faster when the finger is moved at greater speeds. In effect, to the user, the more rapid swirling of the finger enables effective acceleration of the transitioning of the list of media items **211**. Alternatively, the control assembly **212** and processor **214** may be combined in some embodiments.

Although not shown, the processor **214** can also control a buzzer to provide audio feedback to a user. The audio feedback can, for example, be a clicking sound produced by the buzzer. In one embodiment, the buzzer **216** is a piezoelectric buzzer. As the rate of transitioning through the list of media items increases, the frequency of the clicking sounds increases. Alternatively, when the rate that the finger is moved slows, the rate of transitioning through the list of media items decreases, and thus the frequency of the clicking sounds correspondingly slows. Hence, the clicking sounds provide audio feedback to the user as to the rate in which the media items within the list of media items are being traversed.

Additionally or alternatively, the system via the touch pad may be configured to transform radial motion an object such as a finger (as shown in FIG. **3**B) into translational or linear motion on the display screen. By radial, it is meant that the object moves in a substantially radial direction from the center of the touch pad to an outer perimeter of the touch pad. In one embodiment, the touch pad is arranged to continuously determine the radial position of a finger relative to the planar surface of the touch pad. This allows a user to linearly scroll through a media list on the display screen by moving the object at least partially between the center and outer perimeter of the touch pad. For example, by moving the object between a small and large radius (e.g., 0–3 cm) on the touch pad. This may also allow a user to vary a characteristic of the media player. For example, by moving radially, the user may be able to change the volume of sound being played on the media player (i.e., acts like a potentiometer).

Referring to FIG. **5**, a radial touch pad **218** will be discussed in accordance with one embodiment. By way of example, the touch pad **218** may replace the touch pad shown in FIG. **4**. The touch pad **218** may be divided into several independent and spatially distinct zones **220** that are positioned radially from the center **222** of the touch pad **218** to the perimeter **224** of the touch pad **218**. Any number of radial zones may be used. In one embodiment, each of the radial zones **220** represents a radial position in the plane of the touch pad **218**. By way of example, the zones **220** may be spaced at 5 mm increments. Like above, each of the zones **220** has an associated sensor disposed therein for detecting the presence of an object such as a finger. In general, when an object approaches a zone **220**, and more particularly a sensor, a position signal is generated that informs the system **200** that the object is at a specific radial position on the touch

pad **218**. When an object is moved between zones **220** or over multiple zones **220**, multiple position signals are generated. These multiple position signals may be used to determine radial location, direction, speed and acceleration of the object as its moved radially across the touch pad **218**.

Referring to FIG. **6**, a combination angular/radial touch pad **228** will be discussed in accordance with one embodiment. By way of example, the touch pad **228** may replace the touch pad shown in FIG. **4**. The touch pad **228** may be divided into several independent and spatially distinct zones **230** that are positioned both angularly and radially about the periphery of the touch pad **228** and from the center of the touch pad **202** to the perimeter of the touch pad **228**. Any number of combination zones may be used. In one embodiment, each of the combination zones **230** represents both an angular and radial position in the plane of the touch pad **228**. By way of example, the zones may be positioned at both 2 degrees and 5 mm increments. Like above, each of the combination zones **230** has an associated sensor disposed therein for detecting the presence of an object such as a finger. In general, when an object approaches a combination zone **230**, and more particularly a sensor, a position signal is generated that informs the system **200** that the object is at a specific angular and radial position on the touch pad **228**. When an object is moved between combination zones **230** or over multiple combinations zones **230**, multiple position signals are generated. These multiple position signals may be used to determine location, direction, speed and acceleration of the object as its angularly and radially moved across the touch pad **228**. The angular and radial zones may be initiated at the same time or they may be initiated at different times. For example, the angular zones may be initiated for scrolling through a media player and the radial zones may be initiated for varying the volume of a media player.

It should be noted that although the touch pads of FIGS. **4**–**6** are all shown as circular that they may take on other forms such as other curvilinear shapes (e.g., oval, annular and the like), rectilinear shapes (e.g., hexagon, pentagon, octagon, rectangle, square, and the like) or a combination of curvilinear and rectilinear (e.g., dome).

Furthermore, in order to provide higher resolution, a more complex arrangement of zones may be used. For example, as shown in FIG. **7**, the touch pad **238** may include angular and radial zones **240** that are broken up such that consecutive zones do not coincide exactly. In this embodiment, the touch pad **202** has an annular shape and the zones **240** follow a spiral path around the touch pad **202** from the center to the outer perimeter of the touch pad **202**.

FIG. **8** is a partially broken away perspective view of an annular capacitive touch pad **250**, in accordance with one embodiment of the present invention. By way of example, the annular capacitive touch pad **250** may correspond to the touch pad of FIG. **2**. The annular capacitive touch pad **250** is arranged to detect changes in capacitance as the user swirls an object such as a finger around the touch pad **250**. The annular capacitive touch pad **250** is also arranged to detect changes in capacitance as the user moves their finger radially across the touch pad **250**. The annular capacitive touch pad **250** is formed from various layers including at least a label layer **252**, an electrode layer **254** and a circuit board **256**. The label layer **252** is disposed over the electrode layer **254** and the electrode layer **254** is disposed over the circuit board **256**. At least the label **252** and electrode layer **254** are annular such that they are defined by concentric circles, i.e., they have an inner perimeter and an outer perimeter. The circuit board **256** is generally a circular piece having an outer perimeter that coincides with the outer perimeter of the label **252** and electrode layer **254**. It should be noted, however, that in some cases the circuit board **256** may be annular or the label **252** and electrode layer **254** may be circular.

The label layer **252** serves to protect the underlayers and to provide a surface for allowing a finger to slide thereon. The surface is generally smooth so that the finger does not stick to it when moved. The label layer **252** also provides an insulating layer between the finger and the electrode layer **254**. The electrode layer **254** includes a plurality of spatially distinct electrodes **258** that have positions based on the polar coordinate system. For instance, the electrodes **258** are positioned both angularly and radially on the circuit board **256** such that each of the electrodes **258** defines a distinct angular and radial position thereon. Any suitable number of electrodes **258** may be used. In most cases, it would be desirable to increase the number of electrodes **258** so as to provide higher resolution, i.e., more information can be used for things such as acceleration.

When configured together, the touch pad **250** provides a touch sensitive surface that works according to the principals of capacitance. As should be appreciated, whenever two electrically conductive members come close to one another without actually touching, their electric fields interact to form capacitance. In this configuration, the first electrically conductive member is one or more of the electrodes **258** and the second electrically conductive member is the finger of the user. Accordingly, as the finger approaches the touch pad **250**, a tiny capacitance forms between the finger and the electrodes **258** in close proximity to the finger. The capacitance in each of the electrodes **258** is measured by control circuitry **260** located on the backside of the circuit board **256**. By detecting changes in capacitance at each of the electrodes **258**, the control circuitry **260** can determine the angular location, direction, speed and acceleration of the finger as it is moved across the touch pad **250**. The control circuitry **260** can also report this information in a form that can be used by a computing device. By way of example, the control circuitry may include an ASIC (application specific integrated circuit).

FIG. **9** is a flow diagram of touch pad-display processing **300**, in accordance with one embodiment of the invention. The touch pad-display processing **300** allows a user to interact with a graphical user interface of a computing device. The touch pad-display processing **300** generally begins at block **302** where at least one control object is displayed on the graphical user interface. By way of example, the control object may be a slider bar that highlights information from a list in a menu displayed on a graphical user interface on a display screen. The displayed control object is generally controlled by the processor **214** illustrated in FIG. **3**. Following block **302**, the touch pad-display processing proceeds to block **304** where a user input is received. The user input may be received by the processor **214** illustrated in FIG. **3**. In one embodiment, the user input is an angular referenced input, as for example, a user input produced by a rotational user action such as a finger swirling across the touch pad. By way of example, the touch pad may correspond to the touch pad illustrated in FIG. **3**. In another embodiment, the user input is a radial referenced input, as for example, a user input produced by a radial user action such as a finger radially moving across the touch pad. By way of example, the touch pad may correspond to the touch pad illustrated in FIG. **4**.

Following block **304**, the touch pad-display processing proceeds to block **306** where the angular or radial referenced

user input is converted into a linear referenced input. The conversion may be implemented by the processor **212** illustrated in FIG. **3**. Following block **306**, the touch pad-display processing proceeds to block **308** where control object is modified in accordance with the linear referenced input. For example, the control object such as a slider bar may be linearly moved from a first item to a second item on a list or it may be moved through multiple items on a list (e.g., scrolling). The modification is generally implemented when the processor **214** illustrated in FIG. **3** supplies the linear referenced input to the graphical user interface on the display screen.

The various aspects of the invention described above can be used alone or in various combinations. The invention is preferably implemented by a combination of hardware and software, but can also be implemented in hardware or software. The invention can also be embodied as computer readable code on a computer readable medium. The computer readable medium is any data storage device that can store data which can thereafter be read by a computer system. Examples of the computer readable medium include read-only memory, random-access memory, CD-ROMs, DVDs, magnetic tape, optical data storage devices, and carrier waves. The computer readable medium can also be distributed over a network coupled computer systems so that the computer readable code is stored and executed in a distributed fashion.

Furthermore, although a scrolling feature is described, it should be noted that a scrolling feature is not a limitation and that the touch pad may be used to manipulate other features. For example, the touch pad may be used to adjust a volume control in an audio application. In addition, the touch pad may be used to advance through frames in a movie in video editing applications. The touch pad may also be used in video game applications.

The advantages of the invention are numerous. Different embodiments or implementations may yield one or more of the following advantages. It should be noted that this is not an exhaustive list and there may be other advantages which are not described herein. One advantage of the invention is that a user is able to easily and rapidly traverse a lengthy list of media items. Another advantage of the invention is that a substantial portion of the touch pad is accessible to the user, i.e., the touch pad provides a large surface area for manipulation thereof. Another advantage of the invention is that the touch pad can be continuously actuated by a simple swirling motion of a finger, i.e., the finger can be rotated through 360 degrees of rotation without stopping. Another advantage of the invention is that the touch pad provides more range of finger positions. For example, a left handed user may choose to use one portion of the touch pad while a right handed user may choose to use another portion of the touch pad. In essence, the touch pad is more ergonomic. Another advantage of the invention is that the touch pad makes the media player more aesthetically pleasing. Another advantage of the invention is that the touch pad allows an intuitive way to scroll on a display screen. For example, the user can manipulate the his or her finger side to side for horizontal scrolling and the user can manipulate his or her finger backwards and forwards for vertical scrolling.

While this invention has been described in terms of several preferred embodiments, there are alterations, permutations, and equivalents, which fall within the scope of this invention. For example, although the invention has been described in terms of an MP3 music player, it should be appreciated that certain features of the invention may also be applied to other types of media players such as video recorders, cameras, and the like. Furthermore, the MP3 music player described herein is not limited to the MP3 music format. Other audio formats such as MP3 VBR (variable bit rate), AIFF and WAV formats may be used. Moreover, certain aspects of the invention are not limited to handheld devices. For example, the touch pad may also be used in other computing devices such as a portable computer, personal digital assistants (PDA), cellular phones, and the like. The touch pad may also be used a stand alone input device that connects to a desktop or portable computer. It should also be noted that there are many alternative ways of implementing the methods and apparatuses of the present invention. For example, although the touch pad has been described in terms of being actuated by a finger, it should be noted that other objects may be used to actuate it in some cases. For example, a stylus or other object may be used in some configurations of the touch pad. It is therefore intended that the following appended claims be interpreted as including all such alterations, permutations, and equivalents as fall within the true spirit and scope of the present invention.

What is claimed is:

1. A media player for storing and playing media such as audio, video or images, the media player comprising:

a housing that encloses internally various electrical components that provide computing operations for the media player;

a touch pad supported by the housing and providing a first user input element for the media player, the touch pad being based on polar coordinates and including angular input areas for processing input from a swirling finger motion;

a button disposed at a central portion of the touch pad, the button being distinct from the touch pad and providing a second user input element for the media player, the button processing input from a finger pressing thereon; and

an audio delivery device configured to output music.

2. The media player as recited in claim **1** wherein the media player is a music player, a video recorder or a camera.

3. The media player as recited in claim **1** further including a display screen configured to display text and graphics to a user of the media device, the display screen being supported by the housing.

4. The media player as recited in claim **1** wherein the touch pad is arranged to receive input from a finger moving about a surface of the touch pad in order to implement a control function for controlling various applications associated with the media player.

5. The media player as recited in claim **4** wherein the control function is associated with moving an object or performing an action with respect to the display screen.

6. The media player as recited in claim **5** wherein the control function corresponds to a scrolling feature that allows an object to move from one media item to another media item in a group of media items displayed on the display screen, the object designating a particular media item to be selected, the selection being performed by the button.

7. The media player as recited in claim **4** wherein the control function is associated with making selections or issuing commands for use by the audio delivery device.

8. The media player as recited in claim **7** wherein the control function corresponds to a volume control feature, the volume being based on the amount of swirling finger motion.

9. The media player as recited in claim 1 wherein the touch pad additionally includes radial input areas for processing input from a radial finger motion.

10. The media player as recited in claim 1 wherein consecutive angular input areas do not coincide exactly.

11. The media player as recited in claim 10 wherein the zones follow a spiral path around the touch pad from the center to outer perimeter of the touch pad.

12. The media player as recited in claim 1 wherein the angular input areas are positioned at 2 degree increments all the way around the touch pad.

13. A media player for storing and playing media such as audio, video or images, the media player comprising:

a housing that encloses internally various electrical components that provide computing operations for the media player;

a touch pad supported by the housing and configured to provide one or more control functions for controlling various applications associated with the media player, the touch pad being based on polar coordinates and including only radial input areas for processing input from a radial finger motion; and

a media delivery device configured to output the media to a user of the media device, the media delivery device being an audio delivery device configured to output music to a user.

14. A pocket sized handheld computing device, comprising:

computing hardware for providing at least one application;

a display screen configured to display text and graphics associated with the at least one application; and

an touch pad based on capacitance and configured to provide one or more control functions for allowing a user of the computing device to provide inputs to the at least one application, the capacitive based touch pad being form from various interconnected layers including,

an annular and circular label layer having an inner perimeter and a outer perimeter;

an annular and circular electrode layer disposed below the label layer and having an inner perimeter and an outer perimeter that substantially coincide with the inner and outer perimeter of the label layer, the electrode layer including a plurality of angularly positioned electrodes that are based on Polar coordinates and within the inner and outer perimeter, the inner and outer perimeter defining the working boundary of the capacitive based touch pad, the touch pad including angular electrodes for processing input from a swirling finger motion and radial electrodes for processing input from a radial finger motion;

a circular circuit board disposed below the electrode layer and having a outer perimeter that substantially coincides with the outer perimeter of the label and electrode layers; and

control circuitry disposed below the circuit board and configured to detect capacitive changes at each of the electrodes.

15. The computing device as recited in claim 14 further comprising a button disposed at a center region and within the inner perimeter of the touch pad.

16. The computing device as recited in claim 15 wherein the touch pad and button are circular.

17. The computing device as recited in claim 14 wherein the touch pad includes input areas that are not based on Cartesian coordinates.

18. The computing device as recited in claim 14 wherein the computing device is a media player capable of processing at least one of audio media, video media or image media.

19. The touch pad assembly as recited in claim 14 wherein the polar coordinate information controls the movement of at least one control object on a display screen of the computing device.

20. The device as recited in claim 19 wherein the angular or radial motions cause the control object to wove linearly from one media item to a next media item in a list of media items, the linear movements being based on the angular or radial motions.

21. The device as recited in claim 20 wherein the media items are songs.

22. The device as recited in claim 14 wherein the touch pad provides angular or radial electrodes about a center region, wherein the display screen displays at least one control object via a graphical user interface, and wherein a controller of the control circuitry receives a user angular or radial input from the angular or radial input areas of the touch pad, converts the user angular or radial input into a control input, and supplies the control input to the at least one control object of the graphical user interface of the display screen.

23. The device as recited in claim 22, wherein the at least one control object is a linear graphical user interface component and wherein the control input for the linear graphical user interface component causes a linear interaction therewith.

24. The device as recited in claim 14 wherein the display screen presents a media list of media items and a slider bar that highlights one of the media items, the slider bar being configured to linearly traverse through the media list in order to highlight a desired media item, the motion of the slider bar being based on the polar coordinate information.

25. A battery powered pocket sized handheld music player, comprising:

a housing that supports various electrical components that provide computing operations for the music player;

a hard drive disposed inside the housing and configured to store a plurality of songs in MP3 format;

a display screen provided at a top half of a front surface of the housing, and configured to present a list of songs from the plurality of stored songs and to present a slider bar that is capable of linearly traversing through the song list in order to highlight a desired song from the list of songs;

a touch pad assembly provided at a lower half of a front surface of the housing, and configured to sense the motion of a finger moving thereon, the touch pad assembly including a planar touch surface that is dimensioned to receive an entire finger tip thereon, the top of the planar touch surface being substantially flush with the front surface of the housing;

a controller disposed inside the housing and configured to acquire motion information from the touch pad assembly and to control various features of the music player based on motion information provided by the touch pad assembly, the features including moving the slider bar through the list of songs, and controlling the volume of the music that is outputted byte music player, the

direction and speed of the slider bar being based at least in part on the direction and speed of the finger moving across the planar touch surface of the touch pad assembly;

a button provided at the front surface of the housing and in the center of the touch pad assembly, the button being configured to select the desired song highlighted by the slider bar;

an audio feedback device disposed inside the housing, and configured to provide audio feedback in the form of clicks based on the speed of the slider bar as it traverses through the song list; and

audio output components for outputting music associated with the selected desired song from the list of songs, the components including at least an amplifier, a digital signal processor, and a headphone jack.

26. The music player as recited in claim **25** wherein the controller is configured to transform angular motion on the touch pad assembly to linear motion in the display screen.

27. The music player as recited in claim **25** wherein the processor is configured to transform radial motion on the touch pad assembly to linear motion in the display screen.

28. The music player as recited in claim **25** wherein the processor is configured to transform tangential motion on the touch pad assembly to linear motion in the display screen.

* * * * *

UNITED STATES PATENT AND TRADEMARK OFFICE

CERTIFICATE OF CORRECTION

PATENT NO. : 7,046,230 B2
APPLICATION NO. : 10/188182
DATED : May 16, 2006
INVENTOR(S) : Zadesky et al.

It is certified that error appears in the above-identified patent and that said Letters Patent is hereby corrected as shown below:

In the Title Page:

In the title, # 54 and Col. 1 line 1, change "TOUCH PAD HANDHELD DEVICE" to --TOUCH PAD FOR HANDHELD DEVICE--.

Title Page
In the "(60) Related U.S. Application Data" section, delete "provisional application No. 60/346,237, filed on Oct. 22, 2001--.

In the Specification:

Column 3, line 10, change "case of discussion" to --ease of discussion--.

In the Claims:

In line 2 of claim 20 (column 16, line 13) change "wove linearly" to --move linearly--.

In line 26 of claim 25 (column 16, line 67) change "byte" to --by the--.

Signed and Sealed this

Sixth Day of February, 2007

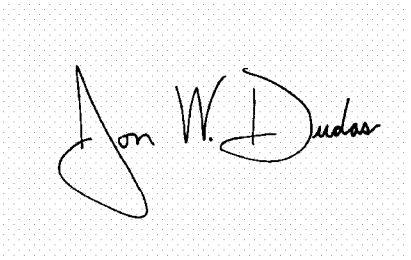

JON W. DUDAS
Director of the United States Patent and Trademark Office