UNITED STATES PATENT AND TRADEMARK OFFICE

BEFORE THE PATENT TRIAL AND APPEAL BOARD

APPLE INC.
Petitioner,

v.

INGENIOSPEC, LLC.
Patent Owner.

Patent No. 11,644,693

Inter Partes Review No. IPR2026-00339

DECLARATION OF CHRIS KYRIAKAKIS

I. INTRODUCTION 1
II. SUMMARY OF GROUNDS 4
III. QUALIFICATIONS AND EXPERTISE 6
IV. LEGAL UNDERSTANDING 11
A. My Understanding of Claim Construction 11
B. A Person Having Ordinary Skill in the Art 12
C. My Understanding of Obviousness 13
V. THE ’693 PATENT 14
A. Background of the ’693 Patent 14
B. Priority Date 14
C. Prosecution History of the ’693 Patent 15
D. Claim Construction 15
VI. GROUND 1: CLAIMS 1-5, 14-19, 24, 25, 27, 28, 42, 59, 60, 62, 63, AND 75 ARE RENDERED OBVIOUS BY ANDERSON 17
A. Summary of Anderson 17
B. Claim 1 21
1. [Preamble] *A personal audio system operable to at least generate customized audio output, comprising:* 21
2. [A] *a pair of ear buds, each configured to be placed in an ear of a user; and* 21
3. [B] *a mobile communication device at least for supporting audio output, the mobile communication device configured to store at least a hearing profile associated with the user, the stored hearing profile associated with the user at least characterizes hearing impairment regarding the user's ability to hear,* 23
4. [C] *the mobile communication device configured to produce audio output signals customized for the user based on at least the stored hearing profile associated with the user such that the customized audio output signals at least compensate for the hearing impairment regarding the user’s ability to hear,* 26

5. [D] *the mobile communication device configured to produce the customized audio output signals using at least signal amplification,* 27

6. [E] *and the mobile communication device configured to transmit the customized audio output signals to the pair of ear buds,* 27

7. [F] *wherein each of the ear buds is configured to receive at least a portion of the customized audio output signals transmitted by the mobile communication device, and* 28

8. [G] *wherein each of the ear buds is configured to generate at least a portion of the customized audio output for the user in accordance with at least the portion of the customized audio output signals being received.* 28

C. Claim 2 28

1. [Preamble] *A personal audio system as recited in claim 1,* 28

2. [A] *wherein the mobile communication device is configured to establish the hearing profile for the user.* 28

D. Claim 3 29

1. [Preamble] *A personal audio system as recited in claim 2,* 29

2. [A] *wherein the hearing profile for the user is established by the mobile communication device at least via generating audio tones and outputting such to one or more of the ear buds and receiving a user indication corresponding to the user's ability to hear the generated audio tones.* 29

E. Claim 4 30

1. [Preamble] *A personal audio system as recited in claim 1,* 30

2. [A] *wherein the signal amplification is frequency-dependent amplification.* 30

F. Claim 5 30

1. [Preamble] *A personal audio system as recited in claim 1,* 30

2. [A] *wherein each of the earbuds includes a speaker, and*.....30

3. [B] *wherein the at least a portion of the customized audio output being generated by each of the ear buds is generated by the corresponding speaker.* 30

G. Claim 14 31

1. [Preamble] *A personal audio system as recited in claim 1,*.....31

2. [A] *wherein the mobile communication device is or includes a mobile phone.*.....31

H. Claim 15 31

1. [Preamble] *A personal audio system as recited in claim 1,*.....31

2. [A] *wherein the customized audio output includes music.* 31

I. Claim 16 32

1. [Preamble] *A personal audio system as recited in claim 1,*.....32

2. [A] *wherein the customized audio output includes a voice conversation.* 32

J. Claim 17 32

1. [Preamble] *A personal audio system as recited in claim 1,*.....32

2. [A] *wherein at least one of the earbuds in the pair of earbuds comprises a plurality of microphones configured for audio pickup,* 32

3. [B] *wherein at least one of the microphones is configured to pick up an audio command, and* 33

4. [C] *wherein the mobile communication device is configured to induce an operation or action based on the audio command.* 33

K. Claim 18 33

1. [Preamble] *A personal audio system as recited in claim 1,*.....33

2. [A] *wherein the customized audio output signals are produced based on amplifying or attenuating different frequency bands differently according to at least the stored hearing profile.* 34

L. Claim 19 34

1. [Preamble] *A personal audio system as recited in claim 1,* 34

2. [A] *wherein the hearing profile associated with the user is self-determined by the user.* 34

M. Claim 24 35

1. [Preamble] *A personal audio system operable to at least generate customized audio output, comprising:* 35

2. [A] *a head-worn wearable electronic device including at least a pair of speakers, each of the speakers being configured to be wearable proximate to an ear of a user; and* 35

3. [B] *a mobile communication device at least for supporting audio output, the mobile communication device configured to store at least a hearing profile associated with the user, the stored hearing profile associated with the user at least characterizes hearing impairment regarding the user's ability to hear,* 39

4. [C] *the mobile communication device configured to produce audio output signals customized for the user based on at least the stored hearing profile associated with the user such that the customized audio output signals at least compensate for the hearing impairment regarding the user's ability to hear,* 39

5. [D] *the mobile communication device configured to produce the customized audio output signals using at least signal amplification,* 39

6. [E] *and the mobile communication device configured to transmit the customized audio output signals to the pair of speakers,* 40

7. [F] *wherein each of the speakers is configured to receive at least a portion of the customized audio output signals transmitted by the mobile communication device, and*.....40

8. [G] *wherein each of the speakers is configured to generate at least a portion of the customized audio output for the user in accordance with at least the portion of the customized audio output signals being received.* 40

N. Claim 25 40

1. [Preamble] *A personal audio system as recited in claim 24,*.....40

2. [A] *wherein the head-worn wearable electronic device includes at least a rechargeable battery, and*.....41

3. [B] *wherein the rechargeable battery is able to be charged when the head-worn wearable electronic device is coupled to a docking station.*.....42

O. Claim 27 42

1. [Preamble] *A personal audio system as recited in claim 24,*.....42

2. [A] *wherein the mobile communication device is configured to wirelessly communicate with the head-worn wearable electronic device over a wireless network.*.....42

P. Claim 28 42

1. [Preamble] *A personal audio system as recited in claim 27,*.....42

2. [A] *wherein the wireless network is a short-range wireless network.*.....42

Q. Claim 42 43

1. [Preamble] *A personal audio system as recited in claim 24,*.....43

2. [A] *wherein the head-worn wearable electronic device comprises: a first head-worn structure including at least a first speaker of the pair of speakers, the first speaker being wearable proximate to a first ear of the user; and* 43

3. [B] *a second head-worn structure including at least a second speaker of the pair of speakers, the second speaker being wearable proximate to a second ear of the user.* 43

R. Claim 59 43

1. [Preamble] *A personal audio system as recited in claim 42,* 43

2. [A] *wherein the first head-worn structure comprises first electronic circuitry configured to provide audio alerts to the user via the first speaker.* 44

S. Claim 60 45

1. [Preamble] *A personal audio system as recited in claim 59,* 45

2. [A] *wherein the audio alerts are dependent on one or more user preference settings.* 45

T. Claim 62 45

1. [Preamble] *A personal audio system as recited in claim 42,* 45

2. [A] *wherein the first head-worn structure comprises: a physical condition sensor configured to acquire data pertaining to a physical condition of the user, the physical condition sensor being provided at least partially internal to the first head-worn structure.* 45

U. Claim 63 46

1. [Preamble] *A personal audio system as recited in claim 62,* 46

2. [A] *wherein the acquired data by the physical condition sensor includes data pertaining to or dependent on heart beats of the user.* 46

V. Claim 75 46

1. [Preamble] *A personal audio system operable to at least generate customized audio output, comprising:* 46

2. [A] *a pair of speakers, each of the speakers being configured to be wearable proximate to an ear of a user; and* 46

3. [B] *a mobile communication device at least for supporting audio output, the mobile communication device configured to store at least a hearing characteristic associated with the user, the stored hearing characteristic associated with the user at least characterizes hearing impairment regarding the user's ability to hear,* 47

4. [C] *the mobile communication device configured to produce customized audio output signals for the user based on at least the stored hearing characteristics associated with the user such that the customized audio output signals at least compensate for the hearing impairment regarding the user's ability to hear,* 47

5. [D] *the mobile communication device configured to produce the customized audio output signals using at least signal amplification, and* 47

6. [E] *the mobile communication device configured to transmit the customized audio output signals to the pair of speakers,* 47

7. [F] *wherein each of the speakers is configured to receive at least a portion of the customized audio output signals transmitted by the mobile communication device, and* 47

8. [G] *wherein each of the speakers is configured to generate at least a portion of the customized audio output for the user in accordance with at least the portion of the customized audio output signals being received.* 48

VII. GROUND 2: CLAIMS 6-13, 50, 61, AND 76 ARE RENDERED OBVIOUS BY ANDERSON IN VIEW OF NEMIROVSKI 48

A. Summary of Nemirovski 48

B. Motivation to Combine with Reasonable Expectation of Success 50

C. Claim 6 53

1. [Preamble] *A personal audio system as recited in claim 1,* 53

2. [A] *wherein at least one of the earbuds in the pair of earbuds comprises an array of microphones configured for directional audio pickup.* 53

D. Claim 7 55

1. [Preamble] *A personal audio system as recited in claim 6,* 55

2. [A] *wherein direction of the directional audio pickup is in front of the user.* 55

E. Claim 8 56

1. [Preamble] *A personal audio system as recited in claim 6,* 56

2. [A] *wherein direction of the directional audio pickup is outward from the user.* 56

F. Claim 9 56

1. [Preamble] *A personal audio system as recited in claim 1,* 56

2. [A] *wherein at least one of the earbuds in the pair of earbuds comprises a plurality of microphones configured for audio pickup.* 56

G. Claim 10 57

1. [Preamble] *A personal audio system as recited in claim 9,* 57

2. [A] *wherein the plurality of microphones includes at least: a first microphone configured to receive audio pickup from the user; and* 57

3. [B] *a second microphone configured to receive audio pickup outward away from the user.* 57

H. Claim 11 57

1. [Preamble] *A personal audio system as recited in claim 10,* 57

2. [A] *wherein the audio pickup from at least the second microphone is used at least for noise cancelation.* 57

I. Claim 12 58

1. [Preamble] *A personal audio system as recited in claim 11,* 58

2. [A] *wherein at least a portion of the audio pickup from the second microphone is subtracted from the audio pickup from the first microphone.* 58

J. Claim 13 59

1. [Preamble] *A personal audio system as recited in claim 12,* 59

2. [A] *wherein each of the ear buds includes at least a speaker and is configured to generate at least a portion of the customized audio output for the user via the speaker.* 59

K. Claim 50 59

1. [Preamble] *A personal audio system as recited in claim 42,* 59

2. [A] *wherein the first head-worn structure of the head-worn wearable electronic device comprises: a first microphone configured to pick up at least audio input from at least the user, the first microphone being at least partially in the first head-worn structure and is positioned to be directed towards the user when the first head-worn structure is being worn by the user; and* 59

3. [B] *a second microphone configured to pick up at least ambient sound input associated with an environment in the vicinity of the first head-worn structure, the second microphone being positioned to be directed away from the user when the head-worn wearable electronic device is being worn by the user.* 61

L. Claim 61 62

1. [Preamble] *A personal audio system as recited in claim 42,* 62

2. [A] *wherein the first head-worn structure of the head-worn wearable electronic device comprises: a first microphone configured to pick up at least audio input from at least the user, the first microphone being at least partially in the first head-worn structure; and* 62

3. [B] *a second microphone configured to pick up at least ambient sound input associated with an environment in the vicinity of the first head-worn structure,* 62

4. [C] *wherein the second microphone is positioned to be further away from mouth of the user than the first microphone when at least the first head-worn structure of the head-worn wearable electronic device is being worn.* 62

M. Claim 76 64

1. [Preamble] *A personal audio system as recited in claim 75,* 64

2. [A] *wherein each of the speakers being configured to be at least partially inserted into an ear of the user.* 64

VIII. GROUND 3: CLAIMS 20-22 AND 29 ARE RENDERED OBVIOUS BY ANDERSON IN VIEW OF EATON 64

A. Summary of Eaton 64

B. Motivation to Combine with Reasonable Expectation of Success 66

C. Claim 20 67

1. [Preamble] *A personal audio system as recited in claim 1,* 67

2. [A] *wherein the mobile communication device includes computing capabilities and a storage device, the storage device storing at least a software program executed by the mobile communication device to enable the user to establish the hearing profile associated with the user, and* 68

3. [B] *wherein the mobile communication device is configured to establish the hearing profile associated with the user via the software program executed by the mobile communication device based on the user interacting with the software program via the mobile communication device.* 68

D. Claim 21 68

1. [Preamble] *A personal audio system as recited in claim 20,* 68

2. [A] *wherein the software program at least interactively guides the user to establish the hearing profile for the user.* 69

E. Claim 22 69

1. [Preamble] *A personal audio system as recited in claim 21,* 69

2. [A] *wherein the software program at least interactively guides the user to establish the hearing profile for the user by at least causing various audio tones to be output to the user via at least one of the earbuds, prompting the user to provide a hearing input with respect to one or more of the various audio tones being output, and receiving the hearing user input pertaining to one or more of the various audio tones being output.* 69

F. Claim 29 70

1. [Preamble] *A personal audio system as recited in claim 27,* 70

2. [A] *wherein the short-range wireless network is a Bluetooth network.* 70

IX. GROUND 4: CLAIMS 23, 30, 36-38, AND 54-58 ARE RENDERED OBVIOUS BY ANDERSON IN VIEW OF IRVIN 70

A. Summary of Irvin 70

B. Motivation to Combine with Reasonable Expectation of Success 74

C. Claim 23 77

1. [Preamble] *A personal audio system as recited in claim 1,* 77

2. [A] *wherein at least one of the earbuds in the pair of earbuds comprises: a radiation detector configured to capture radiation data; and* 77

3. [B] *first electronic circuitry electrically connected to the radiation detector, the first electronic circuitry configured to process at least the radiation data captured by the radiation detector,* 77

4. [C] *wherein the first electronic circuitry is configured to determine whether the earbud is being worn by a user based on at least the processed radiation data.* 79

D. Claim 30 79

1. [Preamble] *A personal audio system as recited in claim 24,* 79

2. [A] *wherein the head-worn wearable electronic device includes an accelerometer.* 79

E. Claim 36 79

1. [Preamble] *A personal audio system as recited in claim 24,* 79

2. [A] *wherein the head-worn wearable electronic device includes a force sensor configured to receive a user input based at least on sensing force applied to the force sensor.* 79

F. Claim 37 80

1. [Preamble] *A personal audio system as recited in claim 36,* 80

2. [A] *wherein the force sensor is configured to detect the user input, the detected user input operating to alter at least an operation of the head-worn wearable electronic device.* 81

G. Claim 38 82

1. [Preamble] *A personal audio system as recited in claim 37,* 82

2. [A] *wherein the head-worn wearable electronic device is configured to support audio output to the user, and* 82

3. [B] *wherein the at least one operation of the head-worn electronic device being altered concerns control of the audio output being provided to the user.* 82

H. Claim 54 83

1. [Preamble] *A personal audio system as recited in claim 42,* 83

2. [A] *wherein the first head-worn structure comprises: an infrared emitter configured to at least direct infrared signals towards the user when at least the first head-worn structure of the head-worn wearable electronic device is being worn; and* 83

3. [B] *an infrared detector configured to detect infrared radiation reflected back from the user when at least the first head-worn structure of the head-worn wearable electronic device is being worn.* 84

I. Claim 55 84

1. [Preamble] *A personal audio system as recited in claim 54,* 84

2. [A] *wherein electronic circuitry within the first head-worn structure is configured to facilitate determining whether the first head-worn structure is being worn by the user based on at least the detected infrared radiation.* 84

J. Claim 56 84

1. [Preamble] *A personal audio system as recited in claim 42,* 84

2. [A] *wherein the first head-worn structure comprises: a radiation detector configured to capture radiation data; and* 85

3. [B] *first electronic circuitry provided within the first head-worn structure and electrically connected to the radiation detector, the first electronic circuitry configured to process at least the radiation data captured by the radiation detector.* 85

K. Claim 57 85

1. [Preamble] *A personal audio system as recited in claim 56,* 85

2. [A] *wherein the first electronic circuitry is configured to determine whether the first head-worn structure is being worn by a user based on at least the processed radiation data.* 85

L. Claim 58 85

1. [Preamble] *A personal audio system as recited in claim 57,* 85

2. [A] *wherein the radiation detector comprises a photodetector.* 86

X. GROUND 5: CLAIMS 26, 52, AND 53 ARE RENDERED OBVIOUS BY ANDERSON IN VIEW OF BOZZONE 86

A. Summary of Bozzone 86

B. Motivation to Combine with Reasonable Expectation of Success 88

C. Claim 26 89

1. [Preamble] *A personal audio system as recited in claim 24,* 89

2. [A] *wherein the head-worn wearable electronic device includes at least a rechargeable battery and at least one conductive element,* 89

3. [B] *wherein the rechargeable battery is able to be electrically coupled via the at least one conductive element to a charging apparatus and charged when the head-worn wearable electronic device is placed within the charging apparatus, and* 90

4. [C] *wherein the electrical coupling of the at least one conductive element with the charging apparatus is supported by at least a magnetic element.* 90

D. Claim 52 91

1. [Preamble] *A personal audio system as recited in claim 42,* 91

2. [A] *wherein the first head-worn structure of the wearable electronic device comprises: a battery internal to the first head-worn structure; and* 91

3. [B] *at least one conductive element that facilitates electrical coupling with the battery, the at least one conductive element is at least partially internal to the first head-worn structure but remains at least partially exposed external to the first head-worn structure, and the at least one conductive element comprises at least one conductive pad,* 91

4. [C] *wherein the battery is able to be electrically coupled via the at least one conductive element to a charging apparatus and charged when at least the first head-worn structure of the head-worn wearable electronic device is placed within the charging apparatus, and* 92

5. [D] *wherein the electrical coupling of the at least one conductive element with the charging apparatus is supported by at least a magnetic element.* 92

E. Claim 53 92

1. [Preamble] *A personal audio system as recited in claim 52,* 92

2. [A] *wherein the head-worn wearable electronic device comprises: a microphone at least partially internal to the first head-worn structure,* 92

3. [B] *wherein the head-worn wearable electronic device is configured to receive a voice input via the microphone, determine a requested operation from the voice input using voice recognition, and control an operation by the head-worn wearable electronic device based on the requested operation.* 95

XI. GROUND 6: CLAIMS 31, 32, 43, AND 44 ARE RENDERED OBVIOUS BY ANDERSON IN VIEW OF PACZKOWSKI 95

A. Summary of Paczkowski 95

B. Motivation to Combine with Reasonable Expectation of Success 96

C. Claim 31 98

1. [Preamble] *A personal audio system as recited in claim 24,* 98

2. [A] *wherein the head-worn wearable electronic device includes a plurality of circuit boards, each circuit board including at least one integrated circuit mounted thereto.* 98

D. Claim 32 99

1. [Preamble] *A personal audio system as recited in claim 31,* 99

2. [A] *wherein at least one of the circuit boards is a flexible printed circuit board.* 100

E. Claim 43 100

1. [Preamble] *A personal audio system as recited in claim 42,* 100

2. [A] *wherein the first head-worn structure comprises: a first circuit board internal to the first head-worn structure,* 100

3. [B] *the first circuit board supporting at least a first integrated circuit and a second integrated circuit, the first integrated circuit and the second integrated circuit being physically attached to the first circuit board,* 100

4. [C] *and the first integrated circuit being electrically connected to the second integrated circuit or another electronic component.* 101

F. Claim 44 102

1. [Preamble] *A personal audio system as recited in claim 43,* 102

2. [A] *wherein the first circuit board is a flexible circuit board.* 102

XII. GROUND 7: CLAIMS 33-35 ARE RENDERED OBVIOUS BY ANDERSON IN VIEW OF BODLEY 103

A. Summary of Bodley 103

B. Motivation to Combine with Reasonable Expectation of Success 105

C. Claim 33 106

1. [Preamble] *A personal audio system as recited in claim 24,* 106

2. [A] *wherein the head-worn wearable electronic device includes a touch sensitive surface.* 107

D. Claim 34 108

1. [Preamble] *A personal audio system as recited in claim 33,* 108

2. [A] *wherein the touch sensitive surface is configured to detect a user input, the detected user input operating to at least alter operation of the head-worn wearable electronic device.* 108

E. Claim 35 108

1. [Preamble] *A personal audio system as recited in claim 34,* 108

2. [A] *wherein the head-worn wearable electronic device is configured to support audio output to the user, and* 108

3. [B] *wherein the at least one operation of the head-worn electronic device being altered concerns control of the audio output being provided to the user.* 109

XIII. GROUND 8: CLAIMS 45-48 ARE RENDERED OBVIOUS BY ANDERSON IN VIEW OF BODLEY AND ZADESKY 109

A. Summary of Zadesky 109

B. Motivation to Combine with Reasonable Expectation of Success 111

C. Claim 45 112

1. [Preamble] *A personal audio system as recited in claim 42,* 112

2. [A] *wherein the first head-worn structure comprises: a user input device, the user input device being configured to receive a user input, the user input device is based on at least capacitive effect, wherein the user input being received induces at least a capacitive change to produce at least an electrical response.* 112

D. Claim 46 113

1. [Preamble] *A personal audio system as recited in claim 45,* 113

2. [A] *wherein the user input device is configured to distinguish at least a direction of the user input with respect to the user input device.* 113

E. Claim 47 114

1. [*Preamble*] *A personal audio system as recited in claim 46,* 114

2. [A] *wherein the user input device is configured to detect at least a sliding of a finger action with respect to the user input device.* 114

F. Claim 48 115

1. [Preamble] *A personal audio system as recited in claim 45,* 115

2. [A] *wherein the user input device is configured to distinguish at least whether the user input pertains to a forward sliding action or a backward sliding action with respect to the user input device.* 115

XIV. GROUND 9: CLAIM 49 IS RENDERED OBVIOUS BY ANDERSON IN VIEW OF BODLEY, ZADESKY, AND PACZKOWSKI 115

A. Claim 49 115

1. [Preamble] *A personal audio system as recited in claim 48,* 115

2. [A] *wherein the head-worn wearable electronic device comprises: a second circuit board internal to the second head-worn structure,* 115

3. [B] *the second circuit board supporting at least a third integrated circuit and a fourth integrated circuit, the third integrated circuit and the fourth integrated circuit being physically attached to the second circuit board, and* 115

4. [C] *the third integrated circuit being electrically connected to the fourth integrated circuit or another electronic component.* 116

5. *Motivation to Combine* 116

XV. GROUND 10: CLAIM 51 IS RENDERED OBVIOUS BY ANDERSON IN VIEW OF LYNCH AND PACZKOWSKI 116

A. Summary of Lynch 116

B. Motivation to Combine Anderson and Lynch with Reasonable Expectation of Success 118

C. Claim 51 120

1. [Preamble] *A personal audio system as recited in claim 42,* 120

2. [A] *wherein the first head-worn structure comprises: a first circuit board internal to the first head-worn structure, the first circuit board supporting at least a first integrated circuit, the first integrated circuit being physically attached to the first circuit board,* 120

3. [B] *wherein the first integrated circuit includes at least a processing unit, and* 121

4. [C] *wherein the processing unit is configured to: determine an ambient sound level; and* 121

5. [D] *amplify audio output from the first speaker dependent at least in part on the ambient sound level.* 122

XVI. GROUND 11: CLAIMS 64-71 ARE RENDERED OBVIOUS BY ANDERSON IN VIEW OF LYNCH AND NEMIROVSKI 122

A. Motivation to Combine 122

B. Claim 64 122

1. [Preamble] *A personal audio system as recited in claim 24,* 122

2. [A] *wherein the head-worn wearable electronic device comprises: a head-worn structure including at least a first microphone, a second microphone, a speaker and a processing unit;* 122

3. [B] *wherein the first microphone is configured to pick up at least audio input from at least the user,* 123

4. [C] *wherein the second microphone is configured to pick up at least environmental audio input associated with an environment in the vicinity of the head-worn wearable electronic device, and* 123

5. [D] *wherein the processing unit is configured to process the audio input from at least the user via the first microphone to remove at least a portion of the environmental audio input associated with the environment picked up via the second microphone.* 123

C. Claim 65 123

1. [Preamble] *A personal audio system as recited in claim 64,* 123

2. [A] *wherein the audio input from at least the user picked-up via the first microphone includes at least a voice input, and* 123

3. [B] *wherein the environmental audio input associated with the environment includes at least ambient noise.* 124

D. Claim 66 124

1. [Preamble] *A personal audio system as recited in claim 64,* 124

2. [A] *wherein the processing unit is configured to process the audio input from at least the user picked-up via the first microphone to remove at least a portion of the environmental audio input picked-up via the second microphone.* 124

E. Claim 67 124

1. [Preamble] *A personal audio system as recited in claim 64,* 124

2. [A] *wherein the first microphone is at least partially in the head-worn structure and is positioned so as to be directed towards the user of the head-worn structure, and* ... 124

3. [B] *wherein the second microphone is at least partially in the head-worn structure so as to be directed away from the user of the head-worn structure.* 125

F. Claim 68 125

1. [Preamble] *A personal audio system as recited in claim 67,* 125

2. [A] *wherein the processing unit is configured to process the audio input picked-up via at least the first microphone to remove at least a portion of the environmental audio input picked-up via the second microphone.* 125

G. Claim 69 125

1. [Preamble] *A personal audio system as recited in claim 68,* 125

2. [A] *wherein the audio input from at least the user includes at least a voice input, and* 125

3. [B] *wherein the environmental audio input includes at least ambient noise.* 125

H. Claim 70 126

1. [Preamble] *A personal audio system as recited in claim 24,* 126

2. [A] *wherein the head-worn wearable electronic device comprises: a head-worn structure comprising at least two microphones and a processing unit,* 126

3. [B] *wherein the at least two microphones are configured to pick up (i) at least audio input from at least the user and (ii) at least environmental audio input associated with environmental sound in the vicinity of the head-worn structure, and* 126

4. [C] *wherein the processing unit is configured to: determine an environmental sound level based on at least the environmental audio input; and* 126

5. [D] *amplify at least a portion of the audio input from the first microphone, with the amplification being at least in part dependent on the environmental sound level.* 126

I. Claim 71 127

1. [Preamble] *A personal audio system as recited in claim 24,* 127

2. [A] *wherein the head-worn wearable electronic device comprises at least a first microphone, a second microphone and a processing unit,* 127

3. [B] *wherein the first microphone is configured to pick up at least audio sound from at least the user, wherein the second microphone is configured to pick up at least ambient noise associated with an environment in the vicinity of the head-worn wearable electronic device, and* ... 127

4. [C] *wherein the processing unit is configured to: determine an ambient noise level based on at least the ambient noise; and* 127

5. [D] *modify at least a portion of the audio sound picked-up via the first microphone, with the modification being at least in part dependent on the ambient noise level.* 127

XVII. GROUND 12: CLAIM 72 IS RENDERED OBVIOUS BY ANDERSON IN VIEW OF LYNCH, NEMIROVSKI, AND BOZZONE 128

A. Claim 72 128

1. [Preamble] *A personal audio system as recited in claim 24,* 128

2. [A] *wherein the head-worn wearable electronic device comprises at least a first microphone, a second microphone and a processing unit,* 128

3. [B] *wherein the first microphone is configured to pick up at least audio sound from at least the user,* 128

4. [C] *wherein the second microphone is configured to pick up at least ambient noise associated with an environment in the vicinity of the head-worn wearable electronic device,* 128

5. [D] *wherein the processing unit is configured to: determine an ambient noise level based on at least the ambient noise; and* 128

6. [E] *modify at least a portion of the audio sound picked-up via the first microphone, with the modification being at least in part dependent on the ambient noise level,* 128

7. [F] *wherein the head-worn wearable electronic device comprises at least a rechargeable battery and at least one conductive element,* 129

8. [G] *wherein the rechargeable battery is able to be electrically coupled via the at least one conductive element to a charging apparatus and charged when the head-worn wearable electronic device is placed within the charging apparatus,* 129

9. [H] *wherein the mobile communication device is configured to wirelessly communicate with the head-worn wearable electronic device over a wireless network, and* 129

10. [I] *wherein the mobile communication device is or includes a mobile phone,* 129

11. [J] *wherein the head-worn wearable electronic device is configured to receive a voice input via the first microphone, determine a requested operation from the voice input using voice recognition, and control an operation by the head-worn wearable electronic device based on the requested operation.* 129

12. *Motivation to Combine* 129

XVIII. GROUND 13: CLAIMS 73 AND 74 ARE RENDERED OBVIOUS BY ANDERSON IN VIEW OF LYNCH, NEMIROVSKI, BOZZONE, AND IRVIN 130

A. Motivation to Combine 130

B. Claim 73 130

1. [Preamble] *A personal audio system as recited in claim 72,* 130

2. [A] *wherein the head-worn wearable electronic device comprises: an infrared emitter configured to at least direct infrared signals towards the user when the head-worn wearable electronic device is being worn;* 130

3. [B] *an infrared detector configured to detect infrared radiation reflected back from the user when the head-worn wearable electronic device is being worn; and* 130

4. [C] *electronic circuitry configured to facilitate determining whether the head-worn wearable electronic device is being worn by the user based on at least the detected infrared radiation.* 131

C. Claim 74 131

1. [Preamble] *A personal audio system as recited in claim 73,* 131

2. [A] *wherein the electrical coupling of the at least one conductive element with the charging apparatus is supported by at least a magnetic element.* 131

Exhibit List

Exhibit Description	Exhibit #
U.S. Patent No. 11,644,693 to Howell et al.	EX1001
Prosecution History of U.S. Patent No. 11,644,693	EX1002
Declaration of Dr. Chris Kyriakakis	EX1003
U.S. Patent No. 5,721,783 to Anderson	EX1004
U.S. Patent No. 6,671,379 to Nemirovski	EX1005
WIPO International Publication No. WO 2001/54458 to Eaton et al.	EX1006
U.S. Patent No. 7,010,332 to Irvin et al.	EX1007
U.S. Patent No. 7,150,526 to Jannard et al.	EX1008
U.S. Patent No. 7,620,433 to Bodley	EX1009
U.S. Patent No. 7,046,230 to Zadesky et al.	EX1010
U.S. Patent No. 7,599,508 to Lynch et al.	EX1011
U.S. Patent No. 7,026,789 to Bozzone et al.	EX1012
U.S. Patent No. 6,674,869 to Paczkowski	EX1013
Defendant's Proposed Claim Constructions in *IngenioSpec, LLC v. Apple Inc.*, Case No. 1:25-cv-00867 (W.D. Tex. Dec. 22, 2025)	EX1014
Radio Shack 1996 Catalog	EX1015
Excerpts from R. GRAF, MODERN DICTIONARY OF ELECTRONICS (Butterworth-Heinemann 7th Ed. 1999)	EX1016

Bevan Yueh et al., *Screening and Management of Adult Hearing Loss in Primary Care: Scientific Review*, 289 JOURNAL OF THE AMERICAN MEDICAL ASSOCIATION 1976 (2003).	EX1017
P. Henry et al., *Bone Conduction: Anatomy, Physiology, and Communication*, Army Research Laboratory, ARL-TR-4138 (May 2007)	EX1018
Excerpts from R. MURPHY, INTRODUCTION TO AI ROBOTICS (MIT Press 2000)	EX1019
Manufacturer's Datasheet for Sharp PD100MC0MPx Photodiode	EX1020
U.S. Patent No. 7,500,746 to Howell et al.	EX1021
Plaintiff's Sept. 19, 2025 Infringement Claim Chart for U.S. Patent No. 11,644,693 in *IngenioSpec, LLC v. Apple Inc.*, Case No. 1:25-cv-00867 (W.D. Tex.)	EX1022
D. A. Spencer et al., *TCAS Experimental Unit (TEU) Hardware Description*, Lincoln Laboratory, AD-A169870 (June 6, 1986)	EX1023
Excerpts from P. SCHERZ ET AL., PRACTICAL ELECTRONICS FOR INVENTORS (McGraw-Hill 2000)	EX1024
Excerpts from L. BAXTER, CAPACITIVE SENSORS: DESIGN AND APPLICATIONS (IEEE Press 1997)	EX1025
Excerpts from P. HOROWITZ AND W. HILL, THE ART OF ELECTRONICS (Cambridge Univ. Press 2nd Ed. 1989)	EX1026
Curriculum Vitae of Dr. Chris Kyriakakis	EX1027

I, Chris Kyriakakis, make this declaration in connection with the *inter partes* review proceedings IPR2026-00339 and IPR2026-00340.

I. INTRODUCTION

1. I have been retained by counsel for Apple Inc. ("Petitioner" or "Apple") in connection with the proceedings IPR2026-00339 and IPR2026-00340. I submit this declaration in support of Apple's Petitions for *Inter Partes* Review of United States Patent No. 11,644,693 (EX1001, the "'693 patent") in those proceedings.

2. I have reviewed and am familiar with the '693 patent, which issued on May 9, 2023. I understand that Apple is filing two Petitions for *inter partes* (the "Petitions") that together seek to cancel claims 1-38 and 42-76 (the "challenged claims") of the '693 patent. I understand the number and volume of the challenged claims, in view of word limits for IPR petitions, necessitate two separate Petitions, with each Petition addressing different claims. My opinions herein are not in any way affected by how the challenged claims are distributed between the two Petitions, or by which of the two Petitions addresses a particular claim.

3. In preparation for this Declaration, I reviewed the exhibits provided by the Petitioner, including the '693 patent. In addition to the above exhibits and other documents, my opinions herein are based upon my personal knowledge,

professional judgment, education, and experience gained through my years as a scientist, professor, and consultant.

4. The ’693 patent is generally directed to wearable audio devices. (EX1001, 2:66-3:9.) I am familiar with the technology described in the ’693 patent as of its earliest possible priority date of July 28, 2004, as well as its actual U.S. filing date of June 25, 2022.

5. I have been asked to consider how a person of ordinary skill in the art (“POSITA”) would have understood the challenged claims in light of the disclosure of the ’693 patent. I also have been asked to consider how a POSITA would have understood the following prior art references:

Prior Art Reference	Abbreviation
U.S. Patent No. 5,721,783	Anderson (EX1004)
U.S. Patent No. 6,671,379	Nemirovski (EX1005)
WIPO International Publication No. WO 01/54458	Eaton (EX1006)
U.S. Patent No. 7,010,332	Irvin (EX1007)
U.S. Patent No. 7,150,526	Jannard (EX1008)
U.S. Patent No. 7,620,433	Bodley (EX1009)
U.S. Patent No. 7,046,230	Zadesky (EX1010)
U.S. Patent No. 7,599,508	Lynch (EX1011)
U.S. Patent No. 7,026,789	Bozzone (EX1012)
U.S. Patent No. 6,674,869	Paczkowski (EX1013)

6. Further, I have been asked to consider and provide my technical review, analysis, insights, and opinions regarding whether a POSITA would have understood the disclosures of the above references to render obvious the challenged claims.

7. I am being paid $575 per hour for my work on this matter. My compensation is not dependent on the outcome of these *inter partes* review proceedings and in no way affects the substance of my statements in this declaration.

8. I reside in Los Angeles, California, USA.

II. SUMMARY OF GROUNDS

9. I understand that the Petitions for *inter partes* review of the ’693 patent together assert grounds of unpatentability as summarized below:

Ground	35 U.S.C. §[1]	Claim(s)	Prior Art References
1	103	1-5, 14-19, 24, 25, 27, 28, 42, 59, 60, 62, 63, 75	Anderson
2	103	6-13, 50, 61, 76	Anderson, Nemirovski
3	103	20-22, 29	Anderson, Eaton
4	103	23, 30, 36-38, 54-58	Anderson, Irvin
5	103	26, 52, 53	Anderson, Bozzone
6	103	31, 32, 43, 44	Anderson, Paczkowski
7	103	33-35	Anderson, Bodley
8	103	45-48	Anderson, Bodley, Zadesky
9	103	49	Anderson, Bodley, Zadesky, Paczkowski
10	103	51	Anderson, Lynch, Paczkowski
11	103	64-71	Anderson, Lynch, Nemirovski
12	103	72	Anderson, Lynch, Nemirovski, Bozzone
13	103	73, 74	Anderson, Lynch, Nemirovski, Bozzone, Irvin

[1] Throughout this Declaration, all statutory citations are pre-AIA based on the earliest possible priority date of July 28, 2004.

I understand that because the challenged claims are split across two Petitions, such that each Petition challenges different claims, each of the Petitions may have fewer grounds than the grounds identified above. For the same reason, I understand that the grounds presented in each Petition may be numbered or ordered differently than they are numbered or ordered in the chart above, or in this Declaration. In this Declaration, any reference to a numerical ground (*e.g.*, "Ground 3") is a reference to the grounds as they are numbered in this Declaration, not necessarily as they are numbered in the Petitions. My opinions herein do not depend in any way on how the grounds may be numbered or ordered.

III. QUALIFICATIONS AND EXPERTISE

10. In formulating my opinions, I have relied upon my knowledge, training, and experience. My qualifications are stated more fully in my curriculum vitae, which has been provided as exhibit EX1027. Here, I provide a brief summary of my qualifications.

11. I earned my Bachelor of Science degree in Engineering and Applied Science from the California Institute of Technology (Caltech) in 1985. I received my Master of Science degree in Electrical Engineering in 1987 and my Ph.D. in Electrical Engineering in 1993, both from the University of Southern California ("USC").

12. I am a tenured Associate Professor in the Department of Electrical and Computer Engineering at USC.

13. My research interests lie at the intersection of acoustics, psychoacoustics (the science that studies human perception of sound), and audio signal processing. I have worked in the area of audio signal processing for more than 20 years with particular emphasis on spatial and 3D audio. I have published nearly 100 technical papers, including several peer-reviewed papers. I have published a book on spatial audio entitled Immersive Audio Signal Processing and hold several patents in audio processing for headphone optimization, acoustic measurement of loudspeakers in rooms, loudspeaker crossover optimization, and loudspeaker response correction using signal processing. My publications examine various aspects of sound measurement, echo cancellation, microphone arrays, noise cancellation, filter banks, how sound interacts with the acoustical elements of the environment, novel methods for surround sound recording and reproduction, and the perception of sound by human listeners.

14. A focus of my early research was on head-related transfer functions (HRTFs) and how they can be measured and modeled using various signal processing approaches. I developed several implementations of HRTF-based 3D audio for rendering spatial sounds over headphones. I have also researched microphone arrays for applications in enhanced far field voice recognition. This

includes methods for Direction of Arrival finding and beam forming from linear and circular microphone arrays. I have also investigated methods for noise removal and reverberation reduction from microphone signals.

15. In addition, over the past few years I have worked on audio signal processing methods for echo cancellation for applications in wearable devices. Previous other work includes loudspeakers and how they interact with their acoustical environment, and specifically loudspeaker transducers. In particular, I have researched the role of sound reflections, absorption, and diffusion in the performance of loudspeakers. I have also published several technical papers on acoustical measurement methods in rooms and device enclosures and developed novel signal processing algorithms for optimizing sound system performance. I have worked on methods for echo cancellation for applications in wearable devices. Other topics I have researched include multichannel audio acquisition and rendering, virtual microphones and virtual speakers, hybrid headphone-loudspeaker rendering methods, and advanced signal processing techniques for optimizing sound quality from small portable devices.

16. I am the founding Director of the USC Immersive Audio Laboratory with facilities for experimental work in room acoustics, multichannel audio, and psychoacoustics. This laboratory also serves as a unique teaching facility for my undergraduate course in Introduction to Digital Audio and my graduate course in

Immersive Audio Signal Processing. Both courses have a major acoustics component that examines the interaction of sound with the acoustical environment and the basic principles of microphones (including wireless microphones) and loudspeaker design. The graduate course was developed through a two-year grant I received from the National Science Foundation entitled "Collaborative Learning in Engineering Using Immersive Environments," and was the first of its kind to assess the impact of audio immersion in student learning. In addition to the courses I teach, I have also supervised and served on Ph.D. dissertation committees for more than 30 students.

17. From 2003-2018, I was the co-founder and Chief Technology Officer of Audyssey Laboratories, a USC spin-off company that develops and licenses audio technology to leading consumer electronics and automotive companies around the world. A major project that I led and worked on was focused on the measurement and characterization of in-ear and over ear earbuds and headphones. This work included the development of methods for measuring earbuds and headphones using a mannequin with artificial ears and, in particular, methods for testing for proper seal prior to taking acoustical measurements. It also included the use of ear canal microphones and comparisons of the in-ear microphone response with a reference microphone in the room. A database of over 500 in-ear earbuds and headphones was created using these methods. The acoustical correction filters

that were generated for each headphone were implemented as an embedded solution that could run on DSP processors in mobile devices and laptop computers.

18. I also developed audio algorithms for loudspeakers. These speakers were novel acoustical designs that used a combination of unique enclosures, passive radiators (i.e., speaker diaphragms that are driven by changes in surrounding air pressure), and audio signal processing to optimize their performance and overcome limitations that arise from small drivers and enclosures. For example, we used signal processing technologies combined with novel acoustical design to extend the bass response of small woofers and passive radiators beyond what was previously possible in small speaker enclosures. The innovations in these designs have received awards, including Popular Science's "Best of What's New."

19. In 2019, I joined Syng as the Chief Audio Scientist. Syng creates innovative products for next generation spatial audio and my role there includes research and development of audio algorithms for sound capture using microphone arrays to measure the acoustics of the room and loudspeaker beamforming for wirelessly rendering sound in various directions.

20. In April 2018 I was elected as Senior Member of the Institute of Electrical and Electronic Engineers (IEEE) in recognition of my contributions to

the field of engineering. I am also a member of the Audio Engineering Society (AES), an association for professionals in the audio industry.

21. In 2006, I received a World Technology Network Award. This organization presents awards to innovators in several areas in which technology can foster a paradigm change. My award was for innovations in immersive audio that enable new capabilities in media and journalism. Other award recipients at that event included Vice President Al Gore, Google, and SpaceX. In addition, my work has been featured in multiple news articles, including pieces by The Atlantic, the BBC World Service, the New York Times, and National Public Radio.

22. In the late 1990s and early 2000s, I was a faculty researcher and later Deputy Director of the National Science Foundation's engineering research center established at USC. I studied the fundamental and technological limitations of immersive audio and the role of acoustics on the performance of microphones and loudspeakers. In 2003, together with one of my graduate students, I received the award for Best Paper at the Institute of Electrical and Electronics Engineers ("IEEE") Conference on Signals, Systems and Computers.

IV. LEGAL UNDERSTANDING

A. My Understanding of Claim Construction

23. I have been advised and understand that claim construction is a matter of law and that the final claim construction will ultimately be determined by the

Patent Trial and Appeal Board (the "Board"). I have been advised and understand that patent claims are construed from the perspective of one of ordinary skill in the art at the time the claimed invention was made. I have further been advised and understand that, in an *inter partes* review, patent claims are to be construed according to the methodology set forth in *Phillips v. AWH Corp.*, 415 F.3d 1303 (Fed. Cir. 2005). In performing my analysis and rendering my opinions, I have interpreted claim terms by giving them the ordinary and customary meaning they would have to the POSITA reading the '693 patent as of the earliest possible priority date of July 28, 2004, and in light of its specification and file history.

B. A Person Having Ordinary Skill in the Art

19. I have been advised and understand that a POSITA is presumed to be aware of all pertinent art, thinks along conventional wisdom in the art, and is a person of ordinary creativity, not an automaton. With this understanding, based on the disclosures of the '693 patent and the assumed priority date of July 28, 2004, a POSITA would have had a Bachelor of Science degree and a Master's degree in Electrical Engineering, Computer Engineering, Physics, or a related field, as well as one to two years of academic or industry experience in mobile devices, wireless communications, or audio electronics, or comparable industry experience.

C. My Understanding of Obviousness

20. I have been advised and understand that a claimed invention is unpatentable if the differences between the invention and the prior art are such that, at the time the invention was made, the subject matter as a whole would have been obvious at the time the invention was made to a POSITA to which the subject matter pertains. This means that even if all of the requirements of the claim cannot be found in a single prior art reference that would anticipate the claim, the claim can still be invalid.

21. It is my understanding that obviousness is a question of law based on underlying factual findings: (1) the scope and content of the prior art; (2) the differences between the claims and the prior art; (3) the level of skill in the art; and (4) objective considerations of non-obviousness. I understand that for a single reference or a combination of references to render the claimed invention obvious, a POSITA must have been able to arrive at the claims by altering or combining the applied references.

22. I also understand that prior art references can be combined under several different circumstances. For example, it is my understanding that one such circumstance is when a proposed combination of prior art references results in a system that represents a predictable variation, which is achieved using prior art elements according to their established functions.

23. I also understand that when considering the obviousness of a patent claim, one should consider whether a teaching, suggestion, or motivation to combine the references exists so as to avoid impermissibly applying hindsight when considering the prior art. I understand this test should not be rigidly applied, but that the test can be important to avoiding such hindsight.

V. THE ’693 PATENT

A. Background of the ’693 Patent

24. The ’693 patent relates to wearable audio devices, such as eyeglasses, with electrical components that produce audio output customized to hearing characteristics of a user. (EX1001, 2:66-3:9.) For example, the electrical components can support signal capturing, processing, and display; and can be used to provide audio output and/or audio pick-up. (EX1001, 3:10-22.) However, as set forth herein, it is my view that the claims of the ’693 patent do not represent any patentable improvement over the prior art.

B. Priority Date

25. I understand that the application that became the ’693 patent (Appl. No. 17/873,104) was filed on July 25, 2022, and claims priority to various patent filings. My analysis herein assumes a priority date of July 28, 2004, which is the date of the earliest document to which the ’693 patent claims priority. I do not take a position here as to whether the ’693 patent is actually entitled to that priority

date. If the ’693 patent were entitled only to a priority date later than July 28, 2004, it would not change any of my analysis or opinions herein.

C. Prosecution History of the ’693 Patent

26. I understand that the prosecution of the ’693 patent was not robust, and that 76 claims were allowed by the Examiner in only eight months. (EX1002.) I understand that in the Notice of Allowance, the Examiner suggested that limitations of the claims were not met by the prior art. (EX1002, 1452-1454.) But as demonstrated herein, all limitations of the challenged claims were known in the prior art and thus cannot confer patentability.

D. Claim Construction

27. As discussed above, I understand that, during an *inter partes* review, words in a claim are given their ordinary and customary meaning, which is the meaning understood by a POSITA at the time of the alleged invention after reading the entire patent. In performing my analysis and rendering my opinions, I have interpreted claim terms by giving them the ordinary and customary meaning they would have to the POSITA reading the ’693 patent as of July 28, 2004, and in light of its specification and file history.

28. I do not believe any claim construction is necessary for the purposes of the Petition. I believe the challenged claims are unpatentable under any reasonable interpretation of the claim language.

29. I understand that in a co-pending litigation matter, Petitioner proposed claim constructions, and the court issued an oral order on April 6, 2026, construing the claims, as provided in the following table for the ’693 patent:

Term / Claims	Petitioner’s Proposed Construction in Co-Pending Litigation	Court’s Construction in April 6, 2026, Oral Order
“head-worn personal electronic apparatus” / “head-worn wearable electronic device” / “head-worn electronic personal audio apparatus”/ “head-worn electronic device” ’693 patent, claims 24-27, 30, 31, 33-38, 42, 49, 50, 52-54, 61, 64, 70-73	“electronic eyewear or headwear”	“electronic eyewear or headwear”
“[a/the] speaker[s] … proximate to an ear of the user” / “the first speaker . . . proximate to a first ear of the user” / “the second speaker … proximate to a second ear of the user” ’693 patent, claims 24, 42, 75	“[a/the] speaker[s] . . . near an ear of the user” / “the first speaker . . . near a first ear of the user” / “the second speaker . . . near a second ear of the user”	Plain and ordinary meaning

30. As set forth herein, it is my view that the grounds described herein are consistent with Petitioner's litigation constructions above, the court's constructions above, and with no express construction. That is, the claims are unpatentable regardless of whether the Board applies Petitioner's litigation constructions or the court's constructions, or declines to construe the claims.

VI. GROUND 1: CLAIMS 1-5, 14-19, 24, 25, 27, 28, 42, 59, 60, 62, 63, AND 75 ARE RENDERED OBVIOUS BY ANDERSON

A. Summary of Anderson

31. Anderson is a U.S. Patent that was filed on June 7, 1995 and issued on February 24, 1998. (EX1004.) I understand Anderson is thus prior art to the '693 patent under at least 35 U.S.C. §§102(a), (b), and (e). I understand Anderson was not cited during prosecution.

32. Anderson discloses a hearing aid that includes an earpiece and a remote processor unit (RPU) that receives signals from and transmits signals to the earpiece. (EX1004, 1:7-10.) FIG. 1 illustrates:

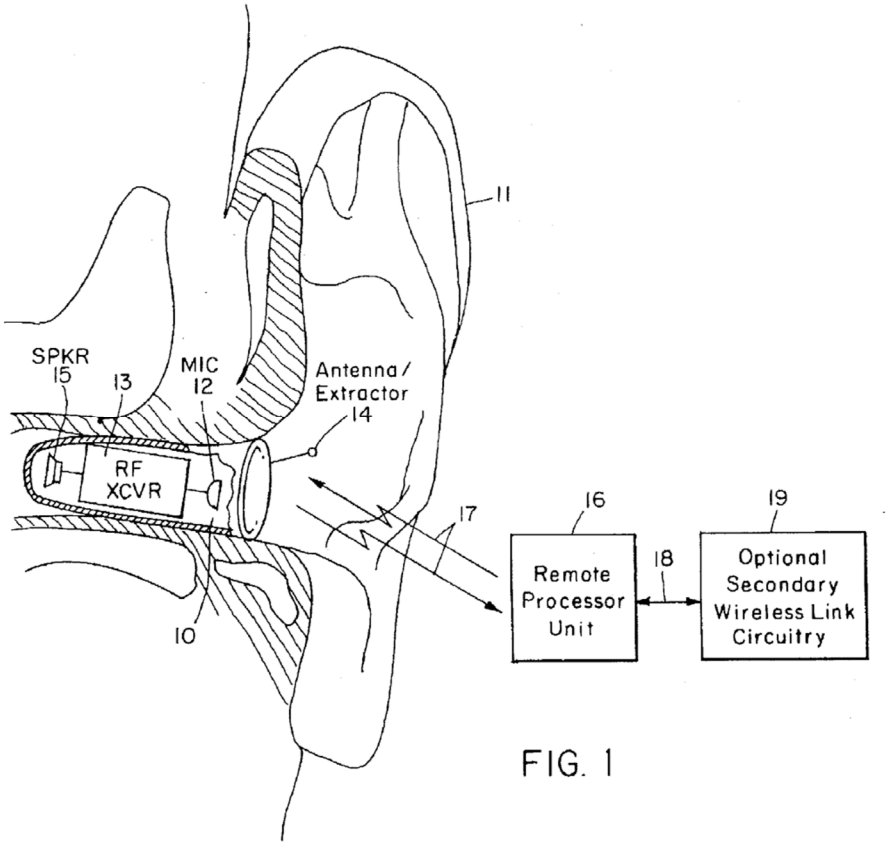

FIG. 1

(EX1004, FIG. 1.)

33. The earpiece includes a microphone, RF transceiver, and speaker, and the RPU may be worn or carried by the user and can interface with a telephone network. (EX1004, 3:58-60, 4:1-12, 5:61-6:5.)

34. Anderson discloses "many variations of the system shown in FIG. 1." (EX1004, 4:15-18.) In some embodiments, the earpiece is worn in the user's ear canal, such as shown for earpiece 10 in FIG. 1; or may utilize a behind-the-ear ("BTE") unit. (EX1004, 3:53-58.) In some embodiments, such as shown in FIG. 2, the earpiece belongs to a head-worn headset 21:

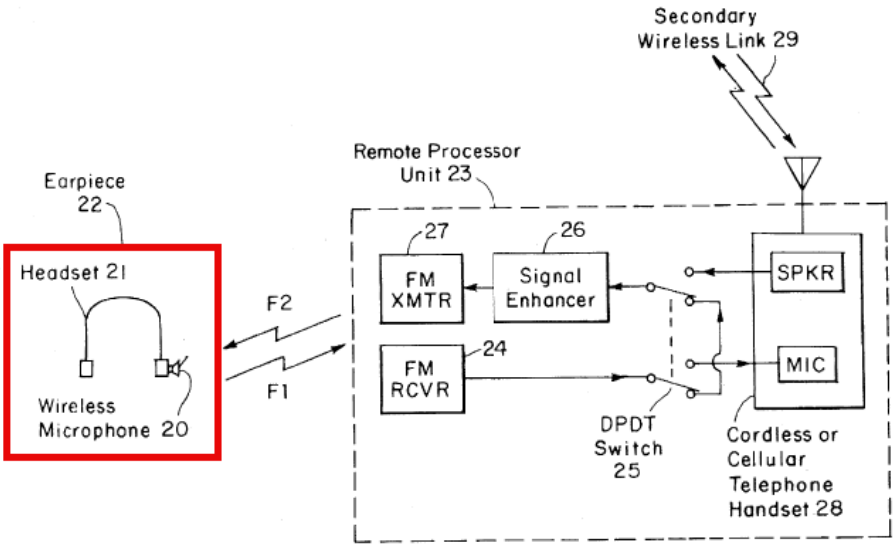

FIG. 2

(EX1004, 4:15-39, FIG. 2 (annotated).)

35. The headset earpiece 22 shown in FIG. 2 is "functionally similar" to the in-ear earpiece 10 shown in FIG. 1. (EX1004, 4:33-35.) The headset earpiece 22 can be made using commercial off-the-shelf components, such as a Radio Shack model 12-103 headset receiver:

(EX1004, 4:26-39; EX1015, 46.)

36. During operation of the hearing aid, audio signals from the environment are picked up by the microphone of the earpiece and transmitted over a two-way wireless link to the RPU. (EX1004, 1:55-59.) The RPU then enhances the audio signals, *e.g.*, by adjusting the signals to accommodate for a user's hearing impairment, and subsequently transmits the enhanced signals over the two-way wireless link to the earpiece. (EX1004, 1:61-63, 27:4-17.) The system may also support mobile telephone functionality and noise cancellation. (EX1004, 2:60-65, 23:19-26, 24:45-25:14, FIG. 2.)

37. Anderson is analogous art to the '693 patent because it is directed to the same field of endeavor: wearable devices with electrical components, including those that provide audio output. (EX1001, Abstract, 2:66-3:9; EX1004, Abstract, 1:5-2:39.) For example, Anderson relates to wearable hearing aid systems in which audio signals are presented to a user—analogous to the wearable audio devices of the '693 patent. (*See* EX1001, 2:66-9:62; EX1004, 1:5-2:39.) Similarly, by disclosing systems in which "audio signals are enhanced according to the user's needs," Anderson is reasonably pertinent to a problem faced by the '693 patent inventors—using wearable devices to provide users with "enhanced hearing." (EX1001, 2:66-3:9; EX1004, 1:55-63.)

B. Claim 1

1. [Preamble] *A personal audio system operable to at least generate customized audio output, comprising:*

38. Anderson discloses a hearing aid system with an earpiece 10 and a remote processor unit (RPU) 16 that wirelessly receives signals from the earpiece; generates custom audio "enhanced according to the user's needs" from the signals; and transmits the customized audio to the earpiece for playback to the user. (EX1004, 1:7-10, 1:50-65.) Anderson's hearing aid is a personal audio system at least because the audio playback "can only be heard by the user". (EX1004, 3:58-60, 23:11-14, FIG. 1.)

2. [A] *a pair of ear buds, each configured to be placed in an ear of a user; and*

39. Anderson's earpiece 10 can be worn "completely-in-the-canal" of the ear 11, as shown in FIG. 1:

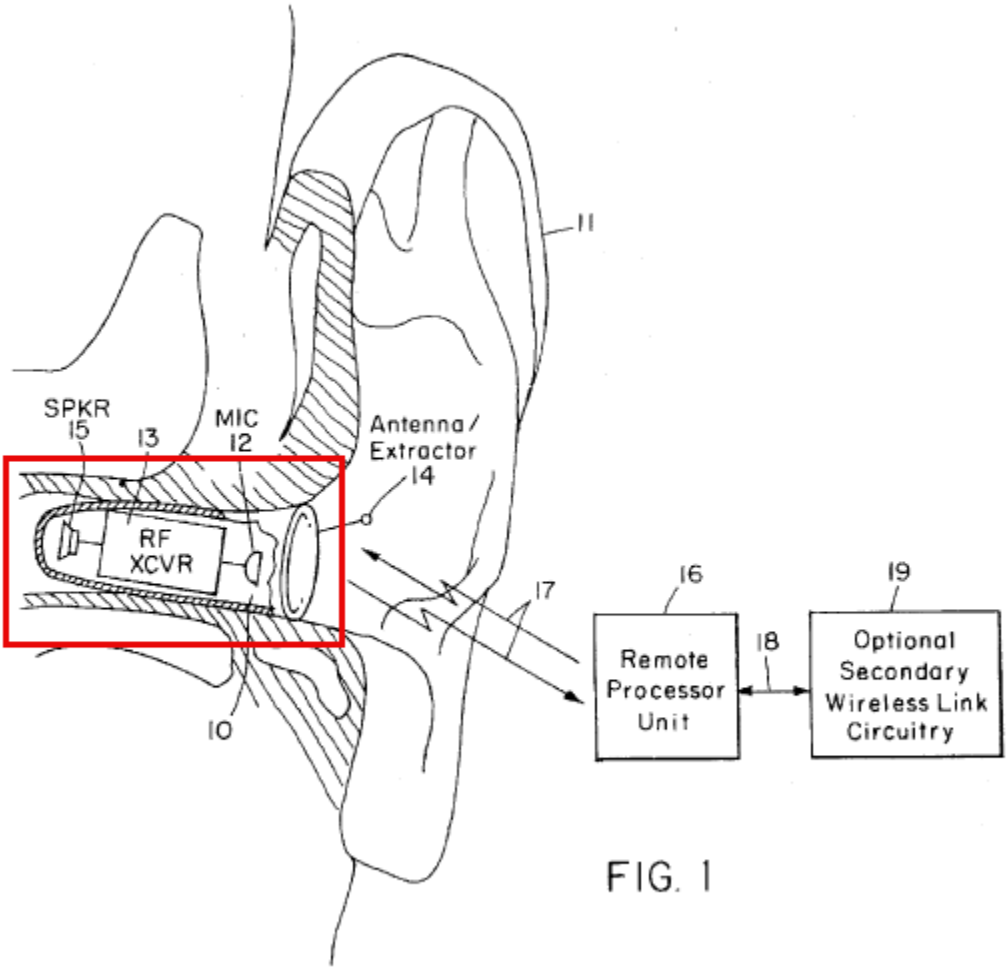

FIG. 1

(EX1004, 3:54-55, FIG. 1 (annotated).)

40. The POSITA would have understood each of these in-ear earpieces to be an ear bud.

41. In binaural embodiments, "[t]wo earpieces (one in each ear)" communicate with the RPU. (EX1004, 23:36-39.) Anderson explains, in the context of the headset embodiment of FIG. 2, that binaural embodiments are "based on the same principles" as monaural embodiments. (EX1004, 4:30-33.)

42. A POSITA would have found it obvious to implement the FIG. 1 earpieces in a binaural configuration to achieve the disclosed advantages of binaural embodiments—such as directionality and hearing protection—for in-ear devices. (EX1004, 23:36-65.) Moreover, because the FIG. 1 earpieces are "functionally similar" to those of FIG. 2, and because binaural embodiments rely on the same principles as monaural embodiments, such an implementation would have been straightforward and reasonably likely to succeed. (EX1004, 4:30-35.)

43. Accordingly, the POSITA would have understood references in Anderson to a single earpiece —whether in headset embodiments or in-ear embodiments—to apply to either or both earpieces in a binaural embodiment.

3. [B] *a mobile communication device at least for supporting audio output, the mobile communication device configured to store at least a hearing profile associated with the user, the stored hearing profile associated with the user at least characterizes hearing impairment regarding the user's ability to hear,*

44. Anderson's RPU 16 is configured to communicate with the earpieces and other devices. (EX1004, 1:7-10.) FIG. 9 illustrates the RPU:

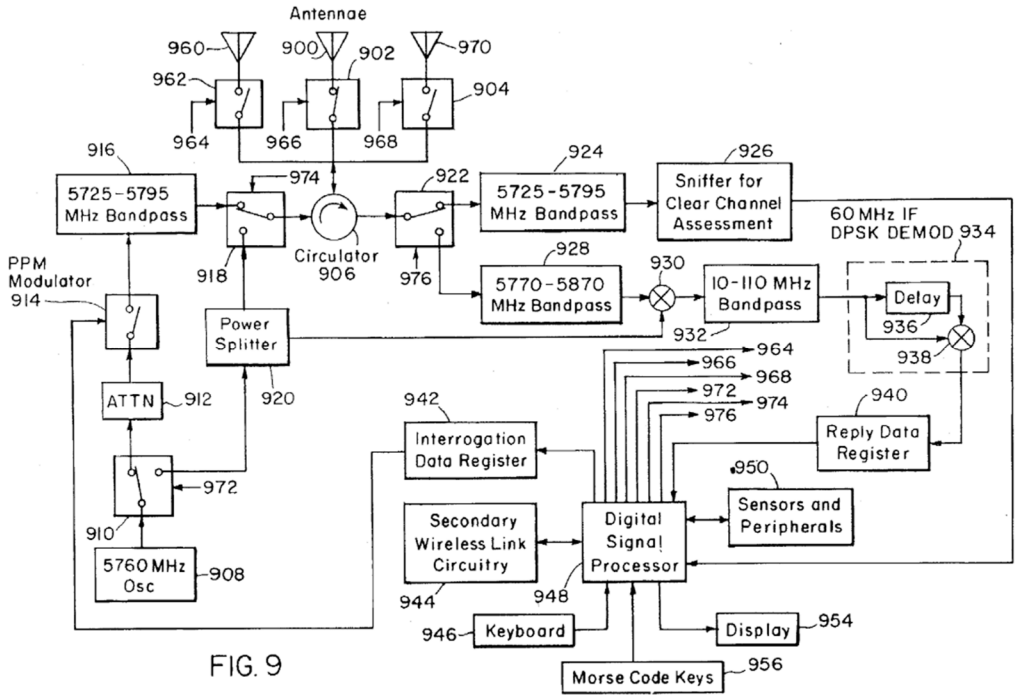

FIG. 9

(EX1004, 3:42-43, FIG. 9.)

45. The RPU 16 is a mobile communication device: it is "worn by … the user," communicates wirelessly with the earpieces, and includes secondary wireless link circuitry (944) for communication with a cellular telephone system, enabling the system to function as a virtual telephone handset. (EX1004, 1:51-55, 23:19-26, 24:45-25:14, FIG. 9.)

46. The RPU 16 communicates with the earpieces 10 to support audio output and receives audio signals from a microphone 12 located in an earpiece, as shown in FIG. 1:

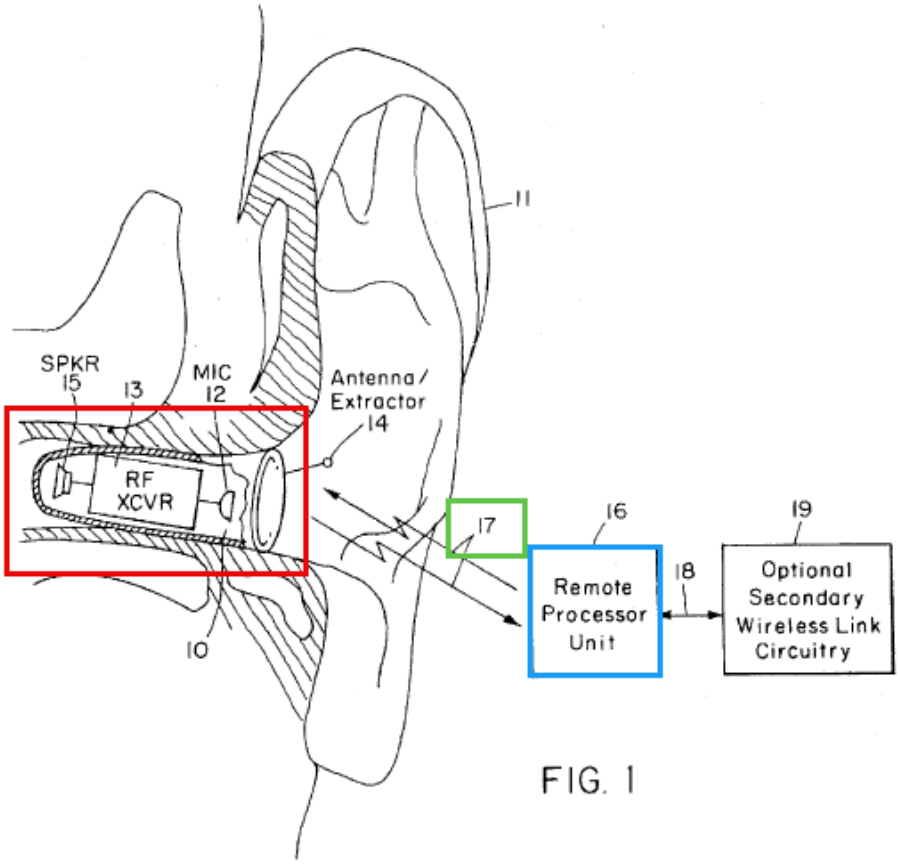

FIG. 1

(EX1004, 22:62-23:3, FIG. 1 (annotated).)

47. The RPU enhances audio signals "according to the user's needs" using a stored program that compensates for hearing loss—for example, by adjusting the pitch (frequency) of a speech signal. (EX1004, 5:11-21, 23:3-5, 23:29-31, 27:15-17, FIG. 9.) A POSITA would have understood this processing to modify speech signals based on the user's hearing impairment, *i.e.*, reduced sensitivity to particular frequencies. (EX1004, 5:15-21.)

48. Anderson further discloses identifying hearing impairment through a hearing test in which the RPU "generate[s] tones of varying frequencies and amplitudes" to "determine[] appropriate gain vs. frequency parameters" for use by the stored program. (EX1004, 27:4-24.) A POSITA would have understood these disclosures to teach that the RPU 16 stores a user-specific hearing profile based on the test results—*i.e.*, gain-versus-frequency parameters—and uses that profile to compensate for hearing loss as described above. (EX1004, 27:4-24.)

49. This is analogous to the hearing profile described in the '693 patent, which comprises digital data representing a user's "amplification across frequencies" (analogous to Anderson's gain-versus-frequency parameters) and is stored in a portable device. (EX1001, 68:62-69:52; EX1016, 314.)

4. [C] *the mobile communication device configured to produce audio output signals customized for the user based on at least the stored hearing profile associated with the user such that the customized audio output signals at least compensate for the hearing impairment regarding the user's ability to hear,*

50. As described above for element [B], Anderson's RPU uses a stored program to "compensate for the user's hearing loss." (EX1004, 27:4-24.) User-specific gain vs. frequency parameters are determined via a hearing test and stored in a hearing profile. (EX1004, 27:4-24.) The RPU's stored program applies these parameters to an audio signal to produce a user-specific output signal. In particular, the program applies frequency-dependent gain values—either increasing or

decreasing the signal at corresponding frequencies—to compensate for the user's hearing impairment at those frequencies. (EX1004, 23:29-31, 27:14-15.)

5. [D] *the mobile communication device configured to produce the customized audio output signals using at least signal amplification,*

51. Anderson's RPU produces the customized audio signals described above by providing "amplification and other forms of signal enhancement." (EX1004, 2:36-39.) The RPU processing includes applying hearing aid parameters, such as an amplification level set by the RPU DSP 948, and frequency-specific gain values to compensate for hearing loss, either of which the POSITA would have understood to include amplifying the input signal. (EX1004, 22:62-23:35.)

6. [E] *and the mobile communication device configured to transmit the customized audio output signals to the pair of ear buds,*

52. In Anderson, the customized audio output signals are "transmitted from the RPU 16 over the primary wireless link 17 to the earpiece 10, where they are converted by a speaker 15 to sounds that can only be heard by the user 11." (EX1004, 23:11-14.) In binaural embodiments, the audio output signals are "transmitted from the RPU to the left and right earpiece speakers". (EX1004, 24:10-14.)

7. [F] *wherein each of the ear buds is configured to receive at least a portion of the customized audio output signals transmitted by the mobile communication device, and*

53. See element [E]. The customized audio output signals are transmitted from the RPU to the earpieces, "where they are converted by a speaker 15 to sounds"; the POSITA would have understood that the signals must be received by the earpieces, *i.e.*, so that they can be converted by the earpieces' respective speakers. (EX1004, 23:11-14.)

8. [G] *wherein each of the ear buds is configured to generate at least a portion of the customized audio output for the user in accordance with at least the portion of the customized audio output signals being received.*

54. See elements [E] and [F]. The customized audio output signals are transmitted from the RPU to the earpieces, "where they are converted by a speaker 15 to sounds" for the user; the POSITA would thus understand the sounds to be generated by the earpieces' respective speakers in accordance with the earpieces receiving the audio output signals. (EX1004, 23:11-14.)

C. Claim 2

1. [Preamble] *A personal audio system as recited in claim 1,*

55. See claim 1.

2. [A] *wherein the mobile communication device is configured to establish the hearing profile for the user.*

56. See claim 1[B].

D. Claim 3

1. [Preamble] *A personal audio system as recited in claim 2,*

57. See claim 2.

2. [A] *wherein the hearing profile for the user is established by the mobile communication device at least via generating audio tones and outputting such to one or more of the ear buds and receiving a user indication corresponding to the user's ability to hear the generated audio tones.*

58. In Anderson's hearing test, described above with respect to claim 1[B], the RPU "generate[s] tones of varying frequencies and amplitudes" and presents them to the user via the earpiece to determine gain-versus-frequency parameters for compensating hearing loss. (EX1004, 27:4-17.)

59. Because audio playback through the earpiece "can only be heard by the user," the test necessarily relies on user feedback to determine whether the tones are audible. (EX1004, 23:11-14.) A POSITA would have understood that such hearing tests depend on the user to indicate which tones are heard, as the user is best positioned to assess the audibility of tones presented via the earpiece. (*See* EX1017, 1980 (explaining that screening a user for hearing loss includes presenting tones to a user at various frequencies and asking the user to "indicate whether he or she can hear the tone").)

E. Claim 4

1. [Preamble] *A personal audio system as recited in claim 1,*

60. See claim 1.

2. [A] *wherein the signal amplification is frequency-dependent amplification.*

61. Anderson's RPU uses a stored program to "perform[] signal enhancement to compensate for the user's hearing loss" using "appropriate gain vs. frequency parameters." (EX1004, 27:13-17.) The POSITA would have understood Anderson's gain to refer to a gain factor, indicating a level of signal amplification; and accordingly that Anderson's "gain vs. frequency parameters" for signal enhancement provide frequency-specific gain factors used to amplify specific frequencies. (EX1004, 27:4-17.)

F. Claim 5

1. [Preamble] *A personal audio system as recited in claim 1,*

62. See claim 1.

2. [A] *wherein each of the earbuds includes a speaker, and*

63. See claim 1[E].

3. [B] *wherein the at least a portion of the customized audio output being generated by each of the ear buds is generated by the corresponding speaker.*

64. See claim 1[G].

G. Claim 14

1. [Preamble] *A personal audio system as recited in claim 1,*

65. See claim 1.

2. [A] *wherein the mobile communication device is or includes a mobile phone.*

66. Anderson's RPU includes two-way wireless link circuitry 19 to "communicate with a telephone or other communication network," thereby "replac[ing] a conventional telephone handset in many applications". (EX1004, 2:49-51, 24:50-58.) The POSITA would have understood the RPU to include a mobile phone at least because it worn by, and thus moves with, the user; and includes telephone handset functionality to communicate with a telephone network. (EX1004, 1:51-55.)

H. Claim 15

1. [Preamble] *A personal audio system as recited in claim 1,*

67. See claim 1.

2. [A] *wherein the customized audio output includes music.*

68. Anderson's RPU can include a "peripheral device[]" to provide music (*e.g.*, from a compact disc) or other information to the user. (EX1004, 24:45-47, 25:51-59.) As an example, a peripheral device can provide music from, *e.g.*, a compact disc. (EX1004, 25:51-59.) The RPU combines the enhanced audio

signals described for claim 1 with other audio information, which the POSITA would have understood to include the music, and transmits this customized audio output to the earpiece. (EX1004, 23:5-14.)

I. Claim 16

1. [Preamble] *A personal audio system as recited in claim 1,*

69. See claim 1.

2. [A] *wherein the customized audio output includes a voice conversation.*

70. Anderson discloses that "speech signals from a nearby talker" are processed by the RPU to "help compensate for a user's hearing loss relative to a particular talker's voice characteristics" as described above. (EX1004, 5:3-21.) The POSITA would have understood the speech signals to include a voice conversation, *i.e.*, a conversation involving the nearby talker.

J. Claim 17

1. [Preamble] *A personal audio system as recited in claim 1,*

71. See claim 1.

2. [A] *wherein at least one of the earbuds in the pair of earbuds comprises a plurality of microphones configured for audio pickup,*

72. Anderson's earbud earpiece includes a primary microphone 12 configured to detect audio signals and transmit them to the RPU. (EX1004, 1:51-

63, 22:62-23:5.) Additionally, the earpiece includes an auxiliary microphone, housed in the same case, configured to detect audio signals from the user via bone conduction. (EX1004, 26:54-61.)

3. [B] *wherein at least one of the microphones is configured to pick up an audio command, and*

73. Anderson discloses that a user can provide voice commands, which are "received as audio signals by the earpiece 10 and transmitted to the RPU 16." (EX1004, 25:15-30.) The POSITA would have understood the audio signals to be picked up by the microphones, which are the components of the earpiece that receive audio signals. (EX1004, 5:3-6, 6:8-15, 22:62-23:5.)

4. [C] *wherein the mobile communication device is configured to induce an operation or action based on the audio command.*

74. Anderson's voice commands cause the RPU to "initiate actions" such as changing hearing aid parameter settings (*e.g.*, volume), or activating appliances or environmental controls in a distributed wireless network. (EX1004, 25:22-27.)

K. Claim 18

1. [Preamble] *A personal audio system as recited in claim 1,*

75. See claim 1.

2. [A] *wherein the customized audio output signals are produced based on amplifying or attenuating different frequency bands differently according to at least the stored hearing profile.*

76. As described for claim 1[B], Anderson's RPU "performs signal enhancement to compensate for the user's hearing loss" based on gain vs. frequency parameters that are determined based on a hearing test and stored in a hearing profile. (EX1004, 27:4-17.) The POSITA would have understood such a gain parameter to characterize an amplitude of a signal; and thus would have understood Anderson to disclose enhancing the audio signals by raising (amplifying) or lowering (attenuating) the amplitude of different frequency bands, based on their corresponding gain parameters, in accordance with the results of the user's hearing test. (EX1016, 314; EX1004, 27:4-17.)

L. Claim 19

1. [Preamble] *A personal audio system as recited in claim 1,*

77. See claim 1.

2. [A] *wherein the hearing profile associated with the user is self-determined by the user.*

78. As described for claim 3[A], Anderson's hearing test prompts the user to respond to the audio tones and thus determine the gain vs. frequency parameters of his or her hearing profile. (EX1004, 27:4-17; EX1017, 1980.)

79. Anderson discloses that the hearing test used to determine gain vs. frequency parameters for signal enhancement can be "performed via the earpiece normally worn by the user" and that "[a]ll signal generation capabilities necessary to perform hearing tests are available in the hearing aid system comprising an earpiece 10 and RPU 16." (EX1004, 27:4-9.) Further, audio playback by the earpiece "can only be heard by the user". (EX1004, 23:11-14.) The POSITA would thus understand that the user, as the only person who can hear the test's audio playback, self-determines the hearing profile by providing the responses that result in the profile's gain vs. frequency parameters. Additionally, as described for claim 3[A], the POSITA would have understood Anderson's hearing test to rely on the user's own indications of audio tone detection. (EX1017, 1980.)

M. Claim 24

1. [Preamble] *A personal audio system operable to at least generate customized audio output, comprising:*

80. See claim 1[Preamble].

2. [A] *a head-worn wearable electronic device including at least a pair of speakers, each of the speakers being configured to be wearable proximate to an ear of a user; and*

81. Anderson teaches that the earpiece may be "form[ed]" from a headset 21, as shown in FIG. 2:

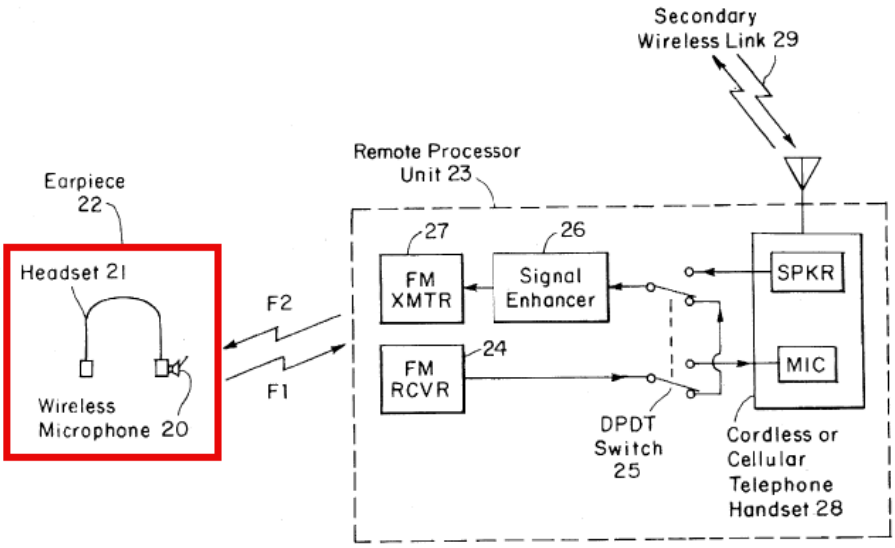

FIG. 2

(EX1004, 4:15-39, 5:52-55, FIG. 2 (annotated).)

82. The POSITA would have understood headset 21 and its earpiece 22 to be head-worn at least because FIG. 2 illustrates headset 21 (and thus earpiece 22) as including a headband that rests on the user's head for support; and because headset 21 can be a "Radio Shack (R) model 12-103" stereo headset, which similarly includes a headband, as shown below:

(EX1004, 4:26-39; EX1015, 46.)

83. The POSITA would have understood from these disclosures that Anderson's headset 21 can include a pair of speakers, one for each ear, as shown above; with each speaker wearable near (and thus proximate to) its respective ear, *i.e.*, when the headset is worn.

84. Anderson illustrates headset 21 and earpiece 22 within the context of a "limited-feature embodiment," shown in FIG. 2. (EX1004, 4:15-29.) However, the POSITA would have understood headset 21 and earpiece 22 to be combinable with the "full-featured" embodiment of FIG. 1. (EX1004, 3:52-58.) This is because Anderson characterizes FIG. 1 and FIG. 2 as showing two preferred embodiments of the same invention; explains that the headset earpiece shown in FIG. 2 is "functionally similar" to the in-ear earpiece 10 of FIG. 1; and further explains that "many other earpiece housing types" can be used in place of the CIC

earpiece housing shown in FIG. 1. (EX1004, 3:52-58, 4:15-35.) The POSITA would have understood from these disclosures that the FIG. 1 system could be flexibly implemented using various housings for the earpiece, including headset 21.

85. The POSITA would have been motivated to use the headset instead of the CIC housing to realize advantages in cost, simplicity, and commercial availability described by Anderson. Even using headset 21 in a full-featured application, it would provide certain advantages over the in-ear embodiment. Unlike some CIC housings, the headset did not need to be customized to fit in a user's ear canal. (EX1004, 4:15-5:60; EX1015, 46.) Additionally, there would have been comfort benefits: many users do not like supporting objects with their ears, a problem addressed by replacing a CIC housing with a headset. (*See* EX1011, 1:17-21.) And using a larger headset rather than a small in-ear device would make it easier and less expensive to include the processing and communication capabilities of the full-featured application, and would reduce the likelihood of misplacing the device. (EX1004, 2:36-39 (relaxing earpiece size constraints leads to a "cost-effective design"), 21:31-34.) Anderson provides specific guidance for adapting the headset using "techniques [that] are well known in the art," and notes that schematics and service manuals for the headset were

readily available, demonstrating that the POSITA would have had a reasonable expectation of success in making the combination. (EX1004, 4:26-5:60.)

86. Because the POSITA would have combined headset 21 and its earpiece 22 with the full-featured FIG. 1 embodiment, throughout this declaration, unless otherwise noted, references to the earpiece 10 shown for FIG. 1 should be understood to apply equally to earpiece 22 and headset 21.

3. [B] ***a mobile communication device at least for supporting audio output, the mobile communication device configured to store at least a hearing profile associated with the user, the stored hearing profile associated with the user at least characterizes hearing impairment regarding the user's ability to hear,***

87. See claim 1[B].

4. [C] ***the mobile communication device configured to produce audio output signals customized for the user based on at least the stored hearing profile associated with the user such that the customized audio output signals at least compensate for the hearing impairment regarding the user's ability to hear,***

88. See claim 1[C].

5. [D] ***the mobile communication device configured to produce the customized audio output signals using at least signal amplification,***

89. See claim 1[D].

6. [E] ***and the mobile communication device configured to transmit the customized audio output signals to the pair of speakers,***

90. In Anderson, enhanced audio signals are "transmitted from the RPU 16 over the primary wireless link 17 to the earpiece 10, where they are converted by a speaker 15 to sounds that can only be heard by the user 11." (EX1004, 23:8-14.) Similarly, for two-earpiece (stereo) embodiments, the audio signals are "transmitted from the RPU to the left and right earpiece speakers" for presentation to the user. (EX1004, 4:30-33, 24:10-14; EX1015, 46.)

7. [F] ***wherein each of the speakers is configured to receive at least a portion of the customized audio output signals transmitted by the mobile communication device, and***

91. See element [E].

8. [G] ***wherein each of the speakers is configured to generate at least a portion of the customized audio output for the user in accordance with at least the portion of the customized audio output signals being received.***

92. See element [E]. In Anderson's binaural embodiments, stereo audio signals are presented to both ears. (EX1004, 4:30-33.)

N. Claim 25

1. [Preamble] ***A personal audio system as recited in claim 24,***

93. See claim 24.

2. [A] ***wherein the head-worn wearable electronic device includes at least a rechargeable battery, and***

94. Anderson's earpiece includes a rechargeable battery 860, as illustrated in FIG. 8:

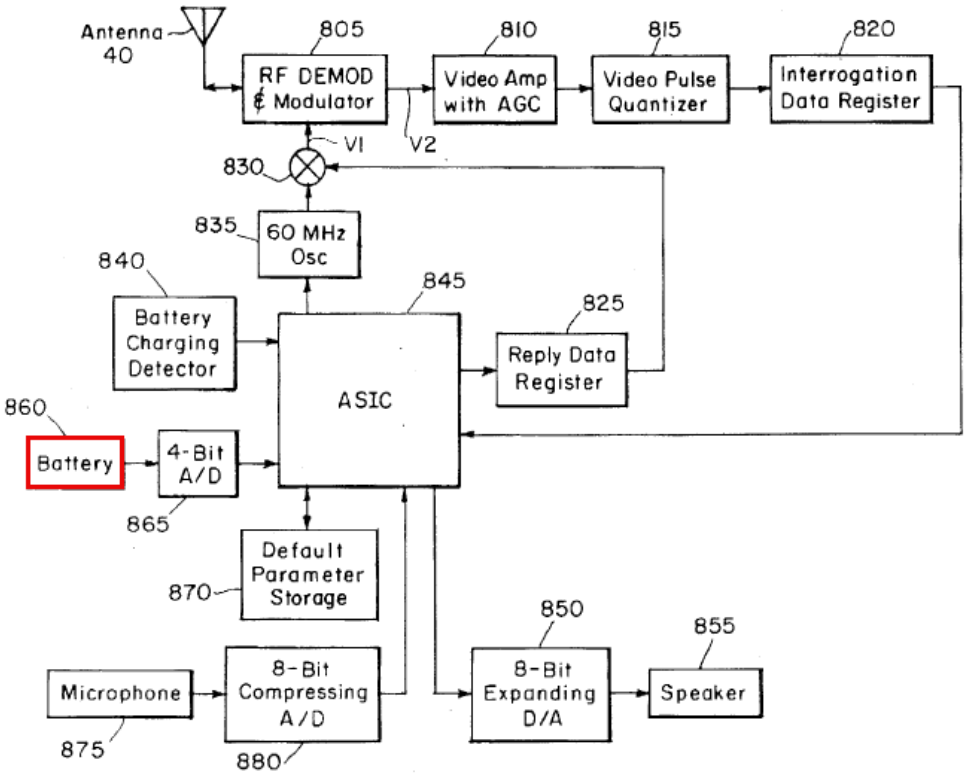

FIG. 8

(EX1004, 3:40-41, 6:55-57 ("use of a rechargeable battery is desirable"), 22:35-44, FIG. 8 (annotated).)

3. [B] *wherein the rechargeable battery is able to be charged when the head-worn wearable electronic device is coupled to a docking station.*

95. Anderson's earpiece battery can charged by placing the head-worn earpiece in "recharger/storage tray", which the POSITA would have understood to disclose coupling the earpiece to a docking station. (EX1004, 22:35-48.)

O. Claim 27

1. [Preamble] *A personal audio system as recited in claim 24,*

96. See claim 24.

2. [A] *wherein the mobile communication device is configured to wirelessly communicate with the head-worn wearable electronic device over a wireless network.*

97. See claim 1[E]. The RPU and earpiece are wirelessly networked via the two-way wireless link 17. (EX1004, 1:50-63, 4:1-4.)

P. Claim 28

1. [Preamble] *A personal audio system as recited in claim 27,*

98. See claim 27.

2. [A] *wherein the wireless network is a short-range wireless network.*

99. Anderson's wireless network is preferably implemented with operating frequencies in the 900 MHz to 6 GHz range, because of that range's "proven ability to … provide a *short-range wireless communication link*". (EX1004, 7:39-49 (emphasis added).) Similarly, in preferred embodiments, the

wirelessly networked RPU and earpiece are separated by two feet. (EX1004, 6:60-63.) Based on these disclosures, POSITA would have understood Anderson to teach a short-range wireless network.

Q. Claim 42

1. [Preamble] ***A personal audio system as recited in claim 24,***

100. See claim 24.

2. [A] ***wherein the head-worn wearable electronic device comprises: a first head-worn structure including at least a first speaker of the pair of speakers, the first speaker being wearable proximate to a first ear of the user; and***

101. See claim 24[A].

3. [B] ***a second head-worn structure including at least a second speaker of the pair of speakers, the second speaker being wearable proximate to a second ear of the user.***

102. See claim 24[A].

R. Claim 59

1. [Preamble] ***A personal audio system as recited in claim 42,***

103. See claim 42.

2. [A] *wherein the first head-worn structure comprises first electronic circuitry configured to provide audio alerts to the user via the first speaker.*

104. Anderson's earpiece includes electronic circuitry (e.g., ASIC 845) configured to provide audio signals to the user via a speaker (e.g., speaker 855). (EX1004, FIG. 8.) FIG. 8 illustrates the earpiece:

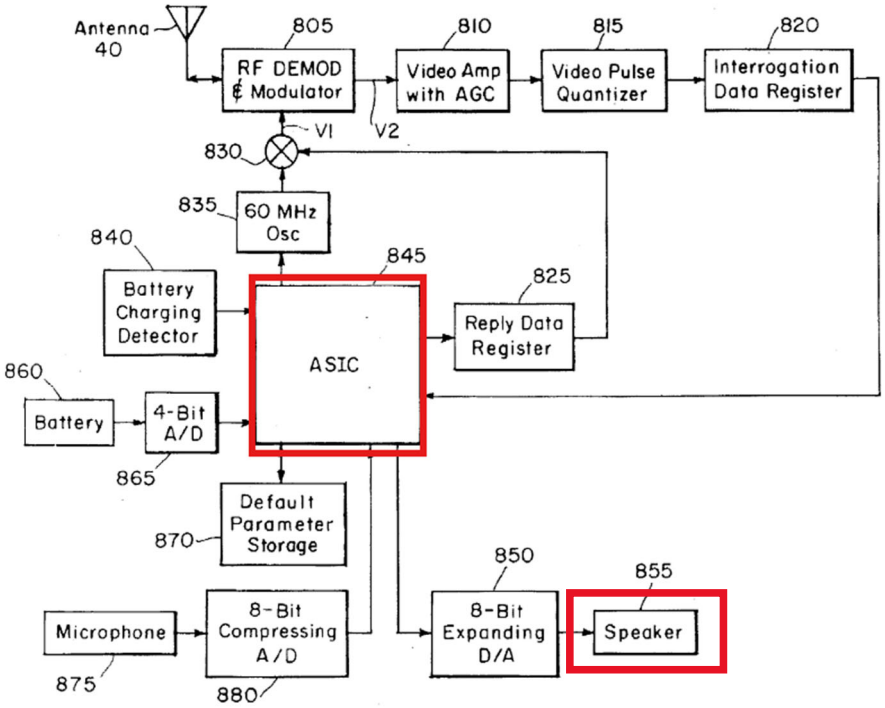

FIG. 8

(EX1004, FIG. 8 (annotated).)

105. These audio signals include audio alerts, such as "a verbal warning that an earpiece or RPU battery voltage is low." (EX1004, 24:15-22.)

S. Claim 60

1. [Preamble] *A personal audio system as recited in claim 59,*

106. See claim 59.

2. [A] *wherein the audio alerts are dependent on one or more user preference settings.*

107. Anderson discloses that the audio alerts can be "made imperceptible to a casual observer if desired." (EX1004, 24:15-20.) The POSITA thus would have understood the audio alerts to be based on a user preference setting (*i.e.*, whether the user desires the alerts to be imperceptible).

T. Claim 62

1. [Preamble] *A personal audio system as recited in claim 42,*

108. See claim 42.

2. [A] *wherein the first head-worn structure comprises: a physical condition sensor configured to acquire data pertaining to a physical condition of the user, the physical condition sensor being provided at least partially internal to the first head-worn structure.*

109. Anderson discloses that sensors 950, which are located in the earpiece, can take "[a]utomatic measurements" of heart pulse rate and body temperature. (EX1004, 24:23-25.) The POSITA would thus have understood sensors 950 to be internal to the head-worn structure and to include physical condition sensors.

U. Claim 63

1. [Preamble] *A personal audio system as recited in claim 62,*

110. See claim 62.

2. [A] *wherein the acquired data by the physical condition sensor includes data pertaining to or dependent on heart beats of the user.*

111. See claim 62[A]. Sensors 950 can measure the user's heart pulse rate, *i.e.*, heart beat rate. (EX1004, 24:23-25.)

V. Claim 75

1. [Preamble] *A personal audio system operable to at least generate customized audio output, comprising:*

112. See claim 1[Preamble].

2. [A] *a pair of speakers, each of the speakers being configured to be wearable proximate to an ear of a user; and*

113. Anderson's earpiece (and thus the earpiece's speaker) can be worn "in or at the ear". (EX1004, 1:6-10.) For example, in some embodiments, the earpiece (containing the speaker) is worn in the user's ear canal, such as shown for earpiece 10 in FIG. 1; or may utilize a behind-the-ear ("BTE") unit. (EX1004, 3:53-58.) In such BTE embodiments, the POSITA would have understood the earpiece's speaker to be positioned near (and thus proximate) to the user's ear.

3. **[B]** ***a mobile communication device at least for supporting audio output, the mobile communication device configured to store at least a hearing characteristic associated with the user, the stored hearing characteristic associated with the user at least characterizes hearing impairment regarding the user's ability to hear,***

114. See claim 1[B].

4. **[C]** ***the mobile communication device configured to produce customized audio output signals for the user based on at least the stored hearing characteristics associated with the user such that the customized audio output signals at least compensate for the hearing impairment regarding the user's ability to hear,***

115. See claim 1[C].

5. **[D]** ***the mobile communication device configured to produce the customized audio output signals using at least signal amplification, and***

116. See claim 1[D].

6. **[E]** ***the mobile communication device configured to transmit the customized audio output signals to the pair of speakers,***

117. See claim 24[E].

7. **[F]** ***wherein each of the speakers is configured to receive at least a portion of the customized audio output signals transmitted by the mobile communication device, and***

118. See claim 24[F].

8. [G] *wherein each of the speakers is configured to generate at least a portion of the customized audio output for the user in accordance with at least the portion of the customized audio output signals being received.*

119. See claim 24[G].

VII. GROUND 2: CLAIMS 6-13, 50, 61, AND 76 ARE RENDERED OBVIOUS BY ANDERSON IN VIEW OF NEMIROVSKI

A. Summary of Nemirovski

120. Nemirovski is a U.S. Patent that was filed on July 31, 2001, published on October 3, 2002, and issued on December 30, 2003. (EX1005.) I understand Nemirovski is thus prior art to the '693 patent under at least 35 U.S.C. §§102(a), (b), and (e). I understand Nemirovski was not cited during prosecution.

121. Nemirovski discloses an earset with multiple microphones for use in a communication system. FIG. 5 illustrates an embodiment:

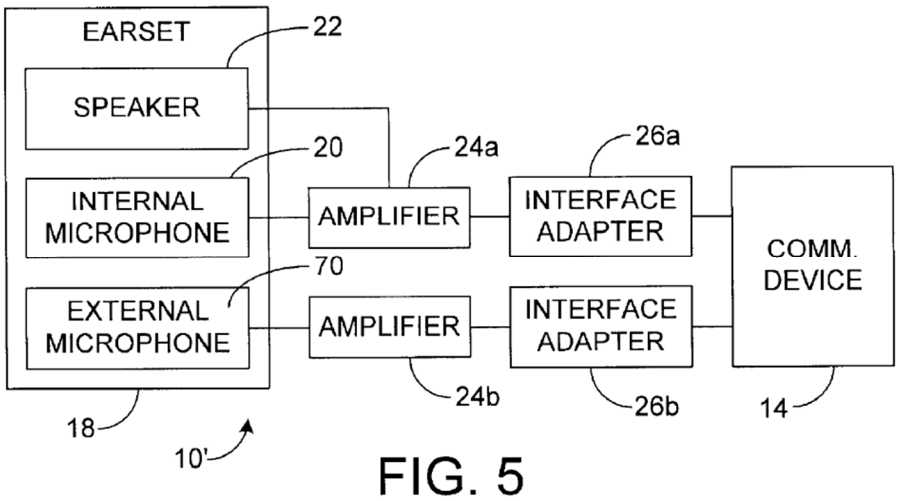

FIG. 5

(EX1005, FIG. 5.)

122. In embodiments, Nemirovski's earset can be "retained … by a headset assembly," by which the POSITA would have understood the earset to be headwear (*i.e.*, worn supported by the top of the user's head via the headset assembly). (EX1005, 6:19-22.)

123. The earset includes an internal microphone, an external microphone, and a speaker. (EX1005, 9:46-50, FIG. 5.) The microphones detect sound and generate electrical signals that may be amplified and transmitted to a communication device, which can present audio to the user via the speaker. (EX1005, 4:34-47.)

124. Nemirovski teaches that either one or two such earsets can be used, with two earsets potentially resulting in improved system performance "due to the detection of more information." (EX1005, 7:30-38.)

125. The internal microphone is oriented toward the ear canal to capture user-generated sounds (*e.g.*, speech), while the external microphone captures ambient sounds. (EX1005, 5:45-50, 6:58-64, 9:22-26, 9:54-60.) These signals can be used to distinguish user speech from external noise and to cancel externally generated noise. (EX1005, 9:19-31, 10:8-13.)

126. Nemirovski is analogous art to the '693 patent because it is directed to the same field of endeavor: wearable devices with electrical components, including those that provide audio output. (EX1001, Abstract, 2:66-3:9; EX1005, Abstract,

2:10-45.) For example, Nemirovski discloses an earset with a microphone and speaker—analogous to audio devices of the '693 patent. (*See* EX1001, 2:66-9:62; EX1005, 2:10-25.) Similarly, by disclosing that such earsets include electrical components operable to detect speech and produce a corrected microphone signal for the user, Nemirovski is reasonably pertinent to a problem faced by the '693 patent inventors— using wearable devices to provide users with "enhanced hearing." (EX1001, 2:66-3:9; EX1005, 2:10-45.)

B. Motivation to Combine with Reasonable Expectation of Success

127. The POSITA would have been motivated to combine Anderson with Nemirovski with a reasonable expectation of success. Anderson discloses hearing aid earpieces compatible with multiple microphones, including a body-worn microphone used to detect background noise and adjust parameters such as volume amplification. (EX1004, 7:10-13, 22:27-33, 23:26-31.)

128. The POSITA would have sought this combination to address shortcomings in Anderson. First, Anderson acknowledges drawbacks of body-worn microphones, including susceptibility to wind and clothing noise, failure to track head movement, and incompatibility with stand-alone operation. (EX1004, 22:20-27.) Anderson suggests relocating the body-worn microphone to the earpiece to address these issues, but does not describe how to do so while preserving background-noise detection. (EX1004, 22:20-27.)

129. Second, Anderson's earpieces include microphones for voice and cellular functionality, including speech detection for cell phone dialing and communication, but environmental noise can degrade speech signals. (EX1004, 23:14-35, 24:45-25:50, 26:57-61, FIG. 1, FIG. 9.) Although Anderson acknowledges this environmental noise problem, its proposed solutions (bone conduction and multiple single-microphone earpieces) have drawbacks or are incompletely described. (EX1004, 26:54-57.) For example, as the POSITA would have recognized, bone conduction provides "suboptimal sound transmission" to the ear; and requiring multiple earpieces instead of one may be unsuitable for some applications (*e.g.*, while driving). (EX1004, 26:54-61; EX1018, 2.) For situations in which multiple earpieces may be practical, Anderson does not provide implementation detail, including how its earpieces in such embodiments would accommodate multiple "air path" microphones. (EX1004, 26:54-27:3.) Anderson instead invites its combination with other systems, by suggesting that distinguishing environmental noise can be performed "using any of a number of techniques and circuits well known in the art". (EX1004, 23:65-24:1.)

130. Accordingly, the POSITA would have been motivated to combine Anderson with Nemirovski to address these problems. Nemirovski provides a solution by disclosing earpieces with internal and external microphones for detecting user speech and environmental noise, along with techniques for

separating and canceling noise. (EX1005, 5:45-50, 6:58-64, 9:19-31, 9:54-60, 10:8-13.) The POSITA would have been motivated to apply this microphone arrangement to Anderson's single or multiple-earpiece teachings to realize the benefits described in Nemirovski, such as improved signal processing, and enabling the user to engage in other activities while speaking, without the drawbacks of bone conduction. (EX1005, 3:6-44, 10:8-11:6.)

131. Although Anderson notes differences between hearing aids and telephone handsets, a POSITA would still have combined Nemirovski because Anderson includes analogous voice and cellular functionality and would benefit from Nemirovski's noise-reduction techniques. (EX1004, 2:7-16.)

132. The POSITA would have had a reasonable expectation of success in combining the teachings of Anderson and Nemirovski. For example, Anderson and Nemirovski each disclose analogous devices that support audio output in use with a communication system. (EX1004, 1:6-10, 3:52-4:14; EX1005, 3:6-9.) The devices share various analogous and familiar components used in conventional ways, such as microphones for detecting speech, speakers for presenting audio signals, and amplifier circuits for signal processing. (EX1004, 3:58-60, FIG. 1, FIG. 8; EX1005, 9:45-50, FIG. 5.) And Nemirovski provides implementation detail, such as specific signal processing methods for detecting speech, to guide its combination with systems such as Anderson. (EX1005, 10:27-11:6.) Accordingly,

the combination would have applied known techniques and components to yield predictable results.

C. Claim 6

1. [Preamble] *A personal audio system as recited in claim 1,*

133. See claim 1.

2. [A] *wherein at least one of the earbuds in the pair of earbuds comprises an array of microphones configured for directional audio pickup.*

134. Anderson discloses an earbud having a primary microphone 12, as shown in FIG. 1:

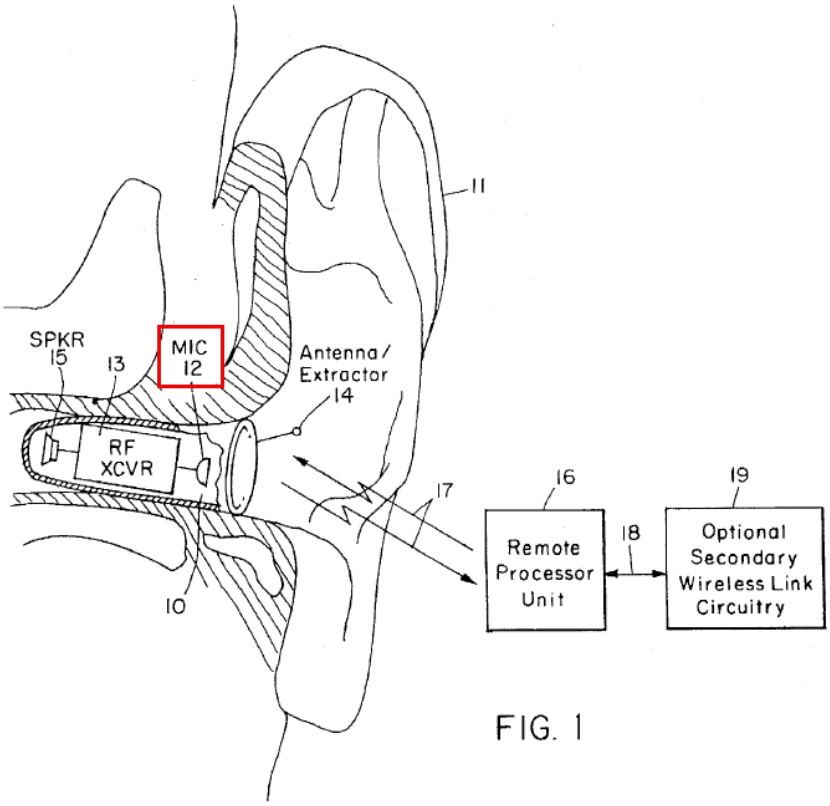

FIG. 1

(EX1004, 22:62-23:5, 23:36-39, 25:29-30, 26:54-27:3, FIG. 1 (annotated).)

135. Nemirovski discloses an earset having an internal microphone and an external microphone. (EX1005, 9:46-50, FIG. 5.) As described above, the POSITA would have combined Anderson's earpiece with Nemirovski's multiple microphone teachings to improve speech detection and noise cancellation. Nemirovski's internal microphone is "directed towards the ear canal of the user and detects sounds emanating or coming out of the ear (or air pressure changes occurring within the ear) to accurately and reliably detect the speech of the user." (EX1005, 3:15-18.) The external microphone "generally points away from the person wearing the earset" and detects air pressure changes outside of the ear that result from "externally generated noise (other people's speech, environmental noise, etc.)" as well as "the speech of the person wearing the earset." (EX1005, 9:53-58.) Thus, in the combination, a first microphone (the internal microphone) picks up audio from a user and a second microphone (the external microphone) picks up audio generated outward away from the user.

136. The POSITA would have understood this array of microphones, as well as each of the individual microphones, to be configured for directional audio pickup based on their placement. Nemirovski teaches that the internal microphone is directed toward the ear canal to detect user-generated sounds while being shielded from external noise, whereas the external microphone is oriented away

from the user to detect environmental sounds. (EX1005, 9:19-35.) Although the microphones themselves may be omnidirectional, the microphones are *configured* for directional audio pickup by their positions relative to the ear and the apparatus. (EX1005, 3:34-36, 7:13-14, 9:43-44.) For example, the internal microphone is "shielded from environmental noise" by the housing and the user's head, which directionally blocks external sound, while the external microphone directionally detects ambient sound outside the ear "[a]s a result" of its outward orientation. (EX1005, 7:8-14, 9:51-55.)

D. Claim 7

1. [Preamble] *A personal audio system as recited in claim 6,*

137. See claim 6.

2. [A] *wherein direction of the directional audio pickup is in front of the user.*

138. The external microphone of the array is oriented away from the ear canal to directionally detect sounds in the external environment, including the user's voice, as described for claim 6[A]. (EX1004, 5:3-6, 6:8-15, 25:29-30.) The POSITA would have understood this directional audio pickup to include a direction in front of the user. As Anderson discloses, and as the POSITA would have recognized, the pinnae (external cartilage) of the ear provide shielding from sources behind the user, such that sources in front of the user are unshielded and

thus more strongly detected. (EX1004, 20:6-8.) Though Anderson describes this shielding principle with respect to the earpiece's antenna, the POSITA would have understood that Anderson's microphone 12 (co-located in the ear with the antenna) is subject to analogous directional shielding of audio signals. (EX1004, 3:53-60, FIG. 1.) This directionality is consistent with Anderson's detection of speech signals, including for the user's own speech, which are generally emitted in front of the user. (EX1004, 5:3-21.)

E. Claim 8

1. [Preamble] *A personal audio system as recited in claim 6,*

139. See claim 6.

2. [A] *wherein direction of the directional audio pickup is outward from the user.*

140. See claim 6[A]; the external microphone is oriented outward to directionally detects ambient sound outside the ear. (EX1005, 7:8-14, 9:51-55.)

F. Claim 9

1. [Preamble] *A personal audio system as recited in claim 1,*

141. See claim 1.

2. [A] *wherein at least one of the earbuds in the pair of earbuds comprises a plurality of microphones configured for audio pickup.*

142. See claim 6[A].

G. Claim 10

1. [Preamble] *A personal audio system as recited in claim 9,*

143. See claim 9.

2. [A] *wherein the plurality of microphones includes at least: a first microphone configured to receive audio pickup from the user; and*

144. See claim 6[A], *i.e.*, the internal microphone.

3. [B] *a second microphone configured to receive audio pickup outward away from the user.*

145. See claim 6[A], *i.e.*, the external microphone.

H. Claim 11

1. [Preamble] *A personal audio system as recited in claim 10,*

146. See claim 10.

2. [A] *wherein the audio pickup from at least the second microphone is used at least for noise cancelation.*

147. Nemirovski teaches using the unique signals generated by the internal microphone 20 and the external microphone 70 "to distinguish between user produced speech and externally produced sounds." (EX1005, 10:8-26.) This process can "cancel externally generated noise," detected by the external microphone, from the "detections of the internal microphone 20" to produce a "relatively noise-free speech signal." (EX1005, 10:8-26.)

I. Claim 12

1. [Preamble] *A personal audio system as recited in claim 11,*

148. See claim 11.

2. [A] *wherein at least a portion of the audio pickup from the second microphone is subtracted from the audio pickup from the first microphone.*

149. Nemirovski teaches "cancel[ing] externally generated noise from the detections of the internal microphone 20" to produce a "relatively noise-free speech signal." (EX1005, 10:8-26, 10:48-58.) For example, in the below linear system, the internal and external microphone audio signals (Y_I and Y_E, respectively) each include a sound component S (user speech) and a noise component N (ambient noise such as from passing vehicles and machinery) picked up by the microphones:

$$F_{MI} * S + F_{MI} * N = Y_I \qquad \text{(Eq. 1)}$$

$$F_{ME} * S + F_{ME} * N = Y_E \qquad \text{(Eq. 2)}$$

(EX1005, 10:28-47.)

150. The terms F_{MI} and F_{ME} represent the impulse responses of the internal and external microphones, respectively. (EX1005, 10:30-34.) The linear system is solved for the speech component S and the ambient noise component N, such that the noise component (*e.g.*, including a portion of the audio detected by the external microphone) can be subtracted from the microphone signals (*e.g.*, including audio

detected by the internal microphone), thus isolating the speech component. (EX1005, 10:20-26.)

J. Claim 13

1. [Preamble] *A personal audio system as recited in claim 12,*

151. See claim 12.

2. [A] *wherein each of the ear buds includes at least a speaker and is configured to generate at least a portion of the customized audio output for the user via the speaker.*

152. This element is met by Anderson in view of Nemirovski. For example, Anderson discloses that enhanced audio signals received from the RPU are transmitted to the earpiece, "where they are converted by a speaker 15 to sounds that can only be heard by the user 11." (EX1004, 23:11-14.)

K. Claim 50

1. [Preamble] *A personal audio system as recited in claim 42,*

153. See claim 42.

2. [A] *wherein the first head-worn structure of the head-worn wearable electronic device comprises: a first microphone configured to pick up at least audio input from at least the user, the first microphone being at least partially in the first head-worn structure and is positioned to be directed towards the user when the first head-worn structure is being worn by the user; and*

154. As described above, the POSITA would have incorporated Nemirovski's microphone teachings into Anderson's head-worn structure, such

that the earpiece includes analogous microphones to improve speech detection and noise cancellation.

155. In the combination, as taught by Nemirovski, an internal microphone detects "sounds emanating or coming out of the ear (or air pressure changes occurring within the ear) to accurately and reliably detect the speech of the user." (EX1005, 3:6-23.) FIG. 5 illustrates:

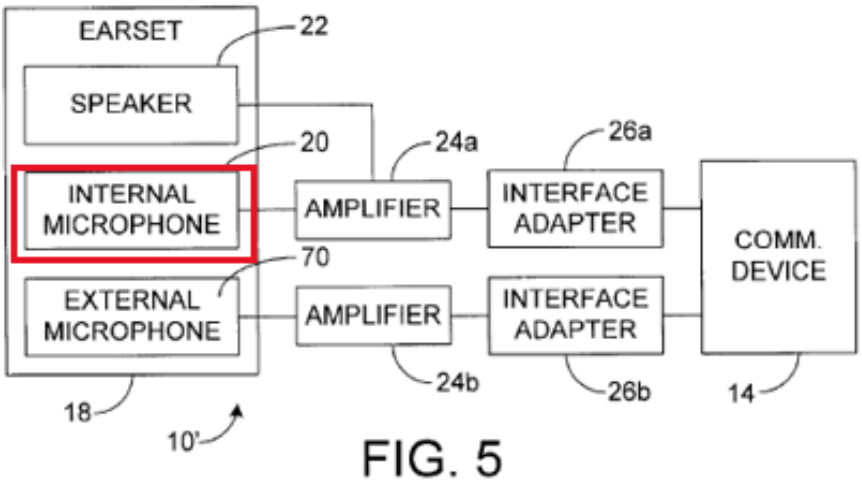

FIG. 5

(EX1005, 9:46-50, FIG. 5 (annotated).)

156. Similarly, Anderson teaches detecting speech for voice commands and mobile telephone functionality, including communication with a cellular phone system. (EX1004, 23:19-26, 24:45-25:50, FIG. 1, FIG. 2.)

157. The internal microphone is disposed on an interior portion of a housing of the earset, and is "directed towards the ear canal of the user and detects sounds emanating or coming out of the ear (or air pressure changes occurring

within the ear) to accurately and reliably detect the speech of the user." (EX1005, 3:15-18, 6:36-37, 9:46-50, FIG. 5.) The POSITA thus would have understood the internal microphone, as combined with the head-worn structure of Anderson, to be at least partially in the structure and directed toward the user when the structure is worn, so as to pick up audio input from the user.

3. [B] ***a second microphone configured to pick up at least ambient sound input associated with an environment in the vicinity of the first head-worn structure, the second microphone being positioned to be directed away from the user when the head-worn wearable electronic device is being worn by the user.***

158. In the combination, as taught by Nemirovski, an external microphone "points away from the person wearing the earset." (EX1005, 9:46-53, FIG. 5.) FIG. 5 illustrates:

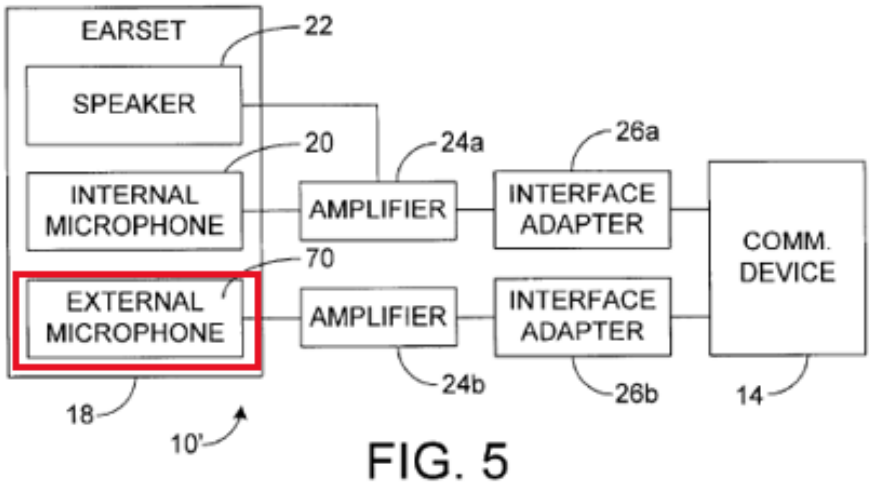

FIG. 5

(EX1005, 9:46-50, FIG. 5 (annotated).)

159. The external microphone detects air pressure changes outside of the ear that result from "externally generated noise (other people's speech, environmental noise, etc.)"—that is, ambient sound from the environment in the vicinity of the wearer. (EX1005, 9:53-58.)

L. Claim 61

1. [Preamble] ***A personal audio system as recited in claim 42,***

160. See claim 42.

2. [A] ***wherein the first head-worn structure of the head-worn wearable electronic device comprises: a first microphone configured to pick up at least audio input from at least the user, the first microphone being at least partially in the first head-worn structure; and***

161. See claim 50[A].

3. [B] ***a second microphone configured to pick up at least ambient sound input associated with an environment in the vicinity of the first head-worn structure,***

162. See claim 50[B].

4. [C] ***wherein the second microphone is positioned to be further away from mouth of the user than the first microphone when at least the first head-worn structure of the head-worn wearable electronic device is being worn.***

163. Nemirovski's external microphone 70 is disposed on an "exterior portion 72 of the housing 30" of the apparatus, while the internal microphone 20 is disposed on an "interior portion 32 of the housing 30" that is configured to be

inserted into the ear (e.g., into the concha or ear canal). (EX1005, 6:36-49, 9:33-35.) FIG. 3 illustrates:

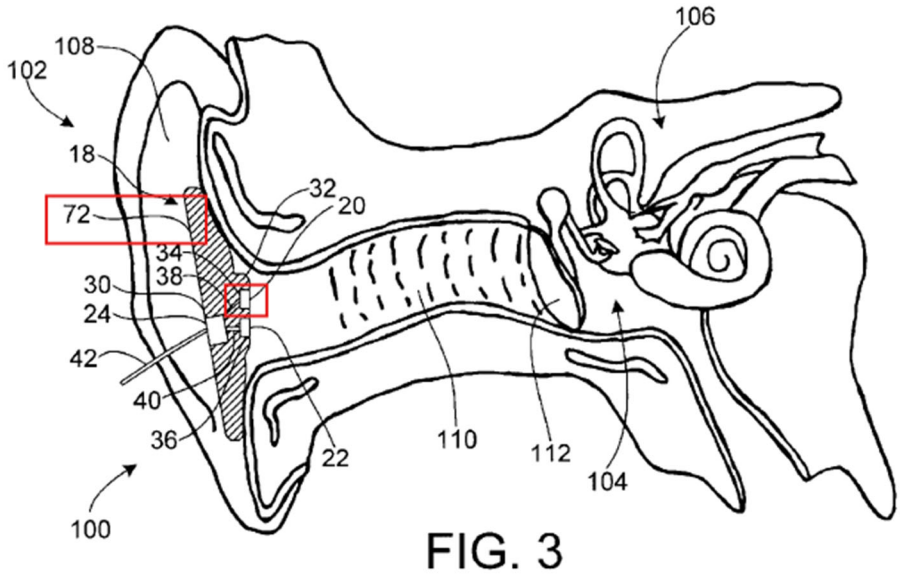

FIG. 3

(EX1005, FIG. 3 (annotated).)

164. FIG. 3, illustrating the user's ear, shows that exterior portion 72 (and thus external microphone 70) is disposed further than interior portion 32 (and internal microphone 20) from the user's mouth. As the POSITA would have understood, this placement is a consequence of the microphones' different purposes: the internal microphone is closer to the mouth, to better detect speech while remaining insulated from external sounds; conversely, the external microphone is further from the mouth, to better detect such external sounds. (EX1005, 6:30-35, 9:19-31.)

M. Claim 76

1. [Preamble] *A personal audio system as recited in claim 75,*

165. See claim 75.

2. [A] *wherein each of the speakers being configured to be at least partially inserted into an ear of the user.*

166. Anderson discloses that the earpieces (and thus their respective speakers) can be worn "completely-in-the-canal" and thus inserted into the user's ears. (EX1004, 1:6-10, 3:53-58.)

VIII. GROUND 3: CLAIMS 20-22 AND 29 ARE RENDERED OBVIOUS BY ANDERSON IN VIEW OF EATON

A. Summary of Eaton

167. Eaton is the July 26, 2001, publication of a PCT application that was filed on January 18, 2001. (EX1006.) I understand Eaton is thus prior art to the '693 patent under at least 35 U.S.C. §§102(a) and (b). I understand Eaton was not cited during prosecution.

168. Eaton discloses a hearing aid system and a mobile device adapted to program it. (EX1006, 2:28-30.) FIG. 6 illustrates an embodiment:

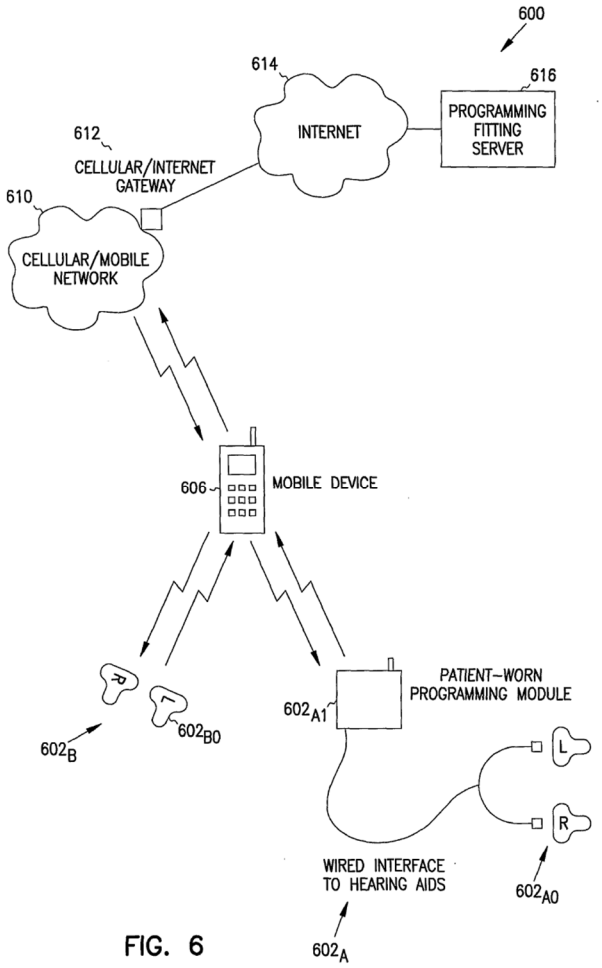

FIG. 6

(EX1006, FIG. 6.)

169. The hearing aid system can be configured to communicate with a mobile device. (EX1006, 6:31-33, 11:9-15, FIG. 6.) To fit a patient with the hearing aid system, "a piece of software may be executed on the mobile device 606 to interact with the patient wearing the hearing aid system 602B." (EX1006, 11:17-19.) Audio test signals are sent from the software executing on the mobile device 606 to the hearing aid system 602B. (EX1006, 11:19-21.) Aural responses from the patient are formatted into an audiogram that profiles "the extent of the

hearing loss of the patient," and the audiogram is used to determine audiological parameters from the aural responses. (EX1006, 11:21-31.) The parameters can then be used to program the hearing aid for tailored audiological therapy. (EX1006, 2:15-20, 11:30-33.)

170. Eaton is analogous art to the '693 patent because it is directed to the same field of endeavor: wearable devices with electrical components, including those that provide audio output. (EX1001, Abstract, 2:66-3:9; EX1006, Abstract, 2:10-45.) For example, Eaton discloses hearing aid devices, including for integration into headsets or eyeglasses—analogous to devices of the '693 patent. (*See* EX1001, 2:66-9:62; EX1006, 2:7-33, 6:8-10.) Similarly, by determining a user's audiological parameters so that the hearing aids can provide tailored therapy, Eaton is reasonably pertinent to a problem faced by the '693 patent inventors— using wearable devices to provide users with "enhanced hearing" ability. (EX1001, 2:66-3:9; EX1006, 2:15-20, 11:30-33.)

B. Motivation to Combine with Reasonable Expectation of Success

171. The POSITA would have been motivated to combine Anderson with Eaton with a reasonable expectation of success. Anderson discloses that the RPU of its hearing aid system executes a software-based hearing test for determining signal enhancement parameters, to compensate for a user's hearing impairment; but Anderson omits details of how the user interacts with the software to take the

test. (EX1004, 27:4-24.) The POSITA applying Anderson's teachings thus would have looked to combine them with Eaton, which discloses an analogous software-based test for hearing aid systems, and includes implementation detail (*e.g.*, user interfaces) not expressly provided in Anderson. (EX1006, 11:16-33.) Eaton's benefits, such as simplified operation, would have further motivated the POSITA. (EX1006, 5:1-19.)

172. Eaton's hearing aid software would have been readily combinable with Anderson's hearing aid system. Anderson and Eaton both disclose analogous and well understood components, *e.g.*, hearing aid devices with speakers that connect wirelessly to mobile communication devices with DSPs that execute hearing test software. (EX1004, 1:6-10, 3:58-60, FIG. 1, FIG. 8; EX1006, 5:20-6:25, 11:6-15, FIG. 6.) And Eaton provides specific guidance, including flow charts and data structure diagrams, to guide the implementation. (EX1006, 10:16-12:5; FIGS. 2-5.) Combining the references thus would have involved combining known components to yield predictable results.

C. Claim 20

1. [Preamble] *A personal audio system as recited in claim 1,*

173. See claim 1.

2. [A] *wherein the mobile communication device includes computing capabilities and a storage device, the storage device storing at least a software program executed by the mobile communication device to enable the user to establish the hearing profile associated with the user, and*

174. See claim 1[B]. Anderson's hearing test program is loaded into the RPU's DSP 948 and executed by the DSP to establish the user's hearing profile. (EX1004, 2:46-47, 27:4-17.) The program is stored in a memory (a storage device) of the DSP 948. (EX1004, 27:13-20.)

3. [B] *wherein the mobile communication device is configured to establish the hearing profile associated with the user via the software program executed by the mobile communication device based on the user interacting with the software program via the mobile communication device.*

175. Anderson's hearing test program is executed by the RPU's DSP 948 as described above. Eaton teaches that the user interacts with the hearing test program to profile the extent of the user's hearing loss. (EX1006, 11:17-31.) The POSITA would have combined these teachings of Eaton with Anderson's hearing test as described above.

D. Claim 21

1. [Preamble] *A personal audio system as recited in claim 20,*

176. See claim 20.

2. [A] *wherein the software program at least interactively guides the user to establish the hearing profile for the user.*

177. See claim 20[B]. In the combination, the hearing test program interacts with the user by sending audio test signals to the user's hearing aid and receiving aural responses from the user, as taught by Eaton. (EX1006, 11:16-33.) The hearing test results are used to establish the user's hearing profile as described for claim 1[B]. (EX1004, 27:4-24; *see* EX1006, 11:16-33.)

E. Claim 22

1. [Preamble] *A personal audio system as recited in claim 21,*

178. See claim 21.

2. [A] *wherein the software program at least interactively guides the user to establish the hearing profile for the user by at least causing various audio tones to be output to the user via at least one of the earbuds, prompting the user to provide a hearing input with respect to one or more of the various audio tones being output, and receiving the hearing user input pertaining to one or more of the various audio tones being output.*

179. See claim 21[A]. Anderson's hearing test program generates tones of varying frequencies and amplitudes that are converted to acoustic waves by the earpiece. (EX1004, 27:9-13.) In the combination, as described for claim 21[A], the program guides the user to interactively respond to the tones, *i.e.*, via aural input, to establish the hearing profile. (EX1004, 27:4-24; EX1006, 11:17-24.)

F. Claim 29

1. [Preamble] *A personal audio system as recited in claim 27,*

180. See claim 27.

2. [A] *wherein the short-range wireless network is a Bluetooth network.*

181. Anderson's RPU and earpiece are wirelessly networked via two-way wireless link 17. (EX1004, 1:50-63, 4:1-4.) Eaton teaches that in the combination, the network may be a Bluetooth network, which "provides a short-range, low-cost radio communication link." (EX1006, 6:17-19.) The POSITA would have understood Bluetooth to be a suitable technology for the short distances (*e.g.*, two feet) preferred by Anderson. (EX1004, 6:60-63.)

IX. GROUND 4: CLAIMS 23, 30, 36-38, AND 54-58 ARE RENDERED OBVIOUS BY ANDERSON IN VIEW OF IRVIN

A. Summary of Irvin

182. Irvin is a U.S. patent that was filed on Feb. 21, 2000, and issued on March 7, 2006. (EX1007.) I understand Irvin is thus prior art to the '693 patent under at least 35 U.S.C. §§102(a) and (e).

183. Irvin discloses wireless headsets with "automatic on/off capabilities to maximize battery life," such as headset 100 shown in FIG. 1:

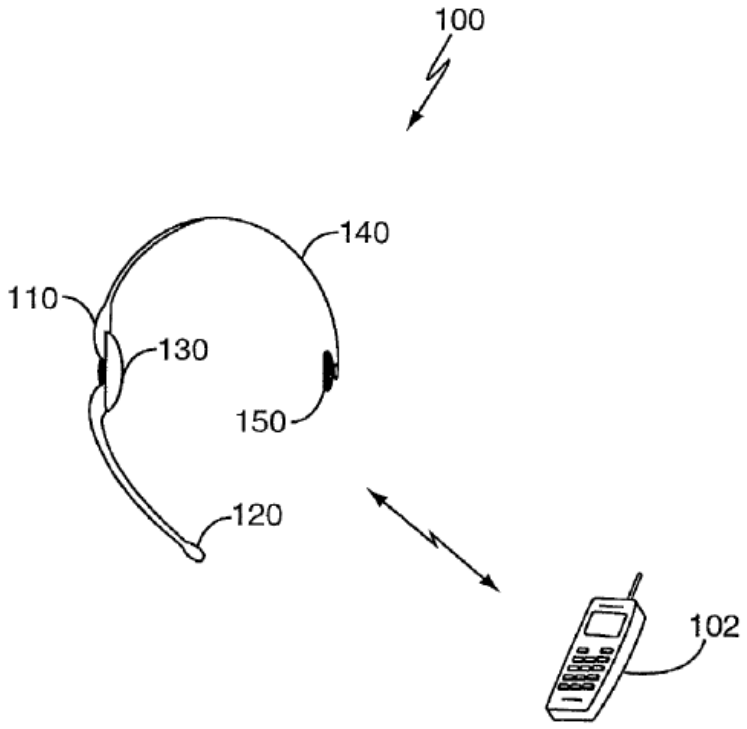

FIG. 1

(EX1007, Abstract, 1:13-51, FIG. 1.)

184. Irvin's headset is head-worn: it is "secur[ed] … to the user's head," *e.g.*, via a retaining member, and automatically transitions between inactive, sleep, and active states depending on whether it is being worn. (EX1007, Abstract, 2:16-51, 3:35-39, 8:11-50, 9:40-43.) A communications circuit 230 provides wireless and audio interfaces that are selectively enabled or disabled by a power control

circuit 210 depending on the device state. (EX1007, 3:28-4:10, 8:11-9:39, FIG. 2A.) FIG. 2A illustrates:

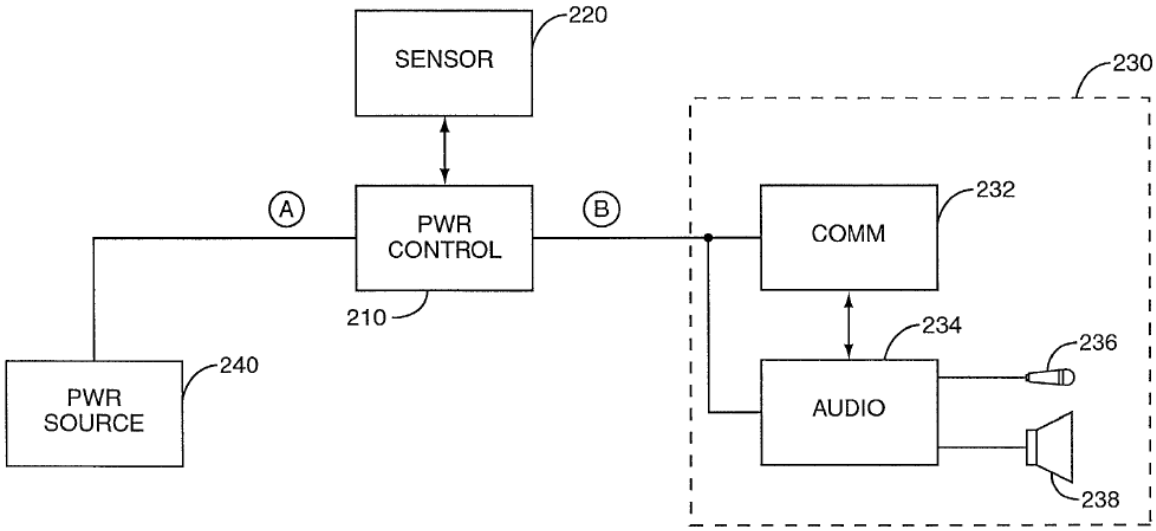

FIG. 2A

(EX1007, FIG. 2A.)

185. Transitions between the states are controlled by a sensor 220 (*e.g.*, a contact sensor or proximity sensor), which detects when the user is wearing the headset. (EX1007, Abstract, 2:16-51, 5:1-6:67, 8:11-50.) Figures 4C and 4D illustrate sensor 220 embodiments:

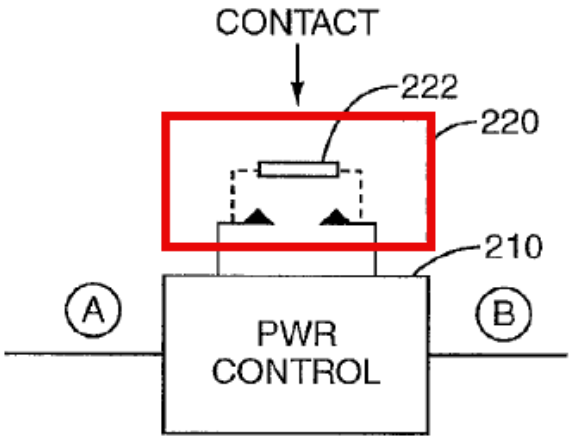

FIG. 4C

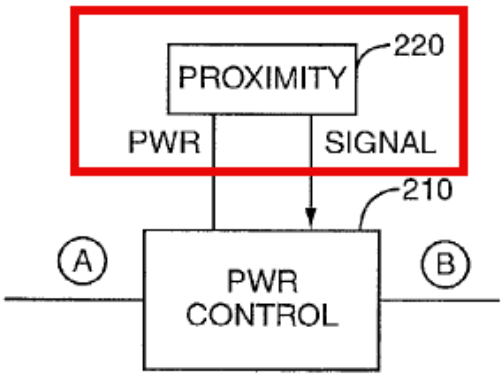

FIG. 4D

(EX1007, FIG. 4C (annotated), FIG. 4D (annotated).)

186. Irvin is analogous art to the ’693 patent at least because it is directed to the same field of endeavor: wearable devices with electrical components, including those that provide audio output. (EX1001, Abstract, 2:66-3:9; EX1007, 3:28-45.) Irvin is reasonably pertinent to the problems faced by the ’693 patent

inventors, because Irvin and the ’693 patent both relate to how to determine when a wearable device is being used or worn by the user, so that the device can be controlled accordingly. (EX1001, 92:20-93:37; EX1007, 2:16-51.) Additionally, both Irvin and the ’693 patent strive to minimize power consumption, and thus maximize the battery life, of the wearable device. (EX1001, 70:7-19; EX1007, 2:16-51.)

187. I understand that Irvin was not cited during prosecution.

B. Motivation to Combine with Reasonable Expectation of Success

188. A POSITA would have been motivated to combine Anderson with Irvin to meet the claim limitations. Anderson recognizes that that battery life (and thus power consumption) is a concern for its hearing aid device: “[e]arpiece power consumption is preferably minimized to extend battery life”. (EX1004, 6:55-57.) Reduced power consumption improves usability by extending operation time and enabling smaller, lighter batteries—important for head-worn devices. And as Irvin notes, “battery life is a key component of operator convenience,” and “it is important that wireless headset design incorporates provisions maximizing battery life.” (EX1007, 2:1-5.)

189. Although Anderson proposes earpiece designs that reduce power usage and use rechargeable batteries, this is an imperfect solution because the device cannot be used while the battery is being charged. (EX1004, 22:35-39.)

The POSITA would have sought further improvements to reduce charging time and avoid periods of non-use—particularly problematic for hearing aids, where the device's unavailability can pose health and safety risks.

190. The POSITA would have looked to Irvin, which provides such a solution by teaching automatic transitions between active and low-power states based on user activity. (EX1007, 2:8-51.) Irvin discloses sensors responsive to natural user stimuli (e.g., motion, orientation, or proximity) to control device state. (EX1007, 2:16-28.) Incorporating these teachings into the Anderson system would improve power efficiency, reliability, and usability by enabling automatic, hands-free operation without mechanical switches. (EX1007, 1:13-2:51.) By using a sensor to determine when the device is in use (*e.g.*, in motion, and/or being worn), Irvin teaches implementing a power save function in a way that is reliable, convenient, hands-free, and requires minimal user intervention. (EX1007, 1:13-2:51.) This improves upon Anderson, which relies on manual controls. (EX1004, 21:20-25, 22:14-20.)

191. Irvin's sensor 220 can be, *e.g.*, a contact sensor (such as a contact switch), a movement sensor (such as an accelerometer), or a proximity sensor. (EX1007, 2:27-28, 5:1-6:33.) The POSITA would have been motivated to combine any of these sensor types with Anderson. In Irvin, a "particular" sensor 220 may be selected and configured to detect "actual use" while avoiding

inadvertent activation. (EX1007, 5:1-17.) As guided by Irvin, the POSITA would have selected the sensor based on the use conditions of the hearing aid device—for example, a contact sensor for reliable detection when worn, or a proximity sensor or movement sensor where contact sensing may be unreliable (*e.g.*, when the hearing aid is particularly lightweight or when the user cannot apply sufficient force). (EX1007, 5:1-17, 6:3-8.)

192. The POSITA would have had a reasonable expectation of success in making the combination. Anderson and Irvin both disclose head-worn devices with analogous components (*e.g.*, batteries, programmable logic devices (*e.g.*, ASICs), power electronics, sensors microphones, speakers) and head-worn headset form factors; and Anderson already contemplates multiple sensors. (EX1004, 2:55-59, 24:23-26; EX1007, 3:28-4:38, 8:4-10, FIG. 2A.) The combination thus would have involved the application of known methods to analogous and well-understood components. Irvin further teaches integrating sensor 220 into headset components, such as by "[i]deally" placing sensor 220 in the earpiece, in a retaining member, or in a retaining pad—analogous to headset components of Anderson (earpiece 22, headset 21). (EX1007, 3:29-32, 6:10-13, FIG. 1B.) These disclosures underscore that the POSITA would have had a reasonable expectation of success in combining Irvin's teachings with the hearing aid of Anderson.

C. Claim 23

1. [Preamble] *A personal audio system as recited in claim 1,*

193. See claim 1.

2. [A] *wherein at least one of the earbuds in the pair of earbuds comprises: a radiation detector configured to capture radiation data; and*

194. Irvin discloses that its proximity sensor 220 can be an "active or passive [infrared] sensor," which the POSITA would have understood to include a detector for detecting capturing infrared radiation data (*i.e.*, an amount of infrared radiation detected by the infrared sensor). (*See* EX1001, 104:9-12; EX1007, 6:22-24; EX1019, 216-17.) The POSITA would have combined Irvin's proximity sensor 220 with Anderson's in-ear earpiece as described above, such that the earpiece includes the proximity sensor.

3. [B] *first electronic circuitry electrically connected to the radiation detector, the first electronic circuitry configured to process at least the radiation data captured by the radiation detector,*

195. Irvin teaches that electronic circuitry processes data received from sensor 220 (*e.g.*, an infrared proximity sensor indicating the distance to the user's head) to enable or disable the headset's electronic circuitry based on whether the headset is being worn:

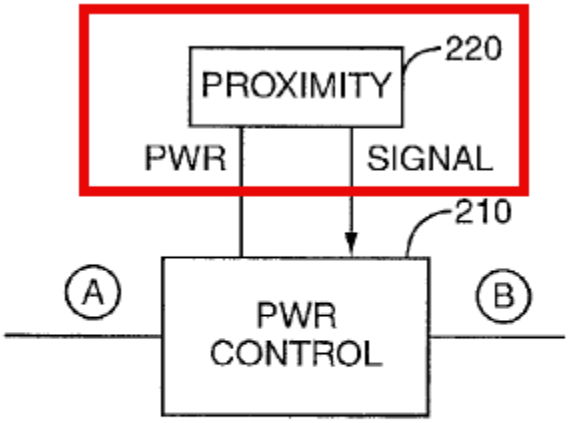

FIG. 4D

(EX1007, 4:3-10, 4:39-49, 6:20-33, FIG. 4D (annotated).)

196. For example, communications circuit 230 transitions to an active state 620 after the sensor 220 indicates a stimulus (*e.g.*, infrared radiation data indicating that the device is worn); and transitions to an inactive state 610 or a sleep state 720 after the indication is no longer provided. (EX1007, 8:11-9:39, FIG. 6, FIG. 7.) The POSITA would have understood that in the combination, the electronic circuitry would electrically connect to the sensor, to receive the sensor's electrical signals; and would be implemented by Anderson's earpiece (*e.g.*, ASIC 845) and/or RPU (*e.g.*, DSP 645), at least because Anderson discloses these components as configured to interface with sensors. (EX1004, 24:23-26.)

4. [C] ***wherein the first electronic circuitry is configured to determine whether the earbud is being worn by a user based on at least the processed radiation data.***

197. See element [B].

D. Claim 30

1. [Preamble] ***A personal audio system as recited in claim 24,***

198. See claim 24.

2. [A] ***wherein the head-worn wearable electronic device includes an accelerometer.***

199. Irvin teaches that sensor 220 can include an accelerometer to detect movement; in the combination of Anderson and Irvin, the accelerometer would indicate whether the device is being worn, as described in Section VIII.A and for claim 23. (EX1007, 5:1-10.)

E. Claim 36

1. [Preamble] ***A personal audio system as recited in claim 24,***

200. See claim 24.

2. [A] ***wherein the head-worn wearable electronic device includes a force sensor configured to receive a user input based at least on sensing force applied to the force sensor.***

201. Irvin teaches that electronic circuitry processes data received from contact sensor 220 (*e.g.*, a contact switch activated by the application of force) to

enable or disable the headset's electronic circuitry based on whether the headset is being worn:

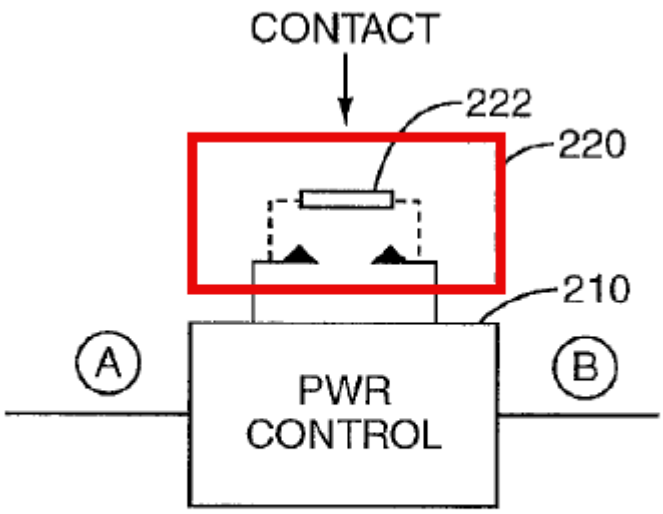

FIG. 4C

(EX1007, 4:3-10, 4:39-49, 6:20-33, FIG. 4C (annotated).)

202. Contact sensor 220 is "ideally" placed in the wireless headset. (EX1007, 6:3-13, FIG. 1.) Irvin's communications circuit 230 transitions between states based on whether the contact sensor 220 indicates a stimulus (*e.g.*, that force has been applied to the contact switch). (EX1007, 8:11-9:39, FIG. 6, FIG. 7.)

F. Claim 37

1. [Preamble] ***A personal audio system as recited in claim 36,***

203. See claim 36.

2. [A] ***wherein the force sensor is configured to detect the user input, the detected user input operating to alter at least an operation of the head-worn wearable electronic device.***

204. Irvin's sensor 220 can be a contact switch that is "actuated when the user places the wireless headset 100 on their body," and is "[i]deally" placed in the earpiece 130, in the retaining member 140, or in the retaining pad 150, as shown in FIG. 1:

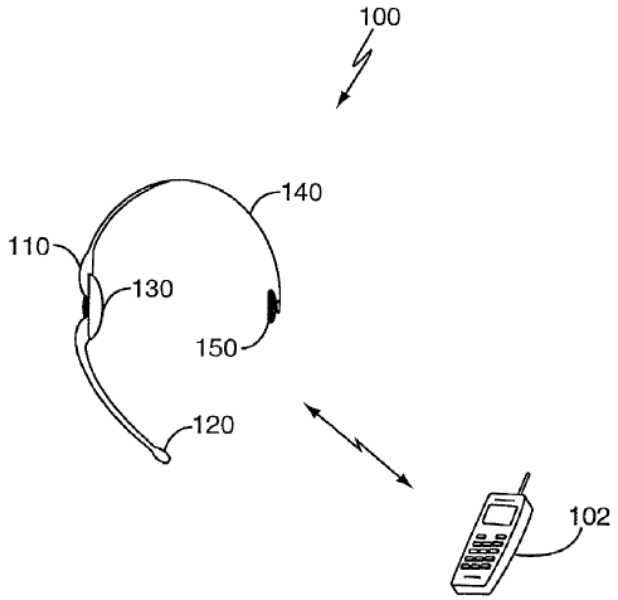

FIG. 1

(EX1007, 6:3-13, FIG. 1.)

205. These elements correspond to headset components of Anderson (*e.g.*, earpiece 22, headset 21), such that in combination with Anderson, the contact

switch will be activated when the user places the headset on his or her head. The POSITA would have understood the contact switch to be a force sensor configured to detect user input (*i.e.*, application of force against the switch by the user's head), consistent with the '693 patent's characterization of such mechanical switches as force sensors. (EX1001, 103:22-47, FIGS. 78, 79.) The user input alters an operation of the combined head-worn apparatus, at least by causing transitions between states as described for claim 36[A].

G. Claim 38

1. [Preamble] *A personal audio system as recited in claim 37,*

206. See claim 37.

2. [A] *wherein the head-worn wearable electronic device is configured to support audio output to the user, and*

207. See claim 24[A] and [E].

3. [B] *wherein the at least one operation of the head-worn electronic device being altered concerns control of the audio output being provided to the user.*

208. See claim 23[B]. In the combination, the operation of the apparatus being altered includes transitioning between active and inactive states based on sensor 220, as described for claim 23[A]. The POSITA would have understood this to include controlling the audio output provided to the user, which is disabled in the inactive state (in which the audio interface 234 of the communications

circuit 230 is disconnected from the power source), and re-enabled in the active state. (EX1007, 2:17-23, 3:53-4:2, 8:11-50, FIG. 8.)

H. Claim 54

1. [Preamble] *A personal audio system as recited in claim 42,*

209. See claim 42.

2. [A] *wherein the first head-worn structure comprises: an infrared emitter configured to at least direct infrared signals towards the user when at least the first head-worn structure of the head-worn wearable electronic device is being worn; and*

210. Irvin's proximity sensor 220 can be an *active* infrared sensor. (EX1007, 6:22-24.) The POSITA would have understood that such sensors "put out energy in the environment," *i.e.*, "emit near-infrared energy and measure whether any significant amount of the IR light is returned" to determine whether an object is present. (*See* EX1019, 196, 216-217.) For example, the infrared radiation can be emitted by an LED. (EX1019, 216.) Accordingly, in the combination, the POSITA would have understood the headset to include an active infrared sensor with an emitter (*e.g.*, an LED) configured to emit infrared radiation toward the user when the headset is worn; and an infrared detector to measure an amount of IR radiation reflected toward the sensor by the user. (EX1019, 216-17.)

3. [B] *an infrared detector configured to detect infrared radiation reflected back from the user when at least the first head-worn structure of the head-worn wearable electronic device is being worn.*

211. See element [A].

I. Claim 55

1. [Preamble] *A personal audio system as recited in claim 54,*

212. See claim 54.

2. [A] *wherein electronic circuitry within the first head-worn structure is configured to facilitate determining whether the first head-worn structure is being worn by the user based on at least the detected infrared radiation.*

213. See claim 23[B] and claim 54[A]. The POSITA would have understood the detected IR radiation to indicate whether the device is being worn, *i.e.*, because the user reflects the IR radiation toward the detector when wearing the device. (EX1019, 216-17.) The POSITA would have further understood the electronic circuitry determining whether the device is worn to be implemented by Anderson's head-worn structure (*e.g.*, earpiece ASIC 845), at least because Anderson discloses the ASIC as configured to interface with sensors. (EX1004, 24:23-26.)

J. Claim 56

1. [Preamble] *A personal audio system as recited in claim 42,*

214. See claim 42.

2. [A] ***wherein the first head-worn structure comprises: a radiation detector configured to capture radiation data; and***

215. See claim 54[A].

3. [B] ***first electronic circuitry provided within the first head-worn structure and electrically connected to the radiation detector, the first electronic circuitry configured to process at least the radiation data captured by the radiation detector.***

216. See claim 23[B]. The POSITA would have understood the electronic circuitry to be implemented by Anderson's head-worn structure (*e.g.*, earpiece ASIC 845), at least because Anderson discloses the ASIC as configured to interface with sensors. (EX1004, 24:23-26.)

K. Claim 57

1. [Preamble] ***A personal audio system as recited in claim 56,***

217. See claim 56.

2. [A] ***wherein the first electronic circuitry is configured to determine whether the first head-worn structure is being worn by a user based on at least the processed radiation data.***

218. See claim 55[A].

L. Claim 58

1. [Preamble] ***A personal audio system as recited in claim 57,***

219. See claim 57.

2. [A] *wherein the radiation detector comprises a photodetector.*

220. The POSITA would have understood Irvin's infrared sensor to comprise a photodetector, because infrared sensors are devices that detect infrared radiation, and photodetectors are devices that detect radiated energy (such as infrared). (EX1016, 557; EX1007, 6:22-24; *see* EX1019, 216-217.) This understanding is consistent with the '693 patent, which describes an infrared photodiode capturing reflected infrared radiation as an infrared detector; and describes (via an incorporated reference) that the Sharp PD100MCOMP infrared photodiode is a "suitable" photodetector. (EX1001, 2:15-19, 93:60-94:3; EX1021, 37:52-59; EX1020, 1, 3.) It is also consistent with Patent Owner's position in the parallel litigation that the claimed radiation detector can comprise "an infrared detector configured to sense infrared light using a photodetector." (EX1022, 589.)

X. GROUND 5: CLAIMS 26, 52, AND 53 ARE RENDERED OBVIOUS BY ANDERSON IN VIEW OF BOZZONE

A. Summary of Bozzone

221. Bozzone is a U.S. Patent that was filed on December 23, 2003, and issued on April 11, 2006. (EX1012.) I understand Bozzone is thus prior art to the '693 patent under at least 35 U.S.C. §§102(a) and (e).

222. Bozzone discloses a charging system for a portable electronic device (*e.g.*, a phone or a wearable device) with a rechargeable battery. (EX1012, 1:6-50,

2:19-20, 2:26-38, 5:45-51, Abstract.) In the charging system, magnets are used to attach the device to its battery charger: the magnets guide the device to the correct charging position, so that charging contacts of the device engage with charging contacts of the charger. (EX1012, 1:11-28, 2:26-57.) For example, the device is provided with single pole magnets that correspond to magnets on the base; attractive and/or repulsive magnetic forces between the magnets guide the device to its charging position. (EX1012, 2:39-3:27, 5:45-6:27.)

223. The system is advantageous because the magnets prevent misalignment of the contacts while minimizing frictional wear and improving accessibility for users with limited dexterity. (EX1012, 1:29-46, 2:39-47.)

224. Bozzone is analogous art to the ’693 patent because it is directed to the same field of endeavor: wearable devices with electrical components, including rechargeable batteries. (EX1001, 6:66-7:6, 37:62-38:26, Abstract; EX1012, 1:6-50, 2:19-20, 2:26-38, 5:45-51, Abstract.) By disclosing systems that facilitate aligning the charging contacts of a wearable device and a battery charger Bozzone is reasonably pertinent to a problem faced by the ’693 patent inventors—how to place the device in electrical contact with the charger, so that the device can be recharged without removing the battery (EX1001, 37:62-38:26; EX1004, 1:55-63.)

B. Motivation to Combine with Reasonable Expectation of Success

225. The POSITA would have been motivated to combine the teachings of Anderson and Bozzone. Anderson discloses that the head-worn earpiece can include a battery that can be recharged using a recharger or storage tray. (EX1004, 6:55-57, 22:46-48.) But Anderson does not provide the details of the recharger, including how to securely couple the earpiece to the recharger. The POSITA would have looked to Bozzone to supply these implementation details, as Bozzone describes recharging wearable devices such as those of Anderson, including how magnets can align and secure the device for charging. (EX1012, 1:6-50, 2:19-20, 2:26-38, 5:45-51.)

226. The POSITA would have had a reasonable expectation of success in making the combination: battery chargers compatible with Anderson were "well known in the art", indicating that the POSITA would have been familiar with charging devices and their implementation. (EX1004, 22:46-48.) And Bozzone describes wearable devices and rechargeable batteries analogous to those of Anderson, and provides specific implementation guidance for both the devices and their charging bases. (EX1012, 1:6-50, 2:19-20, 2:26-38, 5:45-51.) The combination thus would have been a predictable endeavor involving known components and techniques.

C. Claim 26

1. [Preamble] *A personal audio system as recited in claim 24,*

227. See claim 24.

2. [A] *wherein the head-worn wearable electronic device includes at least a rechargeable battery and at least one conductive element,*

228. Anderson's head-worn earpiece includes a rechargeable battery, as shown in FIG. 8:

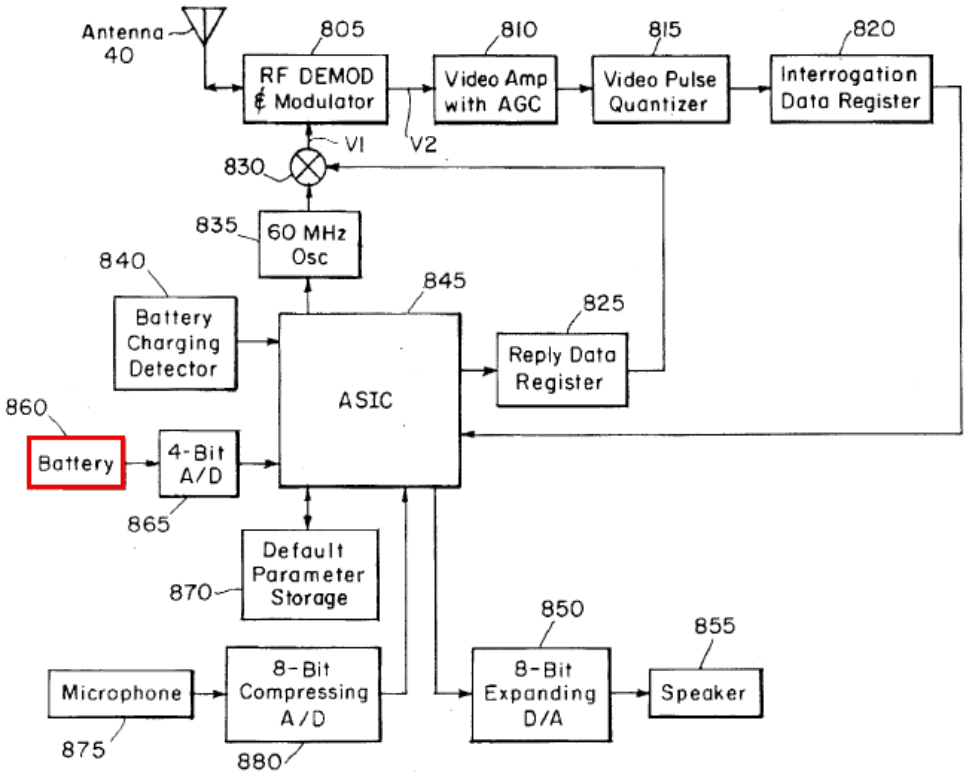

FIG. 8

(EX1004, 6:55-57 ("use of a rechargeable battery is desirable"), FIG. 8 (annotated).)

229. The battery is recharged by placing the device in a recharger. (EX1004, 22:46-48.) The POSITA would have understood the device to include a conductive element to couple the battery the power source for charging. Similarly, in combination with Anderson as described above, Bozzone provides that the device includes charging contacts that connect to the battery and engage with the charger to conduct power. (EX1012, 3:49-54.)

3. [B] *wherein the rechargeable battery is able to be electrically coupled via the at least one conductive element to a charging apparatus and charged when the head-worn wearable electronic device is placed within the charging apparatus, and*

230. See element [A]. As provided by Bozzone, when the device is connected to the charger, the device's charging contacts couple to the electrical contacts of the charger to charge the battery. (EX1012, 3:49-54.)

4. [C] *wherein the electrical coupling of the at least one conductive element with the charging apparatus is supported by at least a magnetic element.*

231. In the combination, the electrical coupling is supported by magnets that guide the device to the correct charging position. (EX1012, 1:11-28, 2:26-57.) For example, the device and the charger are provided with corresponding pairs of single pole magnets, whose magnetic forces guide the device into position. (EX1012, 2:39-3:27, 5:45-6:27.)

D. Claim 52

1. [Preamble] *A personal audio system as recited in claim 42,*

232. See claim 42.

2. [A] *wherein the first head-worn structure of the wearable electronic device comprises: a battery internal to the first head-worn structure; and*

233. See claim 26[A].

3. [B] *at least one conductive element that facilitates electrical coupling with the battery, the at least one conductive element is at least partially internal to the first head-worn structure but remains at least partially exposed external to the first head-worn structure, and the at least one conductive element comprises at least one conductive pad,*

234. Because Anderson's battery is internal to the head-worn structure, as described for claim 26[A], the POSITA would understand the conductive element to be at least partially internal to the head-worn structure, so that it can couple to the battery for charging. (EX1004, 6:55-57 ("use of a rechargeable battery is desirable"), FIG. 8.) Similarly, Bozzone teaches that the device includes charging contacts, which can be "embedded" in magnets of the device. (EX1012, 1:15-18, 6:35-37.)

4. [C] ***wherein the battery is able to be electrically coupled via the at least one conductive element to a charging apparatus and charged when at least the first head-worn structure of the head-worn wearable electronic device is placed within the charging apparatus, and***

235. See claim 26[B].

5. [D] ***wherein the electrical coupling of the at least one conductive element with the charging apparatus is supported by at least a magnetic element.***

236. See claim 26[C].

E. Claim 53

1. [Preamble] ***A personal audio system as recited in claim 52,***

237. See claim 52.

2. [A] ***wherein the head-worn wearable electronic device comprises: a microphone at least partially internal to the first head-worn structure,***

238. In Anderson, a wireless microphone 20 is "mounted on" the headset 21 to "form" the earpiece 22, as shown in FIG. 2:

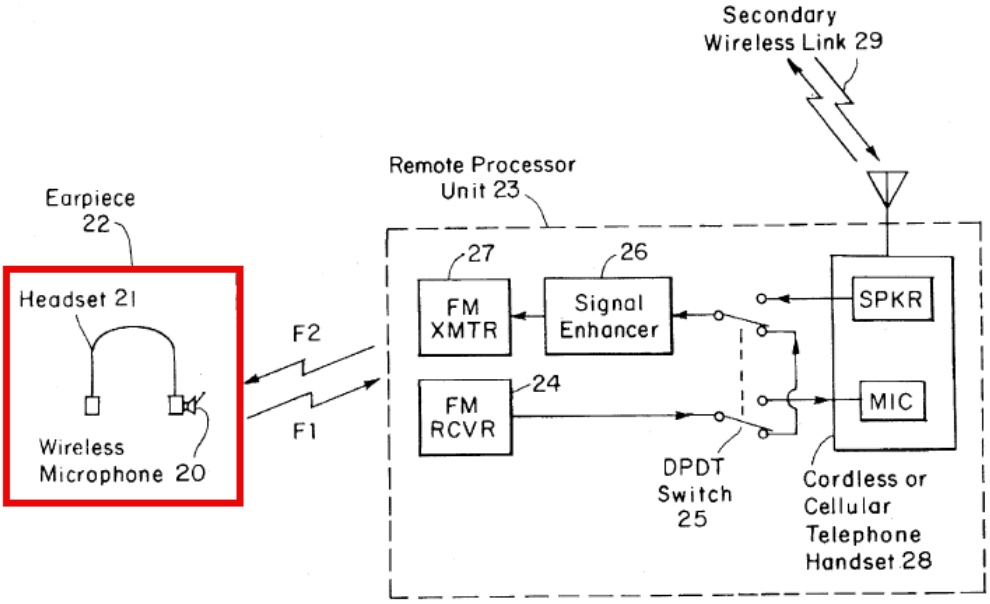

FIG. 2

(EX1004, 4:35-39, FIG. 2 (annotated).)

239. The earpiece apparatus is shown in FIG. 2 to include the headset 21; and is head-worn as described for claim 24[A]. (EX1004, FIG. 2.) The wireless microphone 20 is at least partially internal to this head-worn apparatus, in order to connect to the headset's battery, and to connect to the A/D converter 880 as shown in FIG. 8 (illustrating the earpiece):

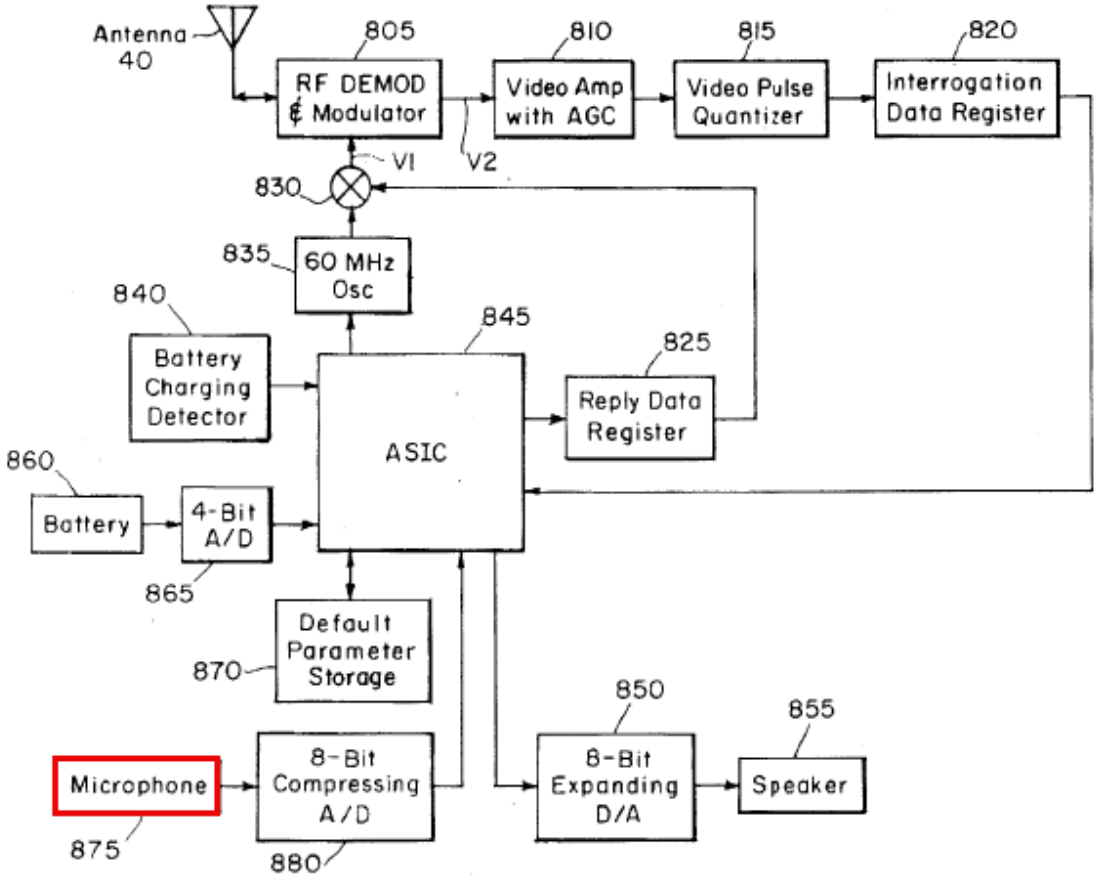

FIG. 8

(EX1004, 3:40-41, 5:52-55, 16:28-32, FIG. 8; EX1015, 46.)

240. Reference to FIG. 8's disclosures is appropriate in the combination, which implements Anderson's full-featured application (FIG. 8) in its headset-based device (FIG. 2).

3. [B] *wherein the head-worn wearable electronic device is configured to receive a voice input via the microphone, determine a requested operation from the voice input using voice recognition, and control an operation by the head-worn wearable electronic device based on the requested operation.*

241. Anderson discloses that a user can provide voice commands, which are "received as audio signals" by the head-worn earpiece and transmitted to the RPU (EX1004, 25:15-30.) The POSITA would have understood the audio signals to be picked up by the microphones, which are the components of the earpiece that receive audio signals. (EX1004, 5:3-6, 6:8-15, 22:62-23:5.) The voice commands cause the RPU to "initiate actions" such as changing hearing aid parameter settings (*e.g.*, volume). (EX1004, 25:22-27.)

XI. GROUND 6: CLAIMS 31, 32, 43, AND 44 ARE RENDERED OBVIOUS BY ANDERSON IN VIEW OF PACZKOWSKI

A. Summary of Paczkowski

242. Paczkowski is a U.S. Patent that was filed on February 23, 2001, published on November 8, 2001, and issued on January 6, 2004. (EX1013.) I understand Paczkowski is thus prior art to the '693 patent under at least 35 U.S.C. §§102(a), (b), and (e). I understand Paczkowski was not cited during prosecution.

243. Paczkowski discloses manufacturing a circuit for a hearing aid earpiece by using flex circuits, which can include circuit boards and integrated circuits. (EX1013, 3:17-19.) In an example flex circuit module of a hearing aid, a

flex circuit can be coupled to a battery, a microphone, and two or more integrated circuits, as illustrated in FIG. 5:

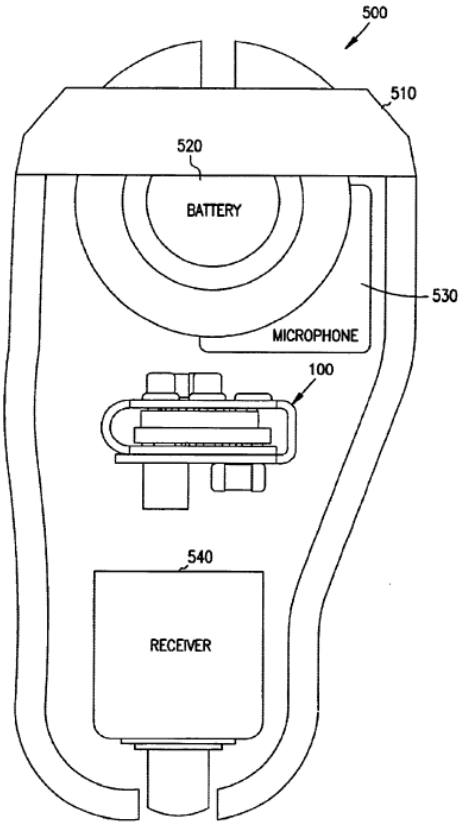

FIG. 5

(EX1013, 4:15-22, FIG. 5.)

244. The flex circuit includes a flexible base material and can be folded, permitting it to efficiently occupy a small housing. (EX1013, 2:44-61.)

B. Motivation to Combine with Reasonable Expectation of Success

245. The POSITA would have been motivated to combine the teachings of Anderson and Paczkowski. Anderson describes earpiece embodiments, including binaural embodiments in which each of two earpieces includes an integrated circuit

(*i.e.*, ASIC 845); but does not include details how the earpiece circuitry would be manufactured or made to fit in a head-worn enclosure. (EX1004, 12:38-46, 23:36-39, FIG. 8.) The POSITA would thus have been motivated to combine Anderson with Paczkowski, which describes circuitry fabrication details for hearing aid circuitry analogous to those of Anderson. The POSITA would have found Paczkowski particularly relevant because it addresses needs specific to hearing aids, including their small size, and is compatible with integrated circuits such as used in Anderson. (EX1013, 1:30-41.) The POSITA would have combined Anderson's head-worn earpiece with Paczkowski's teachings of flex circuits, in order to realize Paczkowski's advantages of low cost and space efficiency. (EX1013, 1:30-41.)

246. The POSITA would have had a reasonable expectation of success in making the combination. Anderson and Paczkowski are directed to analogous devices (hearing aids) that include analogous and conventional electronic components, such as integrated circuits, batteries, and microphones; and Paczkowski couples and mounts these components using "conventional" methods. (EX1004, 12:38-46, FIG. 8; EX1013, 3:17-21, 3:41-47.) Anderson provides a circuit diagram (FIG. 8) for the earpiece, including by identifying specific components and connections; in view of this guidance, the POSITA thus would have found it a predictable endeavor to implement the earpiece circuit using

Paczkowski's circuit board teachings, especially given their conventional nature. (EX1004, 12:38-46, FIG. 8.)

C. Claim 31

1. [Preamble] *A personal audio system as recited in claim 24,*

247. See claim 24.

2. [A] *wherein the head-worn wearable electronic device includes a plurality of circuit boards, each circuit board including at least one integrated circuit mounted thereto.*

248. Anderson discloses binaural embodiments in which the head-worn device includes left and right earpieces. (EX1004, 23:36-39, FIG. 2.) Each earpiece of the device includes an application-specific integrated circuit (ASIC) 845 to control the earpiece functions. (EX1004, 12:38-46, FIG. 8.)

249. Paczkowski teaches that in a hearing aid earpiece, integrated circuits such as the two ASICs 845 can be mounted to a flexible circuit. (EX1013, 4:15-22, FIG. 5.) The POSITA would have combined Anderson and Paczkowski to implement Anderson's earpiece circuits (*e.g.*, as in FIG. 8) using Paczkowski's flexible circuits as described in Section X.B. (EX1004, FIG. 8.) For example, each of the left and right earpieces would include a respective flexible circuit to which a respective ASIC 845 is mounted.

250. The POSITA would have understood each flexible circuit to include a circuit board; Paczkowski discloses that all of the components mounted to the

flexible circuit can be integrated into circuit boards. (EX1013, 3:52-56.) Additionally, the POSITA would understand the flexible circuit itself to be a type of circuit board: for example, FIG. 1 depicts flexible circuit 110 as a circuit board to which electrical components 120 are mounted:

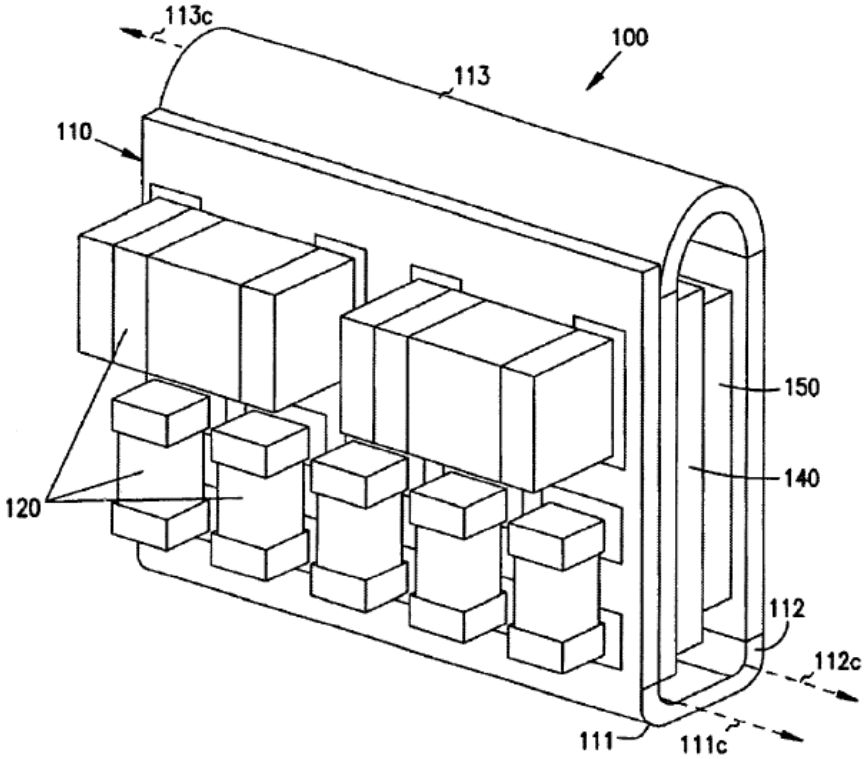

FIG. 1

(EX1013, 2:29-43, FIG. 1.)

D. Claim 32

1. [Preamble] ***A personal audio system as recited in claim 31,***

251. See claim 31.

2. [A] *wherein at least one of the circuit boards is a flexible printed circuit board.*

252. See claim 31[A].

E. Claim 43

1. [Preamble] *A personal audio system as recited in claim 42,*

253. See claim 42.

2. [A] *wherein the first head-worn structure comprises: a first circuit board internal to the first head-worn structure,*

254. See claim 31[A].

3. [B] *the first circuit board supporting at least a first integrated circuit and a second integrated circuit, the first integrated circuit and the second integrated circuit being physically attached to the first circuit board,*

255. Paczkowski discloses that a flexible circuit can include two integrated circuits. (EX1013, 4:20-22.) In combination with Anderson, the flexible circuit would implement Anderson's earpiece circuit (FIG. 8) as described for claim 31[A], with the circuit components attached to a circuit board of the flexible circuit. (EX1004, FIG. 8.)

256. The POSITA would understand those components to include at least two integrated circuits as described for claim 31[A]. The POSITA would understand that in Anderson's earpiece circuit, in addition to ASIC 845, components such as the video amplifier 810 and video pulse quantizer 815 could

be preferably implemented as integrated circuits. For example, these components are described in a reference document as including RAM, microprocessors, and A/D converters, which were typically packaged as integrated circuits. (EX1004, 12:6-13; EX1023; EX1024, 213-217.)

4. [C] *and the first integrated circuit being electrically connected to the second integrated circuit or another electronic component.*

257. See element [B]. In the earpiece circuit diagram (FIG. 8), at least ASIC 845 is electrically connected to other electronic components in the circuit, such as a storage 870 and a 4-bit A/D converter 865:

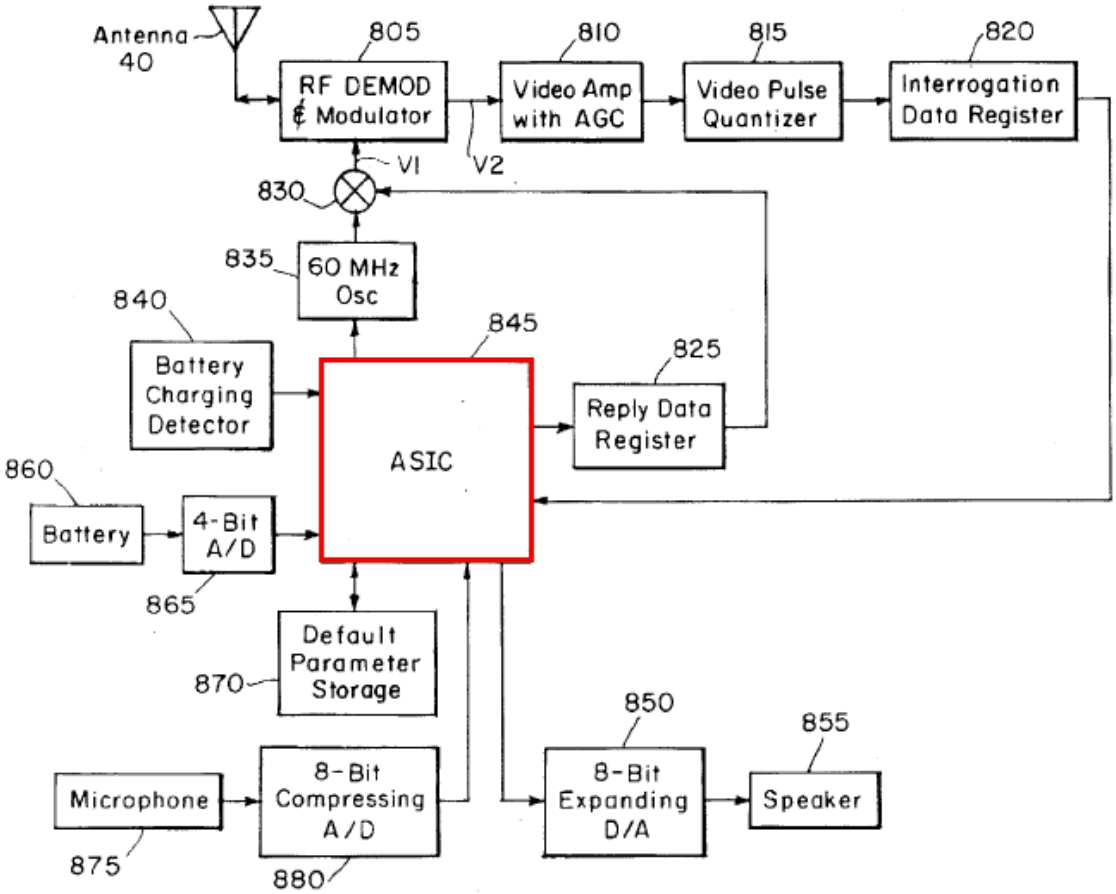

FIG. 8

(EX1004, 12:38-46, FIG. 8 (annotated).)

F. Claim 44

1. [Preamble] *A personal audio system as recited in claim 43,*

258. See claim 43.

2. [A] *wherein the first circuit board is a flexible circuit board.*

259. See claim 43[B].

XII. GROUND 7: CLAIMS 33-35 ARE RENDERED OBVIOUS BY ANDERSON IN VIEW OF BODLEY

A. Summary of Bodley

260. Bodley is a U.S. Patent that was filed on January 15, 2003, published on July 15, 2004, and issued on November 17, 2009. (EX1009.) I understand Bodley is thus prior art to the ’693 patent under at least 35 U.S.C. §§102(a) and (e). I understand Bodley was not cited during prosecution.

261. Bodley discloses a headset for wireless communication that includes an earpiece, a microphone, a speaker, and an integral display. (EX1009, 1:47-57, 2:38-50.) Bodley’s headset attaches to the user using “any of a variety of means,” including a headband for head support. (EX1009, 2:38-40.) FIG. 1 illustrates an ear-worn embodiment:

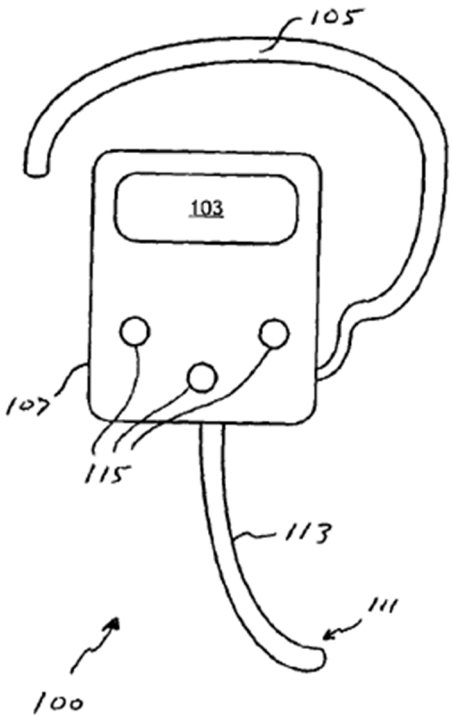

(EX1009, FIG. 1.)

262. The headset preferably connects to a "communications system" "that enables both voice and hearing data transfer," such as a cell phone. (EX1009, 2:28-37.) The body of the headset houses electronic components, and includes a touch sensitive display for presenting information (such as battery level) and receiving touch input (such as for entering phone numbers or operating the cell phone). (EX1009, 2:44-46, 2:65-67, 3:5-43.)

263. Bodley is analogous art to the '693 patent because it is directed to the same field of endeavor: wearable devices with electrical components, including those that provide audio output. (EX1001, Abstract, 2:66-3:9; EX1009, Abstract, 1:47-67, 2:28-50.) For example, Bodley relates to wearable headsets in which

audio signals are presented to a user—analogous to the wearable audio devices of the ’693 patent. (*See* EX1001, 2:66-3:22; EX1009, 2:28-50.) Similarly, by disclosing devices with electrical components to configure audio operation (*e.g.*, headset volume, voice dialing, ring mode), Bodley is reasonably pertinent to a problem faced by the ’693 patent inventors—using wearable devices with electrical components to “facilitate audio support.” (EX1001, 2:66-3:9; EX1009, 1:47-67.)

B. Motivation to Combine with Reasonable Expectation of Success

264. The POSITA would have been motivated to combine the teachings of Bodley with those of Anderson. Anderson discloses that the RPU includes pushbuttons (e.g., a keyboard) for data entry and parameter control, and may also support voice input for functions such as dialing telephone numbers. (EX1004, 2:51-55, 20:52-21:30, 25:15-29, FIG. 7.) However, a POSITA would have recognized drawbacks to both approaches; pushbuttons and keyboards rely on moving parts prone to failure and require force and fine motor control, which may be difficult for users with impairments, particularly given the device’s small size. Voice control likewise is limited, as Anderson discloses only “limited-vocabulary” commands. (EX1004, 25:22-34.) It also requires the user to speak, making it unsuitable for covert operation, noisy environments, or users with speech impairments. (EX1004, 1:10-18, 20:48-60.)

265. A POSITA would have been motivated to address these usability issues by combining Anderson with Bodley's touch input teachings for wearable audio devices. For example, integrating Bodley's touch sensitive sensor into the earpiece, as taught by Bodley, would eliminate moving parts, improving reliability and durability—particularly for hearing aid devices used daily in varied environments. (EX1009, FIG. 1.) Touch controls also enable low-force input and are suitable for noisy or covert operation.

266. The POSITA would have had a reasonable expectation of success in making the combination. Anderson and Bodley disclose structurally and functionally similar head-worn audio devices that use analogous and well-understood components (*e.g.*, microphones, speakers, wireless transceivers, and control circuitry), making their teachings readily combinable. (EX1004, FIG. 1, FIG. 2; EX1009, 1:47-67, 2:38-50, 3:44-4:3, FIG. 1, FIG. 9.) Because Anderson already provides user controls (*e.g.*, dialing) for the earpiece, using Bodley's known touch interface to perform similar functions would have been straightforward, applying known components and techniques to yield predictable results.

C. Claim 33

1. [Preamble] *A personal audio system as recited in claim 24,*

267. See claim 24.

2. [A] *wherein the head-worn wearable electronic device includes a touch sensitive surface.*

268. Bodley discloses a headset 100 that includes a "touch sensitive" display panel 103 for data input, as shown in FIG. 1:

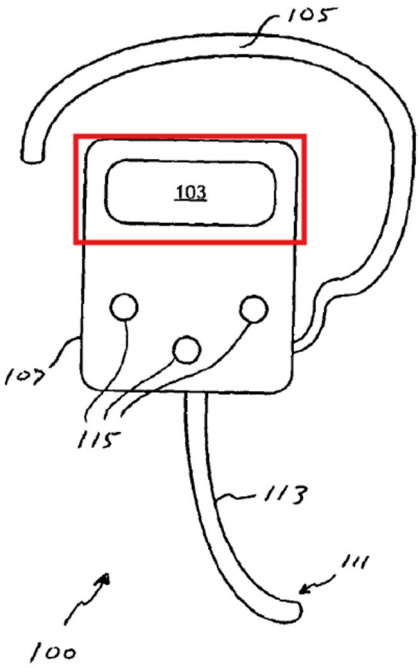

(EX1009, FIG. 1 (annotated), 2:28-3:23.)

269. The POSITA would have incorporated Bodley's touch-sensor teachings into the Anderson headset, such that the head-worn earpiece includes a touch sensitive surface for controlling the hearing aid. Although Bodley describes the touch sensor as part of a display, a POSITA would have understood that the touch sensitive surface could be implemented with or without a display, while retaining the same advantages.

D. Claim 34

1. [Preamble] *A personal audio system as recited in claim 33,*

270. See claim 33.

2. [A] *wherein the touch sensitive surface is configured to detect a user input, the detected user input operating to at least alter operation of the head-worn wearable electronic device.*

271. In the combination of Bodley with Anderson, the POSITA would have understood the touch sensitive surface to provide at least the input functionality of Anderson's pushbuttons and/or voice control. For example, the touch sensitive surface would be used to control parameter settings such as volume, or to perform operations such as telephone dialing, as disclosed by Anderson, thereby altering operation of the head-worn device. (EX1004, 20:52-55, 25:15-29.) These operations are consistent with behavior of the touch display in Bodley, *i.e.*, adjusting headset volume or dialing a telephone. (EX1009, 3:15-20.)

E. Claim 35

1. [Preamble] *A personal audio system as recited in claim 34,*

272. See claim 34.

2. [A] *wherein the head-worn wearable electronic device is configured to support audio output to the user, and*

273. See claim 24[A] and [E].

3. [B] *wherein the at least one operation of the head-worn electronic device being altered concerns control of the audio output being provided to the user.*

274. See claim 34[A]. For example, the touch sensitive surface would be used to control volume settings, such as headset volume. (EX1004, 20:52-55, 25:15-29; EX1009, 3:15-20.)

XIII. GROUND 8: CLAIMS 45-48 ARE RENDERED OBVIOUS BY ANDERSON IN VIEW OF BODLEY AND ZADESKY

A. Summary of Zadesky

275. Zadesky is a U.S. Patent that was filed on July 1, 2002, published on April 24, 2003, and issued on May 16, 2006. (EX1010.) I understand Zadesky is thus prior art to the '693 patent under at least 35 U.S.C. §§102(a), (b), and (e). I understand Zadesky was not cited during prosecution.

276. Zadesky describes that a portable audio device can include a touch sensitive surface (touchpad) for receiving user touch input. (EX1010, 1:47-3:22.) The touchpad can control the media player based on a sliding input from the user, as shown in FIG. 3C:

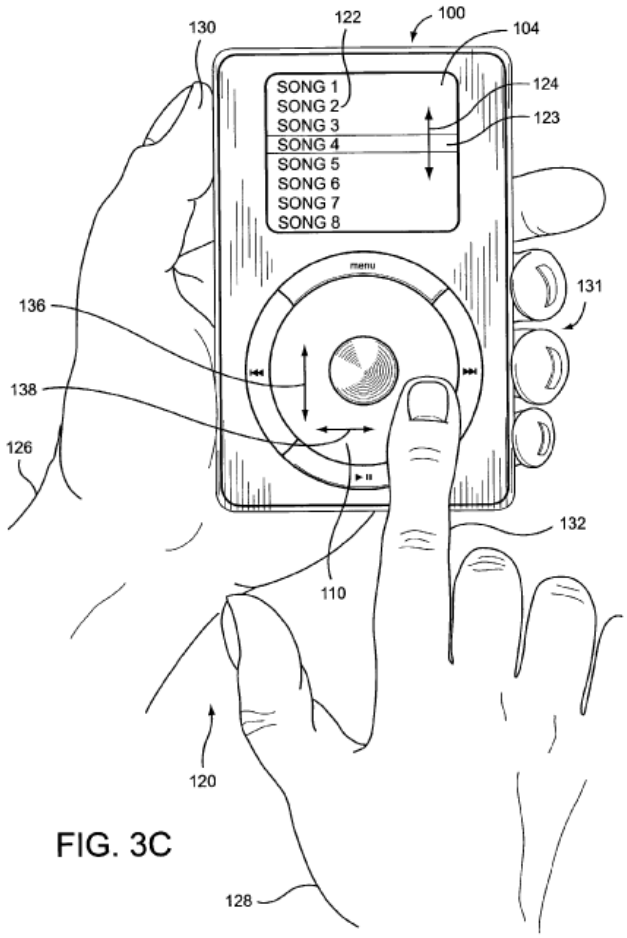

FIG. 3C

(EX1010, FIG. 3C.)

277. Zadesky is analogous art to the ’693 patent because it is directed to the same field of endeavor: portable devices with electrical components, including those that provide audio output. (EX1001, Abstract, 2:66-3:9; EX1010, 3:38-4:3.) For example, Zadesky discloses a handheld media player in which audio is presented to a user—analogous to the audio devices of the ’693 patent. (*See* EX1001, 2:66-3:22; EX1010, 3:38-46, 4:60-5:26.) Similarly, by disclosing that

such handheld devices include electrical components (*e.g.*, touchpads) for providing audio control functions (*e.g.*, volume), Zadesky is reasonably pertinent to a problem faced by the ’693 patent inventors—using wearable devices with electrical components to “facilitate audio support.” (EX1001, 2:66-3:9; EX1010, 10:34-51.)

B. Motivation to Combine with Reasonable Expectation of Success

278. The POSITA would have been motivated to combine the teachings of Anderson and Bodley with Zadesky with a reasonable expectation of success. As discussed above, the combined Anderson-Bodley system includes a headset with a touch sensitive surface for controlling earpiece functions. However, those references do not detail how a user interacts with the touch surface, motivating a POSITA to look to Zadesky to supply these details. Zadesky teaches touchpad input techniques that “facilitate user interaction” with audio devices, and provide “numerous” advantages such as ease and speed of use, accessibility, and ergonomics. (EX1010, 3:26-37, 4:37-40, 5:61-6:8, 13:36-60.)

279. Zadesky further discloses using sliding input on a touch surface to control functions such as volume. (EX1010, 10:40-51.) The POSITA would have incorporated such sliding input to achieve faster, more intuitive, and ergonomic control—particularly beneficial in wearable devices, such as in Anderson and

Bodley, where the user may be unable to see the interface (*e.g.*, if worn on the user's head).

280. Zadesky also emphasizes applicability to a wide range of portable audio devices, compatibility with "widely varied" types of touchpads, and implementation using common components (e.g., processors and memory), consistent with Anderson and Bodley. (EX1010, 5:27-45, 6:4-8, 13:61-14:20.) Thus, combining Zadesky would have required only modifying the existing touch surface to recognize sliding input, as taught by Zadesky—a straightforward and predictable change supporting a reasonable expectation of success.

C. Claim 45

1. [Preamble] *A personal audio system as recited in claim 42,*

281. See claim 42.

2. [A] *wherein the first head-worn structure comprises: a user input device, the user input device being configured to receive a user input, the user input device is based on at least capacitive effect, wherein the user input being received induces at least a capacitive change to produce at least an electrical response.*

282. Zadesky's portable media player device includes a touchpad 110 configured to "receive input from a finger moving across the surface of the touch pad 110" and control the media player accordingly, *e.g.*, by scrolling through a list of media files on the player, or "vary[ing] a characteristic of the media player,"

such as changing the volume. (EX1010, 5:61-6:8, 10:40-51.) The POSITA would have understood Zadesky's "finger moving across the surface" to disclose a sliding action.

283. Zadesky's touch input sensing is based on "capacitive sensing." (EX1010, 2:29-34.) Such capacitive touchpads were in "popular" use as input devices by the priority date. (EX1025, 5, 138.) The POSITA would have understood the touch surface (a user input device) to be based on a capacitive effect in that it receives the user touch input, which induces a capacitive change and produces an electrical response (*i.e.*, output signals provided to the RPU). (*See* EX1025, 1, 5, 138-139.)

D. Claim 46

1. [Preamble] *A personal audio system as recited in claim 45,*

284. See claim 45.

2. [A] *wherein the user input device is configured to distinguish at least a direction of the user input with respect to the user input device.*

285. See claim 45[A]. Zadesky teaches distinguishing a direction of the user input with respect to the touch sensitive surface; for example, the "direction that the finger moves may be arranged to control the direction of scrolling," *i.e.*, by moving "vertically up when the finger is moved in a first direction and vertically down when the finger is moved in a second direction." (EX1010, 6:38-59.)

E. Claim 47

1. [*Preamble*] *A personal audio system as recited in claim 46,*

286. See claim 46.

2. [A] *wherein the user input device is configured to detect at least a sliding of a finger action with respect to the user input device.*

287. See claim 45[A]. As shown in FIG. 3C below, a user can "*slide* his or her finger 132 substantially tangentially from all sides of the touch pad," such that the touchpad is "actuated forwards and backwards as shown by arrows 136 and side to side by arrows 138." (EX1010, 9:17-21 (emphasis added).)

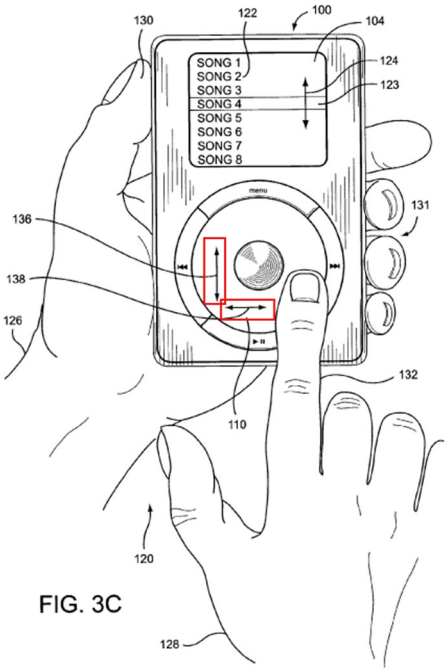

FIG. 3C

(EX1010, FIG. 3C (annotated).)

F. Claim 48

1. [Preamble] *A personal audio system as recited in claim 45,*

288. See claim 45.

2. [A] *wherein the user input device is configured to distinguish at least whether the user input pertains to a forward sliding action or a backward sliding action with respect to the user input device.*

289. See claim 47[A].

XIV. GROUND 9: CLAIM 49 IS RENDERED OBVIOUS BY ANDERSON IN VIEW OF BODLEY, ZADESKY, AND PACZKOWSKI

A. Claim 49

1. [Preamble] *A personal audio system as recited in claim 48,*

290. See claim 48.

2. [A] *wherein the head-worn wearable electronic device comprises: a second circuit board internal to the second head-worn structure,*

291. See claim 31[A].

3. [B] *the second circuit board supporting at least a third integrated circuit and a fourth integrated circuit, the third integrated circuit and the fourth integrated circuit being physically attached to the second circuit board, and*

292. See claim 43[B]. As described for claim 43[B], in the combination, a first earpiece of the head-worn device implements Anderson's earpiece circuit using a first circuit board with first and second integrated circuits. In binaural embodiments of a head-worn device featuring left and right earpieces, the second

earpiece would implement its respective earpiece circuit using a second circuit board with third and fourth integrated circuits, such as described for claim 31[A]. (EX1004, 12:38-46, FIG. 8.)

4. [C] *the third integrated circuit being electrically connected to the fourth integrated circuit or another electronic component.*

293. See element [B]; at least the ASIC 845 of the second circuit board is electrically connected to another electronic component as described for claim 43[C].

5. *Motivation to Combine*

294. The POSITA would have been motivated to combine the teachings of Anderson, Bodley, Zadesky, and Paczkowski as described in Sections XI.B, XII.B, and X.B.

XV. GROUND 10: CLAIM 51 IS RENDERED OBVIOUS BY ANDERSON IN VIEW OF LYNCH AND PACZKOWSKI

A. Summary of Lynch

295. Lynch is a U.S. Patent that was filed on April 14, 2004 and issued on October 6, 2009. (EX1011.) I understand Lynch is thus prior art to the ’693 patent under at least 35 U.S.C. §§102(a) and (e). I understand Lynch was not cited during prosecution.

296. Lynch discloses a wireless assistive listening device cap (“ALD Cap”) for a hearing aid device. (EX1011, 1:61-2:23.) The ALD Cap includes electronics

that supplement or replace hearing aid components and is compatible with various hearing aid types, including head-mounted devices with or without BTE units. (EX1011, 1:61-2:23, 3:1-4.) The ALD Cap improves the comfort, ergonomics, and aesthetics of the hearing aid by fastening electronic components of the hearing aid to the top of the user's head. (EX1011, 1:17-57, 2:20-23.) The ALD Cap is attached on top of head-mounted components of a hearing aid system, *e.g.*, via a magnet; and can communicate wirelessly with those components. (EX1011, 2:63-66, 3:5-12, 3:34-44.) FIG. 5 illustrates an ALD Cap 600 connected to an external component 610 of a hearing aid system:

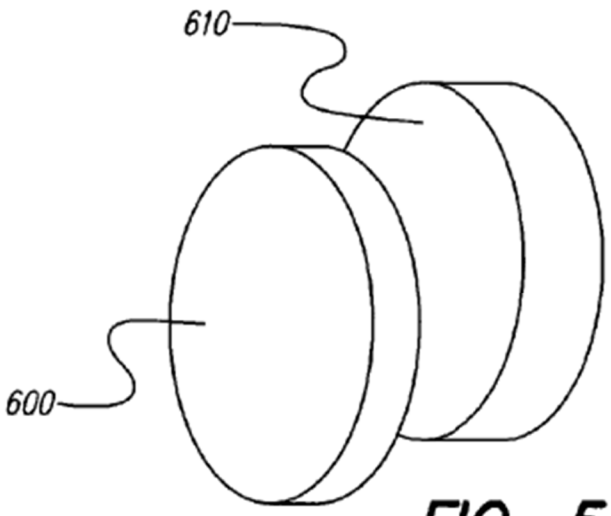

FIG. 5

(EX1011, 4:37-41, FIG. 5.)

297. Lynch is analogous art to the '693 patent because it is directed to the same field of endeavor: wearable devices with electrical components, including

devices that provide audio output. (EX1001, Abstract, 2:66-3:9; EX1011, Abstract, 1:10-2:23.) For example, Lynch relates to head-wearable hearing aid systems in which audio signals are presented to a user—analogous to the head-wearable audio devices of the '693 patent. (*See* EX1001, 2:66-9:62; EX1011, 1:61-2:23.) Similarly, by disclosing wearable systems that "provide[] access to assistive listening technology," Lynch is reasonably pertinent to a problem faced by the '693 patent inventors—using wearable devices to provide users with "enhanced hearing." (EX1001, 2:66-3:9; EX1011, 2:20-23.)

B. Motivation to Combine Anderson and Lynch with Reasonable Expectation of Success

298. A POSITA would have been motivated to combine the teachings of Anderson and Lynch. In Anderson's hearing aid, the earpiece wirelessly communicates with an RPU worn or carried by the user (e.g., in a pocket), enabling reduced size and power consumption in the earpiece. (EX1004, 1:51-2:4, 4:4-7.) Anderson acknowledges the RPU may be small and "easily misplaced," and addresses this problem by entering a limited stand-alone mode while the RPU is located. (EX1004, 21:31-22:2.)

299. This solution is suboptimal because remote processing and communication features are unavailable, and only default parameters are used. (EX1004, 21:57-62.) A POSITA would have sought to reduce the risk of

misplacing the RPU without sacrificing its size or wireless advantages. Lynch provides such a solution by mounting hearing aid electronics on the user's head via an ALD Cap, thereby minimizing separation between components and improving comfort, ergonomics, and aesthetics. (EX1011, 1:61-2:23.)

300. Lynch expressly contemplates use with head-worn hearing aids and emphasizes providing assistive listening functionality without undesirable ear-worn components. (EX1011, 1:61-2:23.) Further, Anderson broadly discloses that the RPU may be "carried on" the user without specifying location, making head mounting an obvious option among a finite set of locations. (EX1004, 6:1-3.) Using Lynch's ALD Cap to mount the RPU would preserve Anderson's advantages, including wireless operation and "complete freedom of movement" while the hearing aid is worn. (EX1004, 2:32-35.)

301. The POSITA would have had a reasonable expectation of success. Lynch's ALD Cap is designed to integrate with various hearing aids, including head-mounted hearing aids that do not use BTE components—the same type of hearing aid (*e.g.*, featuring headset 21) disclosed in Anderson. (EX1011, 2:15-23.) Anderson further teaches that many system variations and RPU implementations are possible using "well known" components. (EX1004, 12:48-49.) Additionally, Anderson's RPU may be small and have a "wide variety of form factors," suggesting that it could be flexibly and easily repositioned. (EX1004, 20:48-52,

21:31-34.) These disclosures indicate that adapting Anderson's RPU in view of Lynch would have been a predictable modification.

C. Claim 51

1. [Preamble] *A personal audio system as recited in claim 42,*

302. See claim 42.

2. [A] *wherein the first head-worn structure comprises: a first circuit board internal to the first head-worn structure, the first circuit board supporting at least a first integrated circuit, the first integrated circuit being physically attached to the first circuit board,*

303. As described above, in the combination of Anderson and Lynch, the RPU would be located in the ALD Cap of the head-worn structure. Anderson discloses that the RPU includes multiple integrated circuits, such as the Motorola DSP56L002 digital signal processor, as well as various other electronic components as shown in FIG. 9. (EX1004, 12:48-53, FIG. 9.) Paczkowski teaches that in hearing aid systems such as the Anderson/Lynch combination, integrated circuits can be attached to a circuit board, for stability ("circuit-bearing substrate") and to form specific functions (*e.g.*, the specific functions of the RPU). (EX1013, 3:52-56.) The POSITA would have incorporated these teachings and used a circuit board in the RPU as a substrate to attach the integrated circuits and other electrical components.

304. The POSITA would have combined the Anderson/Lynch head-worn structure with Paczkowski, with a reasonable expectation of success, for the reasons described in Section X.B; *e.g.*, to provide manufacturing details omitted for Anderson's RPU, and to benefit from circuit manufacturing techniques suitable for compact hearing aid systems. Similarly, the POSITA would have understood such circuit boards to be a "reliable fabrication technique," and "routinely used" in applications such as medical devices, where "high reliability is essential," further motivating the successful combination. (EX1026, 830.)

3. [B] *wherein the first integrated circuit includes at least a processing unit, and*

305. See element [A].

4. [C] *wherein the processing unit is configured to: determine an ambient sound level; and*

306. In Anderson, an auxiliary microphone of the RPU measures background noise "for the purpose of automatically setting hearing aid parameters". (EX1004, 7:10-13.) The POSITA would have understood this to include the RPU determining an ambient sound level (a background noise level) and setting the parameters based on that level.

5. [D] *amplify audio output from the first speaker dependent at least in part on the ambient sound level.*

307. See element [C]. One such hearing aid parameter, set by the RPU based on the ambient sound level, is the amplification level. (EX1004, 23:26-35.)

XVI. GROUND 11: CLAIMS 64-71 ARE RENDERED OBVIOUS BY ANDERSON IN VIEW OF LYNCH AND NEMIROVSKI

A. Motivation to Combine

308. The POSITA would have been motivated to combine the Anderson/Lynch system with Nemirovski with a reasonable expectation of success for the reasons described in Section VI.B.

B. Claim 64

1. [Preamble] *A personal audio system as recited in claim 24,*

309. See claim 24.

2. [A] *wherein the head-worn wearable electronic device comprises: a head-worn structure including at least a first microphone, a second microphone, a speaker and a processing unit;*

310. The head-worn device includes the RPU (processing unit) as described for claim 51[A]. It additionally includes internal and external microphones as described for claim 50[A] and [B] and a speaker as described for claim 24[A].

3. [B] ***wherein the first microphone is configured to pick up at least audio input from at least the user,***

311. See claim 50[A].

4. [C] ***wherein the second microphone is configured to pick up at least environmental audio input associated with an environment in the vicinity of the head-worn wearable electronic device, and***

312. See claim 50[B].

5. [D] ***wherein the processing unit is configured to process the audio input from at least the user via the first microphone to remove at least a portion of the environmental audio input associated with the environment picked up via the second microphone.***

313. See claim 12[A]. In the combination, the POSITA would understand subtracting the noise component to be performed by Anderson's RPU, which is the component that performs noise cancellation operations in binaural systems. (EX1004, 23:55-24:4.)

C. Claim 65

1. [Preamble] ***A personal audio system as recited in claim 64,***

314. See claim 64.

2. [A] ***wherein the audio input from at least the user picked-up via the first microphone includes at least a voice input, and***

315. See claim 12[A], *i.e.*, sound component S. (EX1005, 10:28-47.)

3. [B] *wherein the environmental audio input associated with the environment includes at least ambient noise.*

316. See claim 12[A], *i.e.*, noise component N. (EX1005, 10:28-47.)

D. Claim 66

1. [Preamble] *A personal audio system as recited in claim 64,*

317. See claim 64.

2. [A] *wherein the processing unit is configured to process the audio input from at least the user picked-up via the first microphone to remove at least a portion of the environmental audio input picked-up via the second microphone.*

318. See claim 12[A]; the operation is performed by the RPU as described for claim 64[D].

E. Claim 67

1. [Preamble] *A personal audio system as recited in claim 64,*

319. See claim 64.

2. [A] *wherein the first microphone is at least partially in the head-worn structure and is positioned so as to be directed towards the user of the head-worn structure, and*

320. See claim 50[A].

3. [B] ***wherein the second microphone is at least partially in the head-worn structure so as to be directed away from the user of the head-worn structure.***

321. See claim 50[B]. The external microphone can be disposed in a recess of the housing 30 and thus at least partially in the head-worn structure. (EX1005, 9:32-35.)

F. Claim 68

1. [Preamble] ***A personal audio system as recited in claim 67,***

322. See claim 67.

2. [A] ***wherein the processing unit is configured to process the audio input picked-up via at least the first microphone to remove at least a portion of the environmental audio input picked-up via the second microphone.***

323. See claim 66[A].

G. Claim 69

1. [Preamble] ***A personal audio system as recited in claim 68,***

324. See claim 68.

2. [A] ***wherein the audio input from at least the user includes at least a voice input, and***

325. See claim 65[A].

3. [B] ***wherein the environmental audio input includes at least ambient noise.***

326. See claim 65[B].

H. Claim 70

1. [Preamble] *A personal audio system as recited in claim 24,*

327. See claim 24.

2. [A] *wherein the head-worn wearable electronic device comprises: a head-worn structure comprising at least two microphones and a processing unit,*

328. See claim 64[A].

3. [B] *wherein the at least two microphones are configured to pick up (i) at least audio input from at least the user and (ii) at least environmental audio input associated with environmental sound in the vicinity of the head-worn structure, and*

329. See claim 50[A] and [B].

4. [C] *wherein the processing unit is configured to: determine an environmental sound level based on at least the environmental audio input; and*

330. See claim 64[D].

5. [D] *amplify at least a portion of the audio input from the first microphone, with the amplification being at least in part dependent on the environmental sound level.*

331. See claim 12[A]. Anderson teaches using the RPU to set the amplification level based on an ambient sound level, as described for claim 51[C] and [D]. (EX1004, 7:10-13, 23:26-35.) The POSITA would have understood that the environmental sound level is an ambient sound level and is determined as described for claim 12[A]. Further, the POSITA would have understood the

amplification level to amplify at least the sound component S, which is picked up by the first microphone and isolated as described for claim 12[A].

I. Claim 71

1. [Preamble] *A personal audio system as recited in claim 24,*

332. See claim 24.

2. [A] *wherein the head-worn wearable electronic device comprises at least a first microphone, a second microphone and a processing unit,*

333. See claim 70[A].

3. [B] *wherein the first microphone is configured to pick up at least audio sound from at least the user, wherein the second microphone is configured to pick up at least ambient noise associated with an environment in the vicinity of the head-worn wearable electronic device, and*

334. See claim 70[B].

4. [C] *wherein the processing unit is configured to: determine an ambient noise level based on at least the ambient noise; and*

335. See claim 70[C].

5. [D] *modify at least a portion of the audio sound picked-up via the first microphone, with the modification being at least in part dependent on the ambient noise level.*

336. See claim 70[D].

XVII. GROUND 12: CLAIM 72 IS RENDERED OBVIOUS BY ANDERSON IN VIEW OF LYNCH, NEMIROVSKI, AND BOZZONE

A. Claim 72

1. [Preamble] *A personal audio system as recited in claim 24,*

337. See claim 24.

2. [A] *wherein the head-worn wearable electronic device comprises at least a first microphone, a second microphone and a processing unit,*

338. See claim 70[A].

3. [B] *wherein the first microphone is configured to pick up at least audio sound from at least the user,*

339. See claim 70[B].

4. [C] *wherein the second microphone is configured to pick up at least ambient noise associated with an environment in the vicinity of the head-worn wearable electronic device,*

340. See claim 70[B].

5. [D] *wherein the processing unit is configured to: determine an ambient noise level based on at least the ambient noise; and*

341. See claim 70[C].

6. [E] *modify at least a portion of the audio sound picked-up via the first microphone, with the modification being at least in part dependent on the ambient noise level,*

342. See claim 70[D].

7. [F] ***wherein the head-worn wearable electronic device comprises at least a rechargeable battery and at least one conductive element,***

343. See claim 26[A].

8. [G] ***wherein the rechargeable battery is able to be electrically coupled via the at least one conductive element to a charging apparatus and charged when the head-worn wearable electronic device is placed within the charging apparatus,***

344. See claim 26[B].

9. [H] ***wherein the mobile communication device is configured to wirelessly communicate with the head-worn wearable electronic device over a wireless network, and***

345. See claim 27[A].

10. [I] ***wherein the mobile communication device is or includes a mobile phone,***

346. See claim 14[A].

11. [J] ***wherein the head-worn wearable electronic device is configured to receive a voice input via the first microphone, determine a requested operation from the voice input using voice recognition, and control an operation by the head-worn wearable electronic device based on the requested operation.***

347. See claim 53[B].

12. ***Motivation to Combine***

348. The POSITA would have been motivated to combine the teachings of Anderson, Lynch, Nemirovski, and Bozzone to meet the claim limitations with

reasonable expectation of success for the reasons described above in Sections VI.B, IX.B, and XIV.B.

XVIII. GROUND 13: CLAIMS 73 AND 74 ARE RENDERED OBVIOUS BY ANDERSON IN VIEW OF LYNCH, NEMIROVSKI, BOZZONE, AND IRVIN

A. Motivation to Combine

349. The POSITA would have been motivated to combine the teachings of Anderson, Lynch, Nemirovski, Bozzone, and Irvin to meet the claim limitations with reasonable expectation of success for the reasons described above in Sections VI.B, VIII.B, IX.B, and XIV.B.

B. Claim 73

1. [Preamble] *A personal audio system as recited in claim 72,*

350. See claim 72.

2. [A] *wherein the head-worn wearable electronic device comprises: an infrared emitter configured to at least direct infrared signals towards the user when the head-worn wearable electronic device is being worn;*

351. See claim 54[A].

3. [B] *an infrared detector configured to detect infrared radiation reflected back from the user when the head-worn wearable electronic device is being worn; and*

352. See claim 54[B].

4. [C] ***electronic circuitry configured to facilitate determining whether the head-worn wearable electronic device is being worn by the user based on at least the detected infrared radiation.***

353. See claim 55[A].

C. Claim 74

1. [Preamble] ***A personal audio system as recited in claim 73,***

354. See claim 73.

2. [A] ***wherein the electrical coupling of the at least one conductive element with the charging apparatus is supported by at least a magnetic element.***

355. See claim 26[C].

I declare that all statements made herein of my own knowledge are true and that all statements made on information and belief are believed to be true, and that these statements were made with knowledge that willful false statements and the like so made are punishable by fine or imprisonment, or both, under section 1001 of Title 18 of the United States Code.

Executed the 23rd of April, 2026 in Los Angeles, California.

Respectfully submitted,

Chris Kyriakakis