US011644693B2

(12) **United States Patent**
Howell et al.

(10) **Patent No.: US 11,644,693 B2**
(45) **Date of Patent: May 9, 2023**

(54) **WEARABLE AUDIO SYSTEM SUPPORTING ENHANCED HEARING SUPPORT**

(71) Applicant: **IngenioSpec, LLC**, San Jose, CA (US)

(72) Inventors: **Thomas A. Howell**, San Jose, CA (US); **David Chao**, Saratoga, CA (US); **C. Douglass Thomas**, Saratoga, CA (US); **Peter P. Tong**, Mountain View, CA (US)

(73) Assignee: **IngenioSpec, LLC**, San Jose, CA (US)

(*) Notice: Subject to any disclaimer, the term of this patent is extended or adjusted under 35 U.S.C. 154(b) by 0 days.

(21) Appl. No.: **17/873,104**

(22) Filed: **Jul. 25, 2022**

(65) **Prior Publication Data**

US 2022/0357599 A1 Nov. 10, 2022

Related U.S. Application Data

(63) Continuation of application No. 17/484,080, filed on Sep. 24, 2021, which is a continuation of application No. 16/574,254, filed on Sep. 18, 2019, now Pat. No. 11,204,512, which is a continuation of application No. 16/049,120, filed on Jul. 30, 2018, now Pat. No. 11,243,416, which is a continuation of application No. 15/375,423, filed on Dec. 12, 2016, now Pat. No.

(Continued)

(51) **Int. Cl.**

G02C 11/00	(2006.01)
G02C 5/00	(2006.01)
G02C 11/06	(2006.01)
G02C 5/14	(2006.01)

(52) **U.S. Cl.**

CPC ***G02C 11/10*** (2013.01); ***G02C 5/001*** (2013.01); ***G02C 5/14*** (2013.01); ***G02C 11/06*** (2013.01)

(58) **Field of Classification Search**

CPC G02C 1/00; G02C 11/10; G02C 11/06; G02C 5/001; G02C 5/02; G02C 5/14; G02C 5/22; G02C 5/146; G02B 27/01; G02B 27/017; G02B 27/0176

USPC 351/158, 41, 111, 121, 123, 124; 359/13, 359/629–633; 381/381, 327, 328, 370, 381/380

See application file for complete search history.

(56) **References Cited**

U.S. PATENT DOCUMENTS

320,558	A	6/1885	Hull
669,949	A	3/1901	Underwood

(Continued)

FOREIGN PATENT DOCUMENTS

CA	2 487 391	12/2003
CN	88203065	11/1988

(Continued)

OTHER PUBLICATIONS

Notice of Allowance for U.S. Appl. No. 11/183,269, dated Dec. 10, 2010.

(Continued)

Primary Examiner — Jie Lei

(57) **ABSTRACT**

Techniques for providing wearable electronic devices with electrical components are disclosed. The electrical components can provide electrical technology to eyewear to facilitate audio support including enhanced hearing. The electrical components can operate independently or together with other electrical components provided elsewhere. The wearable electronic devices with electronic components can, for example, provide audio output, audio enhancements, or event-related audio content.

76 Claims, 92 Drawing Sheets

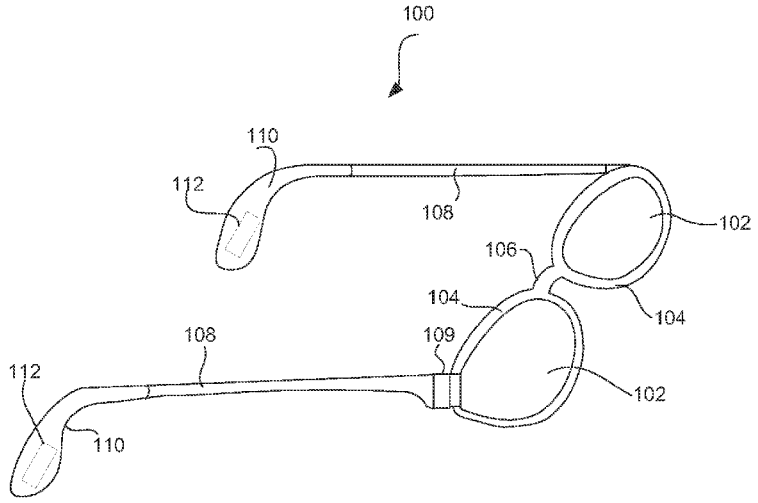

Related U.S. Application Data

10,061,144, which is a continuation of application No. 14/557,409, filed on Dec. 1, 2014, now Pat. No. 9,547,184, which is a continuation of application No. 13/955,336, filed on Jul. 31, 2013, now Pat. No. 8,905,542, which is a continuation of application No. 13/085,402, filed on Apr. 12, 2011, now Pat. No. 8,500,271, which is a continuation of application No. 11/183,269, filed on Jul. 15, 2005, now Pat. No. 7,922,321.

(60) Provisional application No. 60/647,826, filed on Jan. 31, 2005, provisional application No. 60/647,836, filed on Jan. 31, 2005, provisional application No. 60/620,238, filed on Oct. 18, 2004, provisional application No. 60/618,107, filed on Oct. 12, 2004, provisional application No. 60/605,191, filed on Aug. 28, 2004, provisional application No. 60/592,045, filed on Jul. 28, 2004.

(56) **References Cited**

U.S. PATENT DOCUMENTS

1,255,265	A	2/1918	Zachara
1,917,745	A	7/1933	Weiss
2,249,572	A	7/1941	Lieber
2,638,532	A	5/1953	Brady
2,794,085	A	5/1957	De Angelis
2,818,511	A	12/1957	Ullery et al.
2,830,132	A	4/1958	Borg
2,874,230	A	2/1959	Carlson
2,904,670	A	9/1959	Calmes
3,060,308	A	10/1962	Fortuna
3,104,290	A	9/1963	Rosemond et al.
3,119,903	A	1/1964	Rosemond et al.
3,597,054	A	8/1971	Winter
3,710,115	A	1/1973	Jubb
3,858,001	A	12/1974	Bonne
3,883,701	A	5/1975	Delorenzo
4,165,487	A	8/1979	Corderman
4,254,451	A	3/1981	Cochran, Jr.
4,283,127	A	8/1981	Rosenwinkel et al.
4,322,585	A	3/1982	Liautaud
4,348,664	A	9/1982	Boschetti et al.
4,389,217	A	6/1983	Baughman et al.
4,526,473	A	7/1985	Zahn, III
4,535,244	A	8/1985	Burnham
4,608,492	A	8/1986	Burnham
4,683,587	A	7/1987	Silverman
4,751,691	A	6/1988	Perera
4,757,714	A	7/1988	Purdy et al.
4,773,095	A	9/1988	Zwicker et al.
4,806,011	A	2/1989	Bettinger
4,822,160	A	4/1989	Tsai
4,822,161	A	4/1989	Jimmy
4,851,686	A	7/1989	Pearson
4,856,086	A	8/1989	McCullough
4,859,047	A	8/1989	Badewitz
4,882,769	A	11/1989	Gallimore
4,904,078	A	2/1990	Gorike
4,942,629	A	7/1990	Stadlmann
4,962,469	A	10/1990	Ono et al.
4,967,268	A	10/1990	Lipton et al.
4,985,632	A	1/1991	Bianco et al.
5,008,548	A	4/1991	Gat
5,015,086	A	5/1991	Okaue et al.
5,020,150	A	5/1991	Shannon
5,026,151	A	6/1991	Waltuck et al.
5,036,311	A	7/1991	Moran et al.
5,050,150	A	9/1991	Ikeda
5,064,410	A	11/1991	Frenkel et al.
5,093,576	A	3/1992	Edmond et al.
5,106,179	A	4/1992	Kamaya et al.
5,144,344	A	9/1992	Takahashi et al.
5,148,023	A	9/1992	Hayashi et al.
5,151,600	A	9/1992	Black
5,161,250	A	11/1992	Ianna et al.
5,172,256	A	12/1992	Sethofer et al.
5,264,877	A	11/1993	Hussey
5,306,917	A	4/1994	Black et al.
5,353,378	A	10/1994	Hoffman et al.
5,359,370	A	10/1994	Mugnier
5,359,444	A	10/1994	Piosenka et al.
5,367,345	A	11/1994	da Silva
5,379,464	A	1/1995	Schleger et al.
5,382,986	A	1/1995	Black et al.
5,394,005	A	2/1995	Brown et al.
5,452,026	A	9/1995	Marcy, III
5,452,480	A	9/1995	Ryden
5,455,637	A	10/1995	Kallman et al.
5,455,640	A	10/1995	Gertsikov
5,457,751	A	10/1995	Such
5,463,428	A	10/1995	Lipton et al.
5,475,798	A	12/1995	Handlos
5,500,532	A	3/1996	Kozicki
D369,167	S	4/1996	Hanson et al.
5,510,961	A	4/1996	Peng
5,513,384	A	4/1996	Brennan et al.
5,519,781	A	5/1996	Kukurudza
5,533,130	A	7/1996	Staton
5,541,641	A	7/1996	Shimada
5,581,090	A	12/1996	Goudjil
5,585,871	A	12/1996	Linden
5,589,398	A	12/1996	Krause et al.
5,590,417	A	12/1996	Rydbeck
5,606,743	A	2/1997	Vogt et al.
5,608,808	A	3/1997	da Silva
5,634,201	A	5/1997	Mooring
5,671,035	A	9/1997	Barnes
5,686,727	A	11/1997	Reenstra et al.
5,694,475	A	12/1997	Boyden
5,715,323	A	2/1998	Walker
5,737,436	A	4/1998	Boyden et al.
5,777,715	A	7/1998	Kruegle et al.
5,818,381	A	10/1998	Williams
5,819,183	A	10/1998	Voroba et al.
5,835,185	A	11/1998	Kallman et al.
5,900,720	A	5/1999	Kallman et al.
5,903,395	A	5/1999	Rallison et al.
5,923,398	A	7/1999	Goldman
5,941,837	A	8/1999	Amano et al.
5,946,071	A	8/1999	Feldman
5,949,516	A	9/1999	McCurdy
5,966,746	A	10/1999	Reedy et al.
5,980,037	A	11/1999	Conway
5,988,812	A	11/1999	Wingate
5,991,085	A	11/1999	Rallison et al.
5,992,996	A	11/1999	Sawyer
5,995,592	A	11/1999	Shirai et al.
6,010,216	A	1/2000	Jesiek
6,013,919	A	1/2000	Schneider et al.
6,028,627	A	2/2000	Helmsderfer
6,046,455	A	4/2000	Ribi et al.
6,060,321	A	5/2000	Hovorka
6,061,580	A	5/2000	Altschul et al.
6,091,546	A	7/2000	Spitzer
6,091,832	A	7/2000	Shurman et al.
6,115,177	A	9/2000	Vossler
6,132,681	A	10/2000	Faran et al.
6,145,983	A	11/2000	Schiffer
6,154,552	A	11/2000	Koroljow et al.
6,176,576	B1	1/2001	Green et al.
6,225,897	B1	5/2001	Doyle et al.
6,231,181	B1	5/2001	Swab
6,236,969	B1	5/2001	Ruppert et al.
6,243,578	B1	6/2001	Koike
6,259,367	B1	7/2001	Klein
6,270,466	B1	8/2001	Weinstein et al.
6,292,213	B1	9/2001	Jones
6,292,685	B1	9/2001	Pompei
6,301,050	B1	10/2001	DeLeon
6,301,367	B1	10/2001	Boyden et al.
6,307,526	B1	10/2001	Mann

(56) **References Cited**

U.S. PATENT DOCUMENTS

6,311,155	B1	10/2001	Vaudrey et al.
6,343,858	B1	2/2002	Zelman
6,346,929	B1	2/2002	Fukushima et al.
6,349,001	B1	2/2002	Spitzer
6,349,422	B1	2/2002	Schleger et al.
6,409,335	B1	6/2002	Lipawsky
6,409,338	B1	6/2002	Jewell
6,426,719	B1	7/2002	Nagareda et al.
6,431,705	B1	8/2002	Linden
6,474,816	B2	11/2002	Butler et al.
6,478,736	B1	11/2002	Mault
6,506,142	B2	1/2003	Itoh et al.
6,511,175	B2	1/2003	Hay et al.
6,513,532	B2	2/2003	Mault et al.
6,517,203	B1	2/2003	Blum et al.
6,539,336	B1	3/2003	Vock et al.
6,542,081	B2	4/2003	Torch
6,546,101	B1	4/2003	Murray et al.
6,554,763	B1	4/2003	Amano et al.
6,582,075	B1	6/2003	Swab et al.
6,619,799	B1	9/2003	Blum et al.
6,629,076	B1	9/2003	Haken
6,678,381	B1	1/2004	Manabe
6,717,737	B1	4/2004	Haglund
6,729,726	B2	5/2004	Miller et al.
6,736,759	B1	5/2004	Stubbs et al.
6,764,194	B1	7/2004	Cooper
6,769,767	B2	8/2004	Swab et al.
6,771,423	B2	8/2004	Geist
6,788,309	B1	9/2004	Swan et al.
6,792,401	B1	9/2004	Nigro et al.
6,816,314	B2	11/2004	Shimizu et al.
6,824,265	B1	11/2004	Harper
6,857,741	B2	2/2005	Blum et al.
6,871,951	B2	3/2005	Blum et al.
6,879,930	B2	4/2005	Sinclair et al.
6,912,386	B1	6/2005	Himberg et al.
6,929,365	B2	8/2005	Swab et al.
6,932,090	B1	8/2005	Reschke et al.
6,947,219	B1	9/2005	Ou
7,004,582	B2	2/2006	Jannard et al.
7,013,009	B2	3/2006	Warren
7,023,594	B2	4/2006	Blum et al.
7,030,902	B2	4/2006	Jacobs
7,031,667	B2	4/2006	Horiguchi
7,033,025	B2	4/2006	Winterbotham
7,059,717	B2	6/2006	Bloch
7,073,905	B2	7/2006	Da Pra'
7,079,876	B2	7/2006	Levy
7,123,215	B2	10/2006	Nakada
7,192,136	B2	3/2007	Howell et al.
7,255,437	B2	8/2007	Howell et al.
7,265,358	B2	9/2007	Fontaine
7,274,292	B2	9/2007	Velhal et al.
7,289,767	B2	10/2007	Lai
7,312,699	B2	12/2007	Chornenky
7,331,666	B2	2/2008	Swab et al.
7,376,238	B1	5/2008	Rivas et al.
7,380,936	B2	6/2008	Howell et al.
7,401,918	B2	7/2008	Howell et al.
7,405,801	B2	7/2008	Jacobs
7,429,965	B2	9/2008	Weiner
7,438,409	B2	10/2008	Jordan
7,438,410	B1	10/2008	Howell et al.
7,445,332	B2	11/2008	Jannard et al.
7,481,531	B2	1/2009	Howell et al.
7,500,746	B1	3/2009	Howell et al.
7,500,747	B2	3/2009	Howell et al.
7,512,414	B2	3/2009	Jannard et al.
7,517,083	B2	4/2009	Blum et al.
7,527,374	B2	5/2009	Chou
7,543,934	B2	6/2009	Howell et al.
7,581,833	B2	9/2009	Howell et al.
7,621,634	B2	11/2009	Howell et al.
7,648,236	B1	1/2010	Dobson
7,677,723	B2	3/2010	Howell et al.
7,760,898	B2	7/2010	Howell et al.
7,771,046	B2	8/2010	Howell et al.
7,792,552	B2	9/2010	Thomas et al.
7,801,570	B2	9/2010	Cheung et al.
7,806,525	B2	10/2010	Howell et al.
7,922,321	B2	4/2011	Howell et al.
7,976,159	B2	7/2011	Jacobs et al.
8,109,629	B2	2/2012	Howell et al.
8,142,015	B2	3/2012	Paolino
8,174,569	B2	5/2012	Tanijiri et al.
8,337,013	B2	12/2012	Howell et al.
8,430,507	B2	4/2013	Howell et al.
8,434,863	B2	5/2013	Howell et al.
8,465,151	B2	6/2013	Howell et al.
8,485,661	B2	7/2013	Yoo et al.
8,500,271	B2	8/2013	Howell et al.
8,770,742	B2	7/2014	Howell et al.
8,849,185	B2	9/2014	Cheung et al.
8,905,542	B2	12/2014	Howell et al.
9,033,493	B2	5/2015	Howell et al.
9,244,292	B2	1/2016	Swab et al.
9,400,390	B2	7/2016	Osterhout et al.
9,405,135	B2	8/2016	Sweis et al.
9,488,520	B2	11/2016	Howell et al.
9,547,184	B2	1/2017	Howell et al.
9,690,121	B2	6/2017	Howell et al.
9,922,236	B2	3/2018	Moore et al.
10,042,186	B2	8/2018	Chao et al.
10,060,790	B2	8/2018	Howell et al.
10,061,144	B2	8/2018	Howell et al.
10,310,296	B2	6/2019	Howell et al.
10,345,625	B2	7/2019	Howell et al.
10,359,311	B2	7/2019	Howell et al.
10,515,623	B1	12/2019	Grizzel
10,539,459	B2	1/2020	Howell et al.
10,571,715	B2	2/2020	Rizzo, III et al.
10,624,790	B2	4/2020	Chao et al.
10,777,048	B2	9/2020	Howell et al.
10,802,582	B1	10/2020	Clements
10,964,190	B2	3/2021	Peyrard
11,042,045	B2	6/2021	Chao et al.
11,069,358	B1	7/2021	Harper
11,086,147	B2	8/2021	Howell et al.
11,204,512	B2	12/2021	Howell et al.
11,243,416	B2	2/2022	Howell et al.
11,326,941	B2	5/2022	Howell et al.
11,513,371	B2	11/2022	Howell et al.
11,536,988	B2	12/2022	Howell et al.
2001/0005230	A1	6/2001	Ishikawa
2001/0028309	A1	10/2001	Torch
2001/0050754	A1	12/2001	Hay et al.
2002/0017997	A1	2/2002	Felkowitz
2002/0021407	A1	2/2002	Elliott
2002/0081982	A1	6/2002	Schwartz et al.
2002/0084990	A1	7/2002	Peterson, III
2002/0089639	A1	7/2002	Starner et al.
2002/0090103	A1	7/2002	Calisto, Jr.
2002/0098877	A1	7/2002	Glezerman
2002/0101568	A1	8/2002	Eberl et al.
2002/0109600	A1	8/2002	Mault et al.
2002/0136414	A1	9/2002	Jordan et al.
2002/0140899	A1	10/2002	Blum et al.
2002/0159023	A1	10/2002	Swab
2002/0197961	A1	12/2002	Warren
2003/0018274	A1	1/2003	Takahashi et al.
2003/0022690	A1	1/2003	Beyda et al.
2003/0032449	A1	2/2003	Giobbi
2003/0062046	A1	4/2003	Wiesmann et al.
2003/0064746	A1	4/2003	Rader et al.
2003/0065257	A1	4/2003	Mault et al.
2003/0067585	A1	4/2003	Miller et al.
2003/0068057	A1	4/2003	Miller et al.
2003/0083591	A1	5/2003	Edwards et al.
2003/0091200	A1	5/2003	Pompei
2003/0214630	A1	11/2003	Winterbotham
2003/0226978	A1	12/2003	Ribi et al.
2003/0231293	A1	12/2003	Blum et al.
2004/0000733	A1	1/2004	Swab et al.

(56) **References Cited**

U.S. PATENT DOCUMENTS

2004/0005069	A1	1/2004	Buck
2004/0029582	A1	2/2004	Swab et al.
2004/0059212	A1	3/2004	Abreu
2004/0063378	A1	4/2004	Nelson
2004/0096078	A1	5/2004	Lin
2004/0100384	A1	5/2004	Chen et al.
2004/0101178	A1	5/2004	Fedorovskaya et al.
2004/0104864	A1	6/2004	Nakada
2004/0114770	A1	6/2004	Pompei
2004/0128737	A1	7/2004	Gesten
2004/0150986	A1	8/2004	Chang
2004/0156012	A1	8/2004	Jannard et al.
2004/0157649	A1	8/2004	Jannard et al.
2004/0160571	A1	8/2004	Jannard
2004/0160572	A1	8/2004	Jannard
2004/0160573	A1	8/2004	Jannard et al.
2004/0197002	A1	10/2004	Atsumi et al.
2004/0227219	A1	11/2004	Su
2005/0036103	A1	2/2005	Bloch
2005/0067580	A1	3/2005	Fontaine
2005/0078274	A1	4/2005	Howell et al.
2005/0088365	A1	4/2005	Yamazaki et al.
2005/0201585	A1	9/2005	Jannard et al.
2005/0213026	A1	9/2005	Da Pra'
2005/0230596	A1	10/2005	Howell et al.
2005/0238194	A1	10/2005	Chornenky
2005/0239502	A1	10/2005	Swab et al.
2005/0248717	A1	11/2005	Howell et al.
2005/0248718	A1	11/2005	Howell et al.
2005/0248719	A1	11/2005	Howell et al.
2005/0264752	A1	12/2005	Howell et al.
2005/0278446	A1	12/2005	Bryant
2006/0001827	A1	1/2006	Howell et al.
2006/0003803	A1	1/2006	Thomas et al.
2006/0023158	A1	2/2006	Howell et al.
2006/0034478	A1	2/2006	Davenport
2006/0107822	A1	5/2006	Bowen
2006/0132382	A1	6/2006	Jannard
2006/0291667	A1	12/2006	Watanabe et al.
2007/0030442	A1	2/2007	Howell et al.
2007/0035830	A1	2/2007	Matveev et al.
2007/0046887	A1	3/2007	Howell et al.
2007/0055888	A1	3/2007	Miller et al.
2007/0098192	A1	5/2007	Sipkema
2007/0109491	A1	5/2007	Howell et al.
2007/0186330	A1	8/2007	Howell et al.
2007/0189548	A1	8/2007	Croft
2007/0200927	A1	8/2007	Krenik
2007/0208531	A1	9/2007	Darley et al.
2007/0211574	A1	9/2007	Croft
2007/0248238	A1	10/2007	Abreu et al.
2007/0270663	A1	11/2007	Ng et al.
2007/0271065	A1	11/2007	Gupta et al.
2007/0271116	A1	11/2007	Wysocki et al.
2007/0271387	A1	11/2007	Lydon et al.
2007/0279584	A1	12/2007	Howell et al.
2008/0062338	A1	3/2008	Herzog et al.
2008/0068559	A1	3/2008	Howell et al.
2008/0089545	A1	4/2008	Jannard et al.
2008/0100792	A1	5/2008	Blum et al.
2008/0144854	A1	6/2008	Abreu
2008/0151175	A1	6/2008	Gross
2008/0151179	A1	6/2008	Howell et al.
2008/0158506	A1	7/2008	Fuziak
2008/0211921	A1	9/2008	Sako et al.
2008/0218684	A1	9/2008	Howell et al.
2008/0262392	A1	10/2008	Ananny et al.
2008/0278678	A1	11/2008	Howell et al.
2009/0059159	A1	3/2009	Howell et al.
2009/0059381	A1	3/2009	Jannard
2009/0073375	A1	3/2009	Nakada
2009/0141233	A1	6/2009	Howell et al.
2009/0147215	A1	6/2009	Howell et al.
2009/0156128	A1	6/2009	Franson et al.
2009/0251660	A1	10/2009	Figler et al.
2009/0251661	A1	10/2009	Fuziak, Jr.
2009/0296044	A1	12/2009	Howell et al.
2010/0045928	A1	2/2010	Levy
2010/0061579	A1	3/2010	Rickards et al.
2010/0079356	A1	4/2010	Hoellwarth
2010/0105445	A1	4/2010	Brunton et al.
2010/0110368	A1	5/2010	Chaum
2010/0245754	A1	9/2010	Matsumoto et al.
2010/0296045	A1	11/2010	Agnoli et al.
2010/0309426	A1	12/2010	Howell et al.
2011/0102734	A1	5/2011	Howell et al.
2011/0164122	A1	7/2011	Hardacker
2011/0187990	A1	8/2011	Howell et al.
2011/0241976	A1	10/2011	Boger et al.
2011/0273365	A1	11/2011	West et al.
2012/0033061	A1	2/2012	Ko et al.
2012/0050668	A1	3/2012	Howell et al.
2012/0062357	A1	3/2012	Slamka
2012/0101411	A1	4/2012	Hausdorff et al.
2012/0133885	A1	5/2012	Howell et al.
2012/0176580	A1	7/2012	Sonsino
2013/0072828	A1	3/2013	Sweis et al.
2013/0077175	A1	3/2013	Hotta et al.
2013/0143519	A1	6/2013	Doezema
2013/0172691	A1	7/2013	Tran
2013/0201440	A1	8/2013	Howell et al.
2013/0308089	A1	11/2013	Howell et al.
2014/0132913	A1	5/2014	Sweis et al.
2014/0176902	A1	6/2014	Sweis et al.
2014/0198293	A1	7/2014	Sweis et al.
2014/0226838	A1	8/2014	Wingate et al.
2014/0268008	A1	9/2014	Howell et al.
2014/0268013	A1	9/2014	Howell et al.
2014/0268017	A1	9/2014	Sweis et al.
2014/0361185	A1	12/2014	Howell et al.
2015/0085245	A1	3/2015	Howell et al.
2015/0230988	A1	8/2015	Chao et al.
2015/0253590	A1	9/2015	Howell et al.
2015/0277123	A1	10/2015	Chaum et al.
2015/0338677	A1	11/2015	Block
2016/0098874	A1	4/2016	Handville et al.
2016/0246075	A9	8/2016	Howell et al.
2016/0302992	A1	10/2016	Sweis et al.
2017/0068117	A9	3/2017	Howell et al.
2017/0074721	A1	3/2017	Howell et al.
2017/0090219	A1	3/2017	Howell et al.
2017/0131575	A1	5/2017	Howell et al.
2017/0146829	A1	5/2017	Howell et al.
2017/0303187	A1	10/2017	Crouthamel et al.
2018/0122208	A1	5/2018	Peyrard
2018/0314079	A1	11/2018	Chao et al.
2018/0335650	A1	11/2018	Howell et al.
2018/0348050	A1	12/2018	Howell et al.
2019/0004325	A1	1/2019	Connor
2019/0033622	A1	1/2019	Olgun et al.
2019/0033623	A1	1/2019	Howell et al.
2019/0187492	A1	6/2019	Howell et al.
2019/0272800	A1	9/2019	Tao et al.
2019/0278110	A1	9/2019	Howell et al.
2019/0285913	A1	9/2019	Howell et al.
2019/0310132	A1	10/2019	Howell et al.
2019/0318589	A1	10/2019	Howell et al.
2019/0369402	A1	12/2019	Woodman et al.
2019/0378493	A1	12/2019	Kim et al.
2019/0387351	A1	12/2019	Lyren et al.
2020/0012127	A1	1/2020	Howell et al.
2020/0218094	A1	7/2020	Howell et al.
2020/0364992	A1	11/2020	Howell et al.
2021/0000347	A1	1/2021	Stump
2021/0026146	A1	1/2021	Harder et al.
2021/0271116	A1	9/2021	Chao et al.
2021/0364827	A9	11/2021	Howell et al.
2021/0364828	A1	11/2021	Howell et al.
2021/0379425	A1	12/2021	Tran
2022/0008763	A1	1/2022	Saleh et al.
2022/0011603	A1	1/2022	Howell et al.
2022/0034542	A1	2/2022	Peters et al.
2022/0054092	A1	2/2022	Howell et al.
2022/0178743	A1	6/2022	Howell et al.

(56) **References Cited**

U.S. PATENT DOCUMENTS

2022/0335792	A1	10/2022	Howell et al.
2022/0415388	A1	12/2022	Yim et al.
2023/0017634	A1	1/2023	Howell et al.
2023/0033660	A1	2/2023	Howell et al.
2023/0057654	A1	2/2023	Howell et al.

FOREIGN PATENT DOCUMENTS

CN	89214222.7		3/1990
CN	90208199.3		11/1990
DE	10123226	A1	11/2002
EP	1134491	A2	9/2001
EP	1027626	B1	3/2016
EP	2290433	B1	4/2016
FR	2530039	A1	1/1984
GB	1467982		3/1977
JP	58-113912		7/1983
JP	58-113914		7/1983
JP	02-181722		7/1990
JP	09-017204		1/1997
JP	10-161072		6/1998
JP	2000-039595		2/2000
JP	20022511706	A	4/2002
JP	2002 341059	A	11/2002
JP	2005-151292		6/2005
JP	2005-167902		6/2005
KR	2002-0044416	A	6/2002
TW	484711		6/2001
WO	WO 97/12205	A1	4/1997
WO	WO 99/50706	A1	10/1999
WO	WO 2001/06298	A1	1/2001
WO	WO 01/24576	A1	4/2001
WO	WO 2002/06881	A2	1/2002
WO	WO 2003/069394	A1	8/2003
WO	WO 2003/100368	A1	12/2003
WO	WO 2003/100503	A2	12/2003
WO	WO 2004/012477	A2	2/2004
WO	WO 2004/025554	A1	3/2004

OTHER PUBLICATIONS

Office Action for U.S. Appl. No. 11/183,269, dated May 25, 2010.
Final Office Action for U.S. Appl. No. 11/183,269, dated Feb. 17, 2010.
Office Action for U.S. Appl. No. 11/183,269, dated Jun. 23, 2009.
Office Action for U.S. Appl. No. 11/183,269, dated Dec. 4, 2008.
Final Office Action for U.S. Appl. No. 11/183,269, dated Jun. 5, 2008.
Office Action for U.S. Appl. No. 11/183,269, dated Oct. 18, 2007.
Restriction Requirement for U.S. Appl. No. 11/183,269, dated Jun. 25, 2007.
Office Action for U.S. Appl. No. 13/085,402, dated Apr. 19, 2012.
Notice of Allowance for U.S. Appl. No. 13/085,402, dated Aug. 2, 2012.
Notice of Allowance for U.S. Appl. No. 13/085,402, dated Nov. 13, 2012.
Notice of Allowance for U.S. Appl. No. 13/085,402, dated Feb. 20, 2013.
Notice of Allowance for U.S. Appl. No. 13/085,402, dated Jun. 14, 2013.
Office Action for U.S. Appl. No. 13/955,336, dated Dec. 5, 2013.
Notice of Allowance for U.S. Appl. No. 13/955,336, dated Apr. 28, 2014.
Notice of Allowance for U.S. Appl. No. 13/955,336, dated Aug. 18, 2014.
Notice of Allowance for U.S. Appl. No. 13/955,336, dated Oct. 7, 2014.
Notice of Allowance for U.S. Appl. No. 13/955,336, dated Nov. 3, 2014.
Office Action for U.S. Appl. No. 14/557,409, dated Jun. 11, 2015.
Notice of Allowance for U.S. Appl. No. 14/557,409, dated Jan. 14, 2016.
Notice of Allowance for U.S. Appl. No. 14/557,409, dated Apr. 28, 2016.
Notice of Allowance for U.S. Appl. No. 14/557,409, dated Aug. 8, 2016.
Notice of Allowance for U.S. Appl. No. 14/557,409, dated Nov. 4, 2016.
Corrected Notice of Allowance for U.S. Appl. No. 14/557,409, dated Dec. 12, 2016.
Office Action for U.S. Appl. No. 15/375,423, dated Mar. 27, 2017.
Notice of Allowance for U.S. Appl. No. 15/375,423, dated Jul. 5, 2017.
Notice of Allowance for U.S. Appl. No. 15/375,423, dated Oct. 31, 2017.
Notice of Allowance for U.S. Appl. No. 15/375,423, dated Mar. 23, 2018.
Notice of Allowance for U.S. Appl. No. 15/375,423, dated Jul. 13, 2018.
Office Action for U.S. Appl. No. 16/049,120, dated Feb. 28, 2020.
Notice of Allowance for U.S. Appl. No. 16/049,120, dated Jun. 3, 2020.
Notice of Allowance for U.S. Appl. No. 16/049,120, dated Sep. 21, 2020.
Notice of Allowance for U.S. Appl. No. 16/049,120, dated Feb. 23, 2021.
Notice of Allowance for U.S. Appl. No. 16/049,120, dated Jun. 3, 2021.
Notice of Allowance for U.S. Appl. No. 16/049,120, dated Sep. 20, 2021.
Notice of Allowance for U.S. Appl. No. 16/574,254, dated Apr. 16, 2021.
Notice of Allowance for U.S. Appl. No. 16/574,254, dated Aug. 9, 2021.
Office Action for U.S. Appl. No. 16/821,810, dated Feb. 2, 2022.
Notice of Allowance for U.S. Appl. No. 16/821,810, dated Apr. 6, 2022.
Office Action for U.S. Appl. No. 17/484,080, dated Jan. 21, 2022.
Notice of Allowance for U.S. Appl. No. 17/484,080, dated May 31, 2022.
Restriction Requirement for U.S. Appl. No. 11/580,222, dated Jun. 18, 2008.
Office Action for U.S. Appl. No. 11/580,222, dated Sep. 12, 2008.
Office Action for U.S. Appl. No. 11/580,222, dated Jan. 28, 2009.
Notice of Allowance for U.S. Appl. No. 11/580,222, dated Apr. 20, 2009.
U.S. Appl. No. 12/462,286, filed Jul. 31, 2009.
Restriction Requirement for U.S. Appl. No. 12/462,286, dated Sep. 17, 2010.
Office Action for U.S. Appl. No. 12/462,286, dated Jan. 13, 2011.
Notice of Allowance for U.S. Appl. No. 12/462,286, dated Jun. 24, 2011.
Notice of Allowance for U.S. Appl. No. 12/462,286, dated Nov. 22, 2011.
Office Action for U.S. Appl. No. 13/367,346, dated May 15, 2013.
Notice of Allowance for U.S. Appl. No. 13/367,346, dated Oct. 10, 2013.
Office Action for U.S. Appl. No. 13/367,346, dated Jan. 28, 2014.
Notice of Allowance for U.S. Appl. No. 13/367,346, dated Aug. 15, 2014.
Notice of Allowance for U.S. Appl. No. 13/367,346, dated Mar. 19, 2015.
Office Action ffor U.S. Appl. No. 14/715,501, dated Sep. 23, 2015.
Office Action for U.S. Appl. No. 14/715,501, dated Mar. 25, 2016.
Office Action for U.S. Appl. No. 14/715,501, dated Oct. 17, 2016.
Office Action for U.S. Appl. No. 14/715,501, dated Jul. 20, 2017.
Office Action for U.S. Appl. No. 14/715,501, dated Jan. 8, 2018.
Notice of Allowance for U.S. Appl. No. 14/715,501, dated May 9, 2018.
Notice of Allowance for U.S. Appl. No. 14/715,501, dated Sep. 11, 2018.
Office Action for U.S. Appl. No. 16/127,957, dated Jun. 4, 2020.
Office Action for U.S. Appl. No. 16/127,957, dated Sep. 30, 2020.

(56) **References Cited**

OTHER PUBLICATIONS

Notice of Allowance for U.S. Appl. No. 16/127,957, dated Dec. 21, 2020.
Notice of Allowance for U.S. Appl. No. 17/395,509, dated May 6, 2022.
Notice of Allowance for U.S. Appl. No. 16/182,969, dated Jan. 28, 2022.
Office Action for U.S. Appl. No. 16/182,969, dated Jun. 24, 2020.
Notice of Allowance for U.S. Appl. No. 16/182,969, dated Oct. 14, 2020.
Notice of Allowance for U.S. Appl. No. 16/182,969, dated Sep. 1, 2021.
U.S. Appl. No. 12/806,312, filed Aug. 10, 2010.
Office Action for U.S. Appl. No. 12/806,312, dated Apr. 20, 2012.
Office Action for U.S. Appl. No. 12/806,312, dated Sep. 25, 2012.
Notice of Allowance for U.S. Appl. No. 12/806,312, dated Dec. 14, 2012.
Notice of Allowance for U.S. Appl. No. 12/806,312, dated Mar. 29, 2013.
U.S. Appl. No. 13/831,512, filed Mar. 14, 2013.
Office Action for U.S. Appl. No. 13/831,512, dated Jun. 4, 2013.
Office Action for U.S. Appl. No. 13/831,512, dated Feb. 24, 2014.
Office Action for U.S. Appl. No. 13/831,512, dated Jul. 2, 2014.
Office Action for U.S. Appl. No. 13/831,512, dated Jan. 21, 2015.
Office Action for U.S. Appl. No. 13/831,512, dated May 29, 2015.
Office Action for U.S. Appl. No. 13/831,512, dated Feb. 24, 2016.
Notice of Allowance for U.S. Appl. No. 13/831,512, dated Aug. 1, 2016.
Notice of Allowance for U.S. Appl. No. 13/831,512, dated Oct. 25, 2016.
Notice of Allowance for U.S. Appl. No. 13/831,512, dated Jan. 30, 2017.
Notice of Allowance for U.S. Appl. No. 13/831,512, dated Feb. 21, 2017.
Office Action for U.S. Appl. No. 15/396,428, dated Feb. 16, 2018.
Office Action for U.S. Appl. No. 15/396,428, dated Jun. 21, 2018.
Office Action for U.S. Appl. No. 15/409,723, dated Apr. 23, 2018.
Office Action for U.S. Appl. No. 15/409,723, dated Oct. 31, 2018.
Notice of Allowance for U.S. Appl. No. 11/183,256, dated Jan. 13, 2009.
Office Action for U.S. Appl. No. 11/183,256, dated Sep. 12, 2008.
Notice of Allowance for U.S. Appl. No. 11/183,256, dated Jul. 8, 2008.
Office Action for U.S. Appl. No. 11/183,256, dated Jan. 25, 2008.
Restriction Requirement for U.S. Appl. No. 11/183,256, dated Oct. 17, 2007.
Restriction Requirement for U.S. Appl. No. 11/183,256, dated Jun. 28, 2007.
Notice of Allowance for U.S. Appl. No. 11/546,685, dated Feb. 17, 2010.
Notice of Allowance for U.S. Appl. No. 11/546,685, dated Sep. 18, 2009.
Office Action for U.S. Appl. No. 11/546,685, dated Mar. 5, 2009.
Restriction Requirement for U.S. Appl. No. 11/546,685, dated Jan. 27, 2009.
U.S. Appl. No. 12/803,732, filed Jul. 1, 2010.
Notice of Allowance for U.S. Appl. No. 12/803,732, dated Sep. 1, 2011.
Notice of Allowance for U.S. Appl. No. 12/803,732, dated Nov. 15, 2011.
Notice of Allowance for U.S. Appl. No. 12/803,732, dated Jan. 30, 2012.
Notice of Allowance for U.S. Appl. No. 12/803,732, dated Apr. 17, 2012.
Notice of Allowance for U.S. Appl. No. 12/803,732, dated Jul. 5, 2012.
Notice of Allowance for U.S. Appl. No. 12/803,732, dated Oct. 19, 2012.
Notice of Allowance for U.S. Appl. No. 12/803,732, dated Feb. 13, 2013.
Office Action for U.S. Appl. No. 13/291,020, dated Jun. 4, 2012.
Office Action for U.S. Appl. No. 13/291,020, dated Apr. 23, 2012.
Notice of Allowance for U.S. Appl. No. 13/291,020, dated Aug. 2, 2012.
Notice of Allowance for U.S. Appl. No. 13/291,020, dated Nov. 2, 2012.
Notice of Allowance for U.S. Appl. No. 13/291,020, dated Feb. 11, 2013.
U.S. Appl. No. 13/831,419, filed Mar. 14, 2013.
Office Action for U.S. Appl. No. 13/831,419, dated Apr. 27, 2015.
Office Action for U.S. Appl. No. 13/831,419, dated Aug. 12, 2015.
Notice of Allowance for U.S. Appl. No. 13/831,419, dated Jan. 28, 2016.
Office Action for U.S. Appl. No. 13/831,419, dated Apr. 28, 2016.
Office Action for U.S. Appl. No. 13/831,419, dated Nov. 17, 2016.
Office Action for U.S. Appl. No. 13/831,419, dated Feb. 1, 2017.
Notice of Allowance for U.S. Appl. No. 13/831,419, dated Jun. 6, 2017.
Office Action for U.S. Appl. No. 13/831,419, dated Oct. 20, 2017.
Office Action for U.S. Appl. No. 13/831,419, dated Jun. 8, 2018.
U.S. Appl. No. 13/831,445, filed Mar. 14, 2013.
Office Action for U.S. Appl. No. 13/831,445, dated Feb. 20, 2015.
Notice of Allowance for U.S. Appl. No. 13/831,445, dated Oct. 21, 2016.
Notice of Allowance for U.S. Appl. No. 13/831,445, dated Jan. 9, 2017.
Corrected Notice of Allowance for U.S. Appl. No. 13/831,445, dated Jan. 23, 2017.
Notice of Allowance for U.S. Appl. No. 13/831,445, dated Apr. 25, 2017.
Office Action for U.S. Appl. No. 13/831,445, dated Feb. 6, 2018.
Notice of Allowance for U.S. Appl. No. 13/831,445, dated Aug. 8, 2018.
Office Action for U.S. Appl. No. 16/429,181, dated Sep. 30, 2020.
Notice of Allowance for U.S. Appl. No. 16/429,181, dated Feb. 1, 2021.
Notice of Allowance for U.S. Appl. No. 16/429,181, dated Jun. 17, 2021.
Notice of Allowance for U.S. Appl. No. 16/429,181, dated Aug. 19, 2021.
Notice of Allowance for U.S. Appl. No. 16/429,181, dated Oct. 4, 2021.
Office Action for U.S. Appl. No. 16/429,181, dated Feb. 9, 2022.
Office Action for U.S. Appl. No. 16/424,018, dated Jun. 10, 2020.
Notice of Allowance for U.S. Appl. No. 16/424,018, dated Oct. 20, 2020.
Notice of Allowance for U.S. Appl. No. 16/424,018, dated Mar. 8, 2021.
Office Action for U.S. Appl. No. 16/424,018, dated May 13, 2021.
Office Action for U.S. Appl. No. 16/424,018, dated Sep. 3, 2021.
Notice of Allowance for U.S. Appl. No. 16/424,018, dated Nov. 2, 2021.
Office Action for U.S. Appl. No. 16/424,018, dated Jan. 24, 2022.
Notice of Allowance for U.S. Appl. No. 16/424,018, dated Jun. 10, 2022.
"±1.5g Dual Axis Micromachined Accelerometer", Freescale Semiconductor, Inc., Motorola Semiconductor Technical Data, MMA6260Q, Jun. 2004, pp. 1-7.
"APA Announces Shipment of the SunUV™ Personal UV Monitor", Press Release, Nov. 7, 2003, pp. 1-3.
"Camera Specs Take Candid Snaps", BBC News, Sep. 18, 2003, pp. 1-3.
"Cardo Wireless Attaching Clips and Wearing Headset", Cardo Systems, Inc., http://www.cardowireless.com/clips.php, downloaded Nov. 27, 2004, pp. 1-3.
"Environmental Health Criteria 14: Ultraviolet Radiation", International Programme on Chemical Safety, World Health Organization Geneva, 1979 http://www.ichem.org., pp. 1-102.
"Exclusive Media Event Marks Debut of Oakley Thump: World's First Digital Audio Eyewear", Oakley Investor Relations, Press Release, Nov. 15, 2004, pp. 1-2.

(56) **References Cited**

OTHER PUBLICATIONS

"Eyetop, Product-Features", eyetop eyewear, eyetop belt worn, http://www.eyetop.net/products/eyetop/features.asp., downloaded Nov. 6, 2003, pp. 1-2.
"Heart Rate Monitors", http://www.healthgoods.com, downloaded Dec. 4, 2004.
"How is the UV Index Calculated", SunWise Program, U.S. Environmental Protection Agency, http://www.epa.gov/sunwise/uvcalc.html, downloaded Oct. 14, 2004, pp. 1-2.
"Industrial UV Measurements", APA Optics, Inc., http://www.apaoptics.com/uv/, downloaded Jul. 12, 2004, p. 1.
"Motorola and Oakley Introduce First Bluetooth Sunglasses-Cutting Edge RAZRWire Line Offers Consumers On-The-Go Connections", Motorola Mediacenter-Press Release, Feb. 14, 2005, pp. 1-2.
"Oakley Thump: Sunglasses Meet MP3 Player", with image, http://news.designtechnica.com/article4665.html, Jul. 13, 2004.
"Personal UV monitor," Optics.org, http://optics.org/articles/news/6/6/7/1 (downloaded Dec. 20, 2003), Jun. 9, 2000, pp. 1-2.
"SafeSun Personal Ultraviolet Light Meter", http://healthchecksystems.com/safesun.htm, downloaded Jul. 12, 2004, pp. 1-4.
"SafeSun Personal UV Meter", Introduction, Optix Tech Inc., http://www.safesun.com, downloaded Feb. 5, 2004, pp. 1-2.
SafeSun Personal UV Meter, features, Optix Tech Inc., http://www.safesun.com/features.html, downloaded May 1, 2004, pp. 1-2.
"Sharper Image—The FM Pedometer", e-Corporate Gifts.com, http://www.e-corporategifts.com/sr353.html, downloaded Jan. 22, 2005, pp. 1-2.
"Sun UV ™ Personal UV Monitor", APA Optics, Inc., http://www.apaoptics.com/sunuv/uvfacts.html, downloaded Dec. 20, 2003, pp. 1-3.
"Ultraviolet Light and Sunglasses", Oberon's Frequently Asked Questions, http://www.oberoncompany.com/OBEnglish/FAQUV.html, downloaded Feb. 5, 2004, pp. 1-2.
"Ultraviolet Light Sensor", Barrett & Associates Engineering, http://www.barrettengineering.com/project_uvs.htm, downloaded Feb. 5, 2004, pp. 1-3.
"Ultraviolet Radiation (UVR)", Forum North, Ontario Ministry of Labour, http://www3.mb.sympatico.ca/~ericc/ULTRAVIOLET%20RADIATION.htm, downloaded Feb. 5, 2004, pp. 1-6.
"What Are Grippies?", Gripping Eyewear, Inc., http://www.grippingeyewear.com/whatare.html, downloaded Nov. 2, 2005.
"With Racing Heart", Skaloud et al., GPS World, Oct. 1, 2001, http://www.gpsworld.com/gpsworld/content/printContentPopup.jsp?id=1805, pp. 1-5.
Abrisa Product Information: Cold Mirrors, Abrisa, Jun. 2001, p. 1.
Abrisa Product Information: Commercial Hot Mirror, Abrisa, Jun. 2001, p. 1.
Alps Spectacle, Air Conduction Glass, Bone Conduction Glass, http://www.alps-inter.com/spec.htm, downloaded Dec. 10, 2003, pp. 1-2.
Altimeter and Compass Watches, http://store.yahoo.com/snowshack/altimeter-watches.html, downloaded May 3, 2004, pp. 1-2.
Bone Conduction Headgear HG16 Series, "Voiceducer," http://www.temco-j.co.jp/html/English/HG16.html, downloaded Dec. 10, 2003, pp. 1-3.
Carney, David, "The Ultimate MP3 Player for Athletes? Could be.", CNET Reviews, May 14, 2004, pp. 1-4.
Clifford, Michelle A., "Accelerometers Jump into the Consumer Goods Market", Sensors Online, http://www.sensorsmag.com, Aug. 2004.
Comfees.com, Adjustable Sports Band Style No. 1243, http://shop.store.yahoo.com/comfees/adsportbansty.html, downloaded Apr. 18, 2003, pp. 1-2.
Cool Last Minute Gift Ideas!, UltimateFatBurner Reviews and Articles, http://www.ultimatefatburner.com/gift-ideas.html, downloaded May 10, 2005, pp. 1-3.
Dickie et al. "Eye Contact Sensing Glasses for Attention-Sensitive Wearable Video Blogging," Human Media Lab, Queen's University, Kingston, ON K7L3N6, Canada, est. Apr. 2004, pp. 1-2.
Dixen, Brian, "ear-catching", Supertesten, Mobil, Apr. 2003 (estimated), pp. 37-41.
Global Solar UV Index, A Practical Guide, World Health Organization, 2002, pp. 1-28.
Grobart, Sam, "Digit-Sizing Your Computer Data", News Article, Sep. 2004, p. 1.
Life Monitor V1.1, Rhusoft Technologies Inc., http://www.rhusoft.com/lifemonitor/, Mar. 1, 2003, pp. 1-6.
Manes, Stephen, "Xtreme Cam", Forbes Magazine, Sep. 5, 2005, p. 96.
Mio, Physical, http://www.gophysical.com/, downloaded Jan. 27, 2004, 5 pages.
Monitoring Athletes Performance—2002 Winter Olympic News from KSL, Jan. 23, 2002, http://2002.ksl.com/news-3885i, pp. 1-3.
Niwa, "UV Index Information", http://www.niwa.cri.nz/services/uvozone/uvi-info, downloaded Jul. 15, 2004, pp. 1-2.
NuVision 60GX Steroscopic Wireless Glasses, Product Information, NuVision by MacNaughton, c. 1997, MacNaughton, Inc., pp. 1-2.
Pärkkä, Juha, et al., "A Wireless Wellness Monitor for Personal Weight Management", VTT Information Technology, Tampere, Finland, Nov. 2000, p. 1.
Pedometer, Model HJ-112, Omron Instruction Manual, Omron Healthcare, Inc., 2003, pp. 1-27.
PNY Announces Executive Attaché USB 2.0 Flash Drive and Pen Series, Press Release, PNY Technologies, Las Vegas, Jan. 8, 2004, pp. 1-2.
PNY Technologies," Executive Attache" http://www.pny.com/products/flash/execattache.asp downloaded Nov. 16, 2005.
Polar WM41 and 42 weight management monitor, http://www.simplysports/polar/weight_management/wm41-42.htm, downloaded Jan. 28, 2004, pp. 1-3.
Questions Answers, Pedometer.com, http://www.pedometer.com, downloaded May 5, 2005.
Razrwire, copyright Motorola, Inc., Jul. 2005, 1 page.
SafeSun Personal UV Meter, Scientific Data, Optix Tech Inc., http://www.safesun.com/scientific.html, downloaded May 1, 2004, pp. 1-3.
SafeSun Sensor, User's Manual, Optix Tech Inc., Jun. 1998, 2 pages.
Safesun, Personal UV Meter, "Technical Specifications", Optix Tech Inc., http://www.safesun.com/technical.html, downloaded Jul. 12, 2004, pp. 1-2.
Safesun, Personal UV Meter, Experiments, Optix Tech Inc., http://www.safesun.com/experiments.html, downloaded Feb. 5, 2004, pp. 1-2.
Shades of Fun, Blinking Light Glasses, http://www.shadesoffun.com/Nov/Novpgs-14.html, downloaded Jul. 9, 2005, pp. 1-4.
SportLine Fitness Pedometer—Model 360, UltimateFatBurner Superstore, http://www.ultimatefatburner-store.com/ac_004.html, downloaded May 10, 2005, pp. 1-2.
Steele, Bonnie G. et al., "Bodies in motion: Monitoring daily activity and exercise with motion sensors in people with chronic pulmonary disease", VA Research & Development, Journal of Rehabilitation Research & Development, vol. 40, No. 5, Sep./Oct. 2003, Supplement 2, pp. 45-58.
Stevens, Kathy, "Should I Use a Pedometer When I Walk?", Healtheon/WebMD, Apr. 14, 2000.
Sundgot, Jorgen "2nd-gen Motorola Bluetooth headset", InfoSync World, Mar. 1, 2003, http://www.infosync.no/news/2002/n/2841.html, pp. 1-2.
SunSensors, Segan Industries, Inc., http://www.segan-ind.com/sunsensor.htm, downloaded Feb. 5, 2004, pp. 1-3.
SunUV™, Personal UV Monitor User's Guide, APA Optics, Inc., 2003 pp. 1-52.
SunUV™, Personal UV Monitor, APA Optics, Inc., http://www.apaoptics.com/sunuv/models.html, downloaded Dec. 20, 2003.
Talking Pedometer, Sportline, Inc., Jun. 2001 (Possibly earlier), 1 page.
The unofficial ELSA 3D Revelator page, Dec. 30, 1999, pp. 1-15.
Top Silicon PIN Photodiode, PD93-21C, Technical Data Sheet, Everlight Electronics Co., Ltd., 2004, pp. 1-9.

(56) **References Cited**

OTHER PUBLICATIONS

UV Light Meter, UVA and UVB measurement, UV-340, Instruction Manual, Lutron, Jun. 2003 (estimated), pp. 1-5.
UV-Smart, UVA/B Monitor, Model EC-960-PW, Instruction Manual, Tanita Corporation of America, Inc., downloaded Nov. 16, 2001.
Vitaminder Personal Carb Counter, http://www.auravita.com/products/AURA/ORBU11420.asp. Downloaded Nov. 15, 2005, pp. 1-4.
Yamada et al. "Development of an eye-movement analyser possessing functions for wireless transmission and autocalibration," Med. Biol. Eng. Comput., No. 28, v.4, Jul. 28, 1990, http://link.springer.com/article/10.1007%2FBF024461497LI=true, pp. 1-2.
Notice of Allowance for U.S. Appl. No. 16/821,810, dated Oct. 19, 2022.
Notice of Allowance for U.S. Appl. No. 17/484,080, dated Sep. 13, 2022.
Notice of Allowance for U.S. Appl. No. 17/484,080, dated Jan. 31, 2023.
Office Action for U.S. Appl. No. 17/949,029, dated Nov. 23, 2022.
Notice of Allowance for U.S. Appl. No. 17/949,029, dated Mar. 1, 2023.
Notice of Allowance for U.S. Appl. No. 17/395,509, dated Sep. 9, 2022.
Notice of Allowance for U.S. Appl. No. 17/737,866, dated Sep. 16, 2022.
Notice of Allowance for U.S. Appl. No. 16/429,181, dated Aug. 10, 2022.
Office Action for U.S. Appl. No. 16/424,018, dated Sep. 6, 2022.
Office Action for U.S. Appl. No. 16/424,018, dated Nov. 25, 2022.
Notice of Allowance for U.S. Appl. No. 16/424,018, dated Feb. 21, 2023.

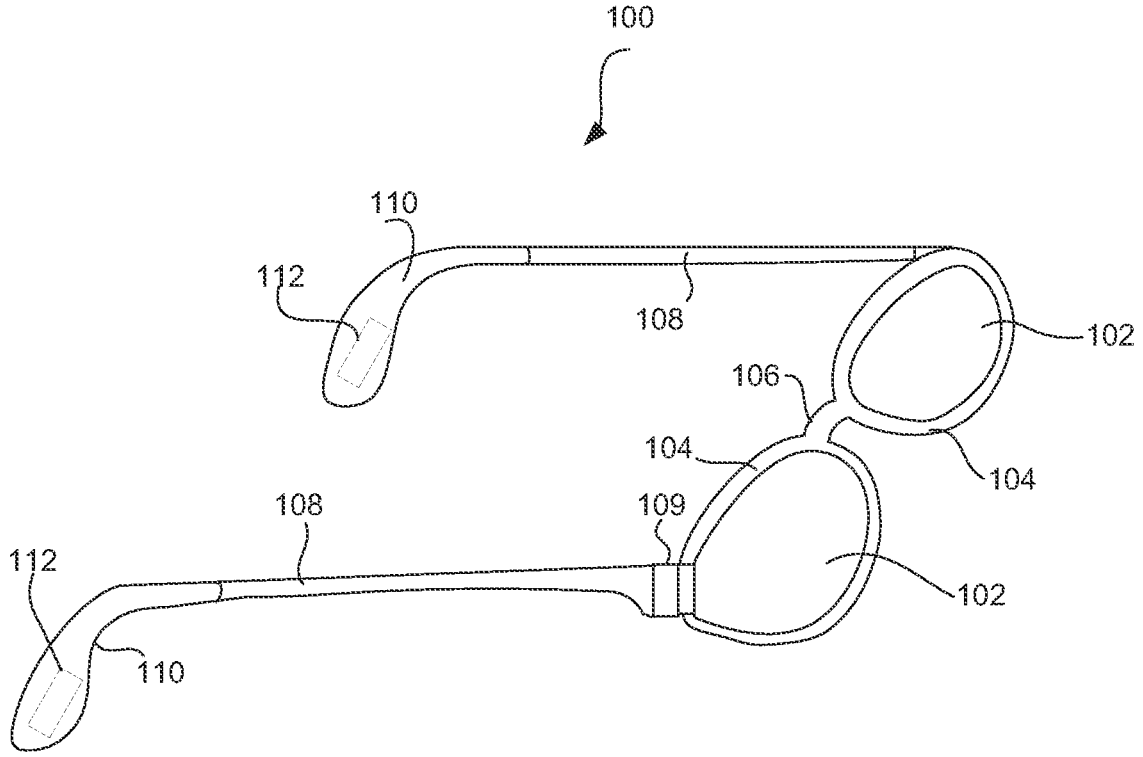

FIG. 1

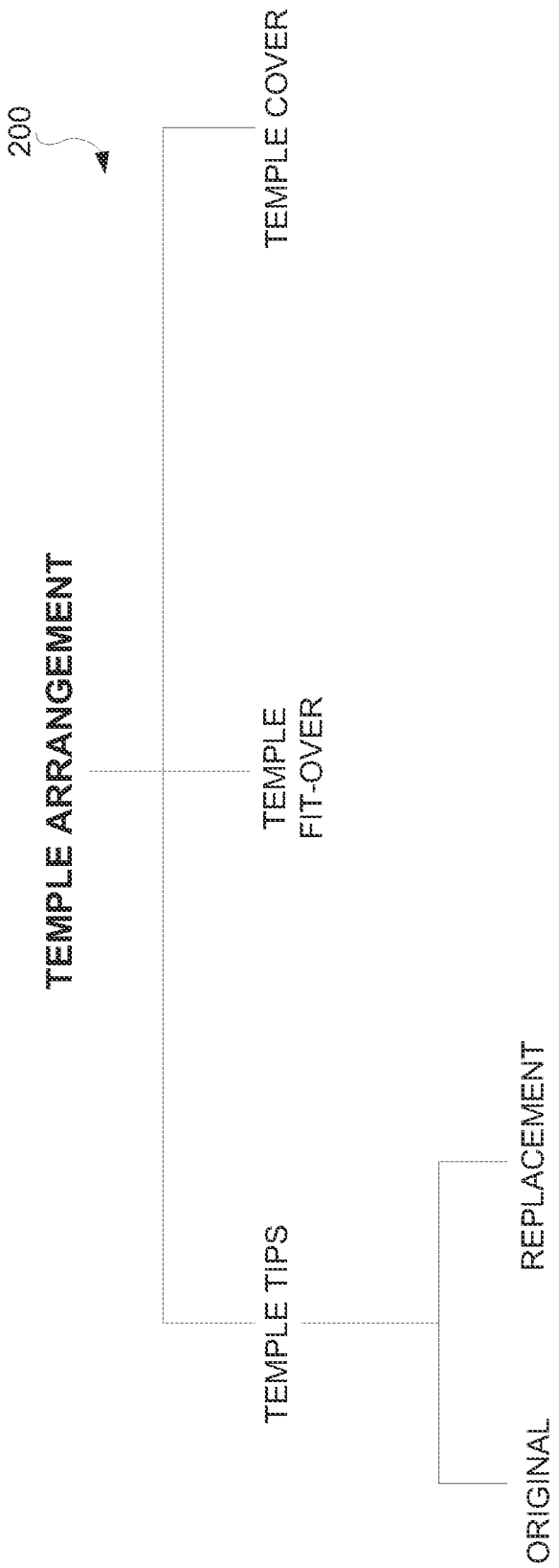
200
TEMPLE ARRANGEMENT
TEMPLE COVER
TEMPLE FIT-OVER
TEMPLE TIPS
REPLACEMENT
ORIGINAL

FIG. 2

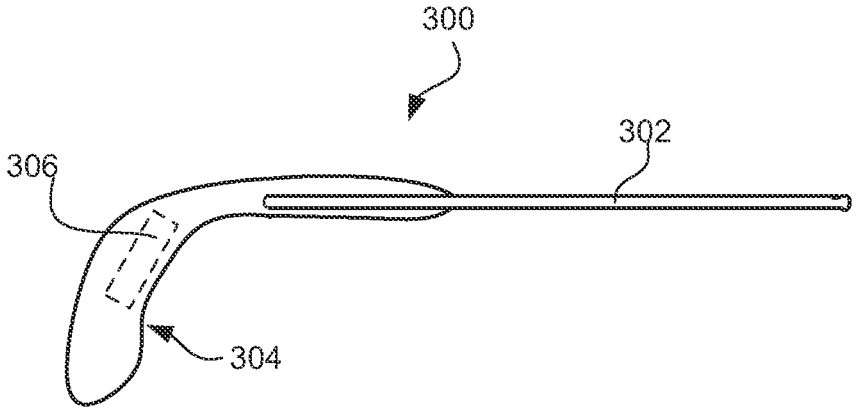

FIG. 3A

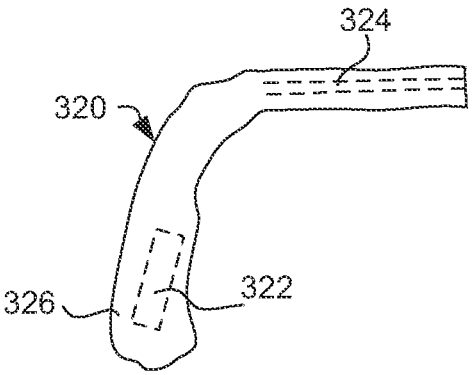

FIG. 3B

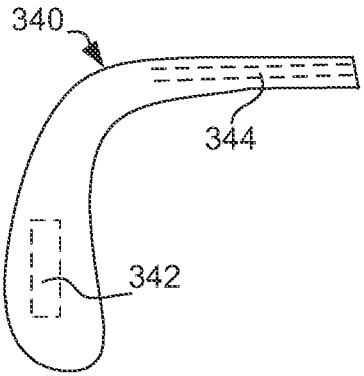

FIG. 3C

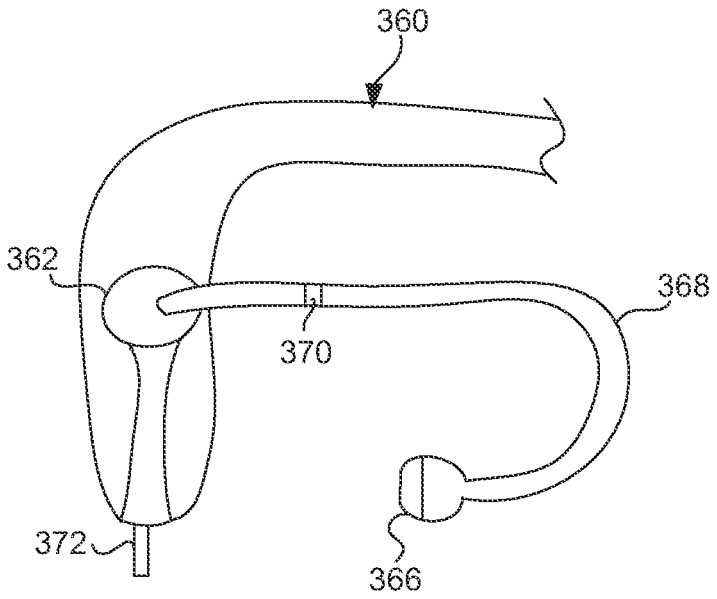

FIG. 3D

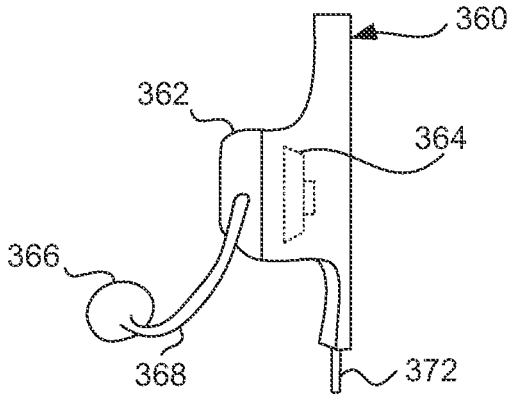

FIG. 3E

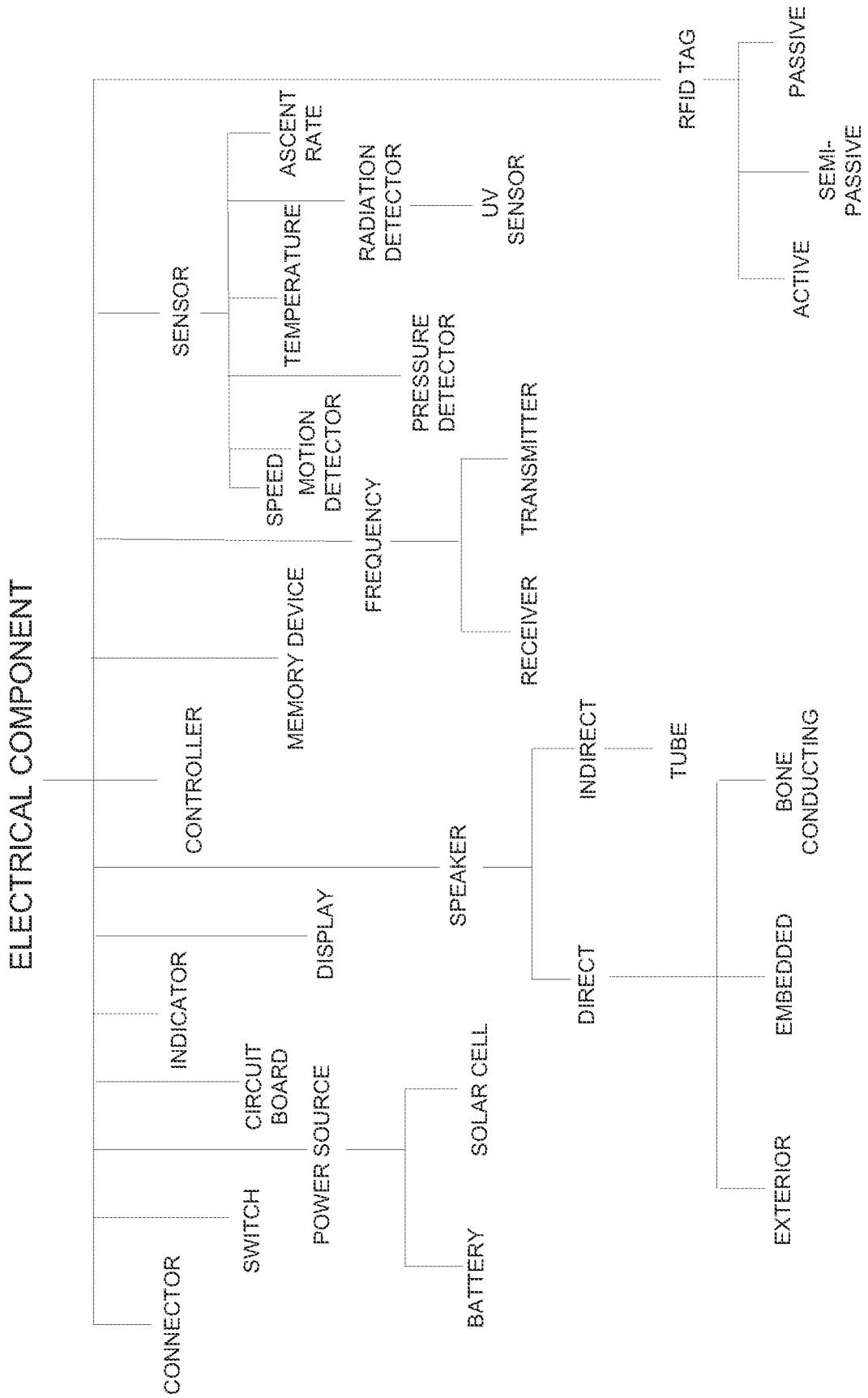
ELECTRICAL COMPONENT
CONNECTOR
SWITCH
CIRCUIT BOARD
INDICATOR
CONTROLLER
SENSOR
POWER SOURCE
DISPLAY
MEMORY DEVICE
SPEAKER
BATTERY
SOLAR CELL
SPEED
MOTION DETECTOR
TEMPERATURE
ASCENT RATE
FREQUENCY
PRESSURE DETECTOR
RADIATION DETECTOR
UV SENSOR
RECEIVER
TRANSMITTER
DIRECT
INDIRECT
TUBE
EXTERIOR
EMBEDDED
BONE CONDUCTING
RFID TAG
ACTIVE
SEMI-PASSIVE
PASSIVE

FIG. 4

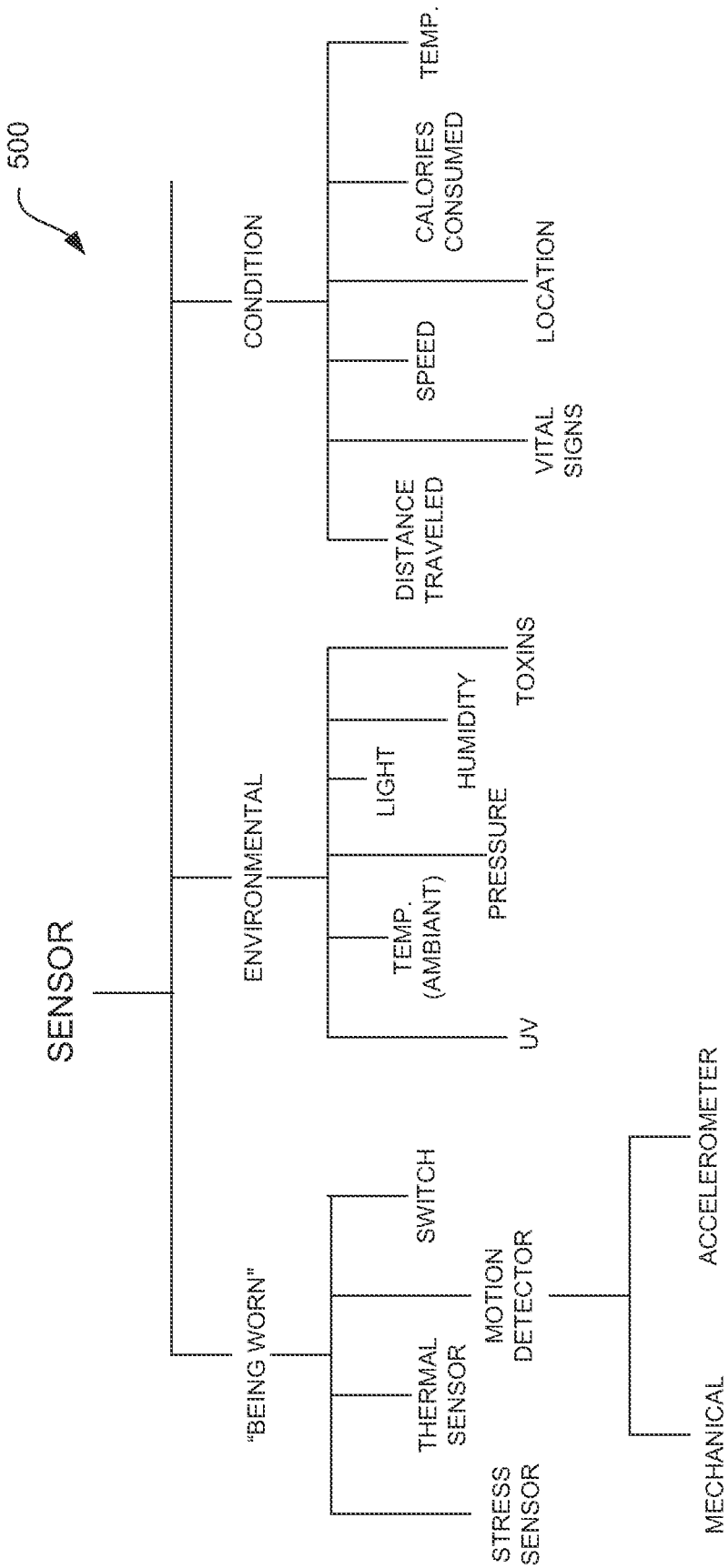
500
SENSOR
CONDITION
ENVIRONMENTAL
"BEING WORN"
TEMP.
CALORIES CONSUMED
LOCATION
SPEED
VITAL SIGNS
DISTANCE TRAVELED
TOXINS
HUMIDITY
LIGHT
PRESSURE
TEMP. (AMBIANT)
UV
SWITCH
MOTION DETECTOR
THERMAL SENSOR
STRESS SENSOR
ACCELEROMETER
MECHANICAL

FIG. 5

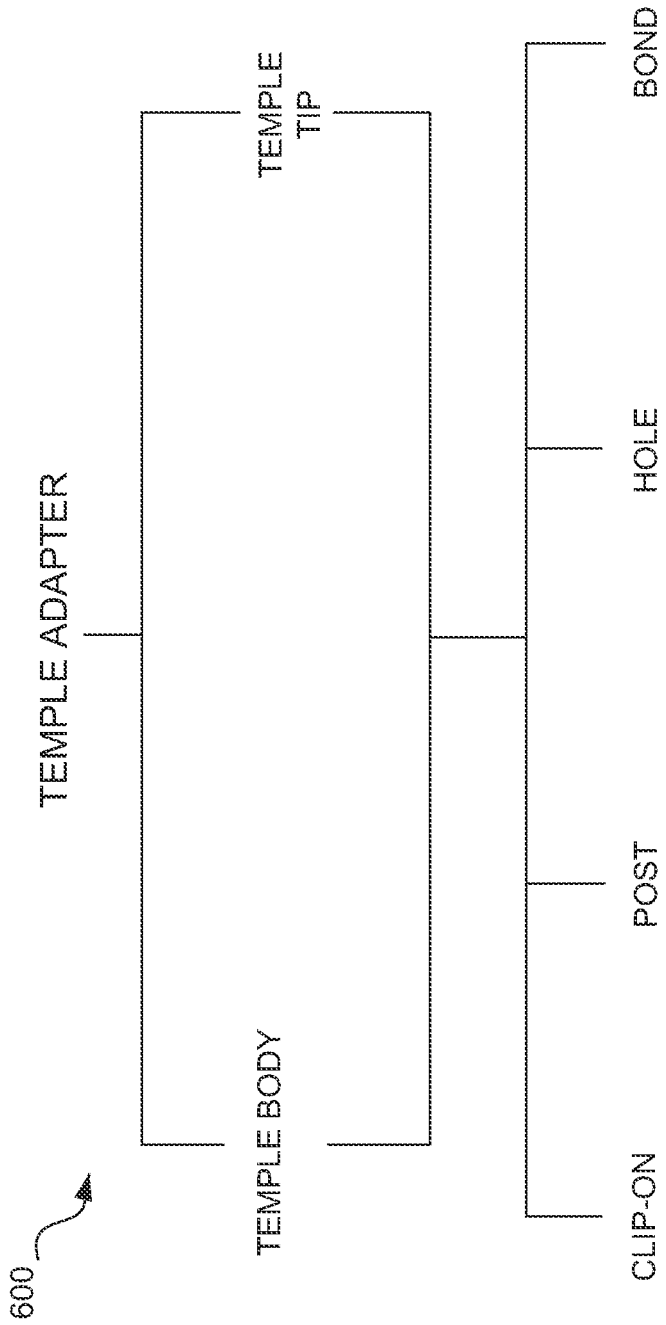
600
TEMPLE ADAPTER
TEMPLE BODY
TEMPLE TIP
CLIP-ON
POST
HOLE
BOND

FIG. 6

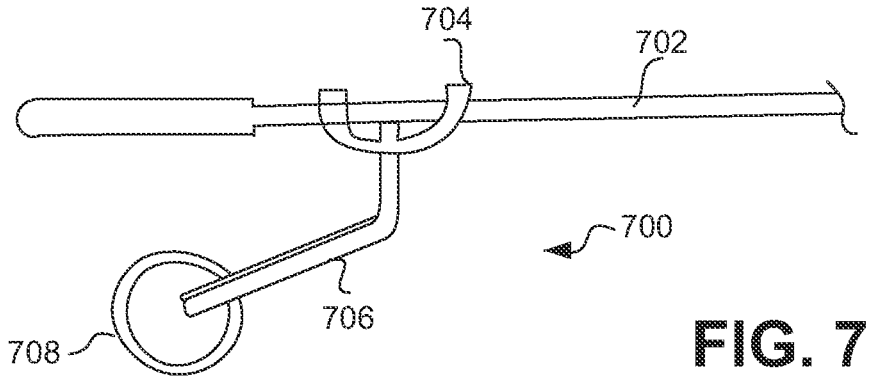

FIG. 7A

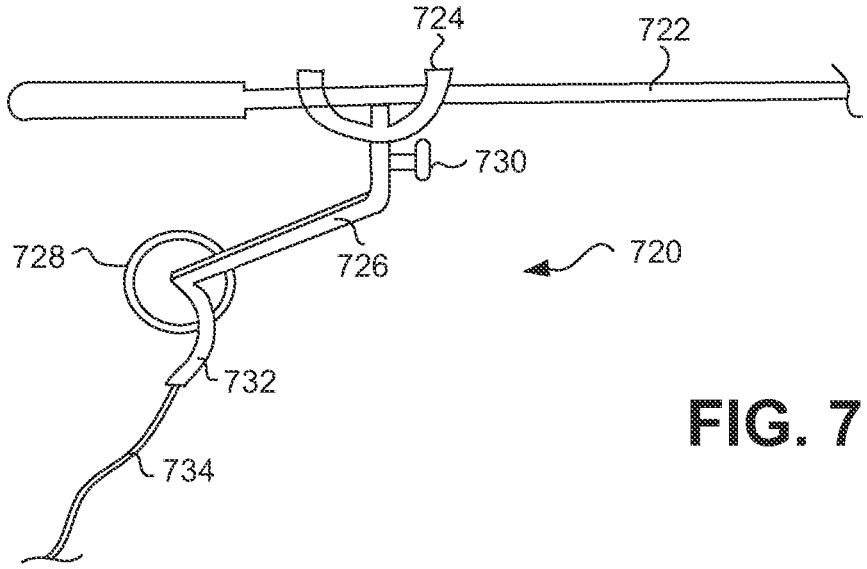

FIG. 7B

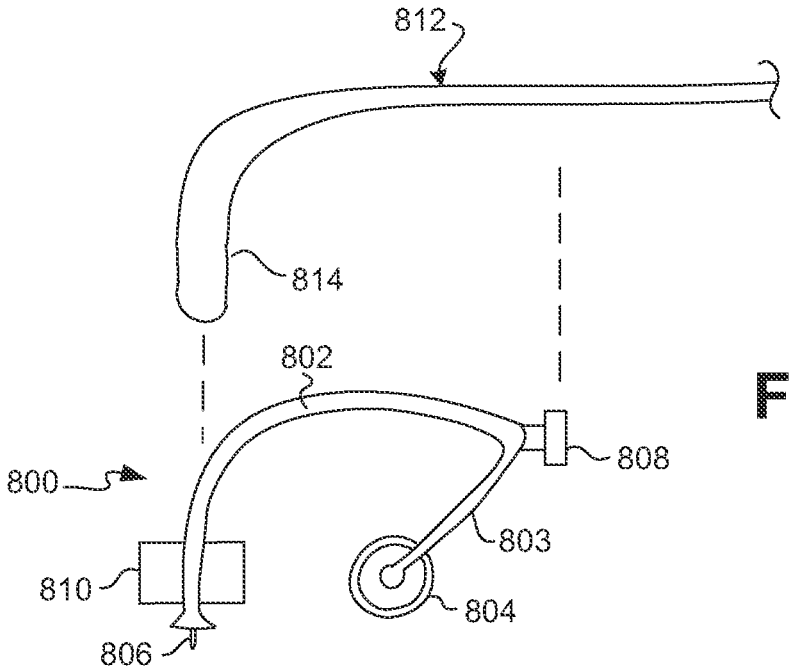

FIG. 8A

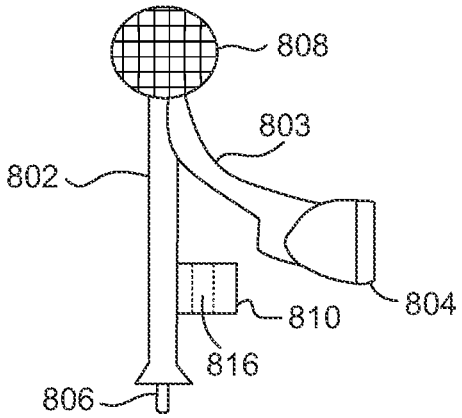

FIG. 8B

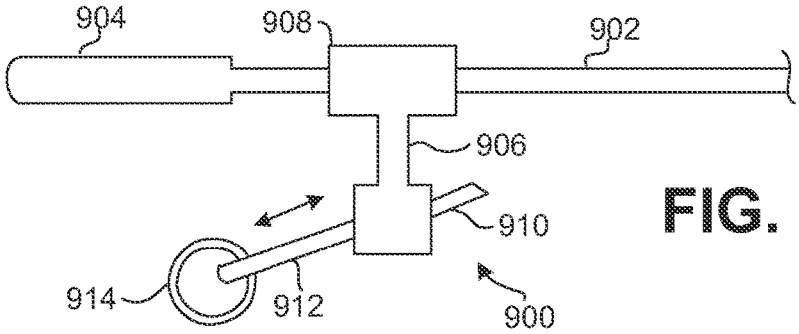

FIG. 9A

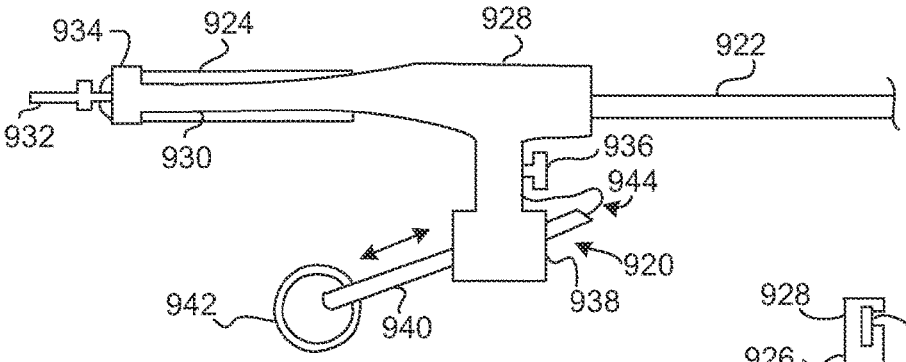

FIG. 9B

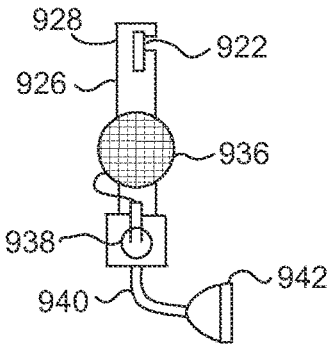

FIG. 9C

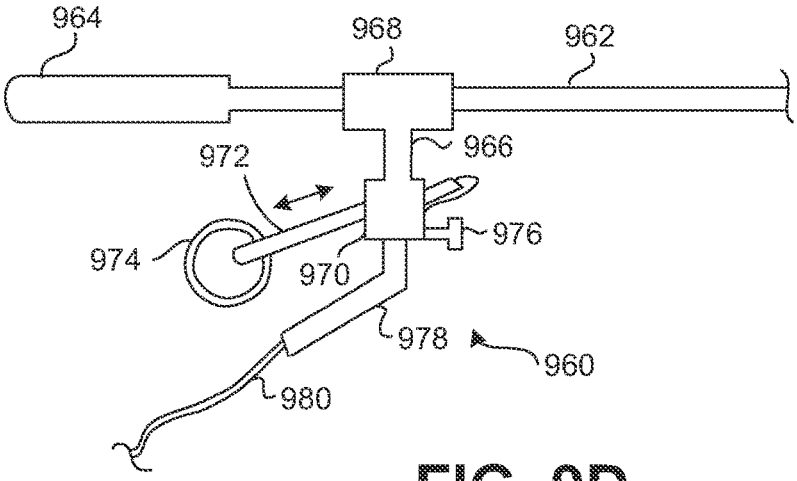

FIG. 9D

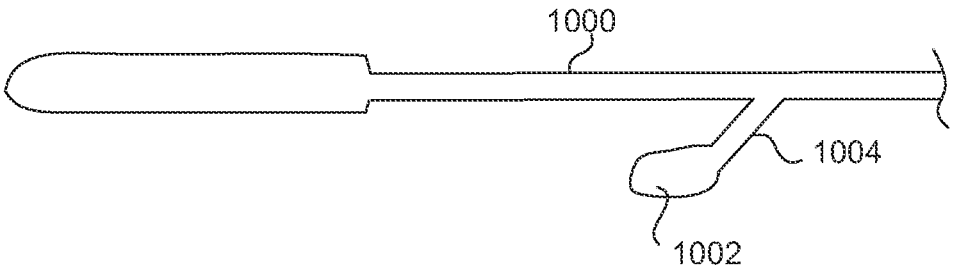

FIG. 10A

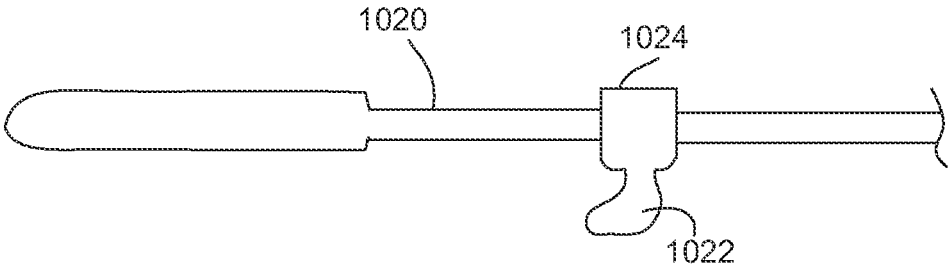

FIG. 10B

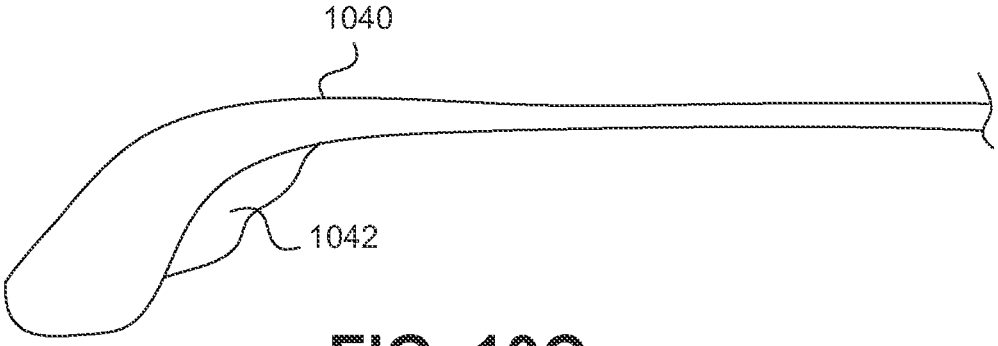

FIG. 10C

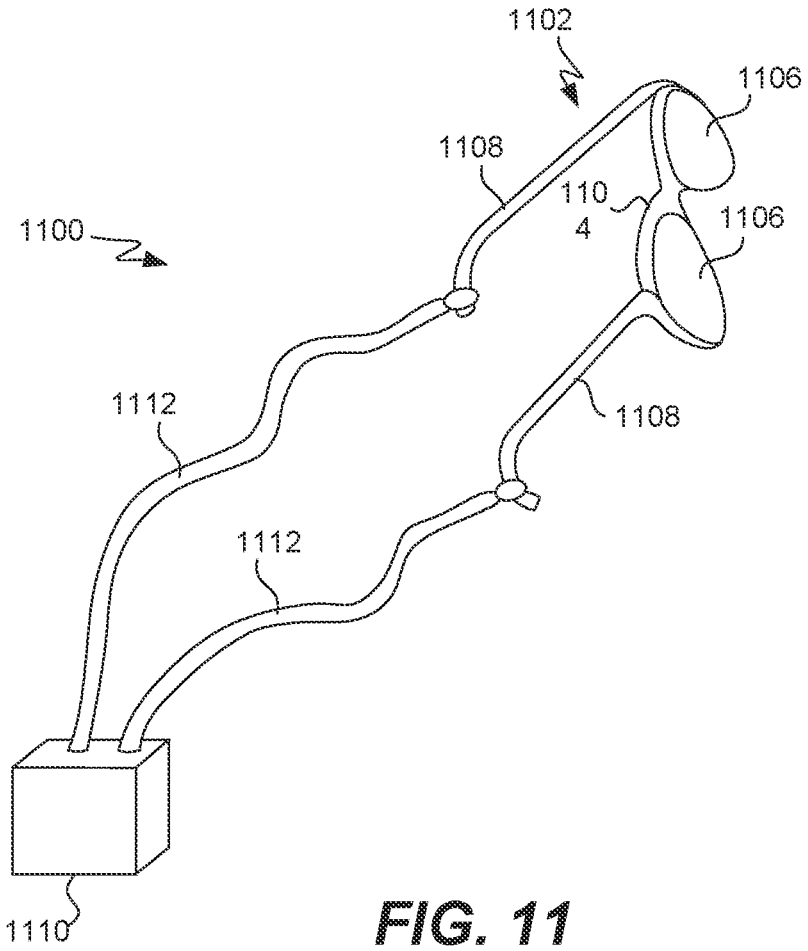

FIG. 11

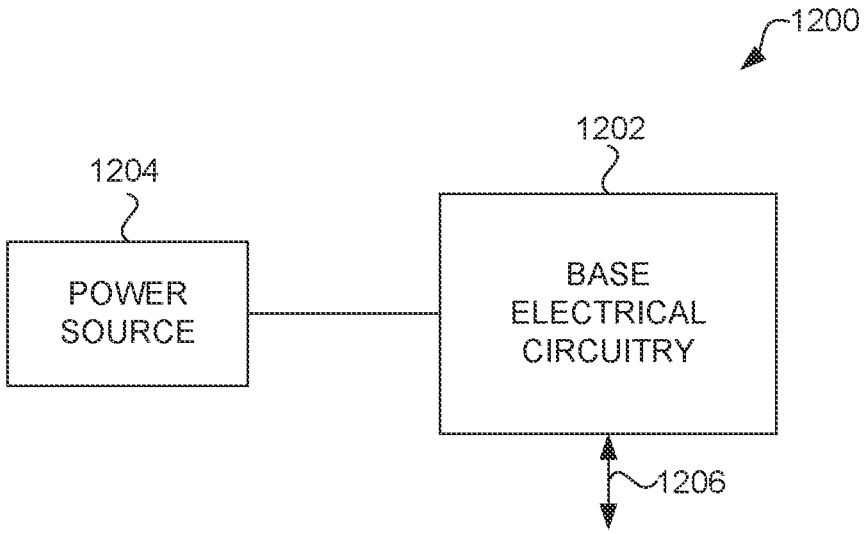

FIG. 12A

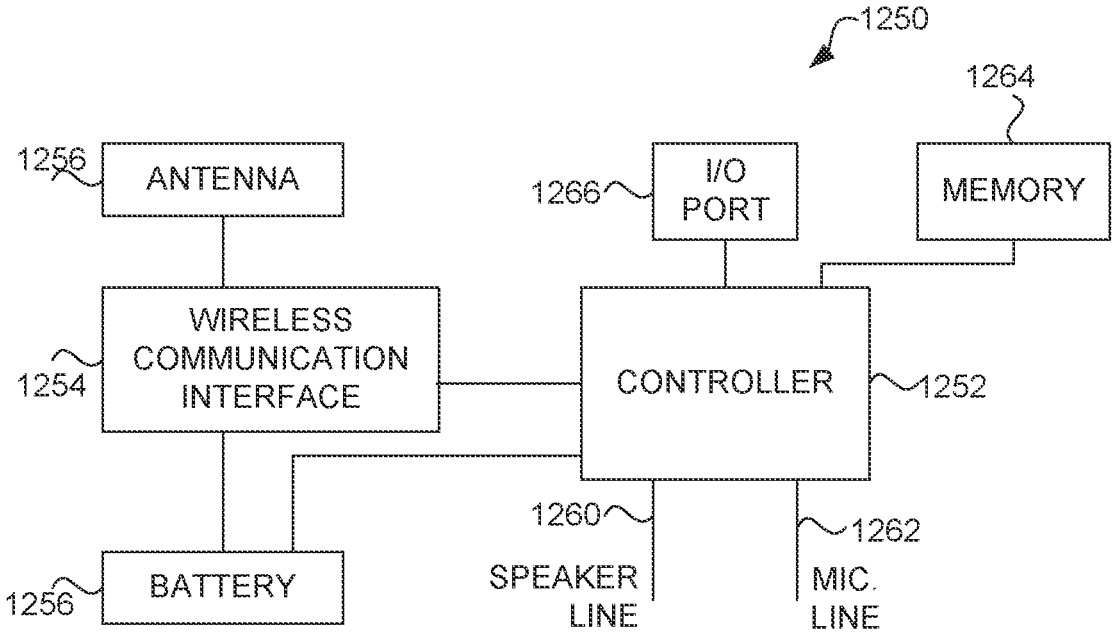

FIG. 12B

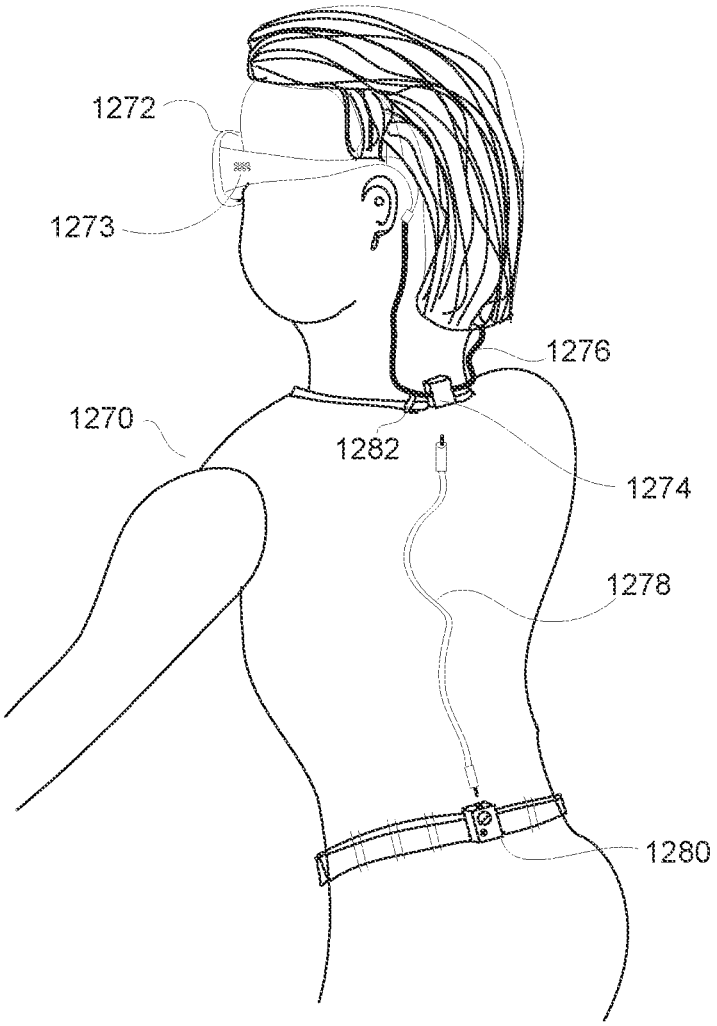

FIG. 12C

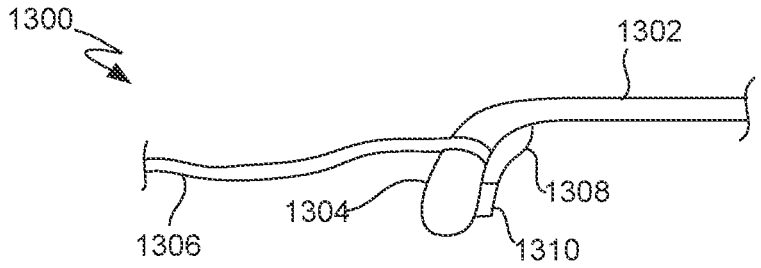

FIG. 13A

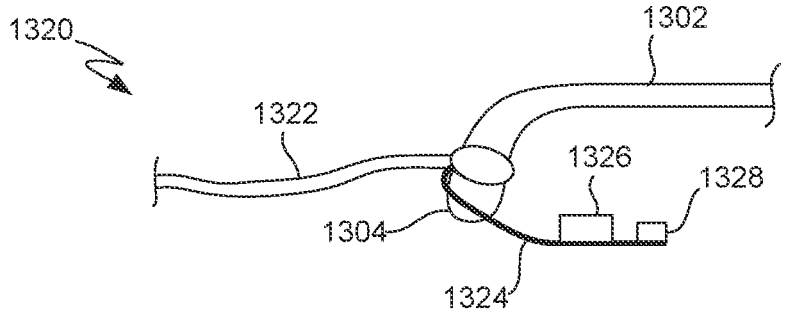

FIG. 13B

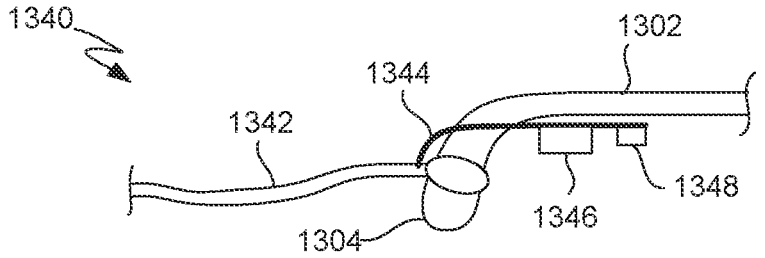

FIG. 13C

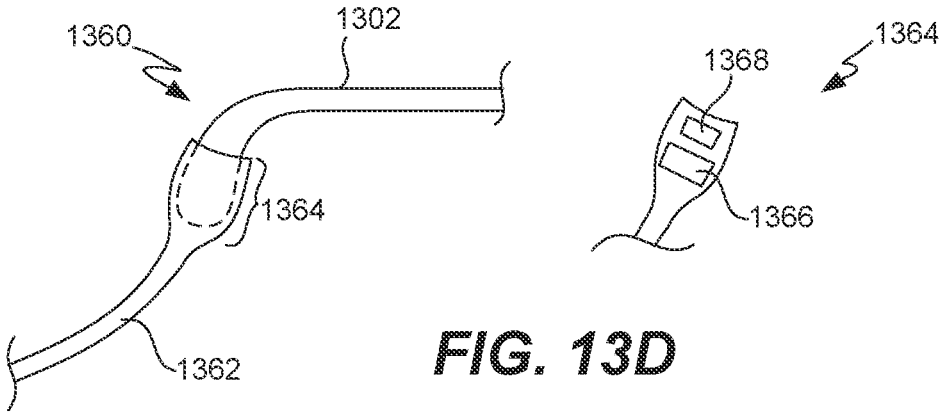

FIG. 13D

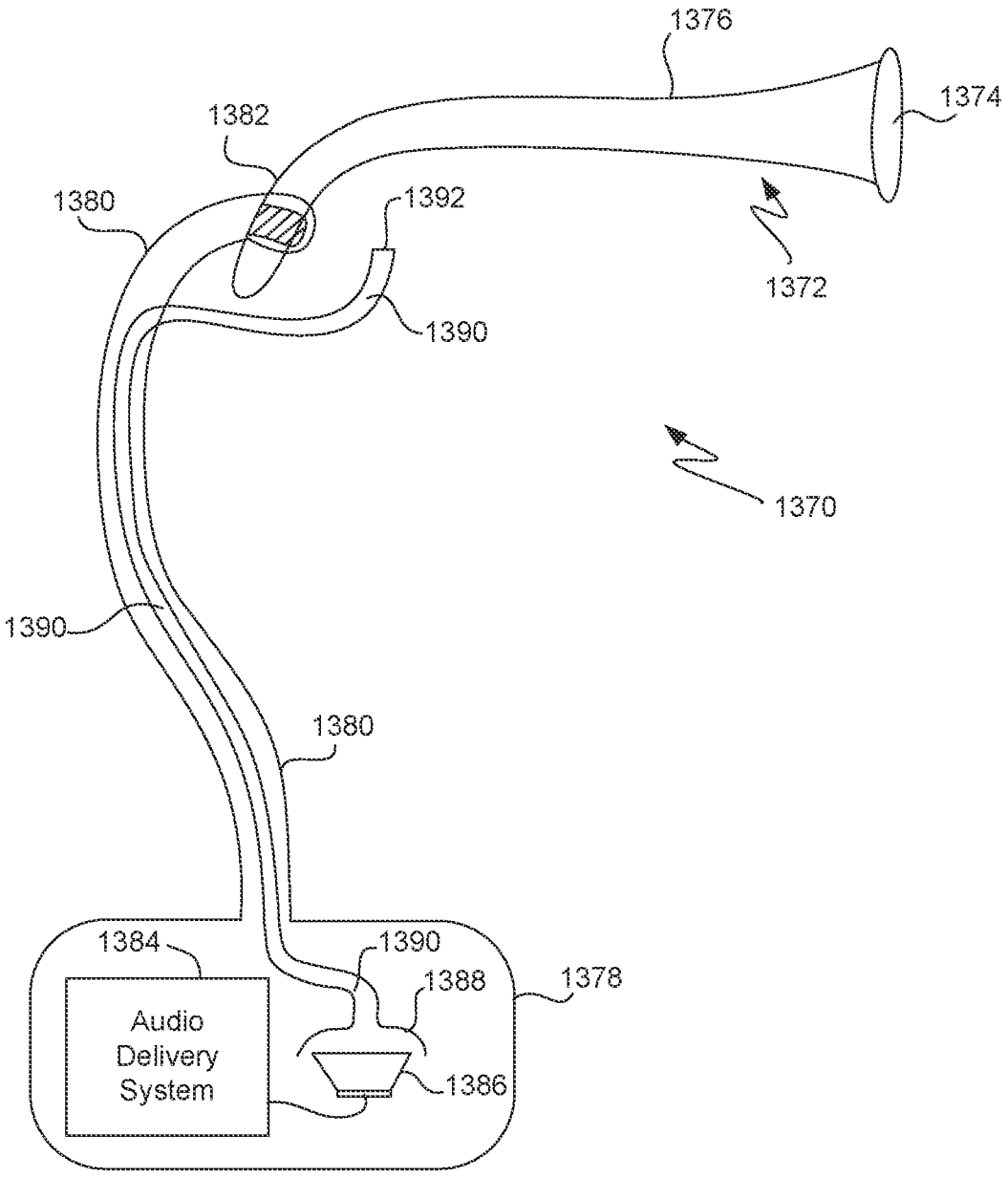
1376
1374
1382
1380
1392
1372
1390
1370
1390
1380
1384
1390
1388
1378
Audio
Delivery
System
1386

FIG. 13E

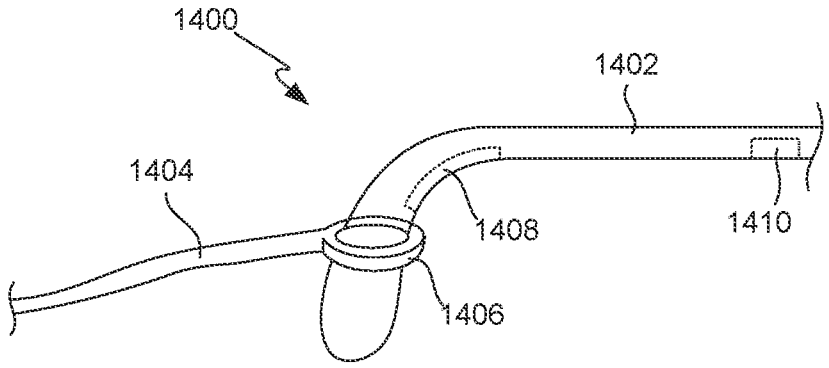

FIG. 14A

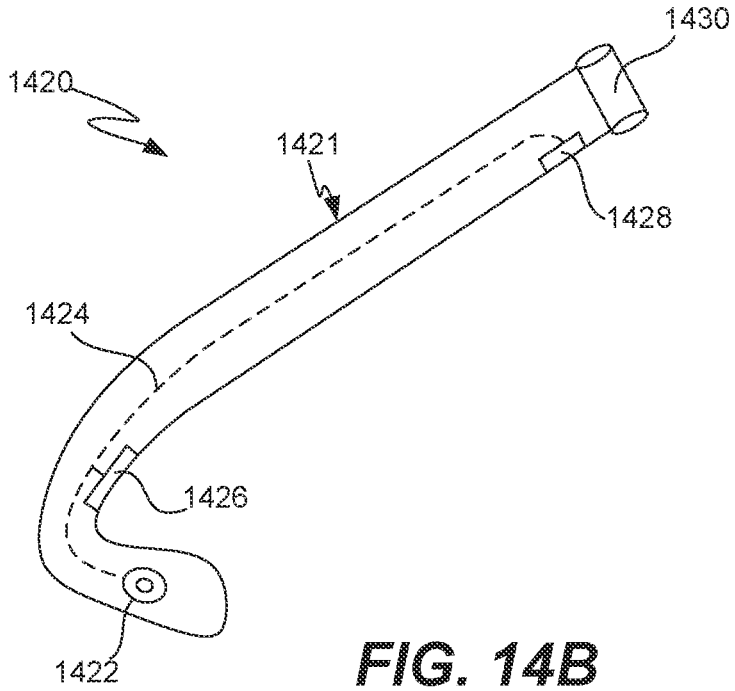

FIG. 14B

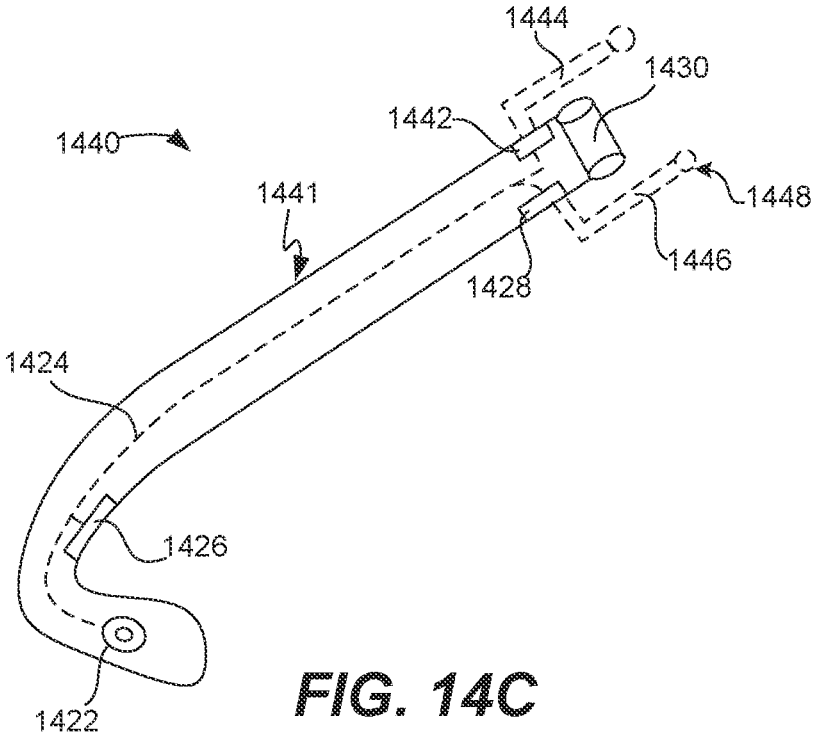

FIG. 14C

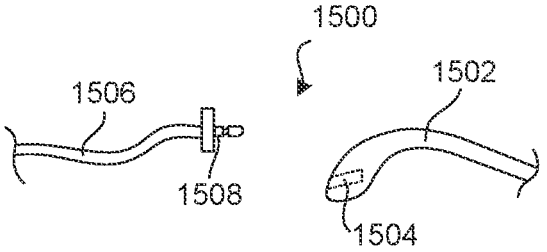

FIG. 15A

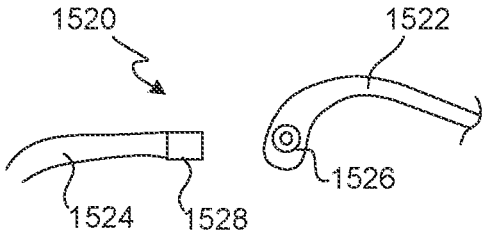

FIG. 15B

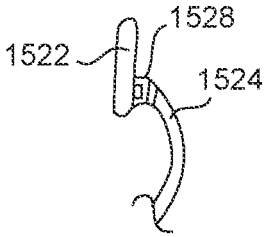

FIG. 15C

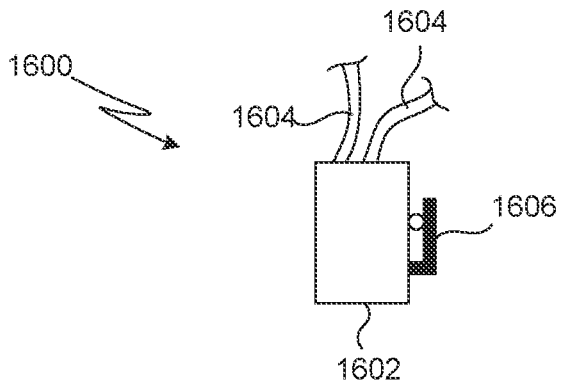

FIG. 16

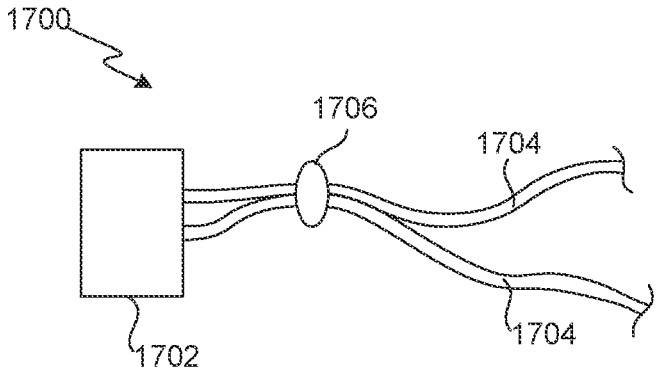

FIG. 17

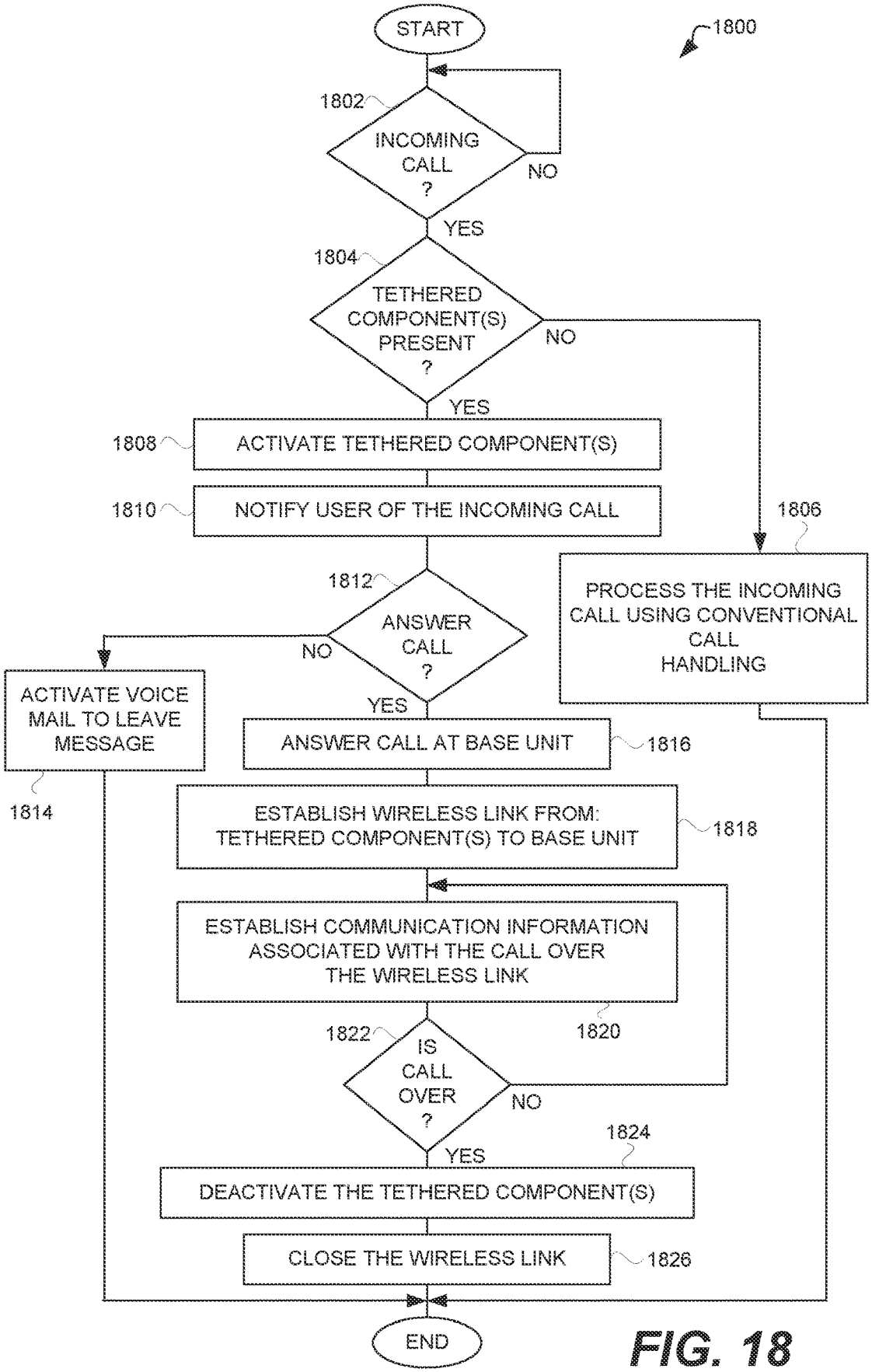
START
1800
1802
INCOMING CALL ?
NO
YES
1804
TETHERED COMPONENT(S) PRESENT ?
NO
YES
1808
ACTIVATE TETHERED COMPONENT(S)
1810
NOTIFY USER OF THE INCOMING CALL
1806
PROCESS THE INCOMING CALL USING CONVENTIONAL CALL HANDLING
1812
ANSWER CALL ?
NO
YES
ACTIVATE VOICE MAIL TO LEAVE MESSAGE
1814
ANSWER CALL AT BASE UNIT
1816
ESTABLISH WIRELESS LINK FROM: TETHERED COMPONENT(S) TO BASE UNIT
1818
ESTABLISH COMMUNICATION INFORMATION ASSOCIATED WITH THE CALL OVER THE WIRELESS LINK
1820
1822
IS CALL OVER ?
NO
YES
1824
DEACTIVATE THE TETHERED COMPONENT(S)
CLOSE THE WIRELESS LINK
1826
END

FIG. 18

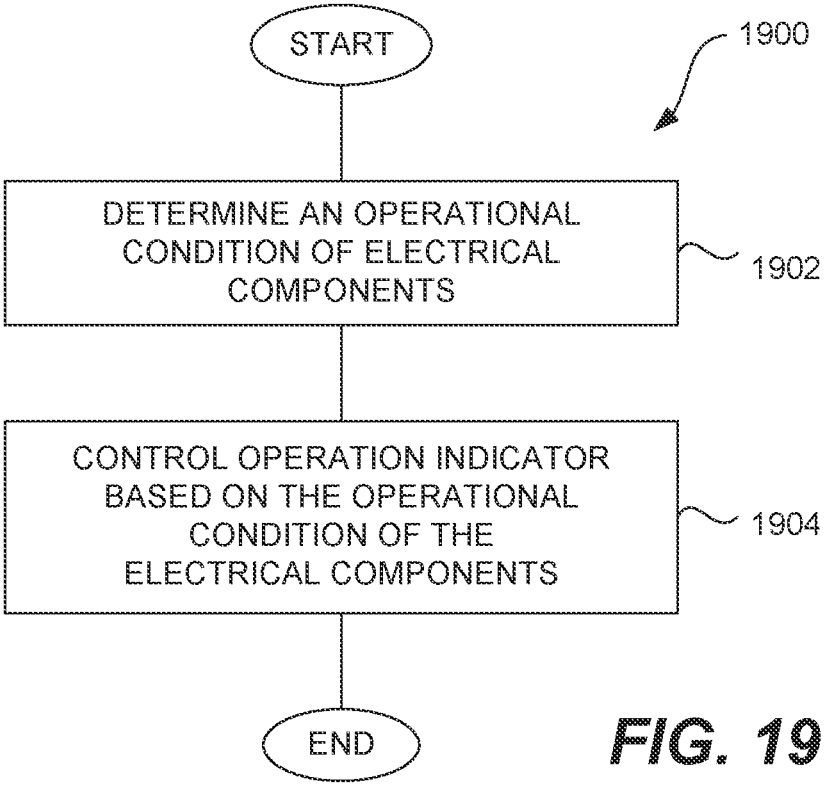
START
1900
DETERMINE AN OPERATIONAL CONDITION OF ELECTRICAL COMPONENTS
1902
CONTROL OPERATION INDICATOR BASED ON THE OPERATIONAL CONDITION OF THE ELECTRICAL COMPONENTS
1904
END

FIG. 19

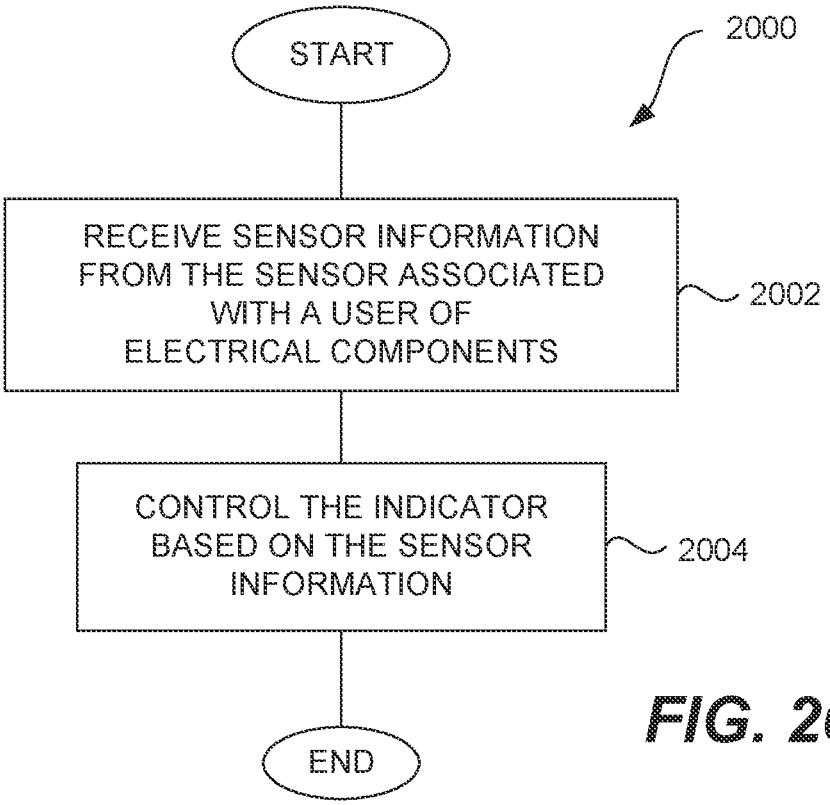
START
2000
RECEIVE SENSOR INFORMATION FROM THE SENSOR ASSOCIATED WITH A USER OF ELECTRICAL COMPONENTS
2002
CONTROL THE INDICATOR BASED ON THE SENSOR INFORMATION
2004
END

FIG. 20

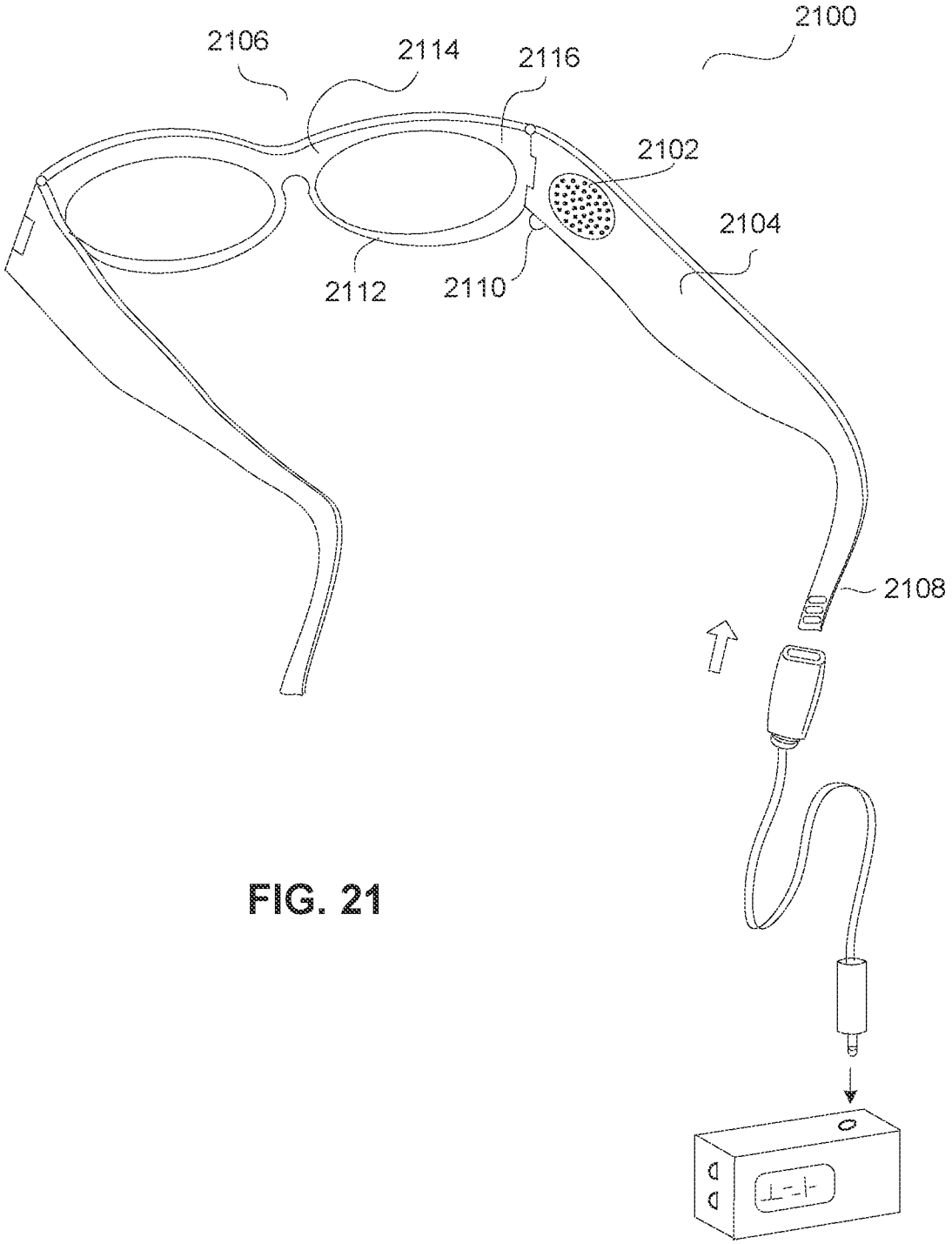

FIG. 21

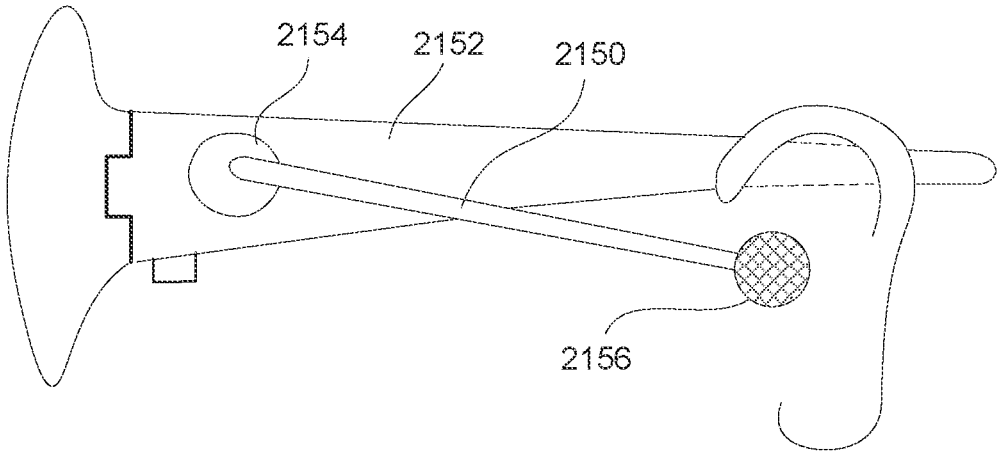

FIG. 22

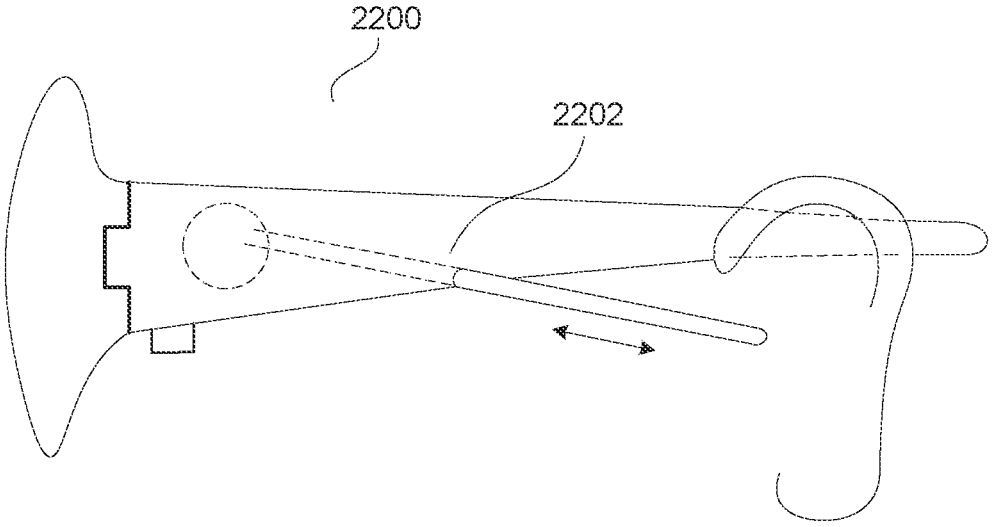

FIG. 23

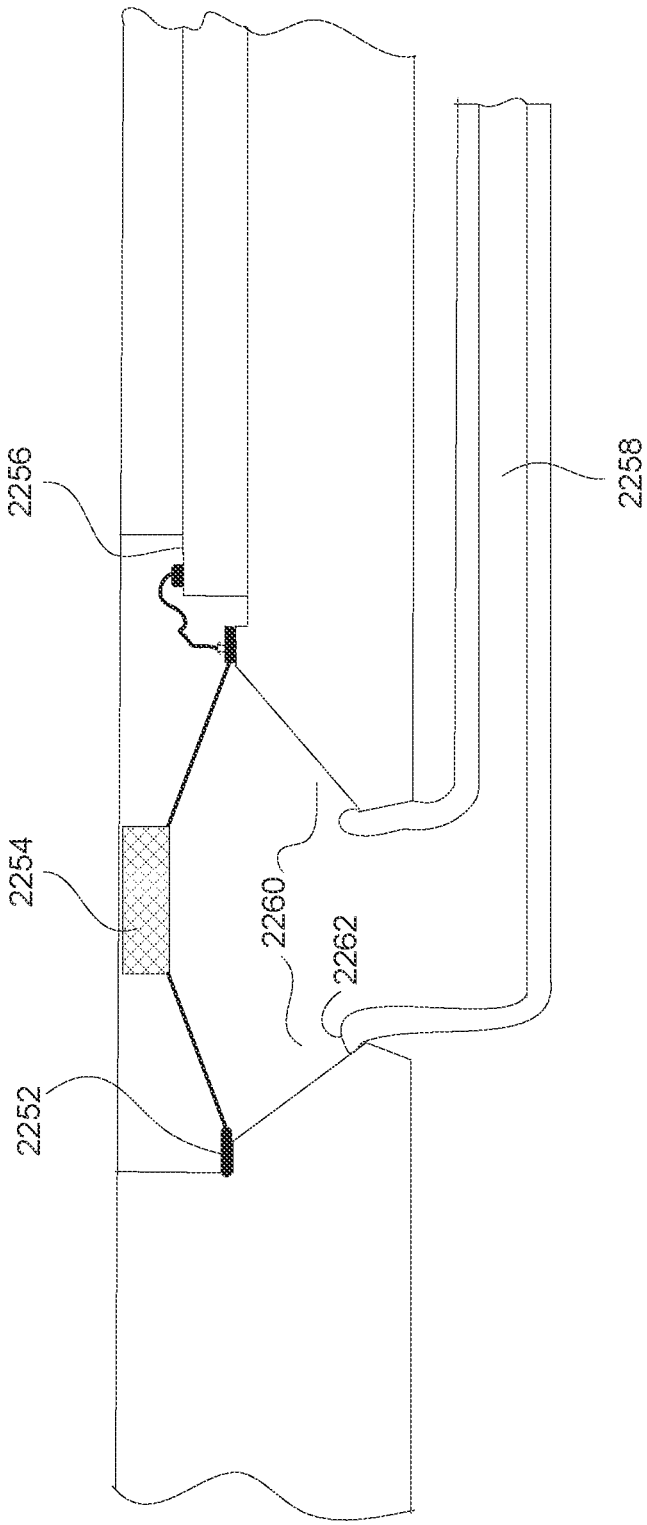

Fig. 24

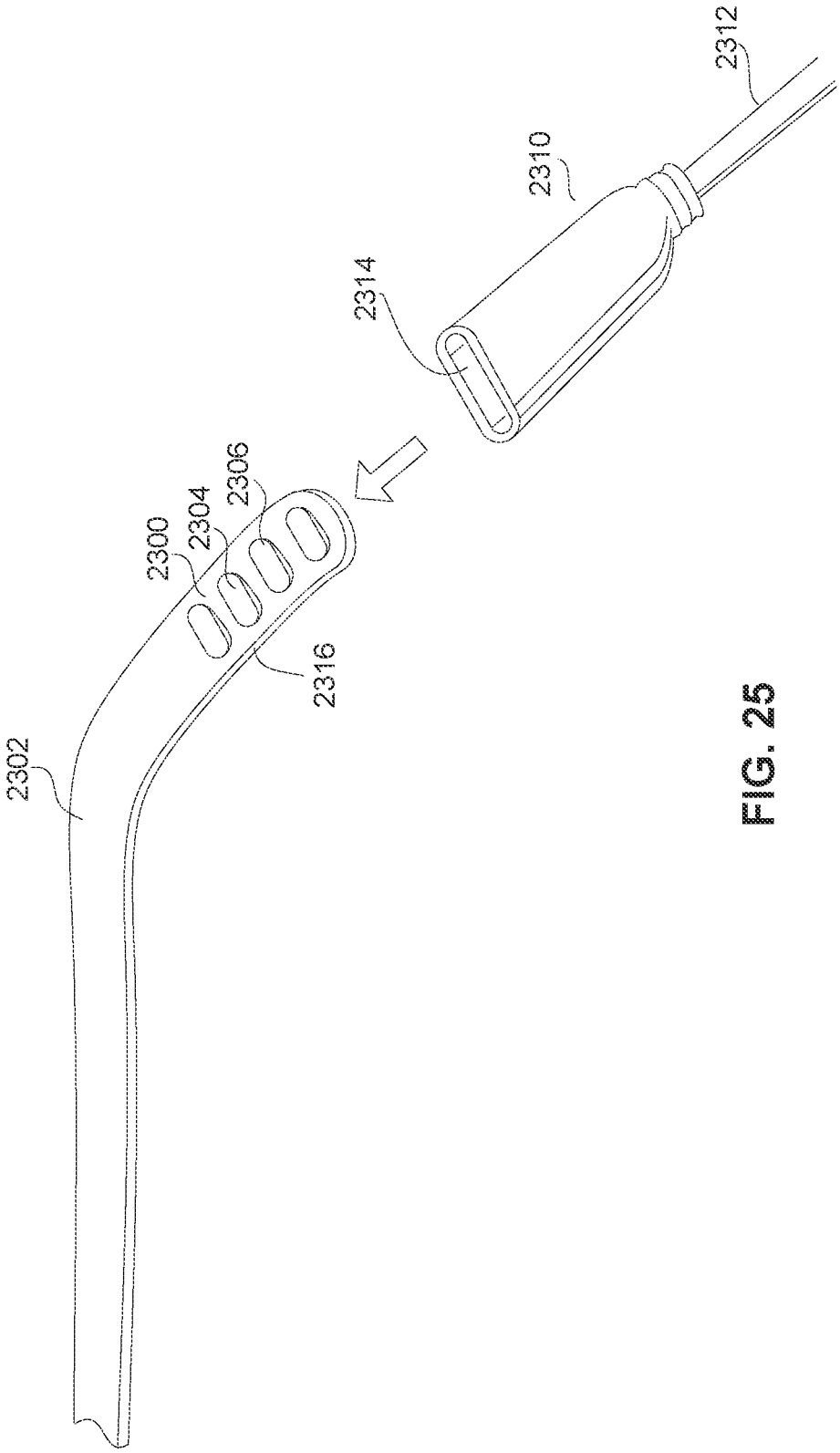

FIG. 25

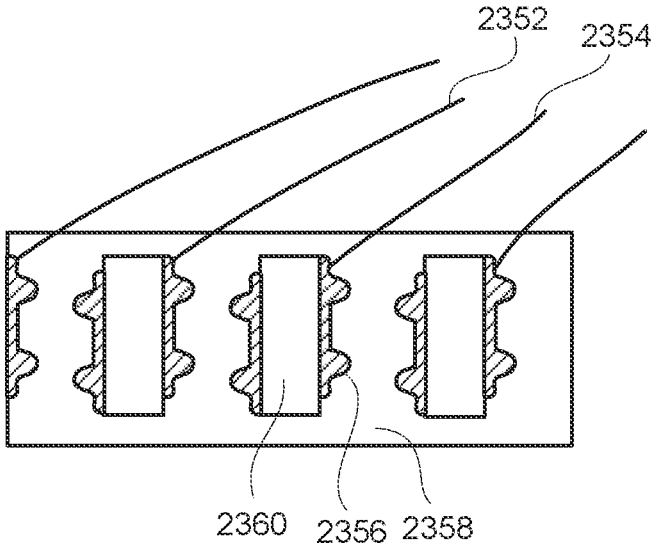

FIG. 26A

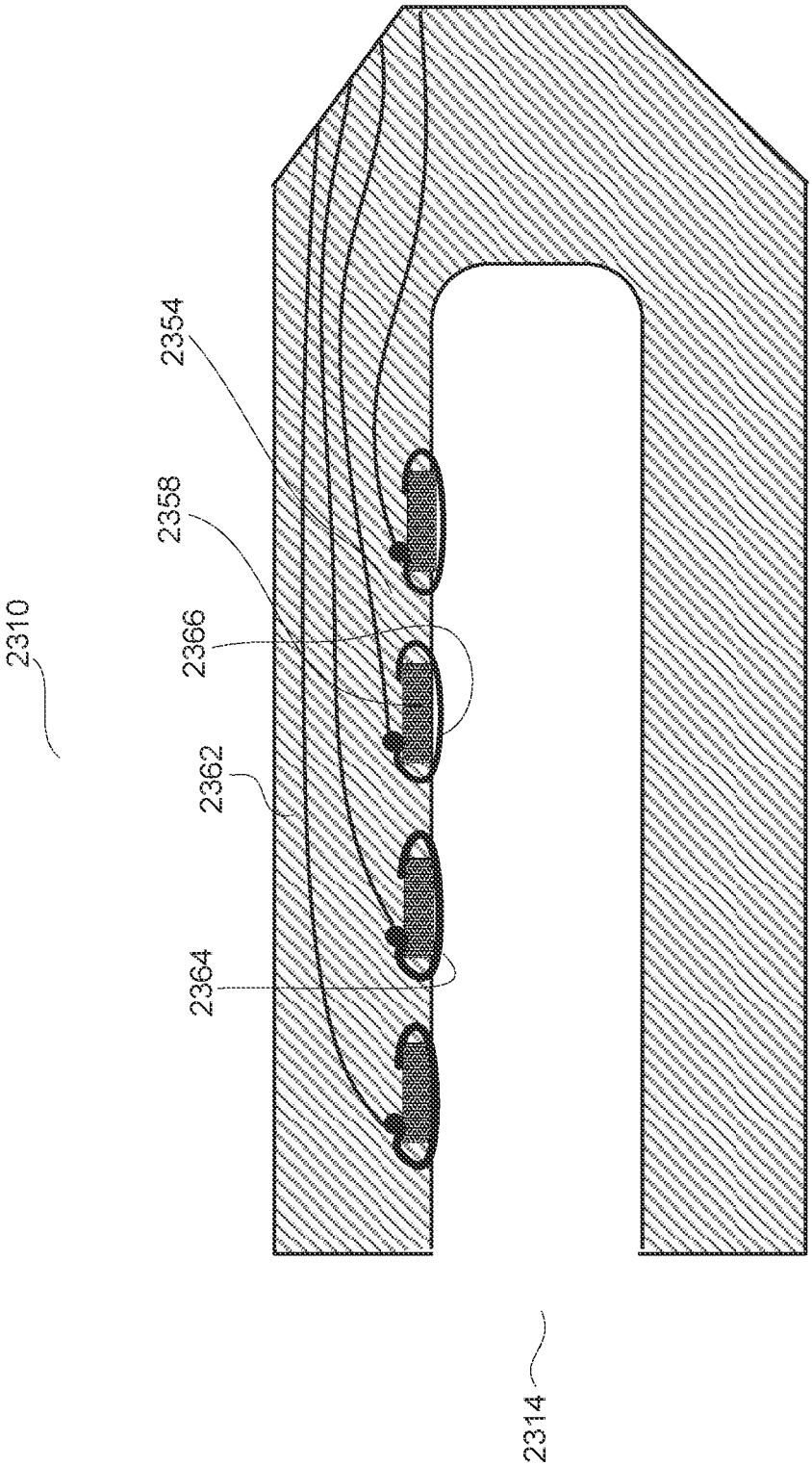

Fig. 26B

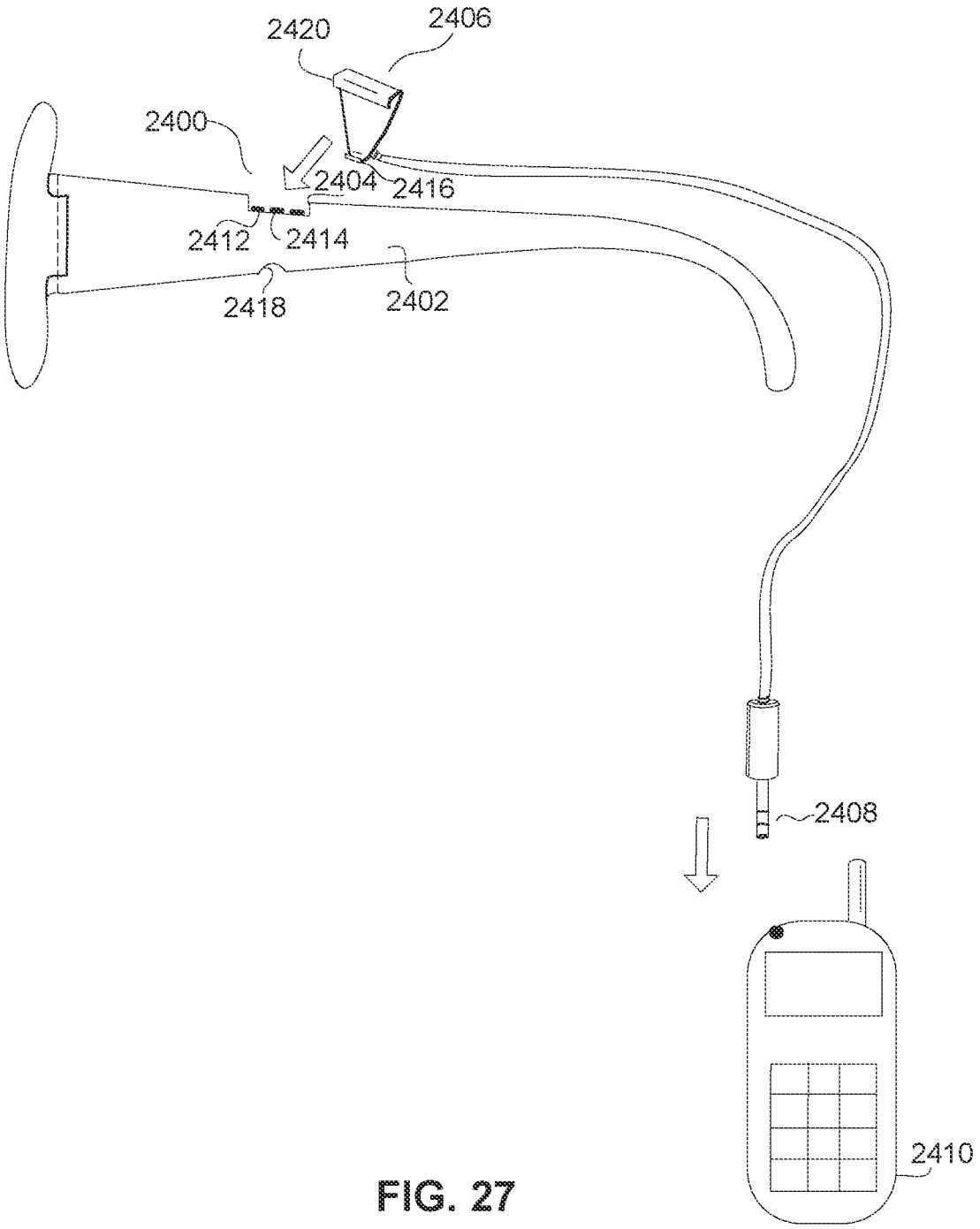

FIG. 27

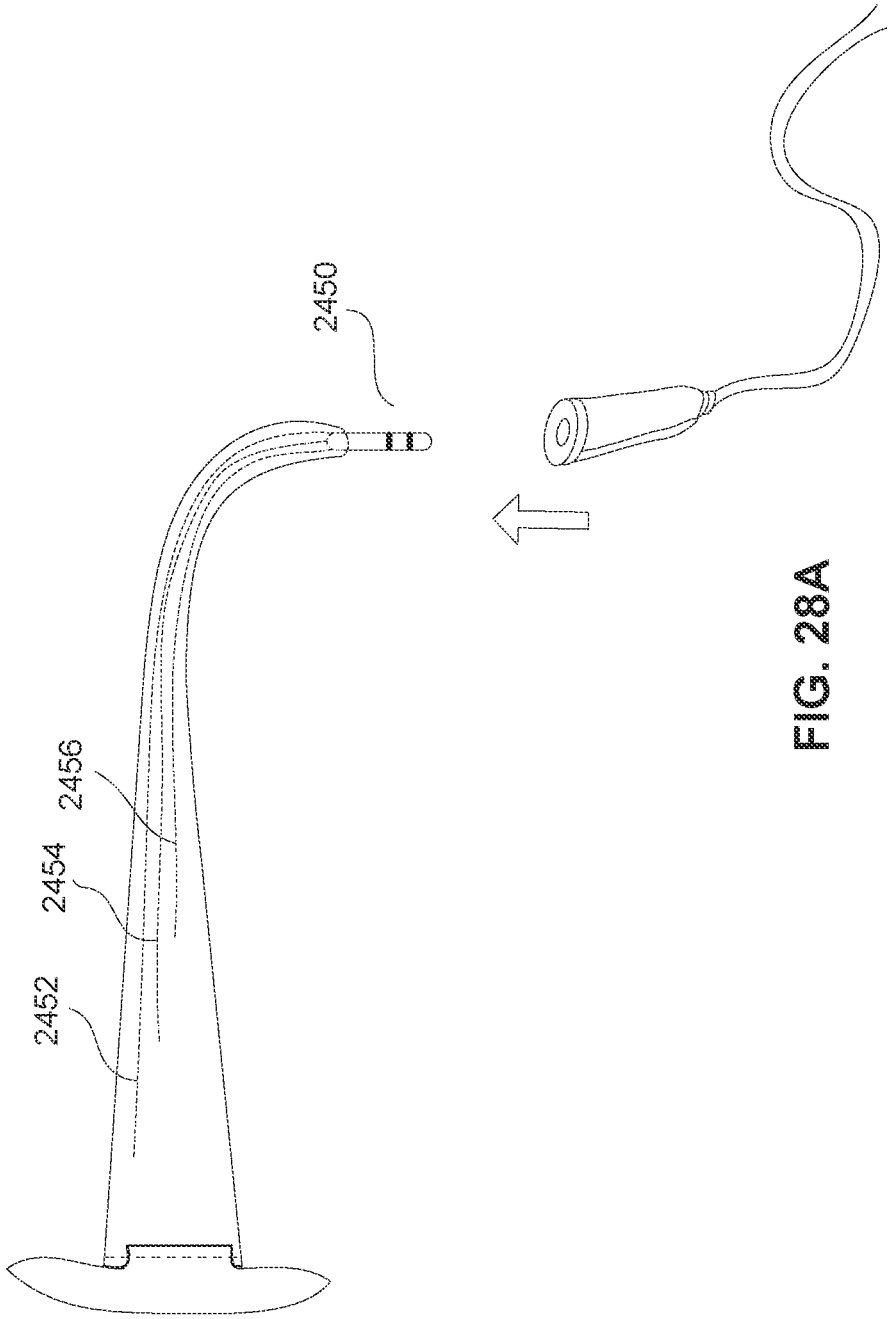

FIG. 28A

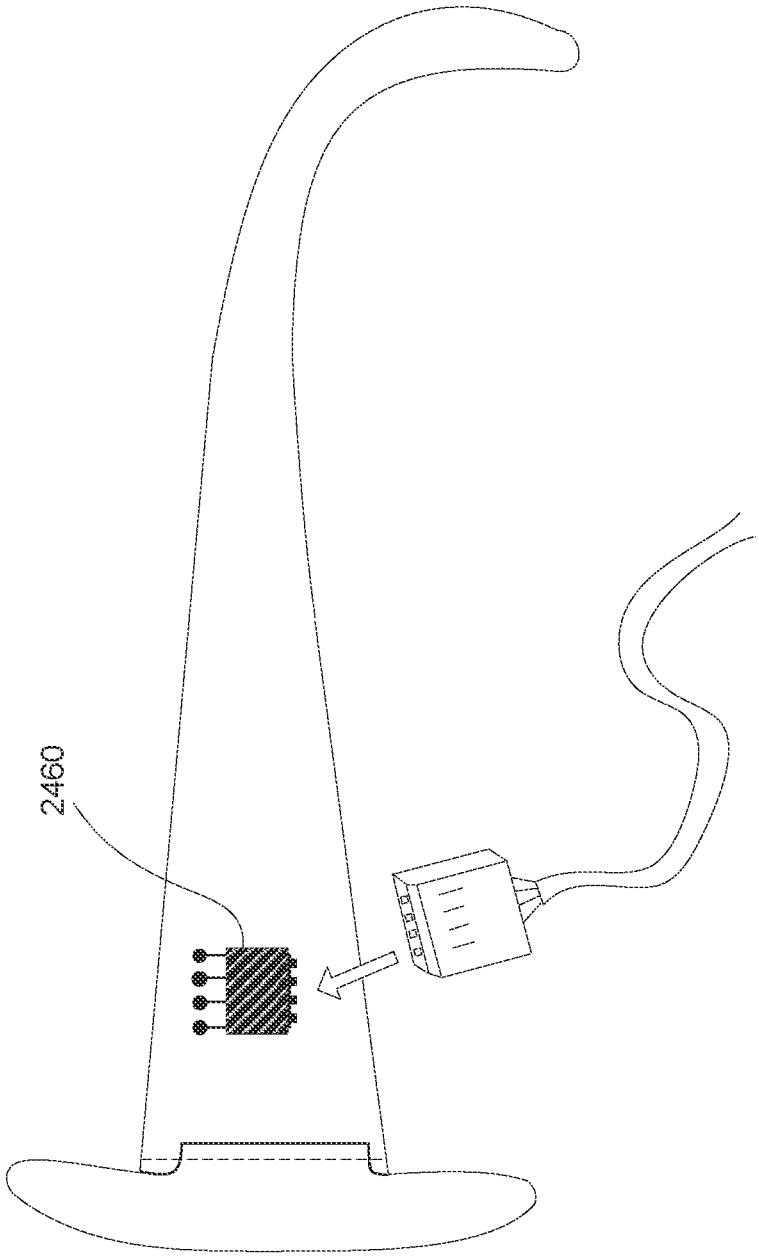

FIG. 28B

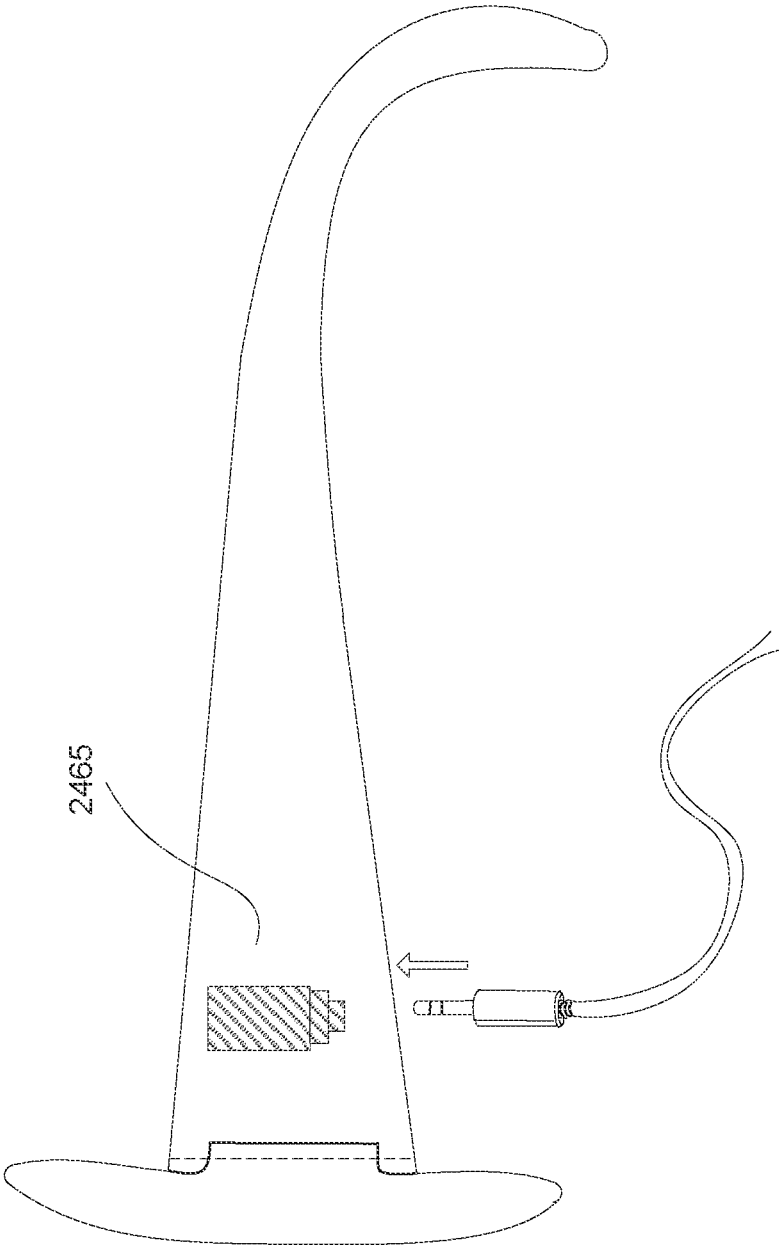

FIG. 28C

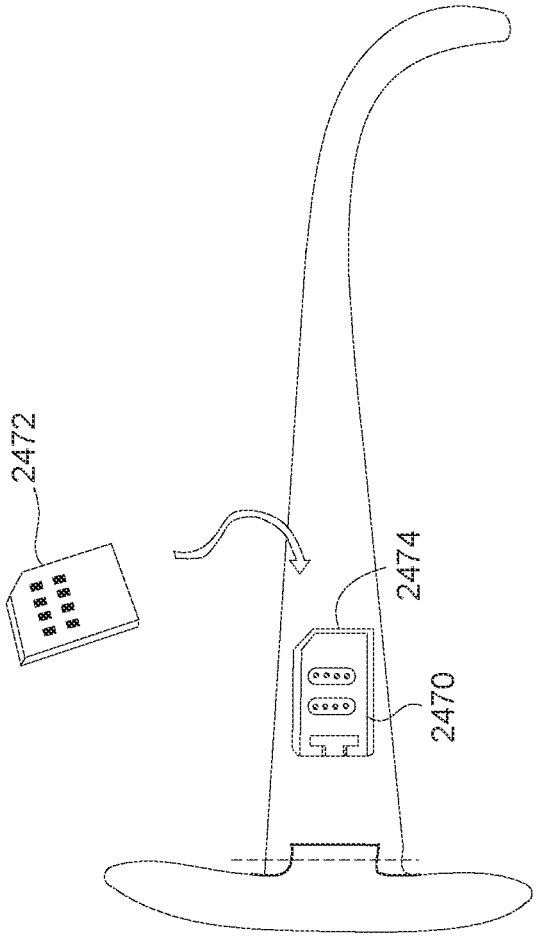

FIG. 28D

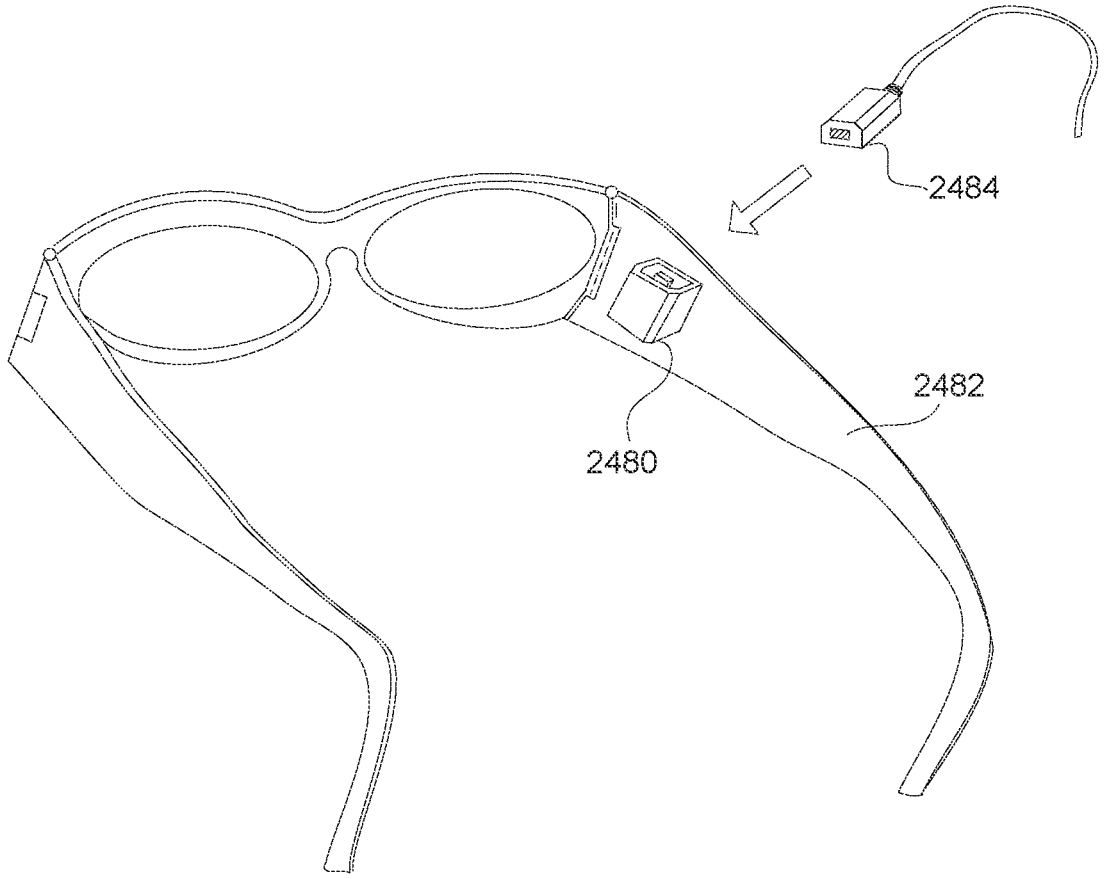

FIG. 28E

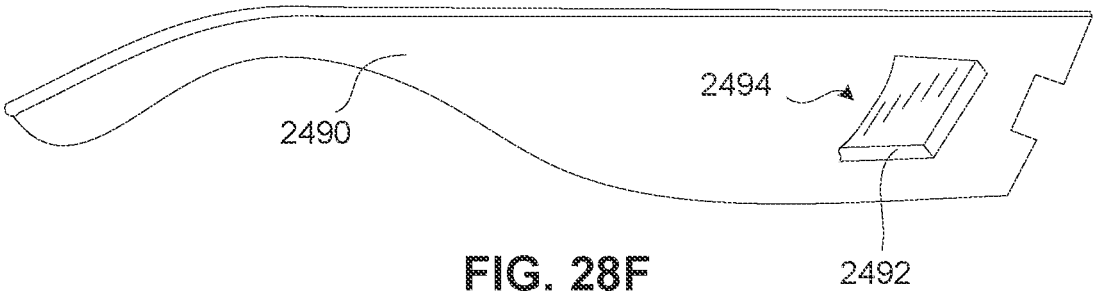

FIG. 28F

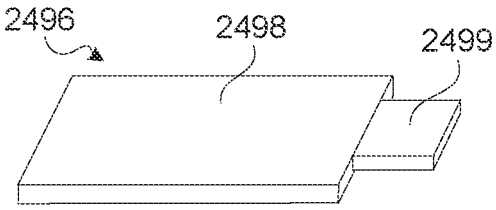

FIG. 28G

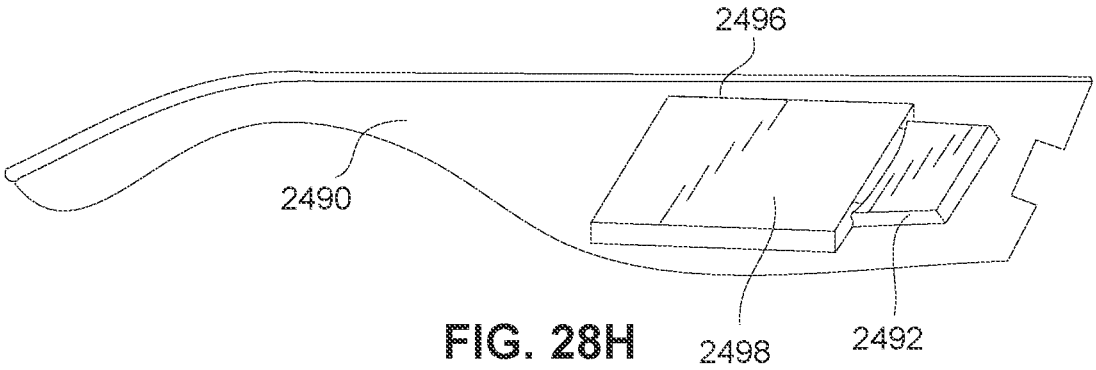

FIG. 28H

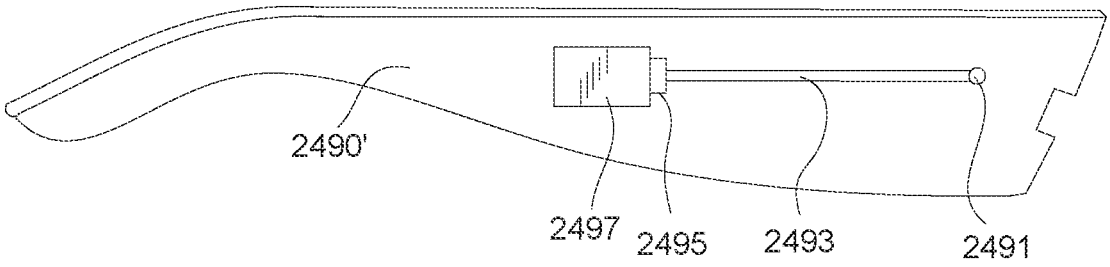

FIG. 28I

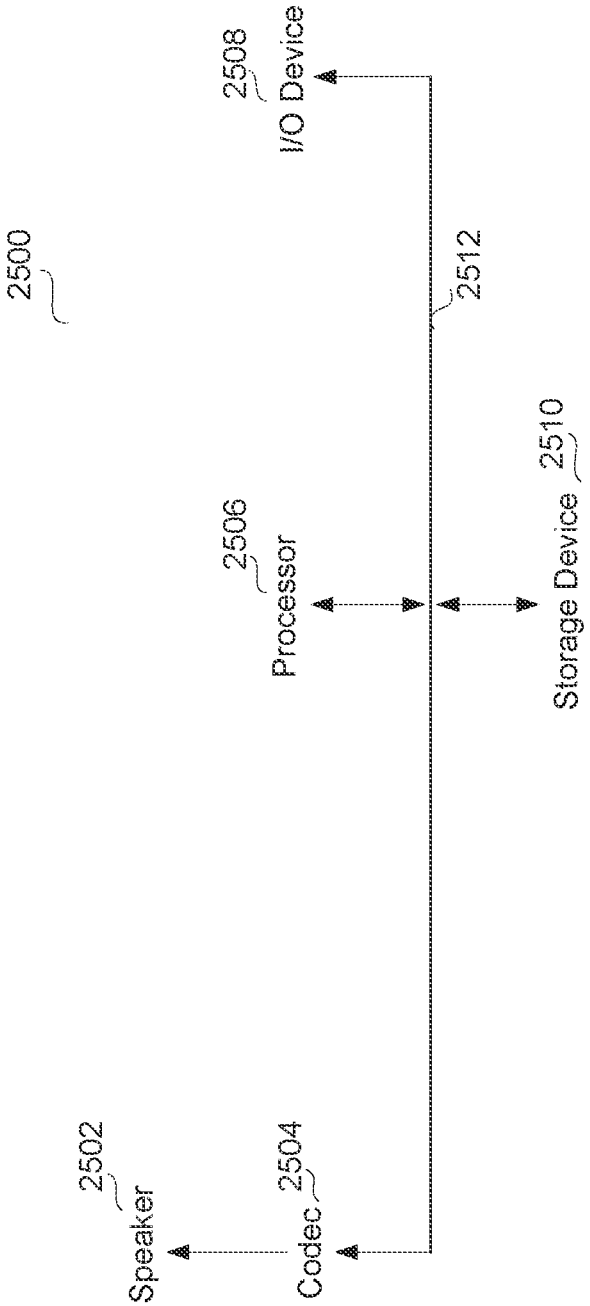
2500
2502
Speaker
2504
Codec
2506
Processor
2508
I/O Device
2510
Storage Device
2512

FIG. 29

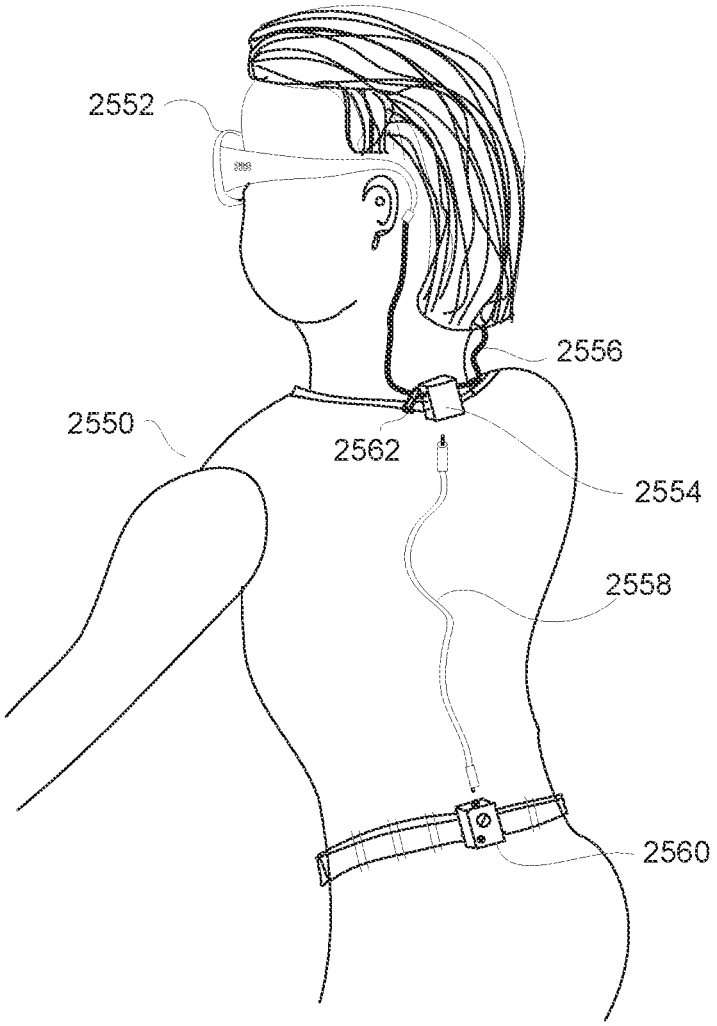

FIG. 30

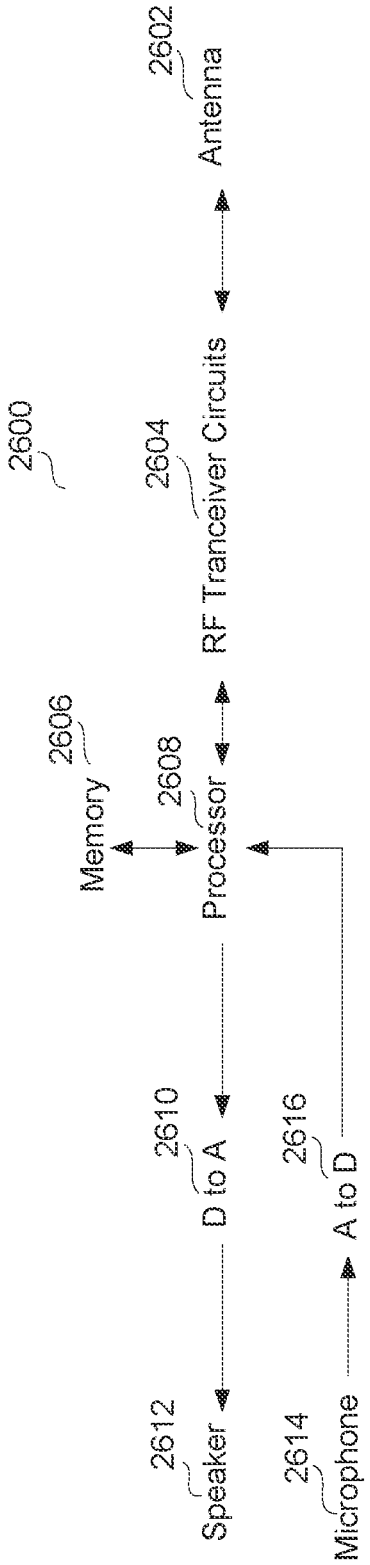

FIG. 31A

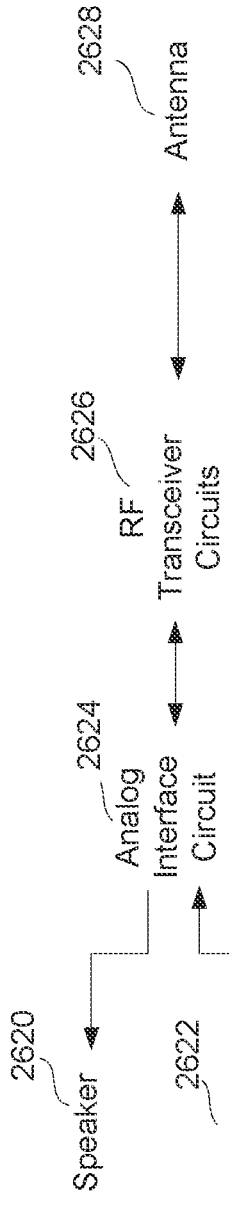

FIG. 31B

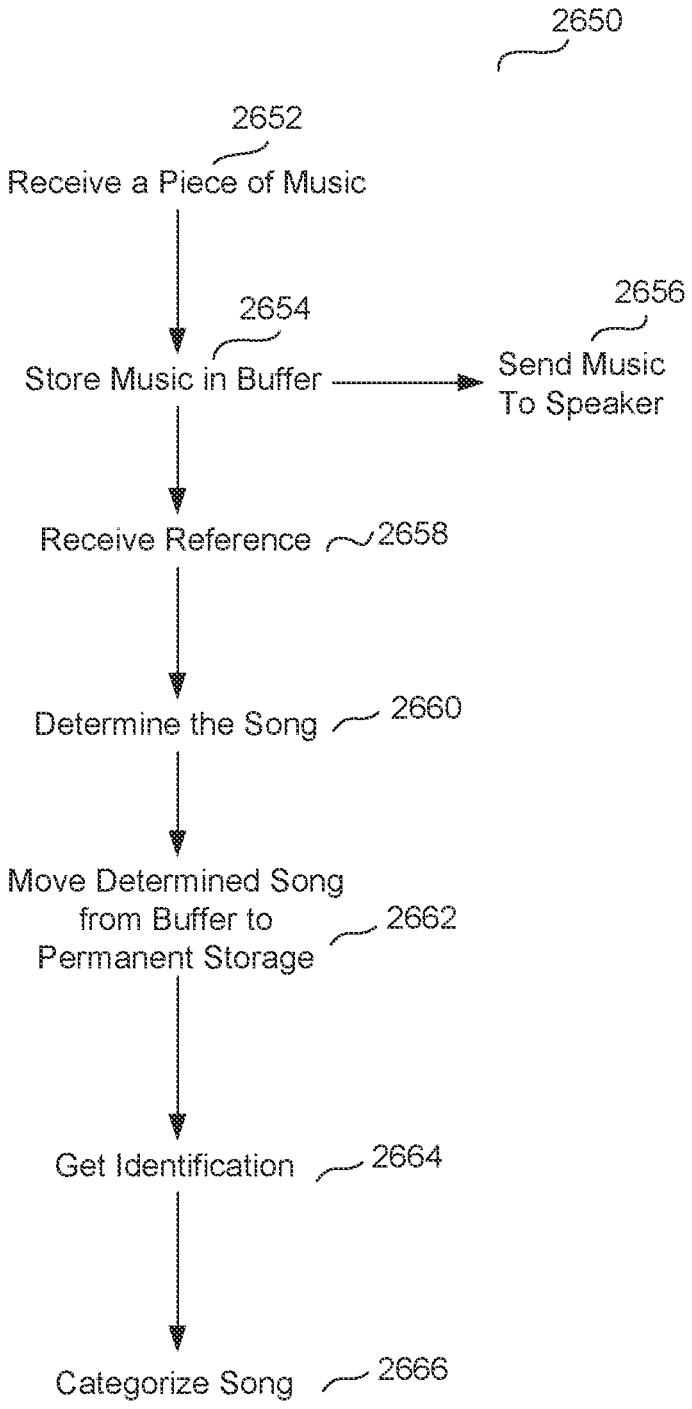
2650
2652
Receive a Piece of Music
2654
Store Music in Buffer
2656
Send Music To Speaker
Receive Reference
2658
Determine the Song
2660
Move Determined Song from Buffer to Permanent Storage
2662
Get Identification
2664
Categorize Song
2666

FIG. 32

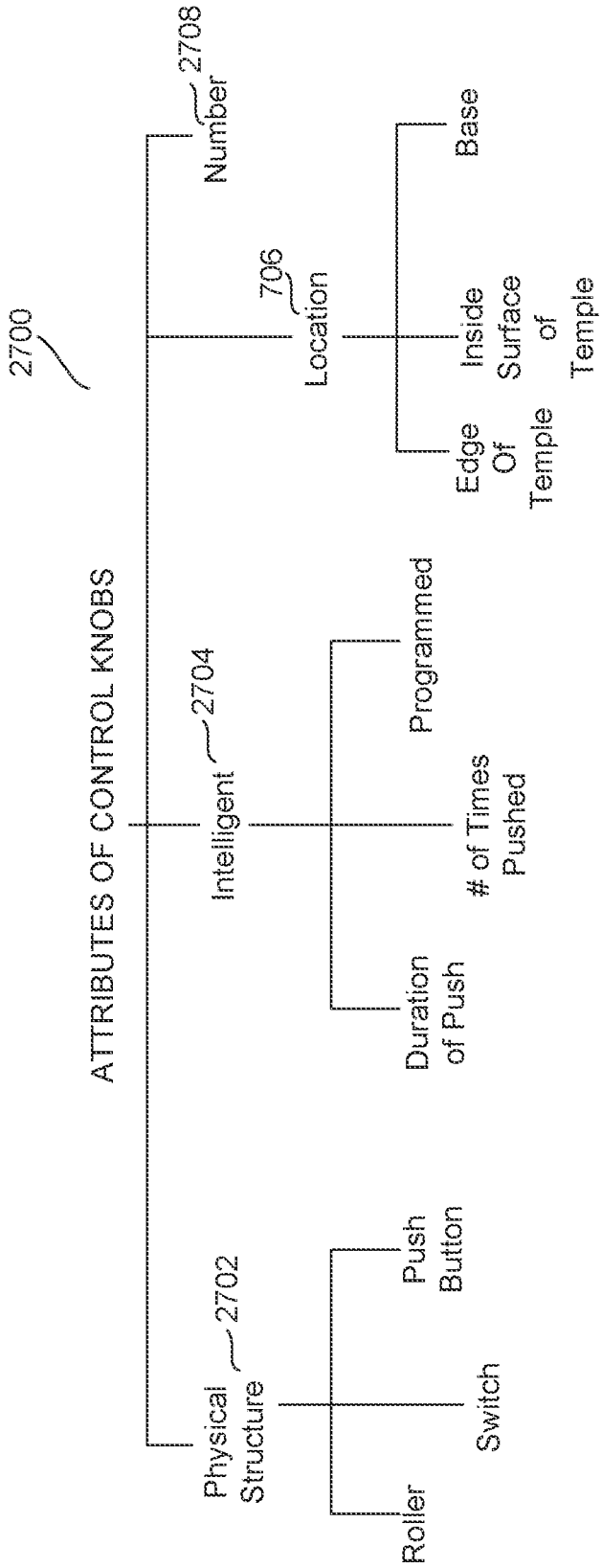
2700
ATTRIBUTES OF CONTROL KNOBS
Physical Structure
2702
Roller
Switch
Push Button
Intelligent
2704
Duration of Push
# of Times Pushed
Programmed
Location
706
Edge Of Temple
Inside Surface of Temple
Base
Number
2708

FIG. 33

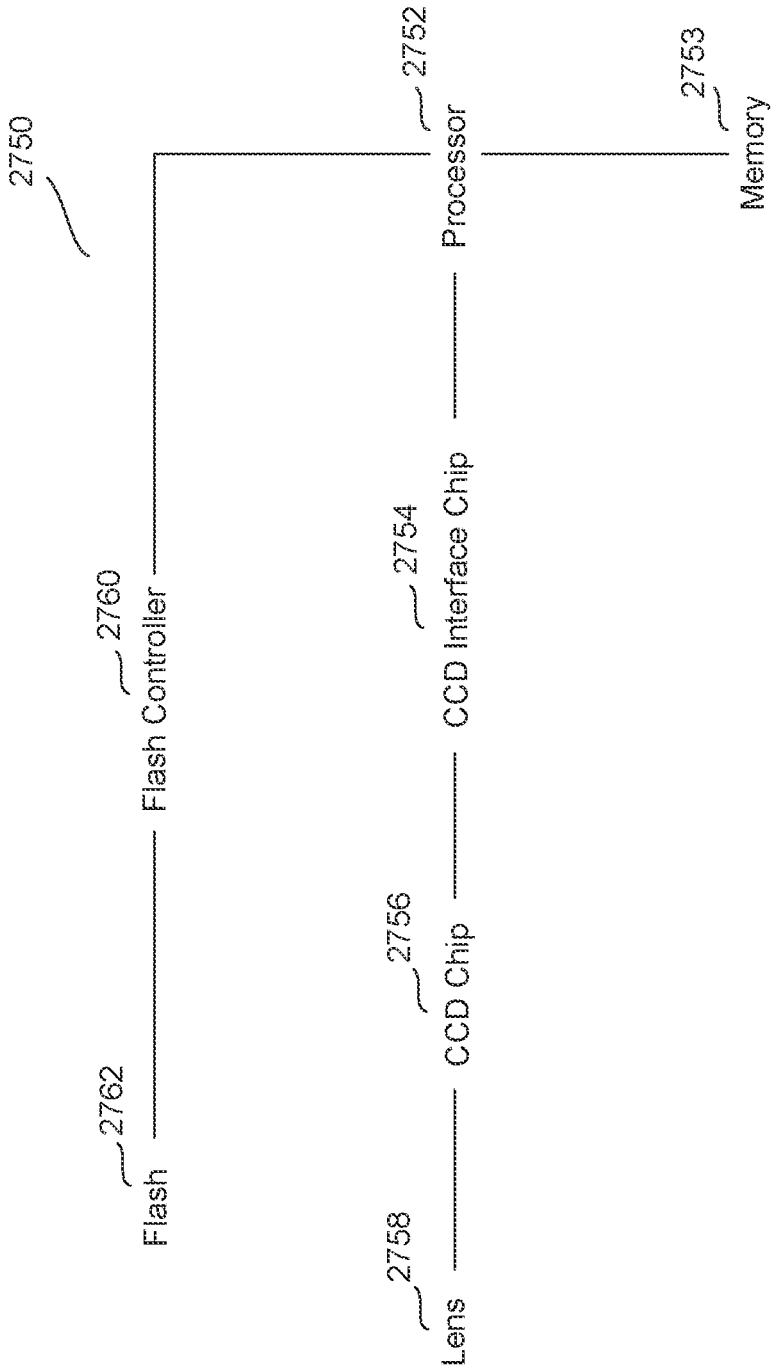
2750
2760
Flash Controller
2762
Flash
2752
Processor
2754
CCD Interface Chip
2756
CCD Chip
2758
Lens
2753
Memory

FIG. 34

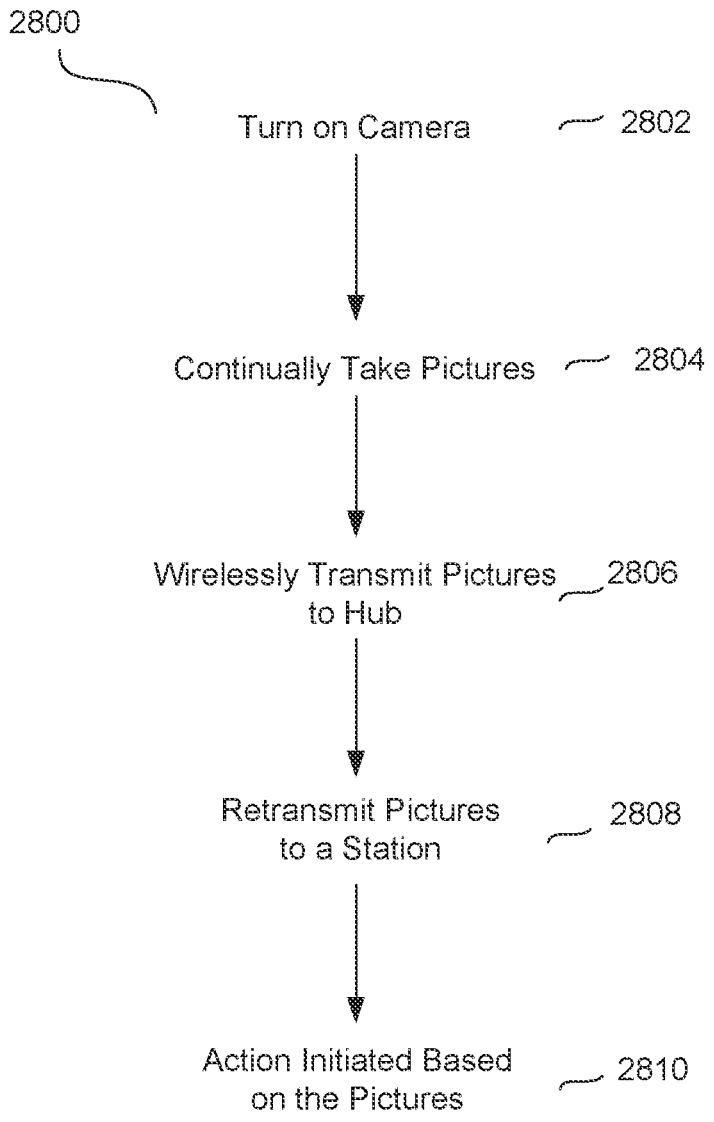
2800
Turn on Camera
2802
Continually Take Pictures
2804
Wirelessly Transmit Pictures to Hub
2806
Retransmit Pictures to a Station
2808
Action Initiated Based on the Pictures
2810

FIG. 35

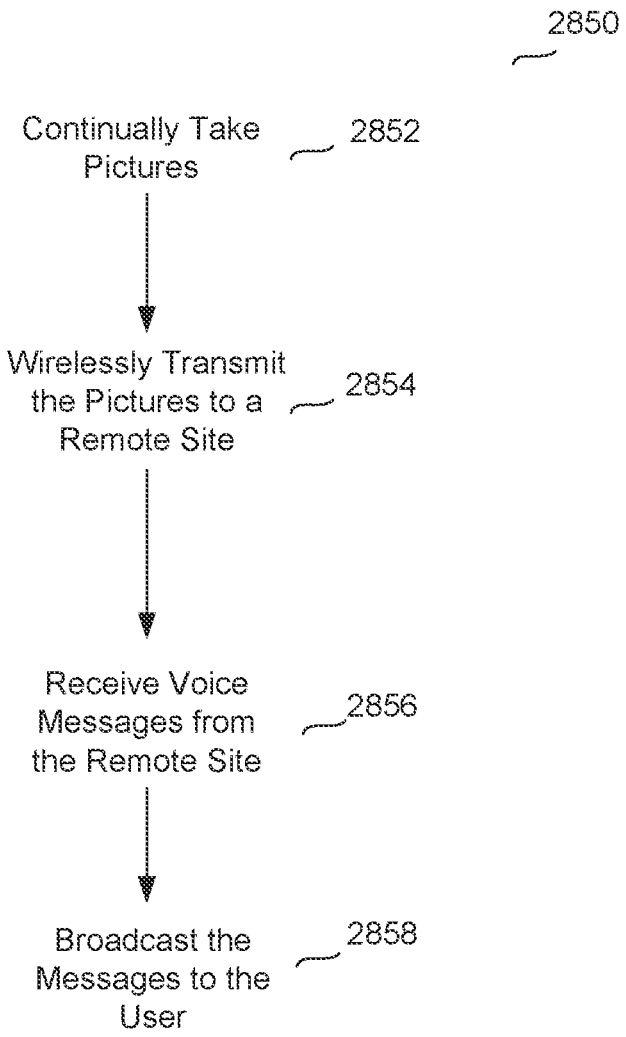
2850
Continually Take Pictures
2852
Wirelessly Transmit the Pictures to a Remote Site
2854
Receive Voice Messages from the Remote Site
2856
Broadcast the Messages to the User
2858

FIG. 36

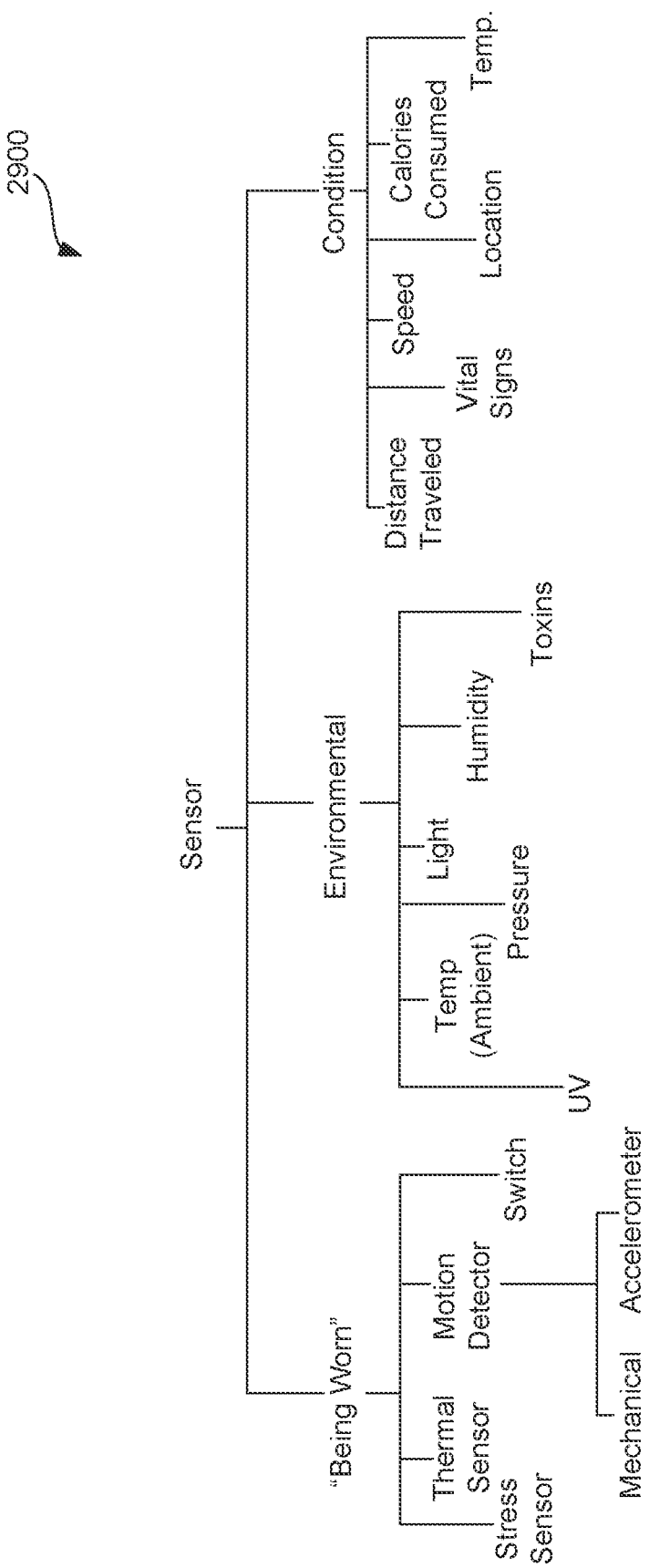
2900
Sensor
Condition
Distance Traveled
Speed
Vital Signs
Calories Consumed
Location
Temp.
Environmental
Temp (Ambient)
Light
Pressure
Humidity
Toxins
UV
"Being Worn"
Thermal Sensor
Stress Sensor
Motion Detector
Switch
Mechanical
Accelerometer

FIG. 37A

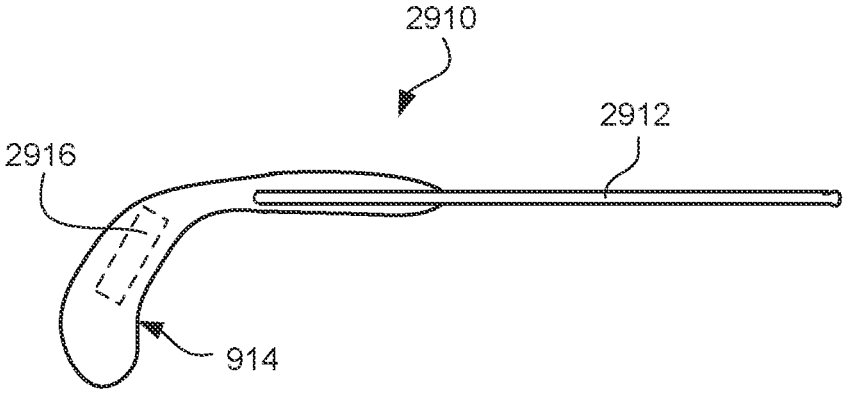

FIG. 37B

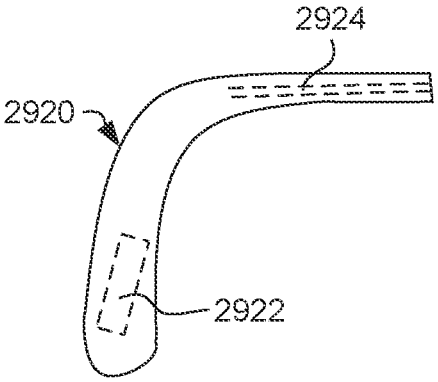

FIG. 37C

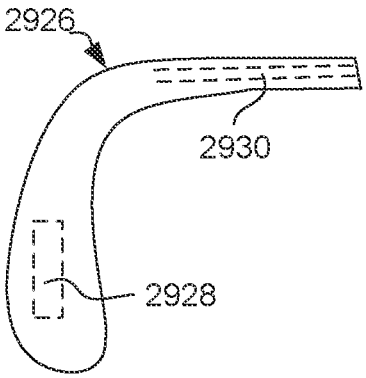

FIG. 37D

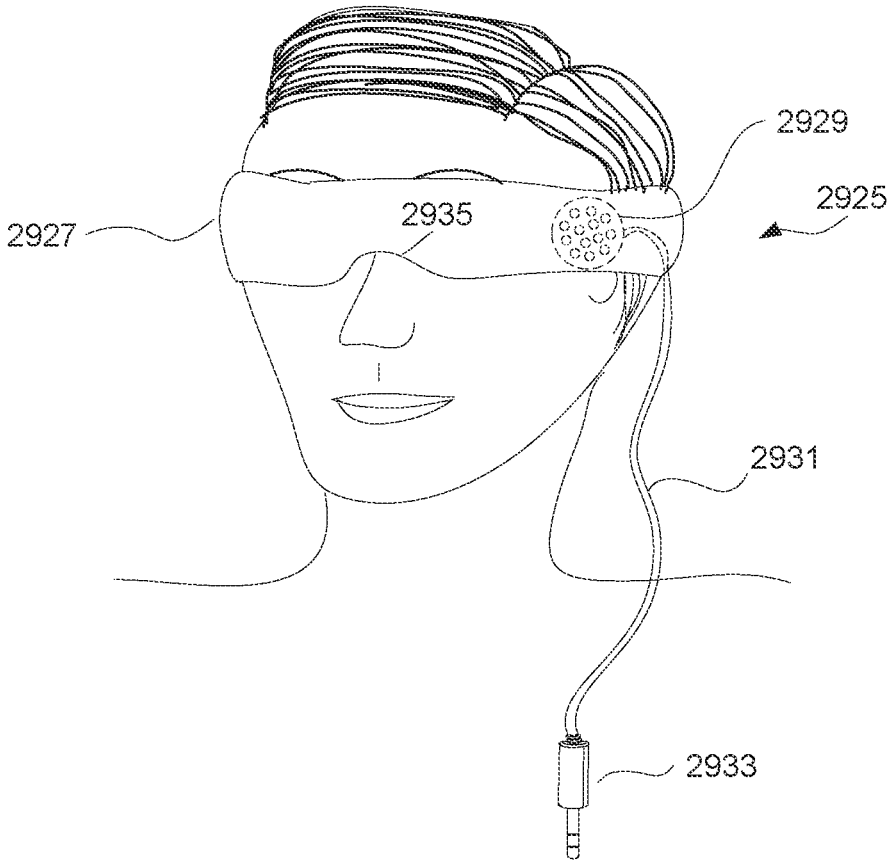

FIG. 38

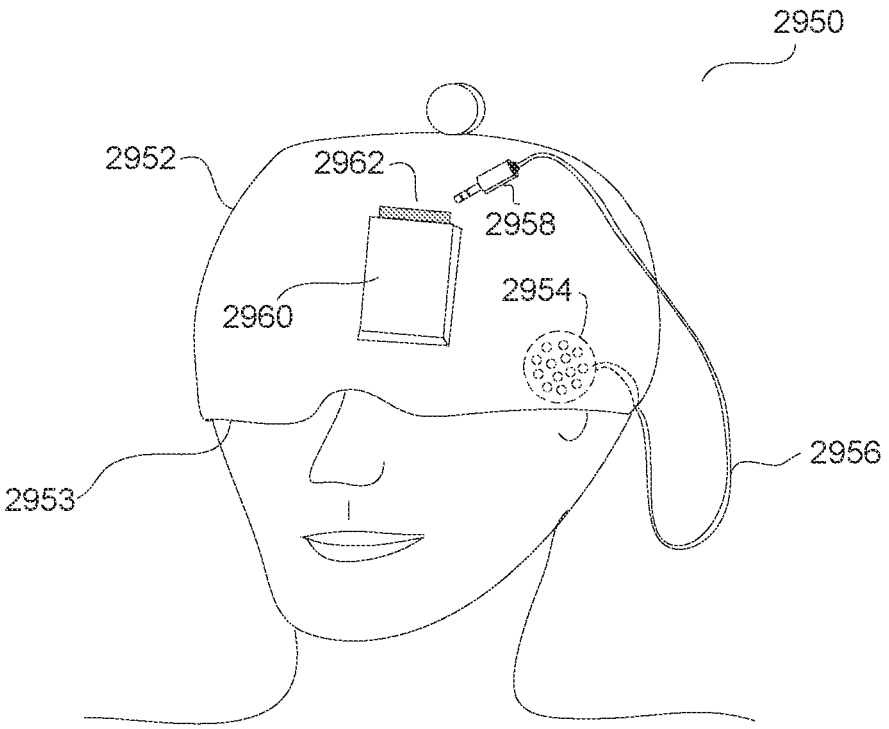

FIG. 39

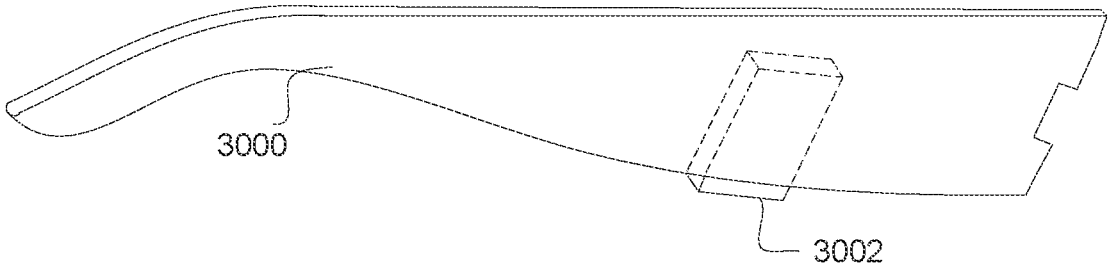

FIG. 40A

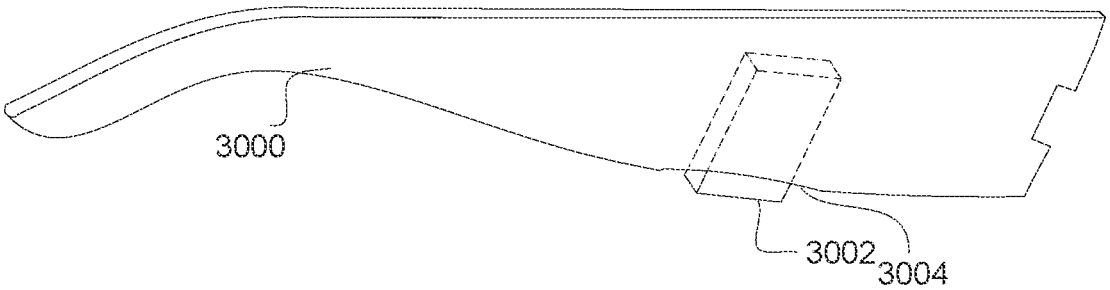

FIG. 40B

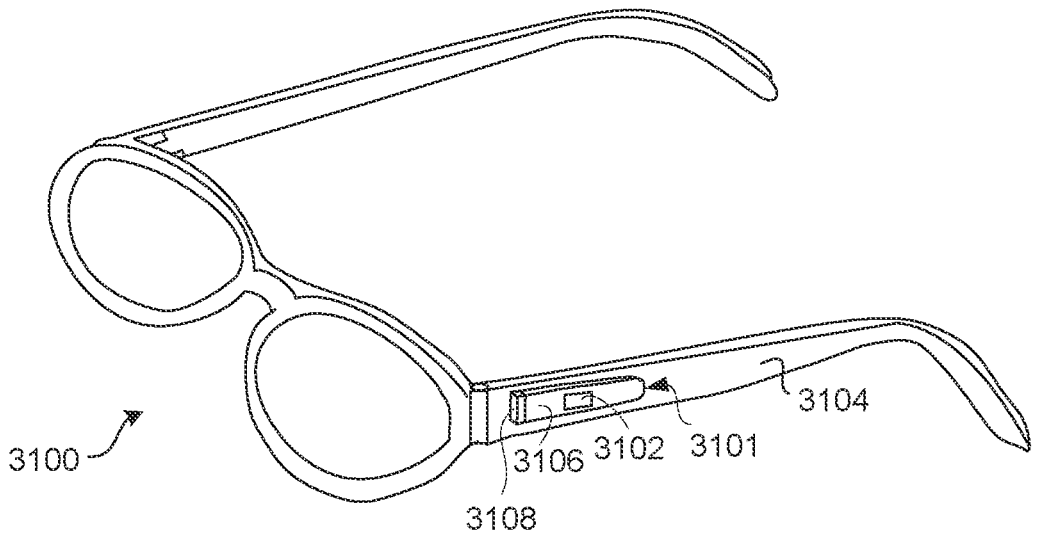

FIG. 41A

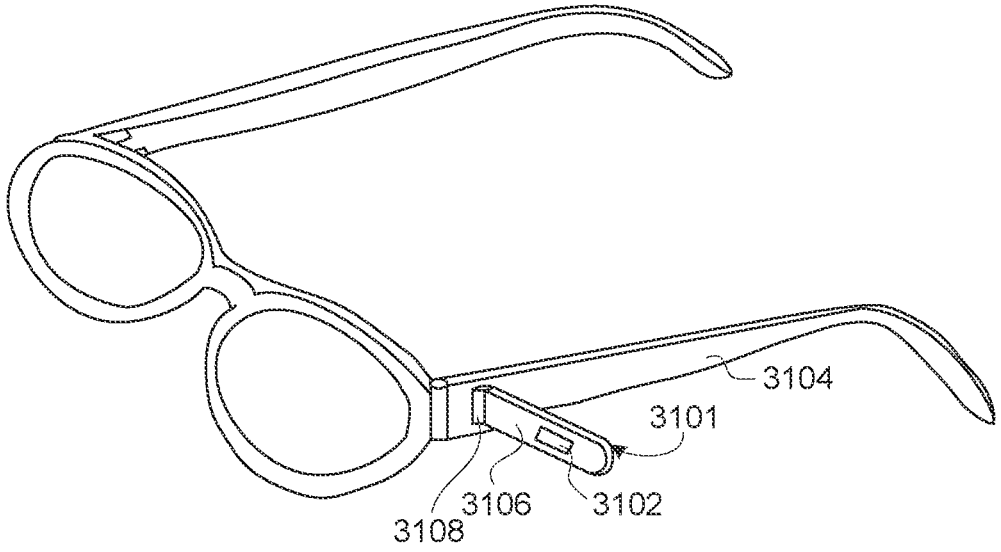

FIG. 41B

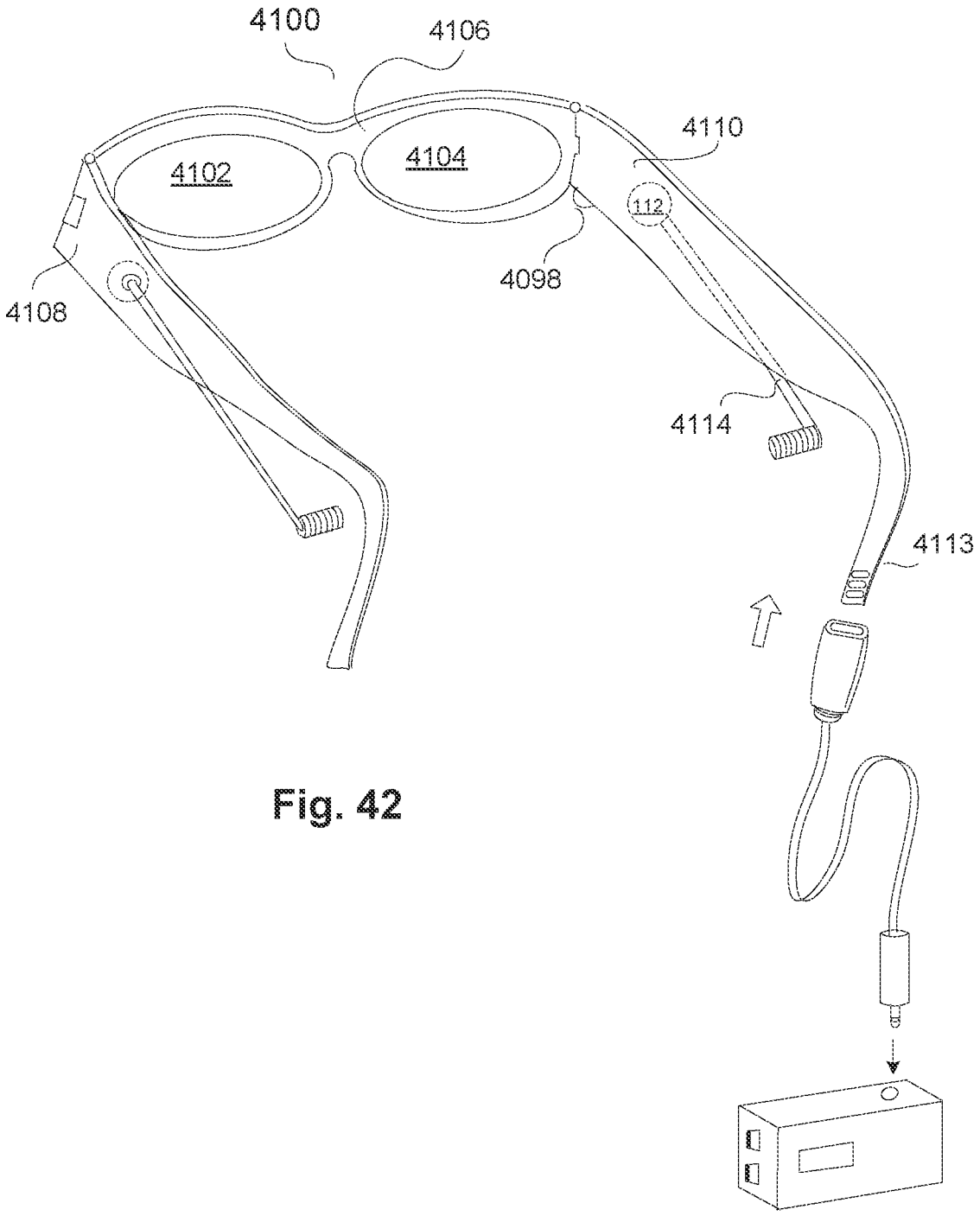

Fig. 42

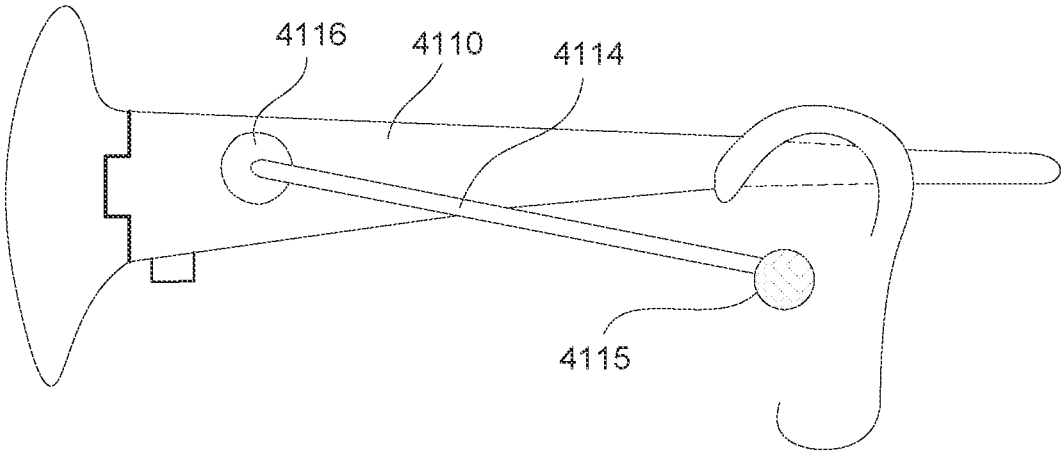

Fig. 43

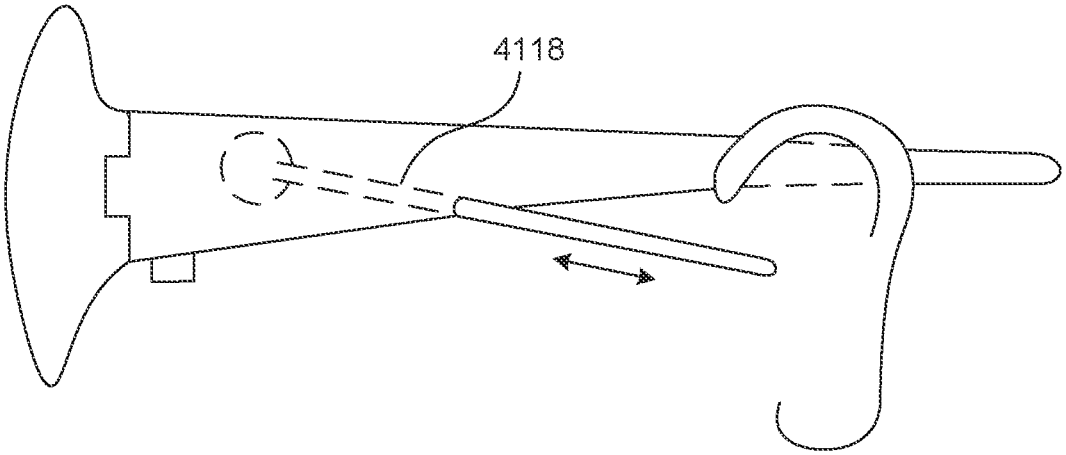

Fig. 44

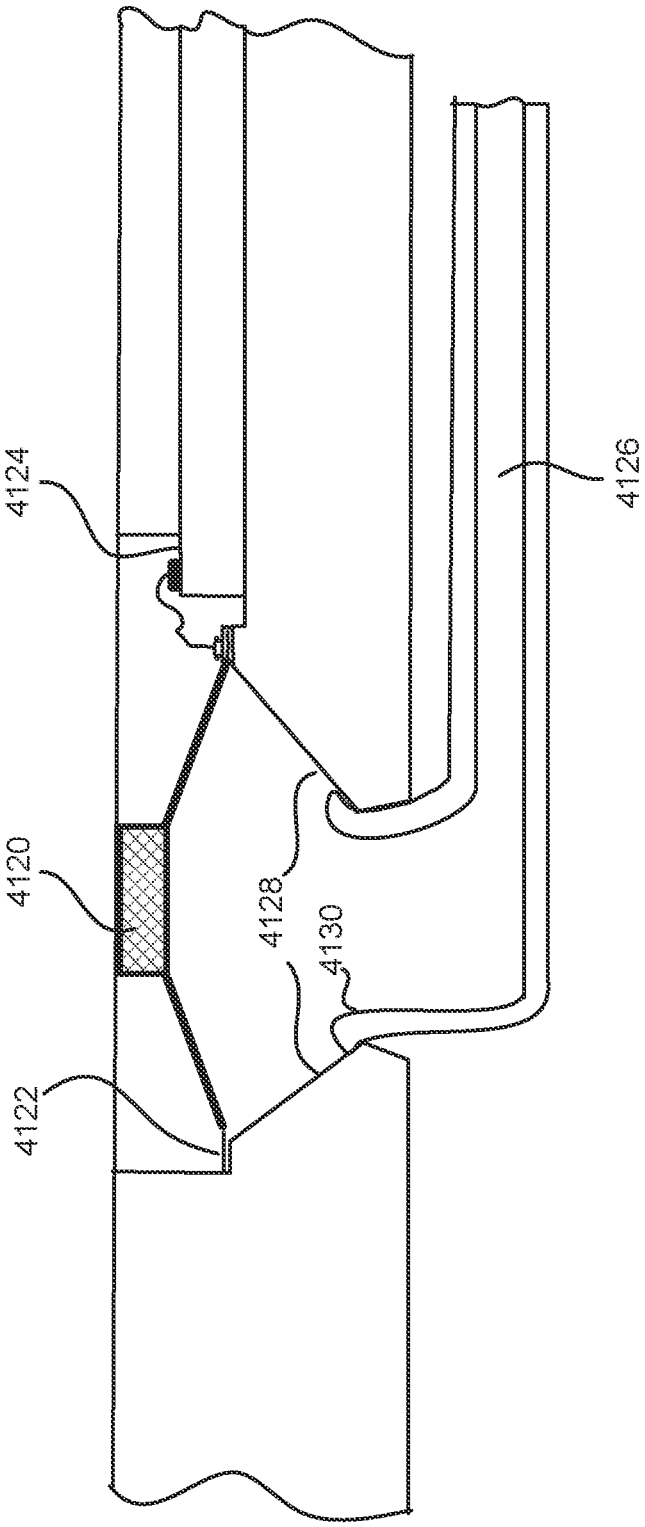

Fig. 45

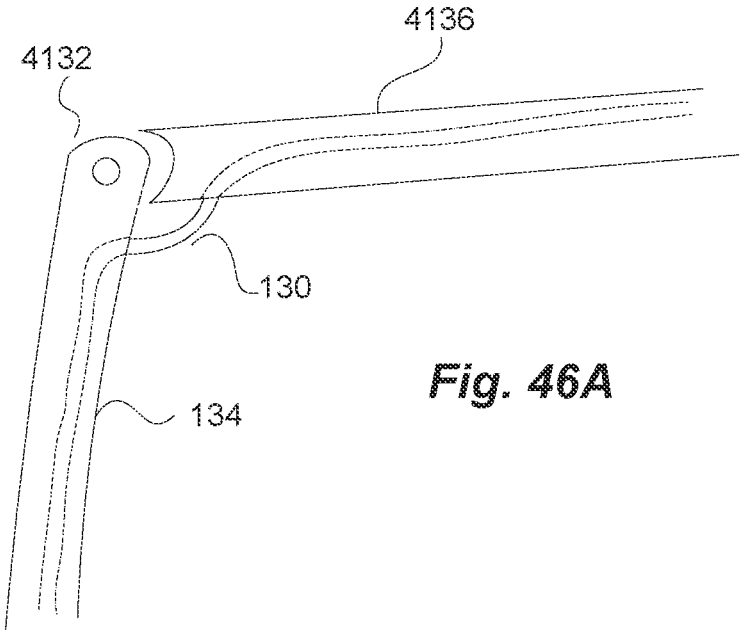

Fig. 46A

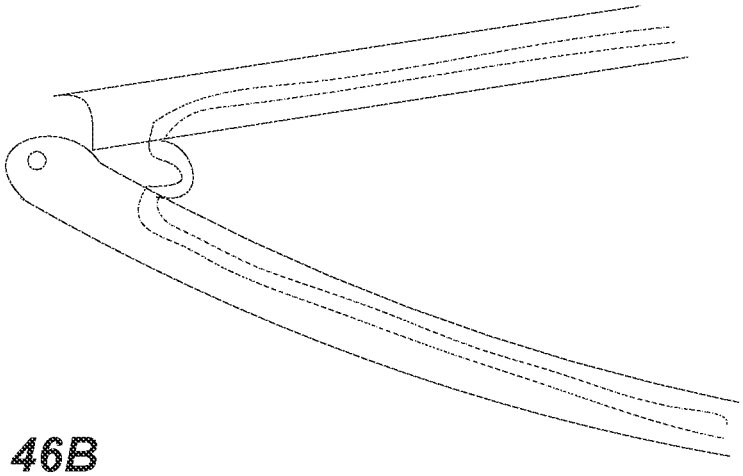

Fig. 46B

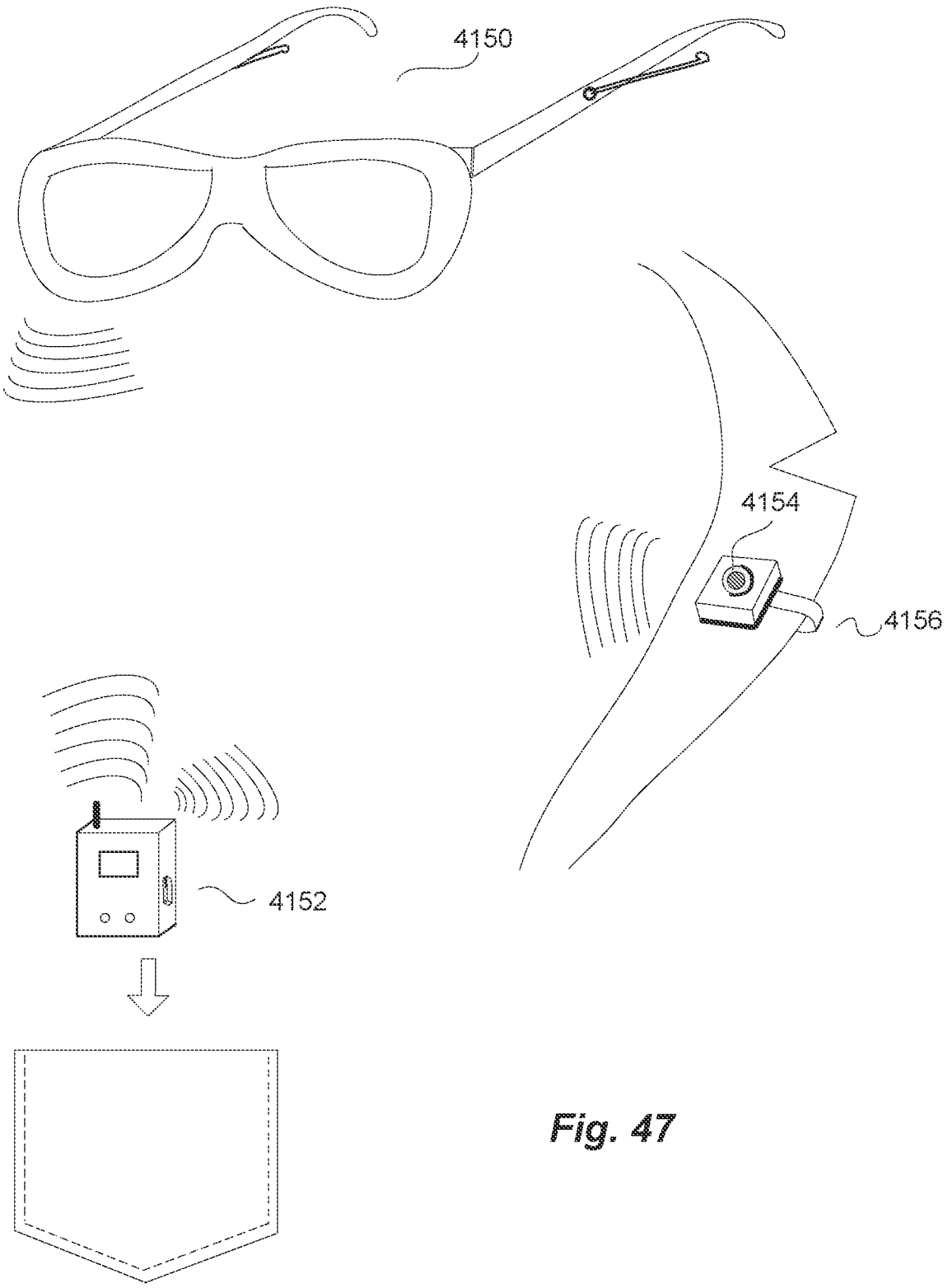

Fig. 47

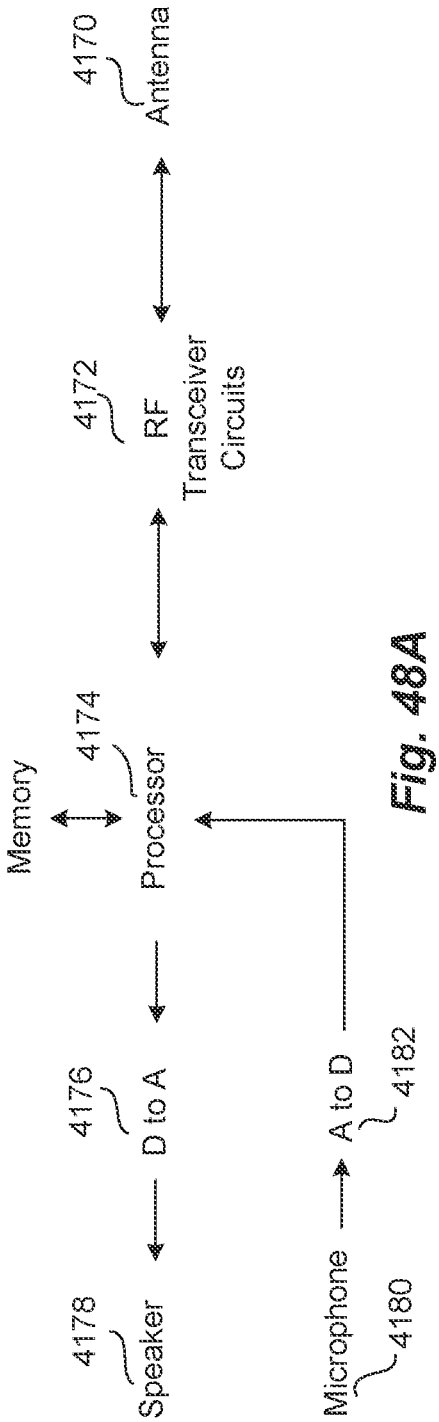

Fig. 48A

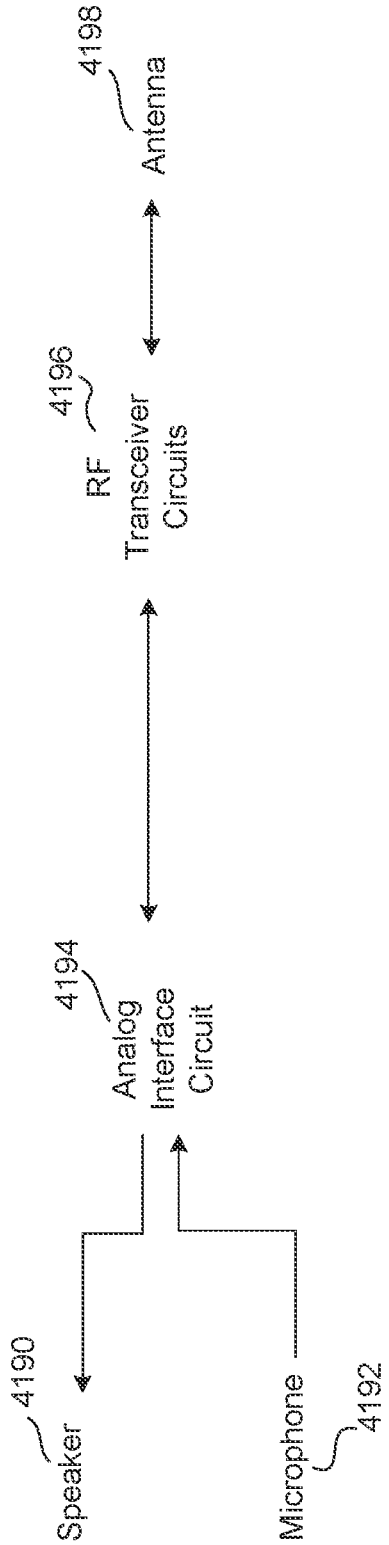

Fig. 48B

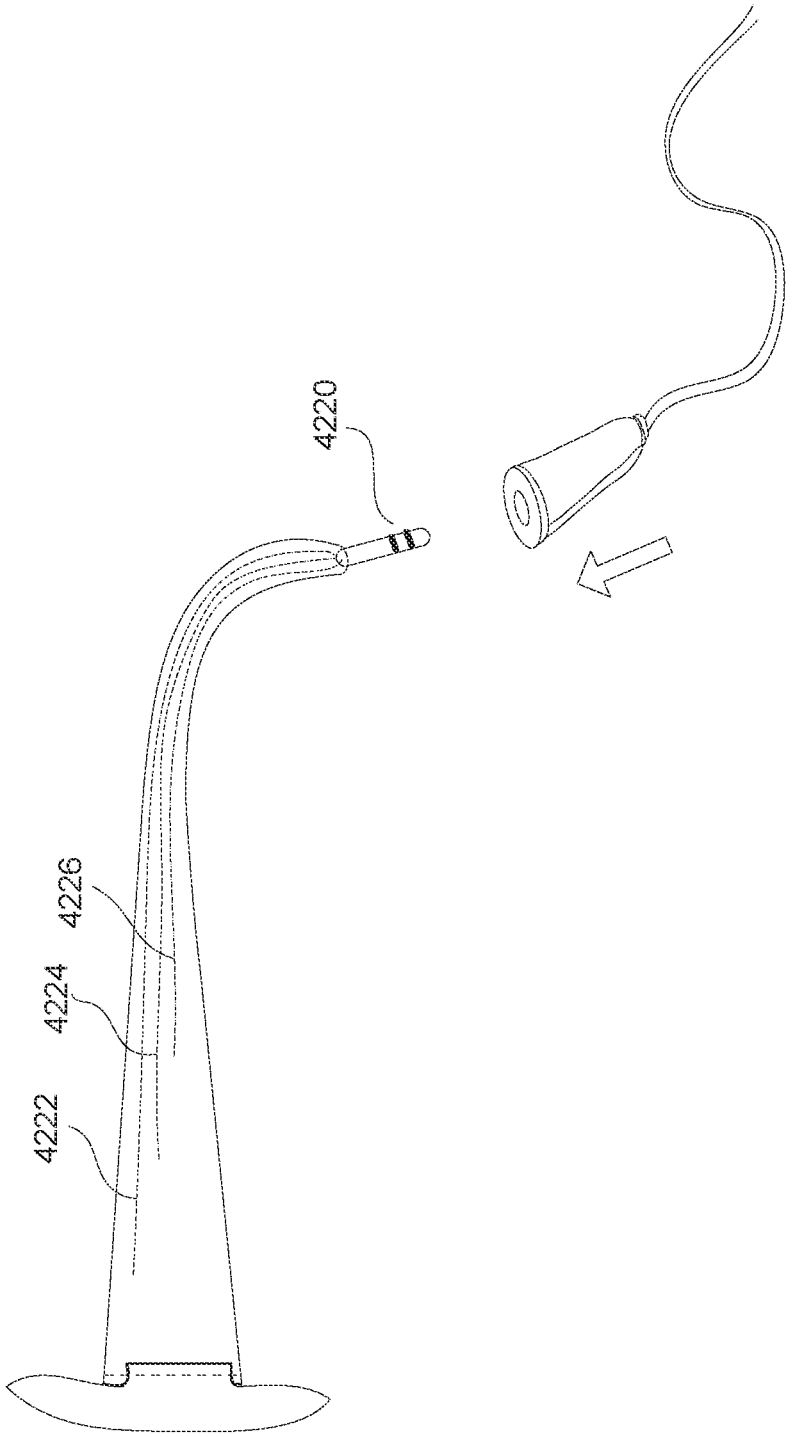

Fig. 49

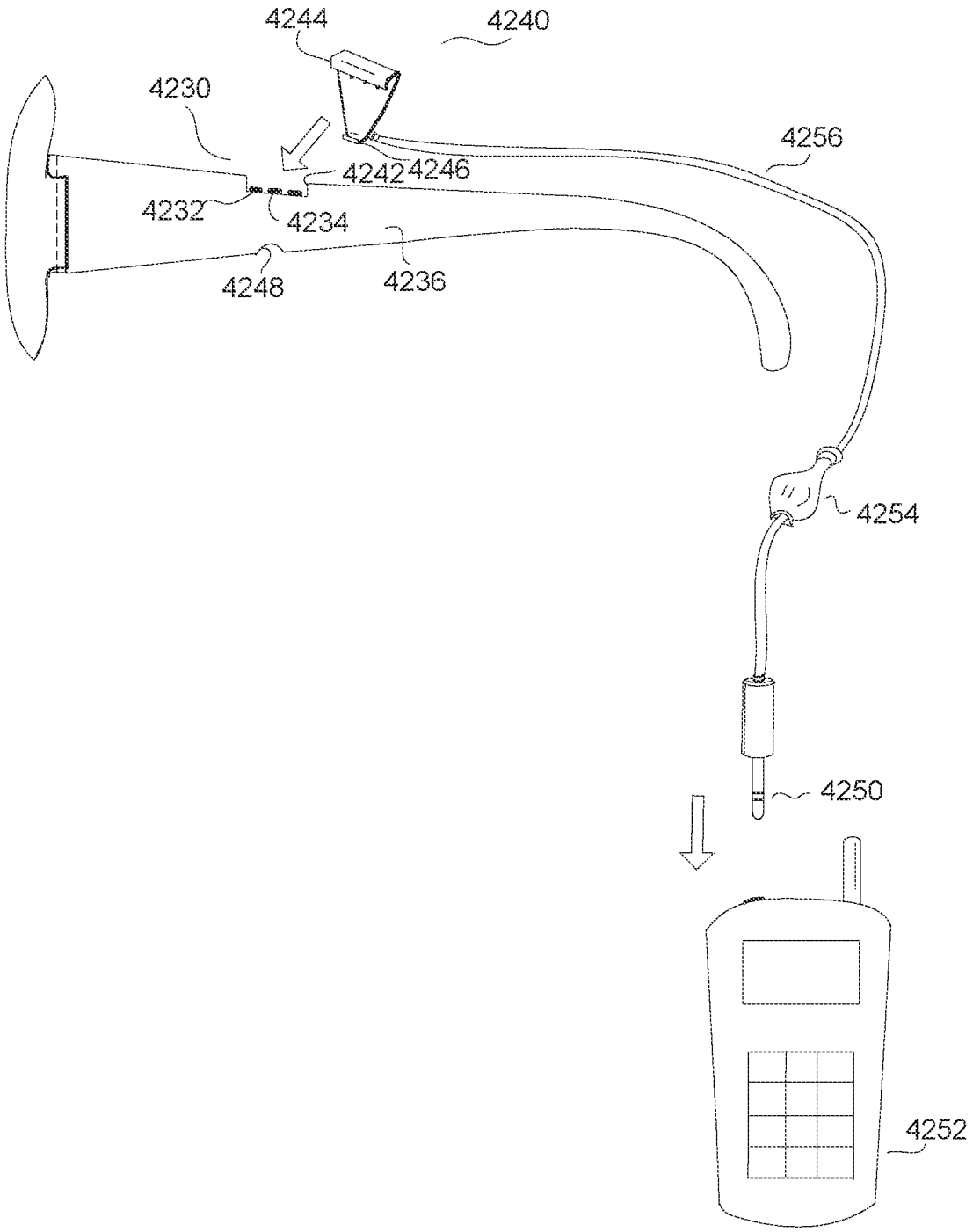
4244
4240
4230
4256
4242
4246
4232
4234
4248
4236
4254
4250
4252

Fig. 50

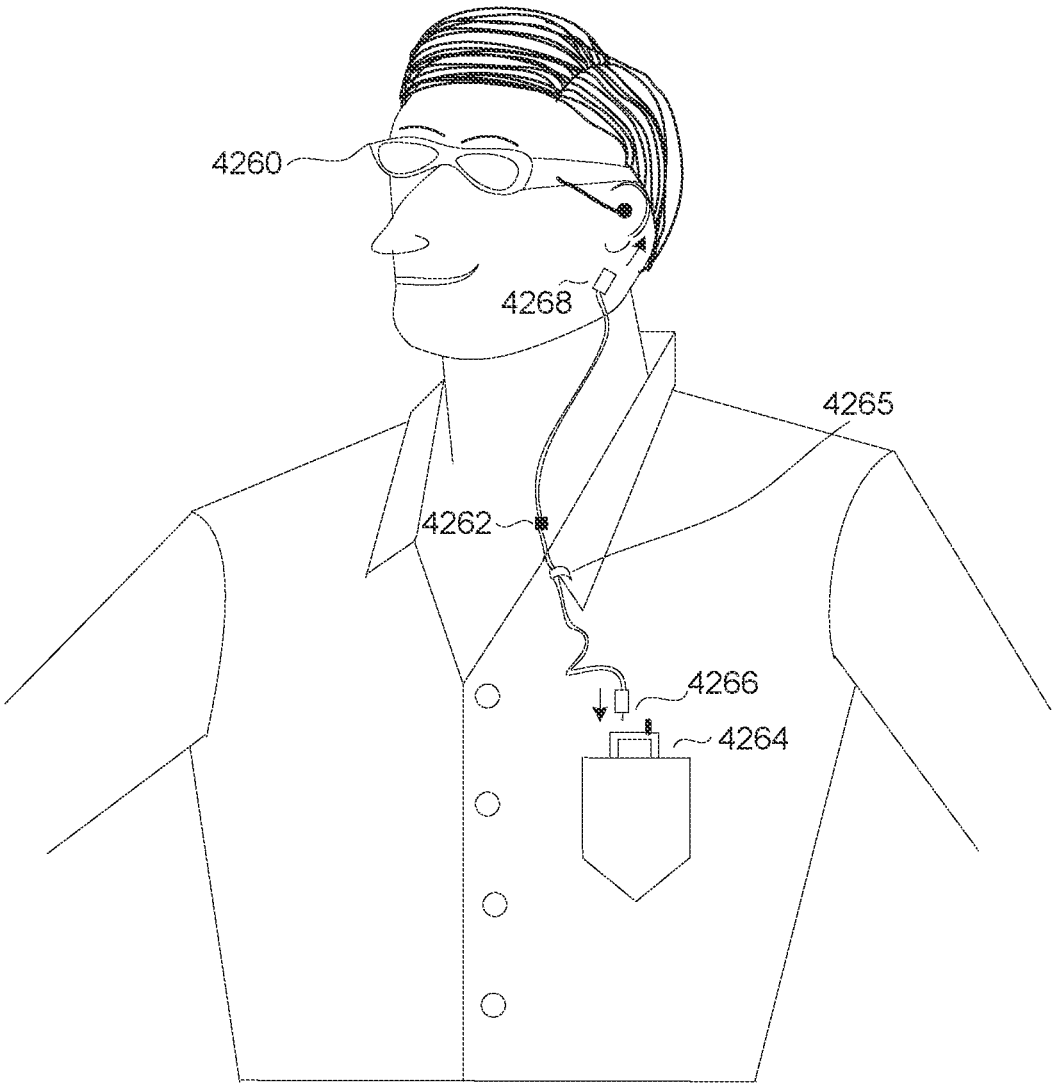

Fig. 51

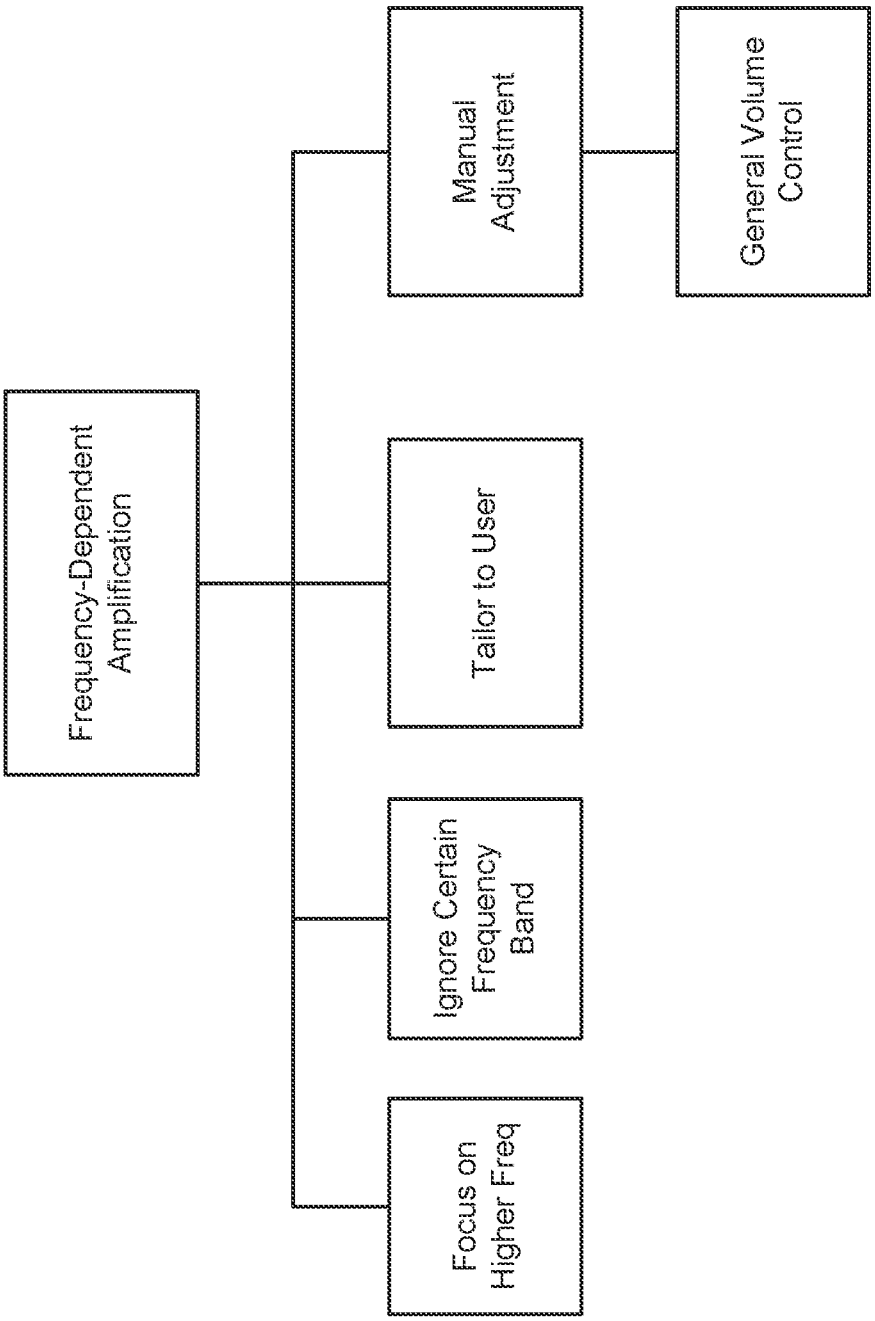
Frequency-Dependent Amplification
Focus on Higher Freq
Ignore Certain Frequency Band
Tailor to User
Manual Adjustment
General Volume Control

FIG. 52

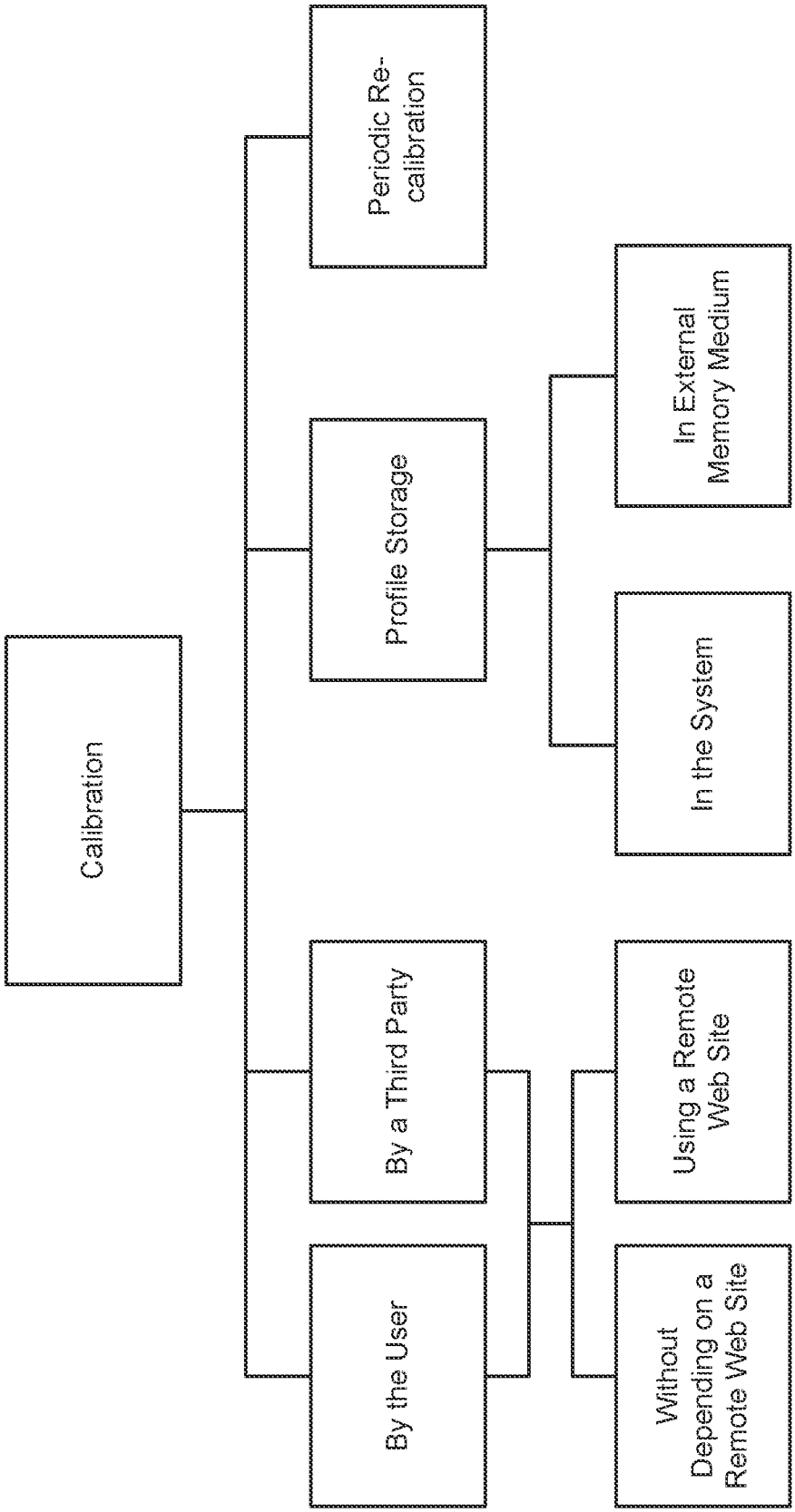
Calibration
By the User
By a Third Party
Profile Storage
Periodic Re-calibration
Without Depending on a Remote Web Site
Using a Remote Web Site
In the System
In External Memory Medium

FIG. 53

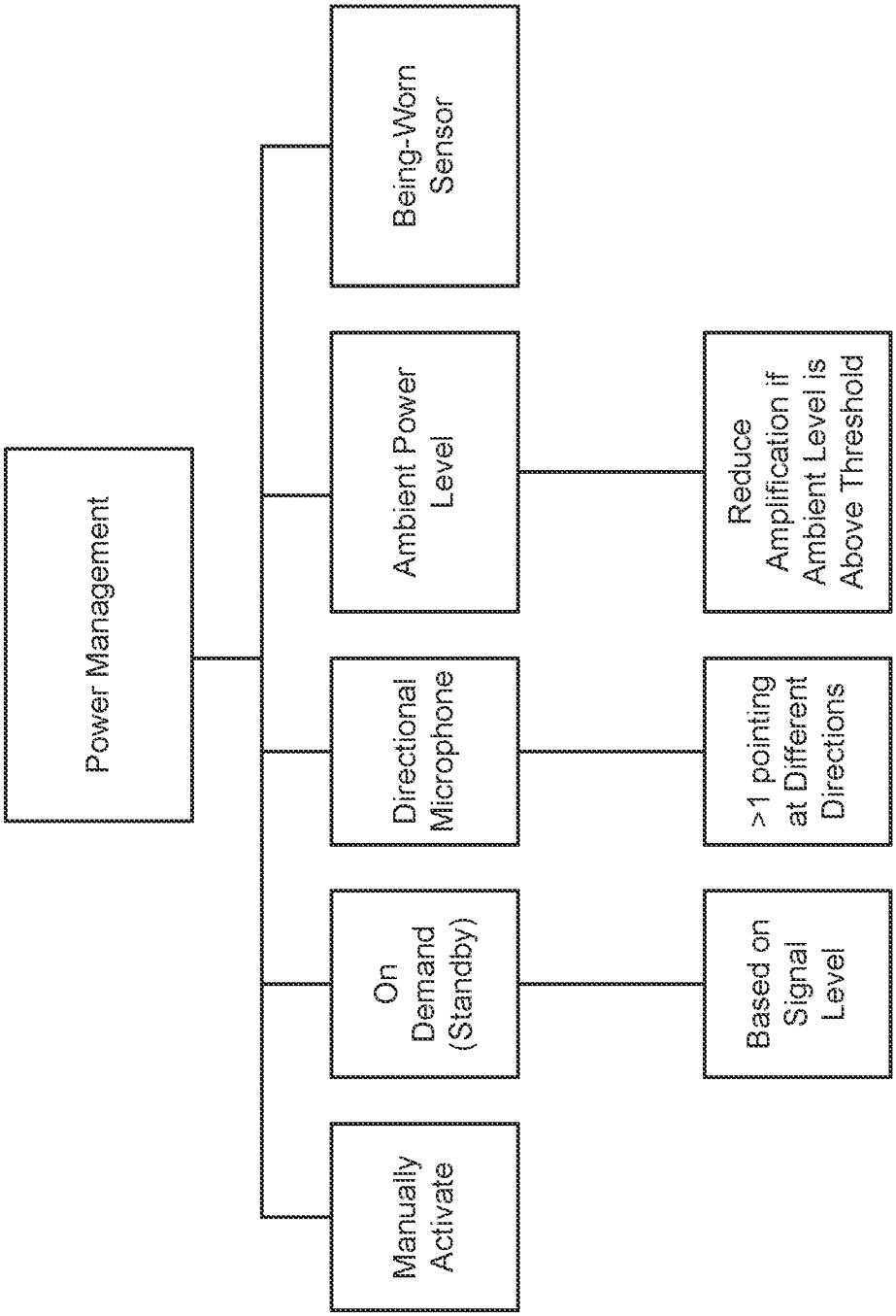
Power Management
Manually Activate
On Demand (Standby)
Directional Microphone
Ambient Power Level
Being-Worn Sensor
Based on Signal Level
>1 pointing at Different Directions
Reduce Amplification if Ambient Level is Above Threshold

FIG. 54

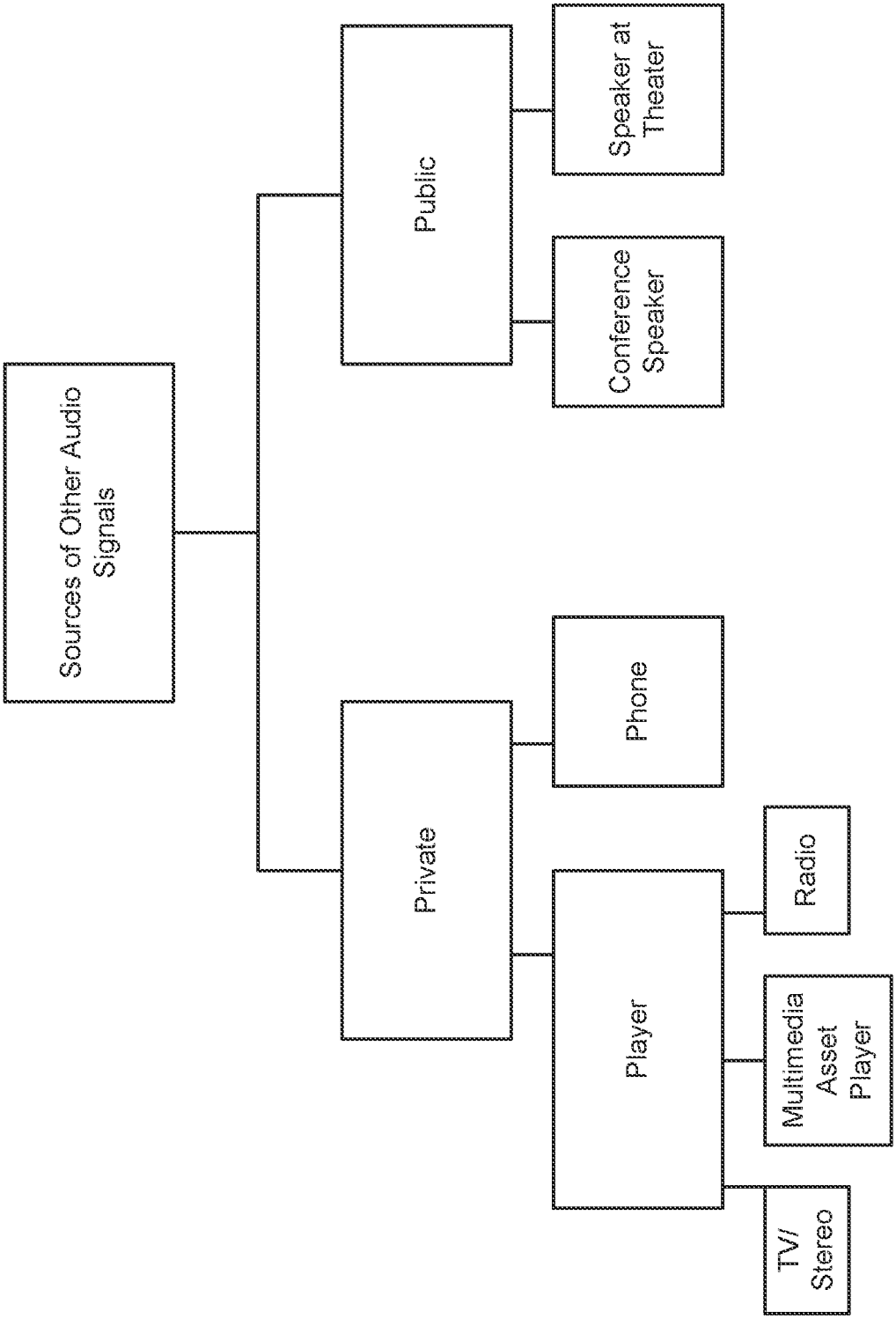
Sources of Other Audio Signals
Public
Private
Speaker at Theater
Conference Speaker
Phone
Player
Radio
Multimedia Asset Player
TV/ Stereo

FIG. 55

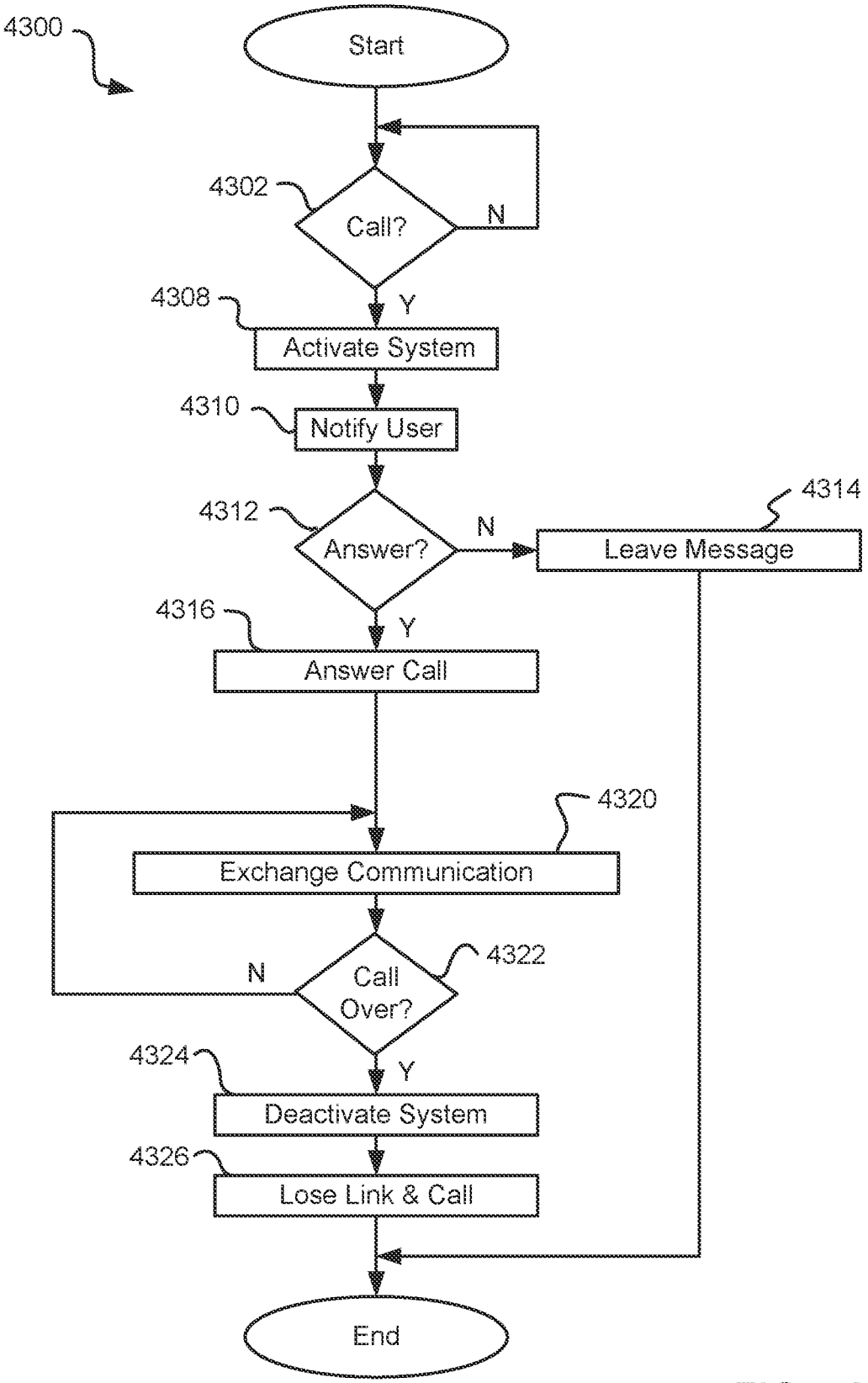
4300
Start
4302
Call?
N
Y
4308
Activate System
4310
Notify User
4312
Answer?
N
4314
Leave Message
4316
Y
Answer Call
4320
Exchange Communication
4322
Call Over?
N
Y
4324
Deactivate System
4326
Lose Link & Call
End

FIG. 56

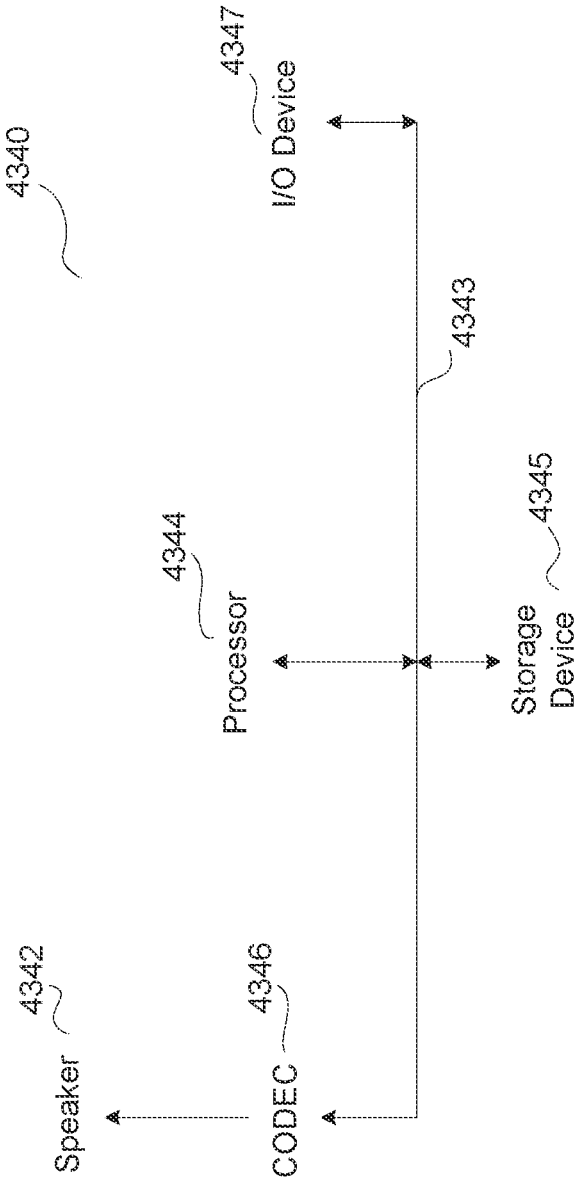
4340
4342
Speaker
4346
CODEC
4344
Processor
4347
I/O Device
4343
4345
Storage
Device

Fig. 57

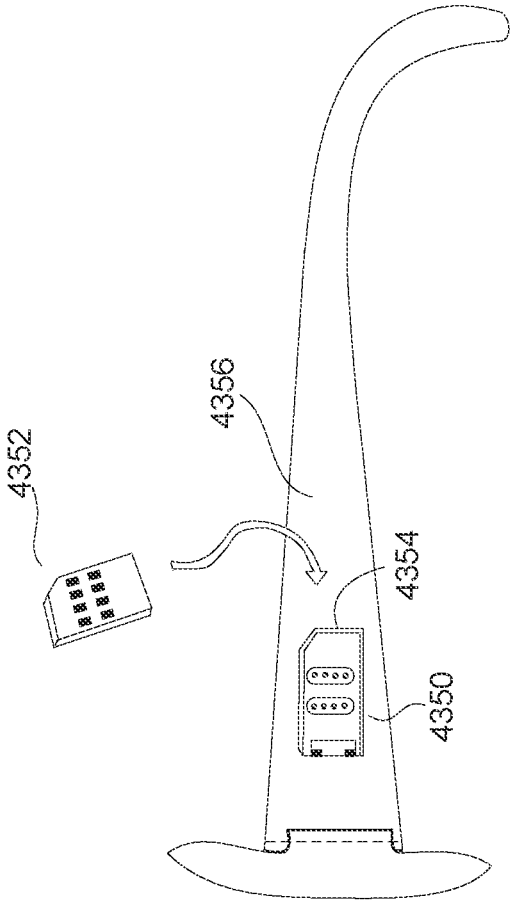

Fig. 58

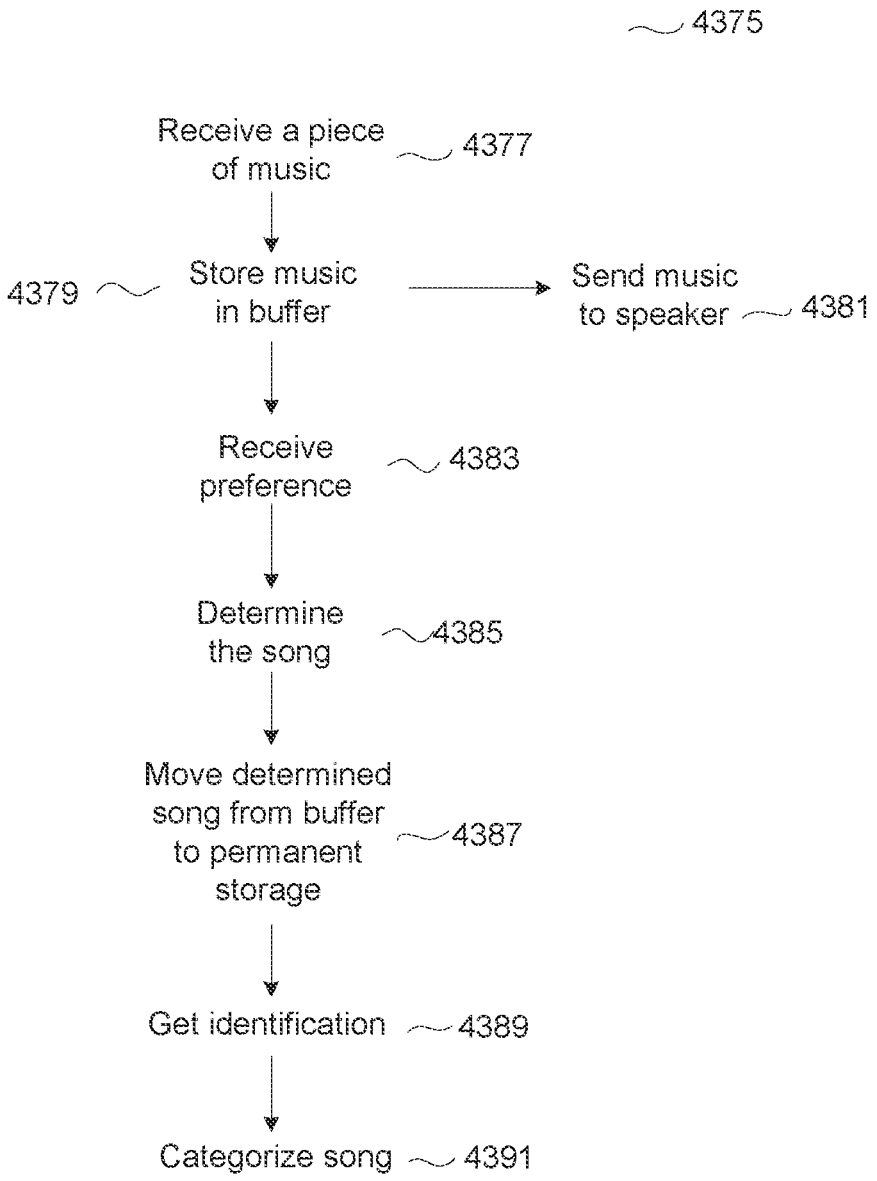
4375
Receive a piece of music
4377
4379
Store music in buffer
Send music to speaker
4381
Receive preference
4383
Determine the song
4385
Move determined song from buffer to permanent storage
4387
Get identification
4389
Categorize song
4391

Fig. 59

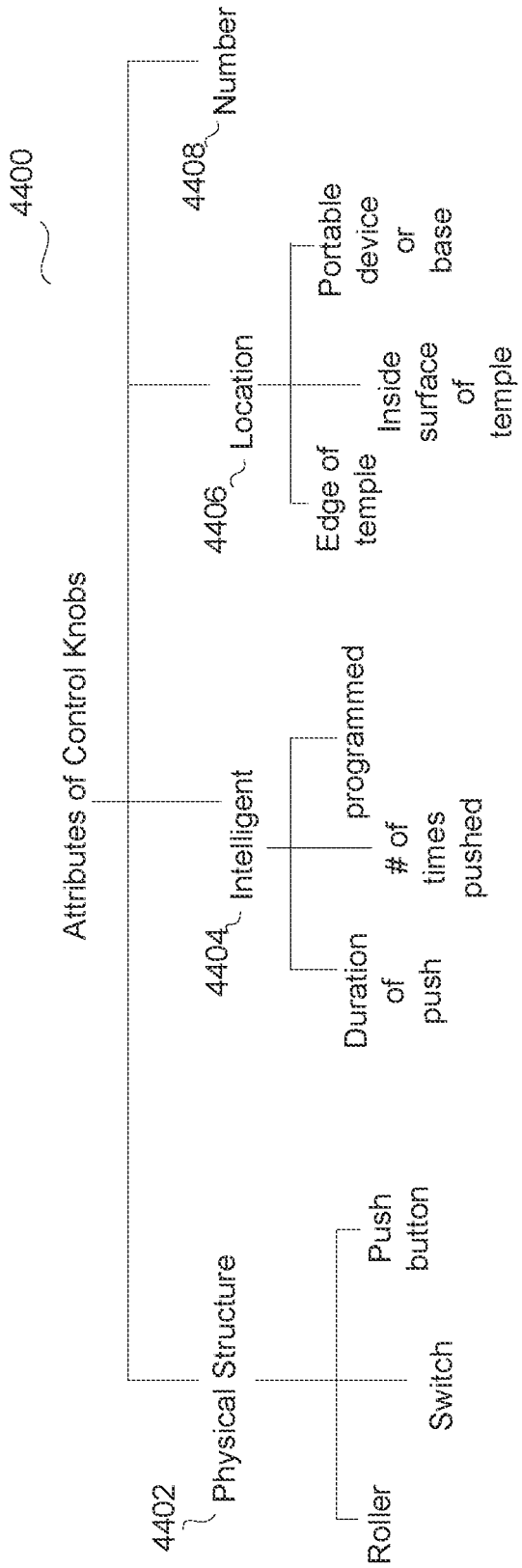
4400
Attributes of Control Knobs
4402
Physical Structure
Roller
Push button
Switch
4404
Intelligent
Duration of push
# of times pushed
programmed
4406
Location
Edge of temple
Inside surface of temple
Portable device or base
4408
Number

Fig. 60

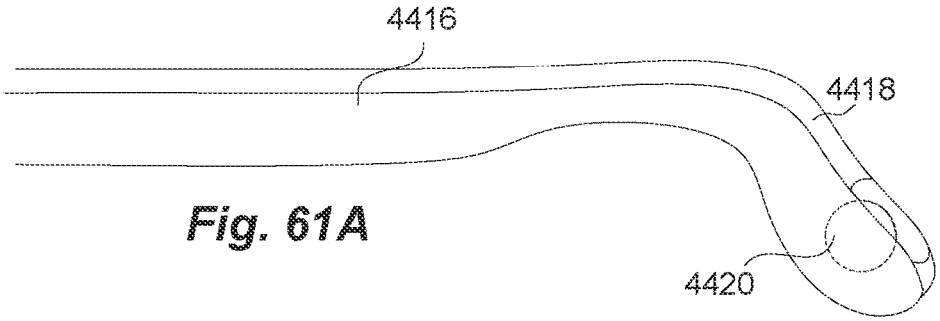

Fig. 61A

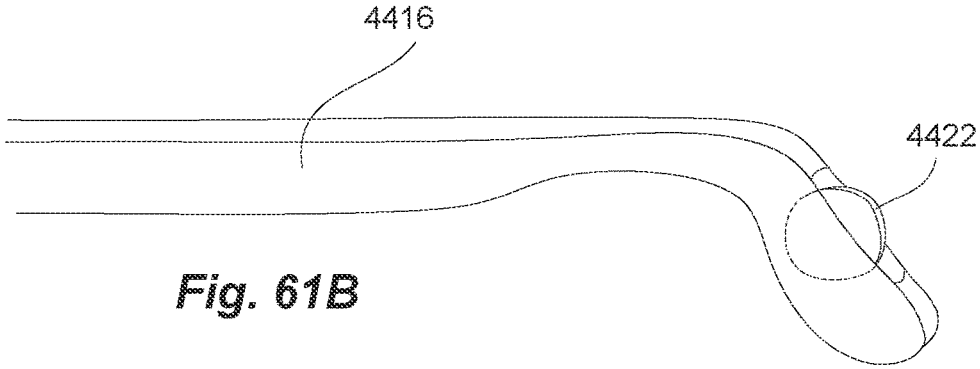

Fig. 61B

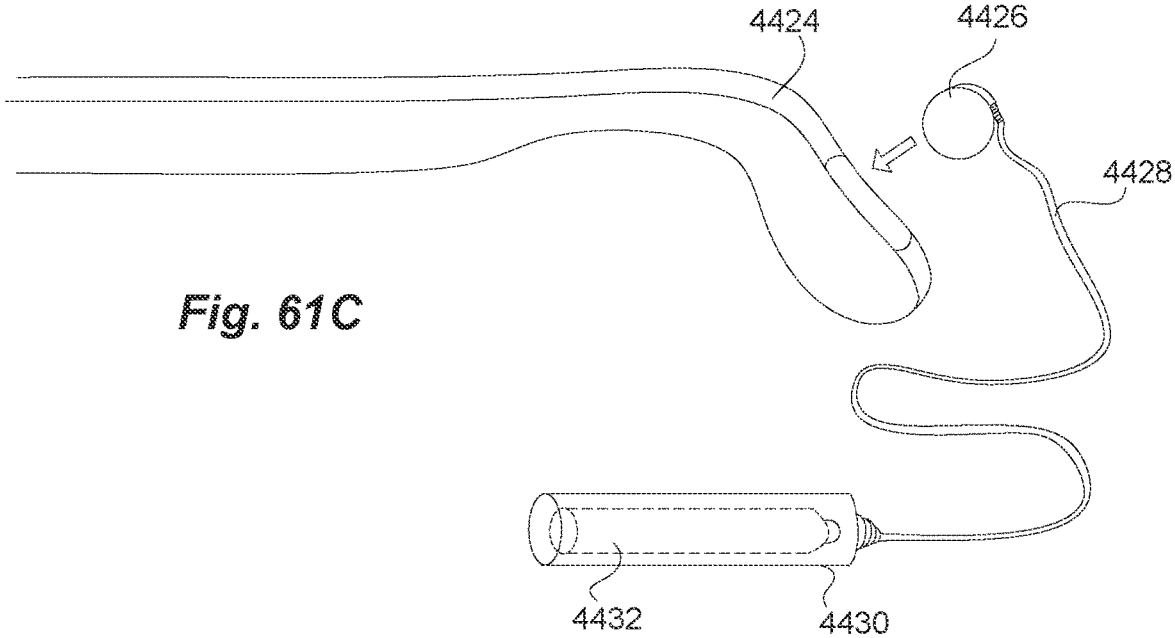

Fig. 61C

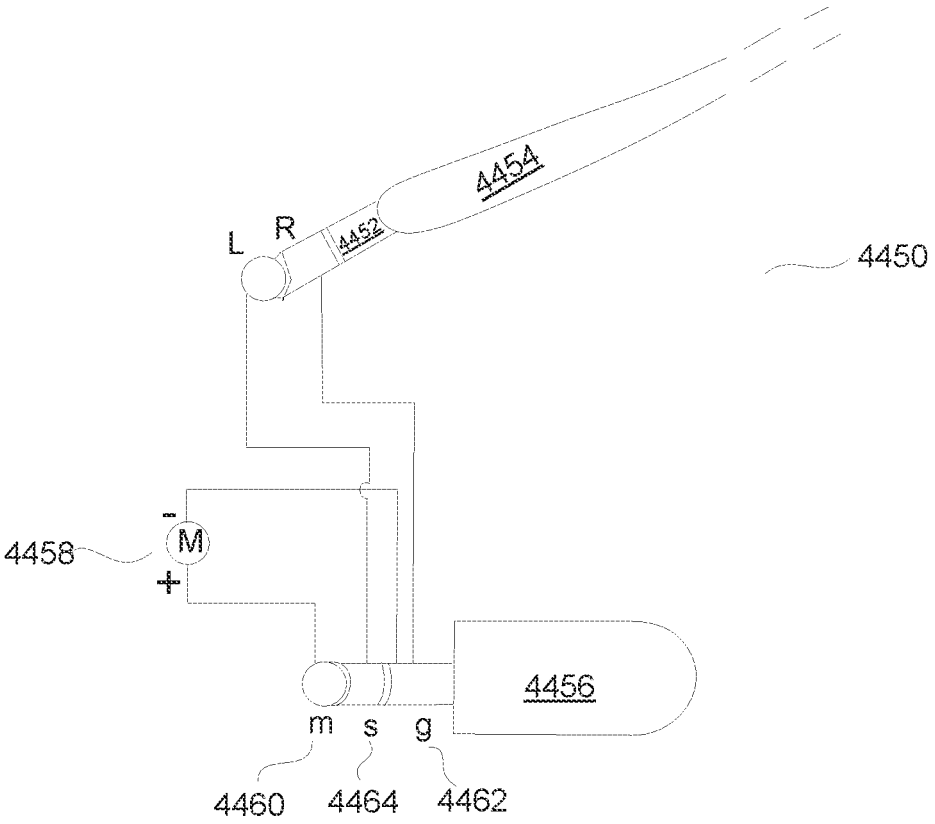

Fig. 62A

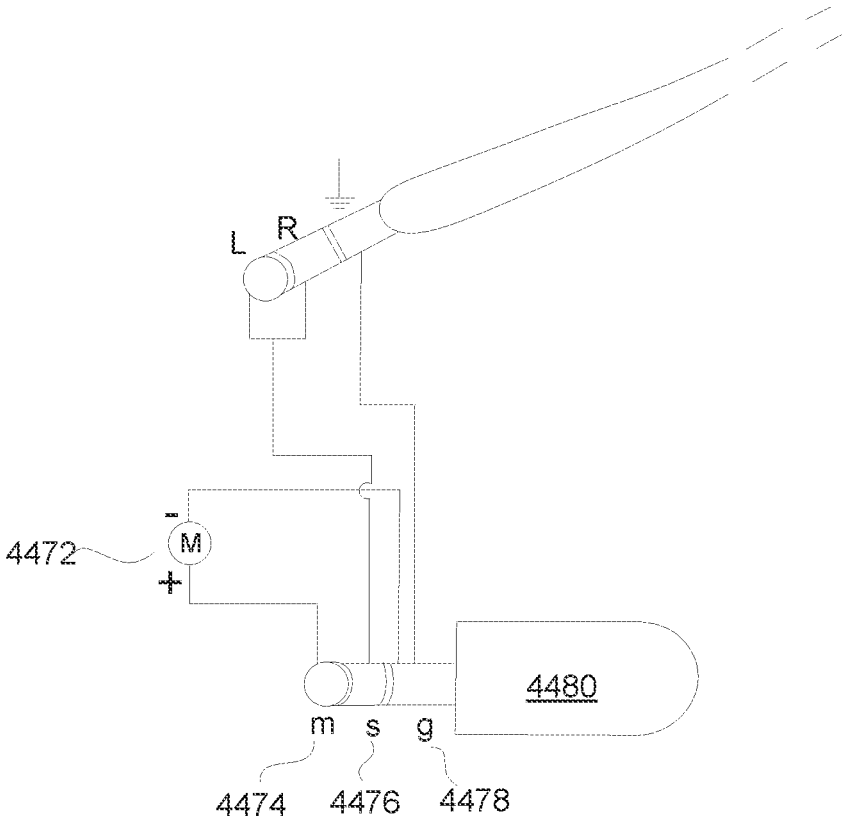

Fig. 62B

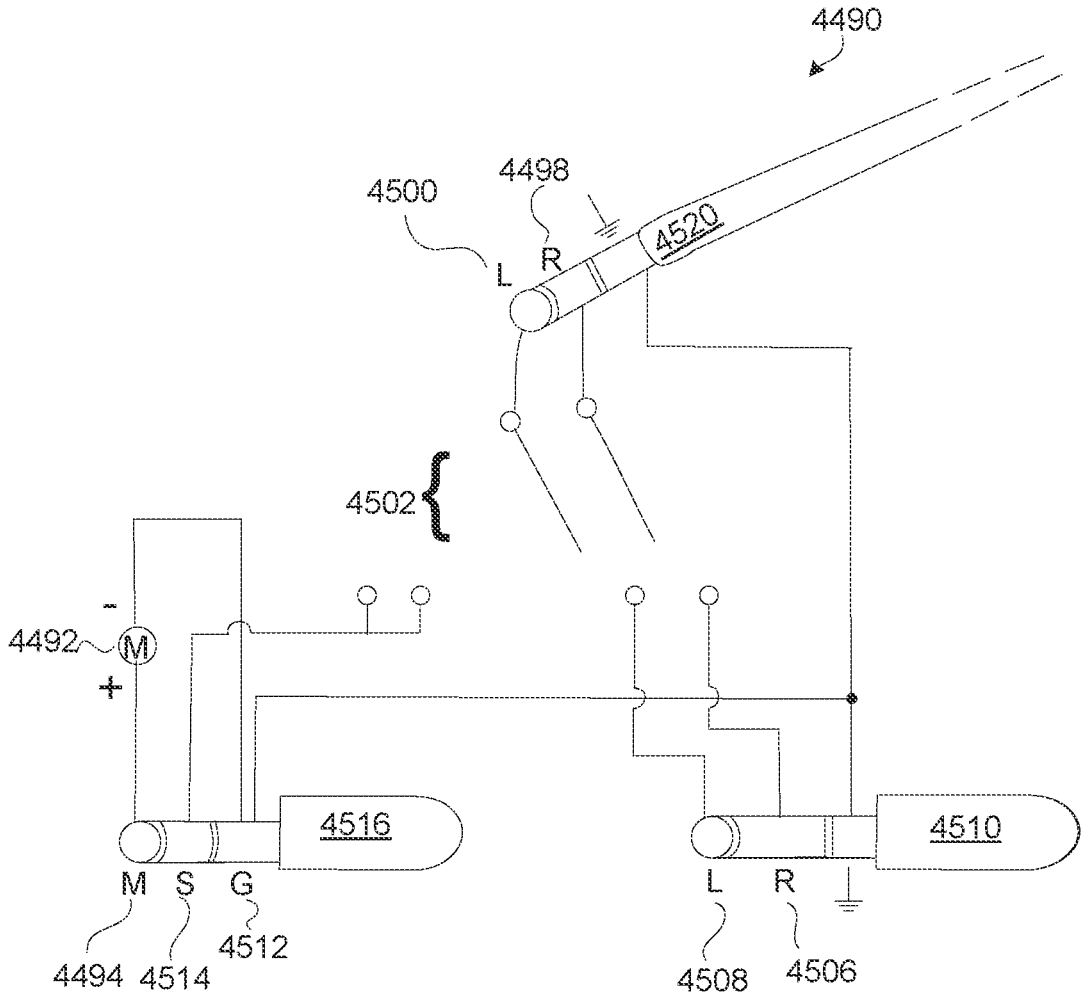
4490
4498
4500
L
R
4520
4502
4492
M
-
+
4516
4510
M
S
G
L
R
4494
4514
4512
4508
4506

Fig. 63

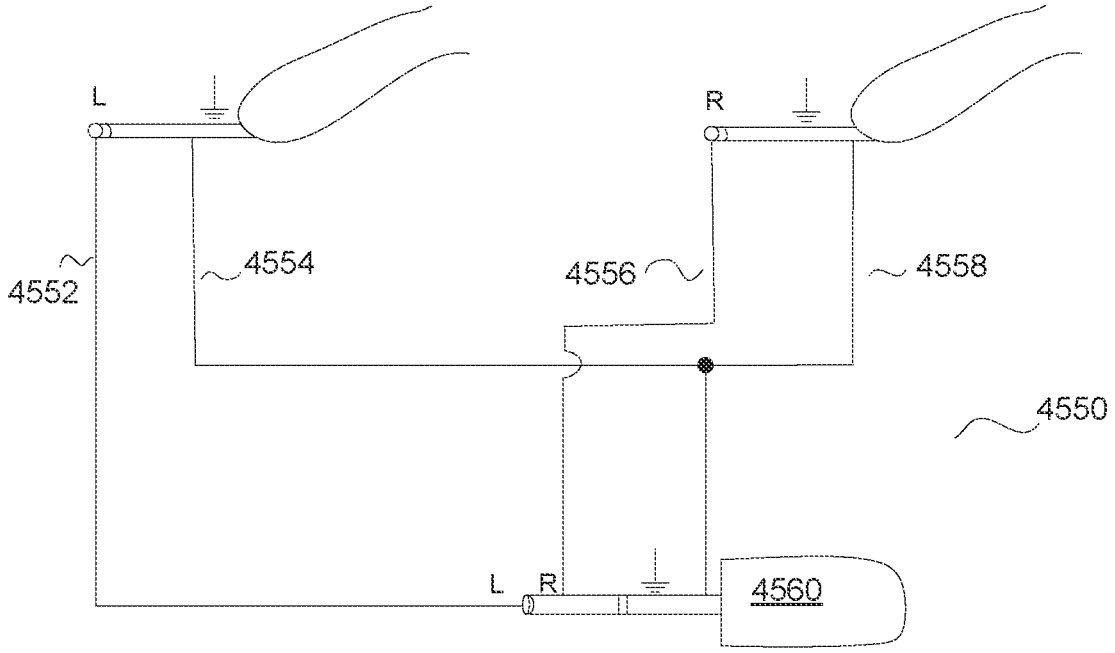

Fig. 64

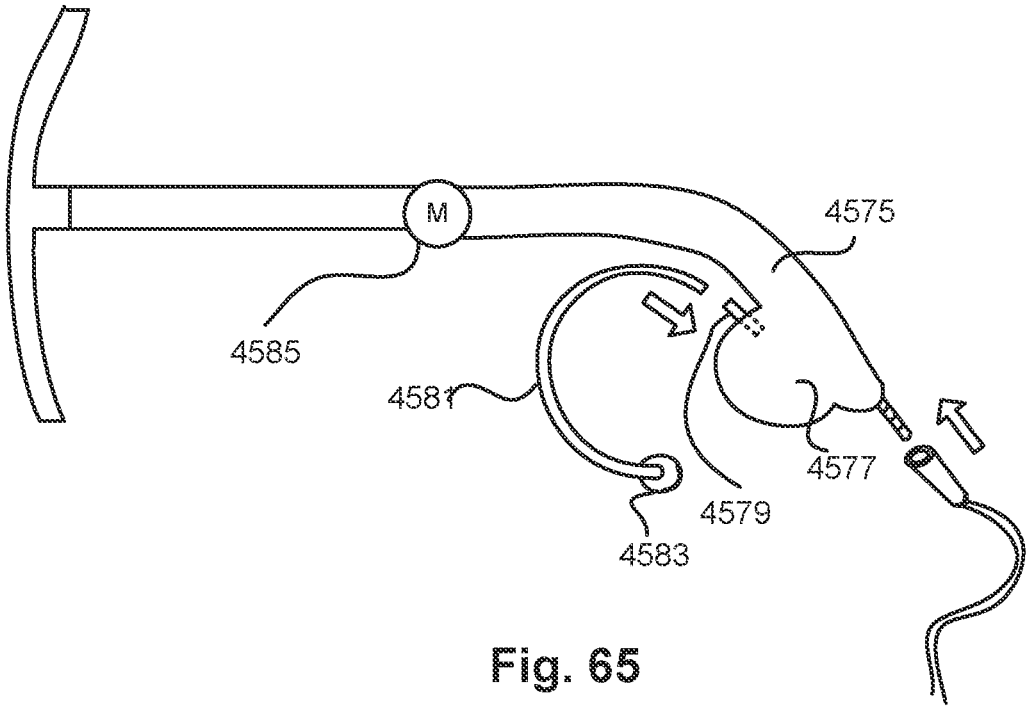
M
4575
4585
4581
4577
4579
4583

Fig. 65

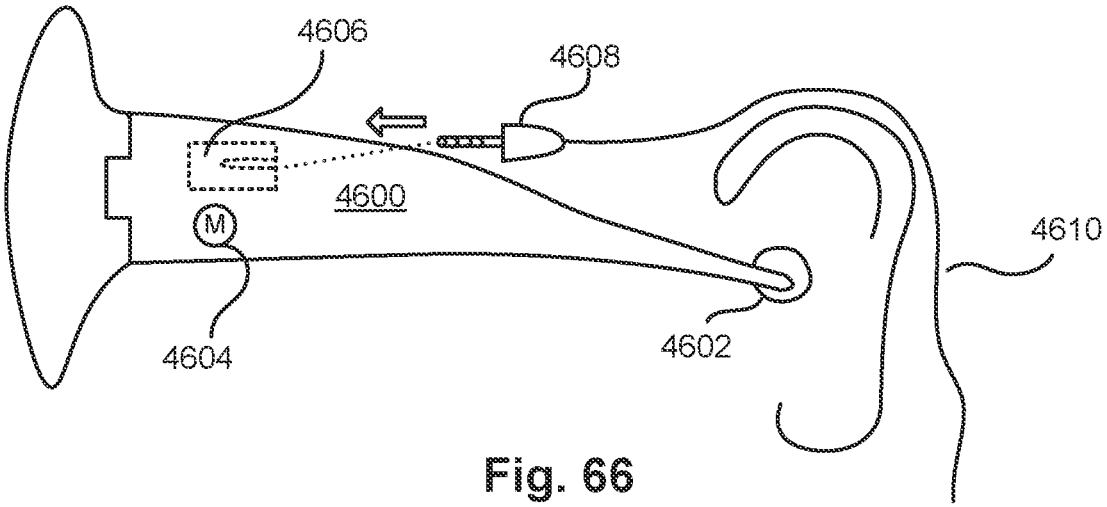
4606
4608
4600
M
4610
4604
4602

Fig. 66

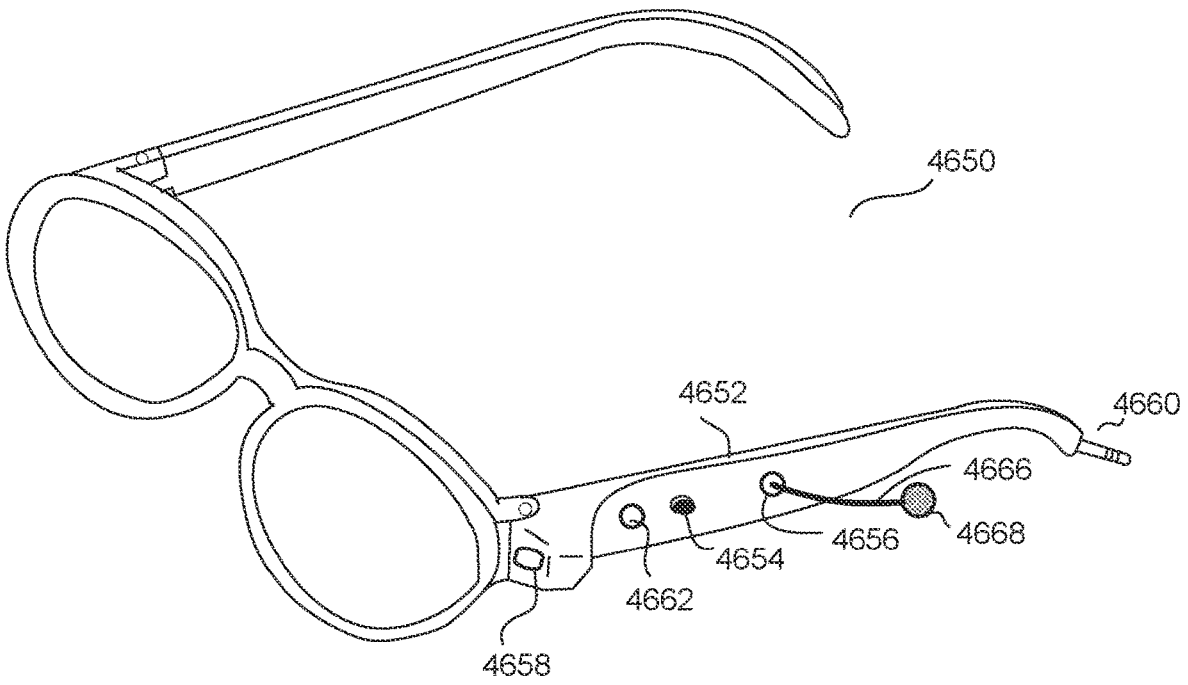

Fig. 67

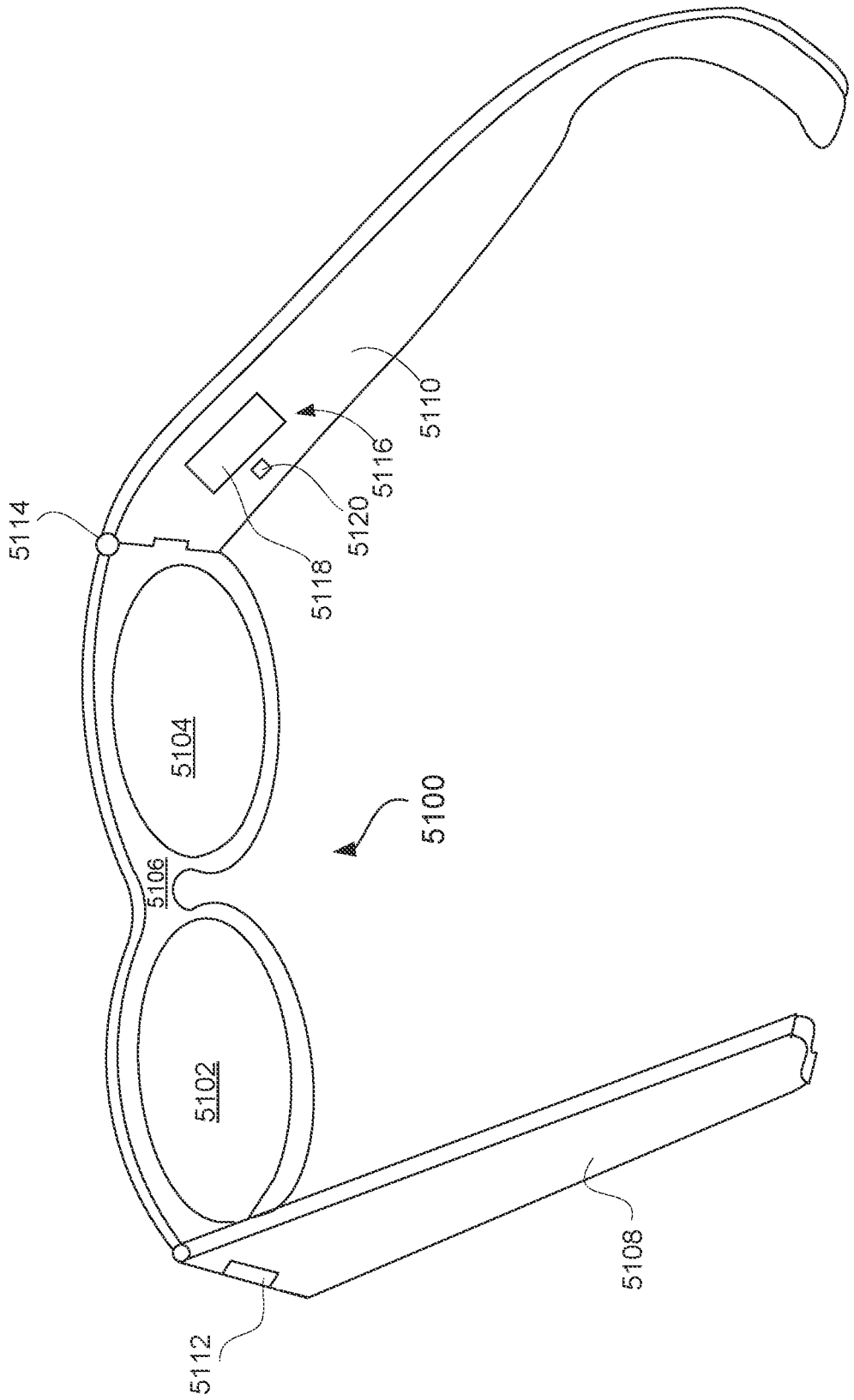

FIG. 68

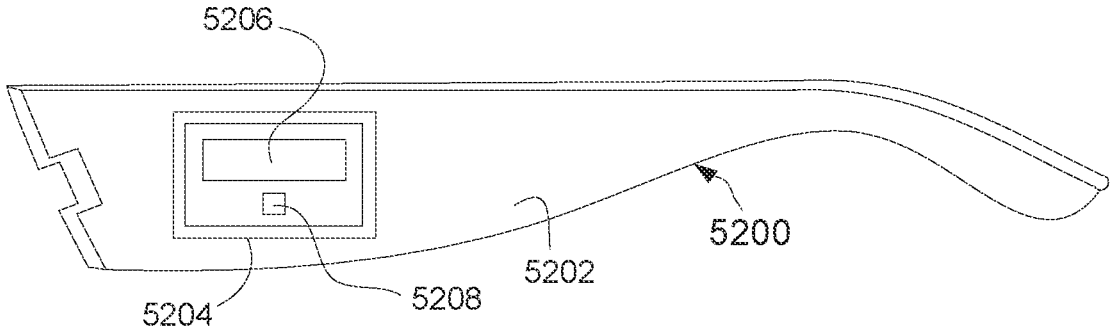

FIG. 69

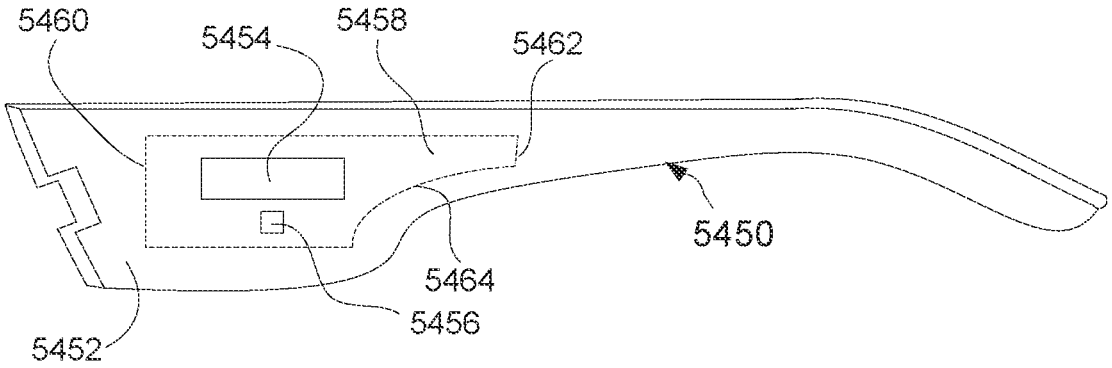

FIG. 71D

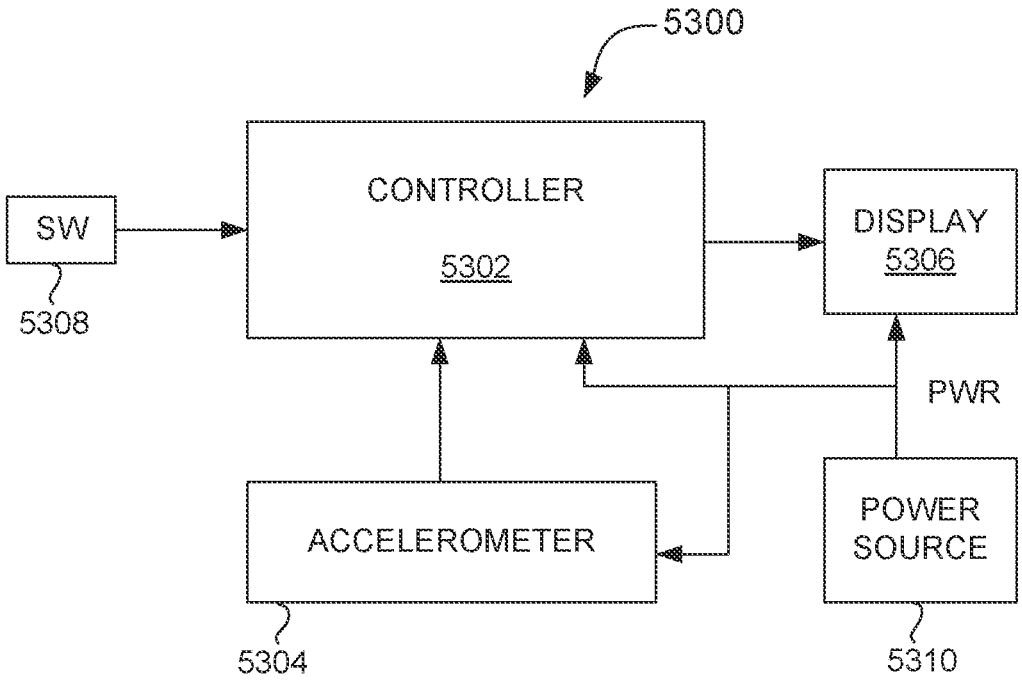
5300
CONTROLLER
5302
SW
5308
DISPLAY
5306
PWR
ACCELEROMETER
5304
POWER
SOURCE
5310

FIG. 70

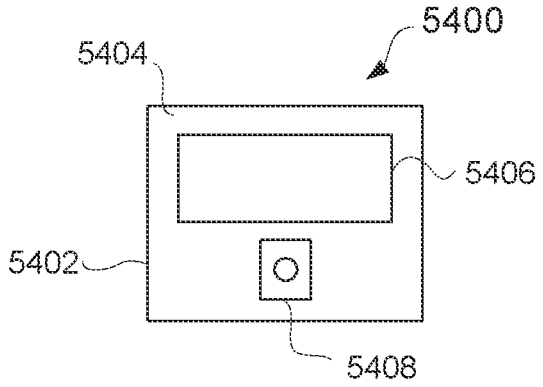

FIG. 71A

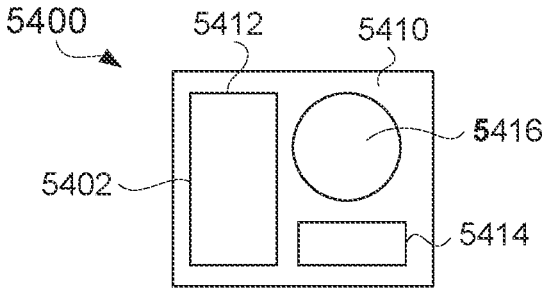

FIG. 71B

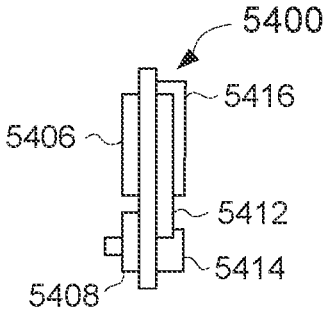

FIG. 71C

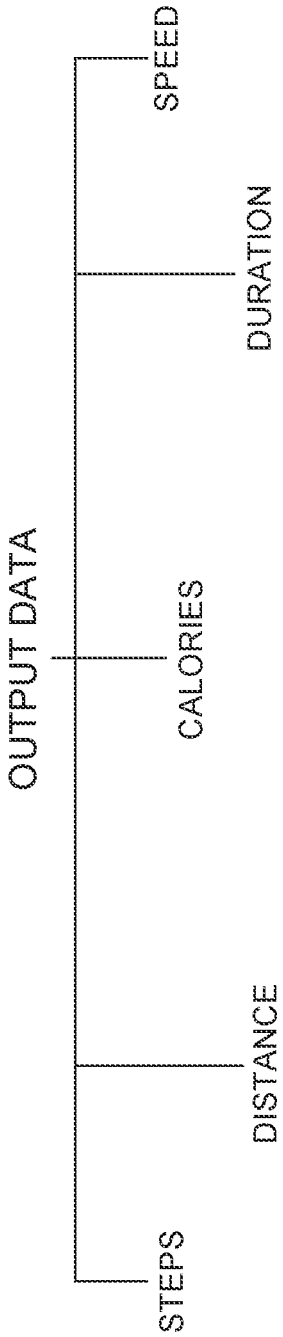

FIG. 72A

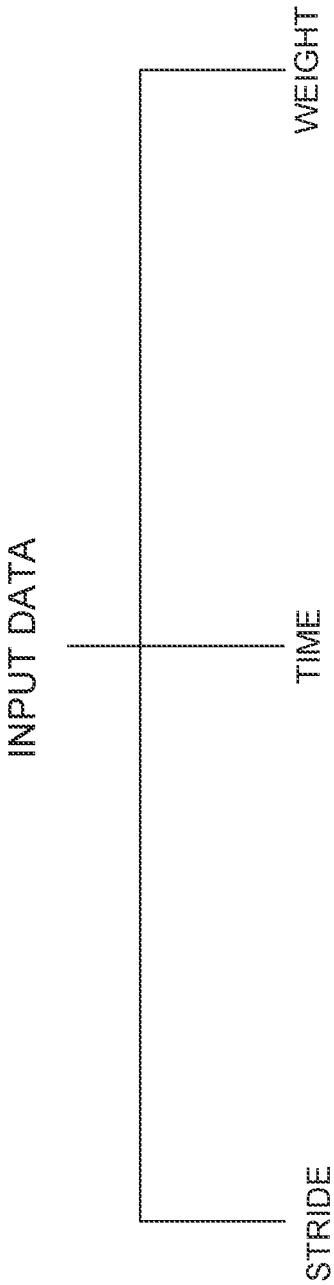

FIG. 72B

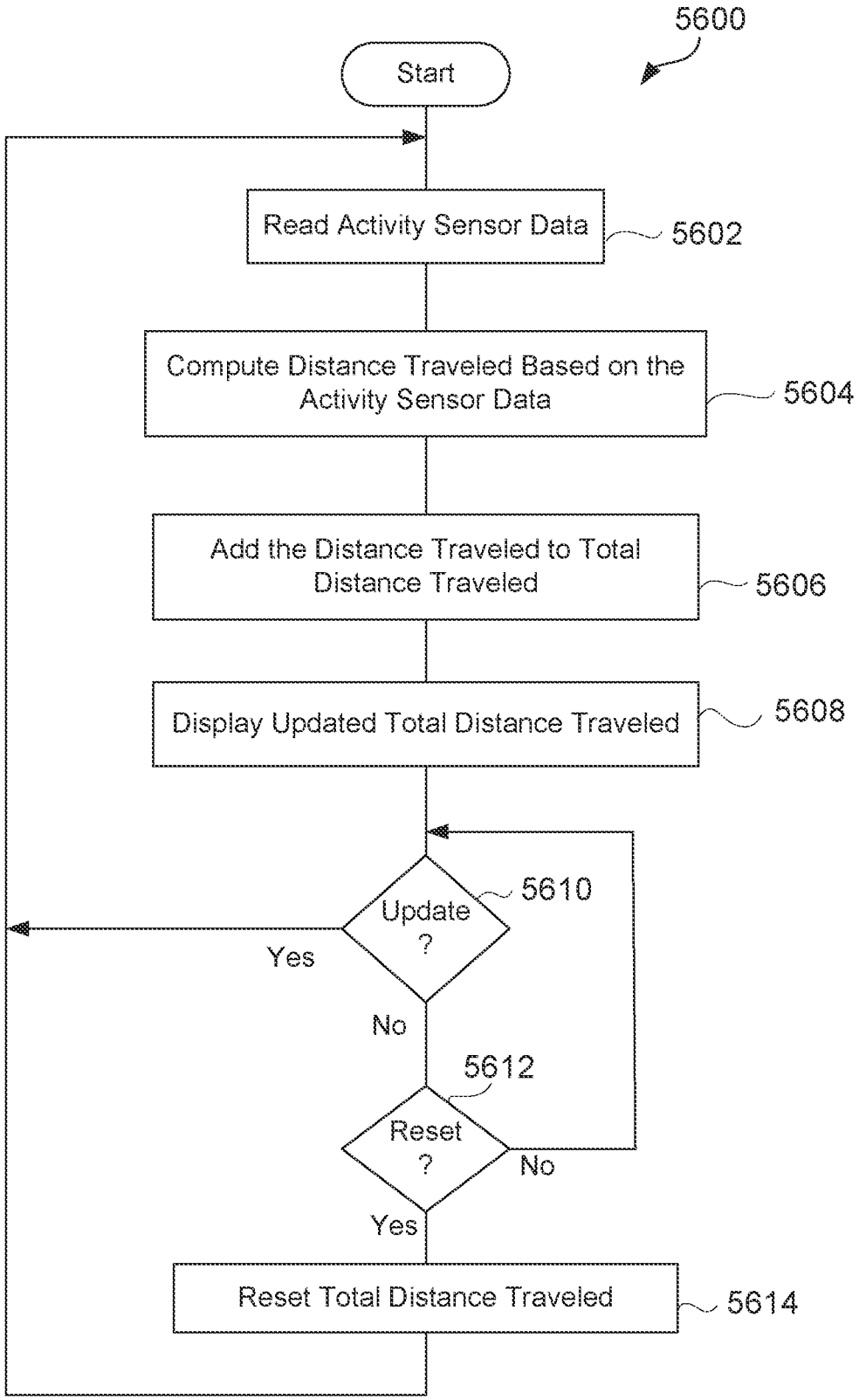
5600
Start
Read Activity Sensor Data
5602
Compute Distance Traveled Based on the Activity Sensor Data
5604
Add the Distance Traveled to Total Distance Traveled
5606
Display Updated Total Distance Traveled
5608
Update ?
5610
Yes
No
5612
Reset ?
No
Yes
Reset Total Distance Traveled
5614

FIG. 73

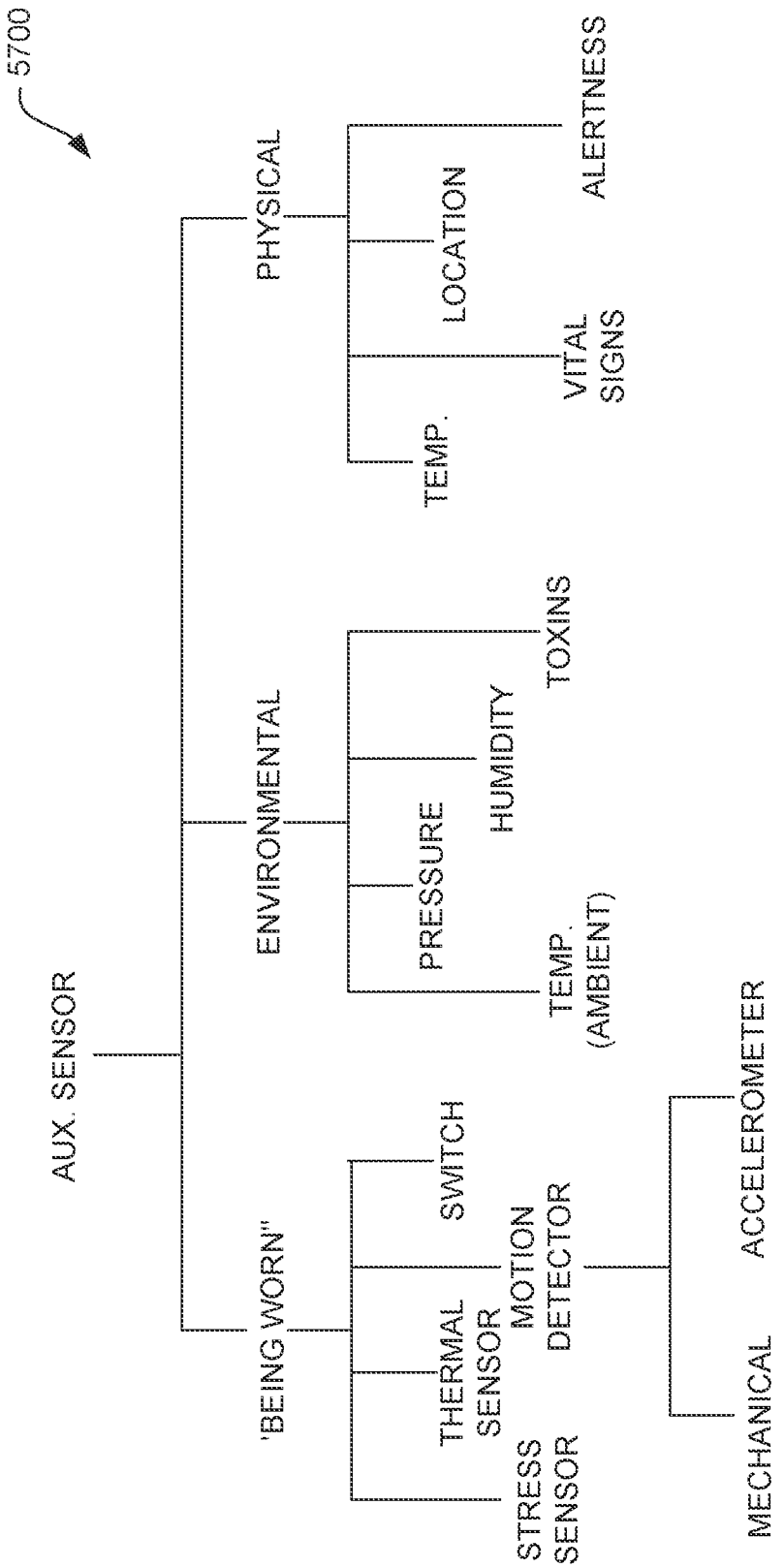
5700
AUX. SENSOR
PHYSICAL
ENVIRONMENTAL
'BEING WORN"
TEMP.
LOCATION
VITAL SIGNS
ALERTNESS
PRESSURE
HUMIDITY
TOXINS
TEMP. (AMBIENT)
THERMAL SENSOR
SWITCH
MOTION DETECTOR
STRESS SENSOR
MECHANICAL
ACCELEROMETER

FIG. 74

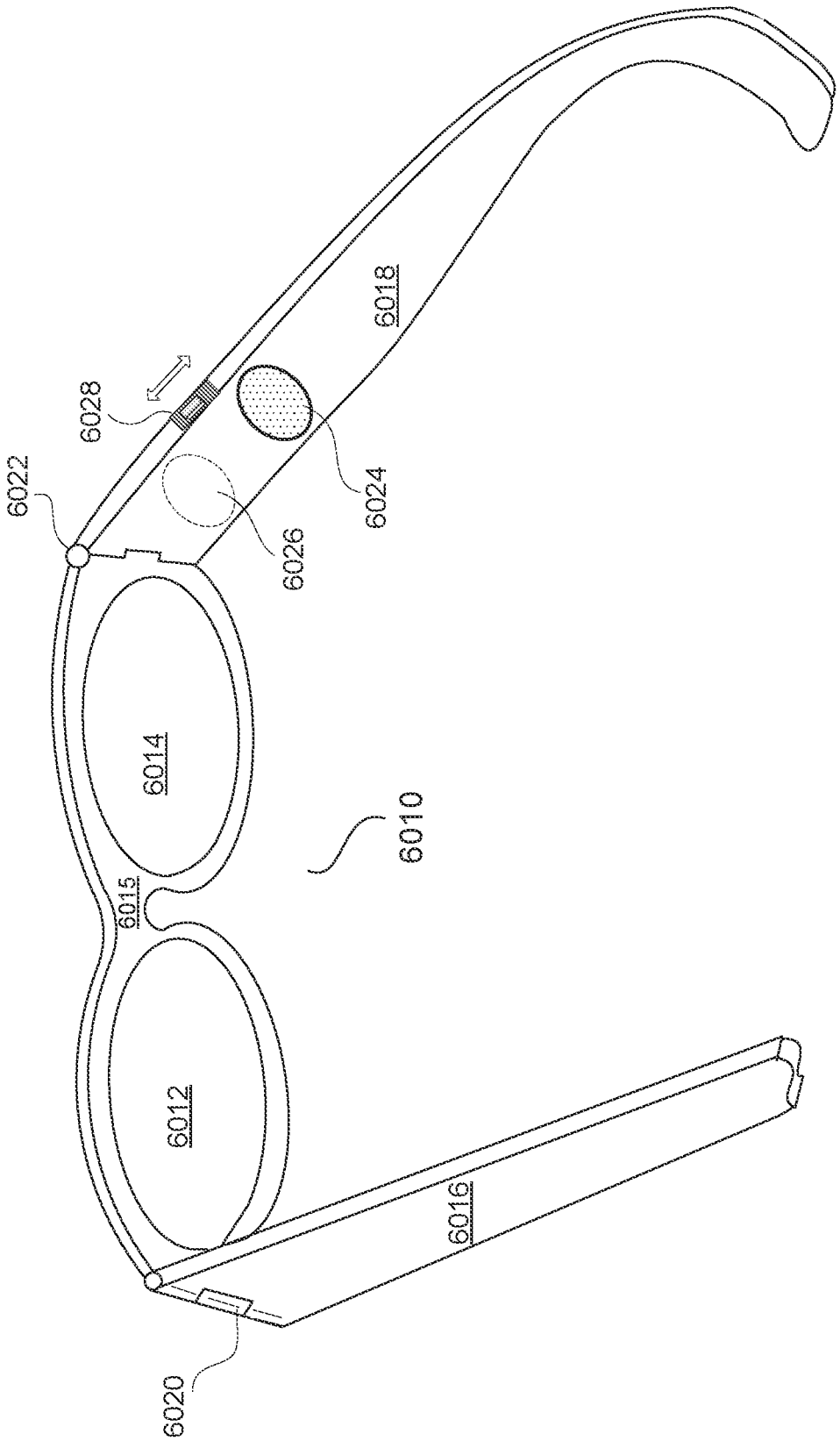

FIG. 75

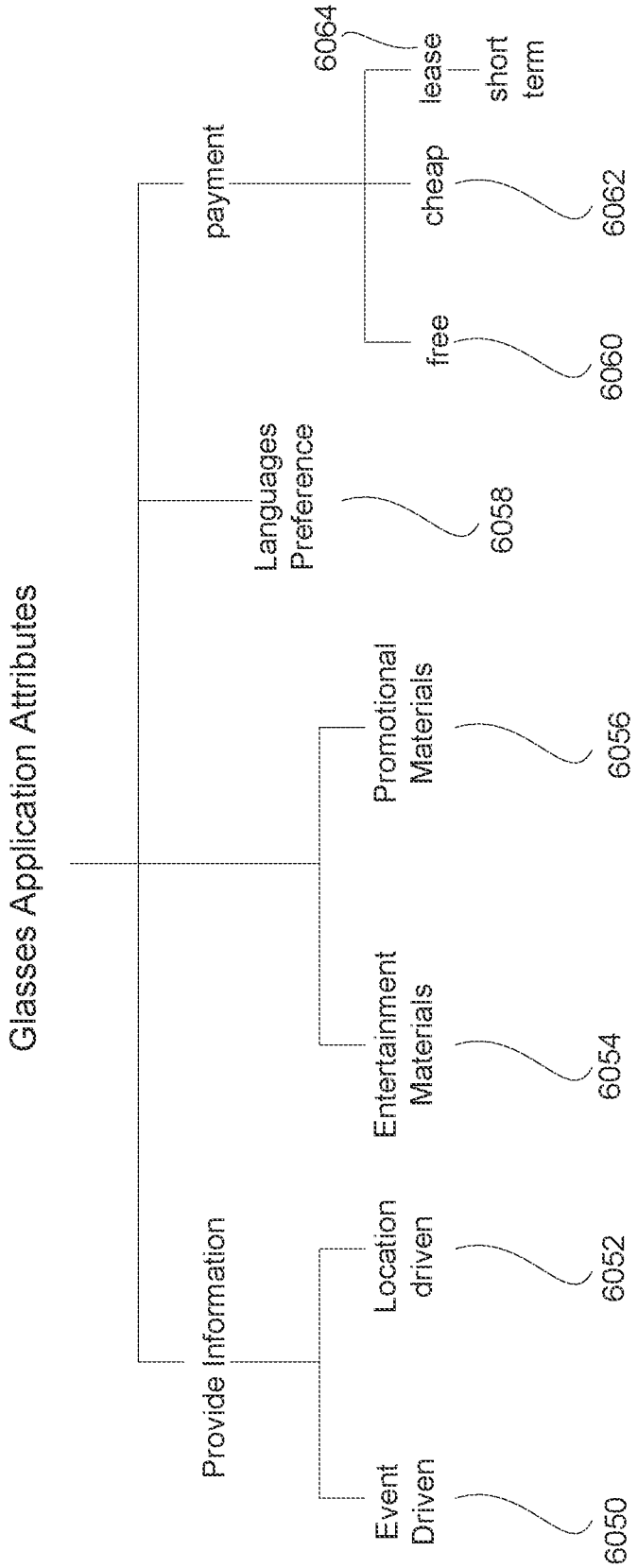
Glasses Application Attributes
Provide Information
Event Driven
6050
Location driven
6052
Entertainment Materials
6054
Promotional Materials
6056
Languages Preference
6058
payment
free
6060
cheap
6062
lease
6064
short term

FIG. 76

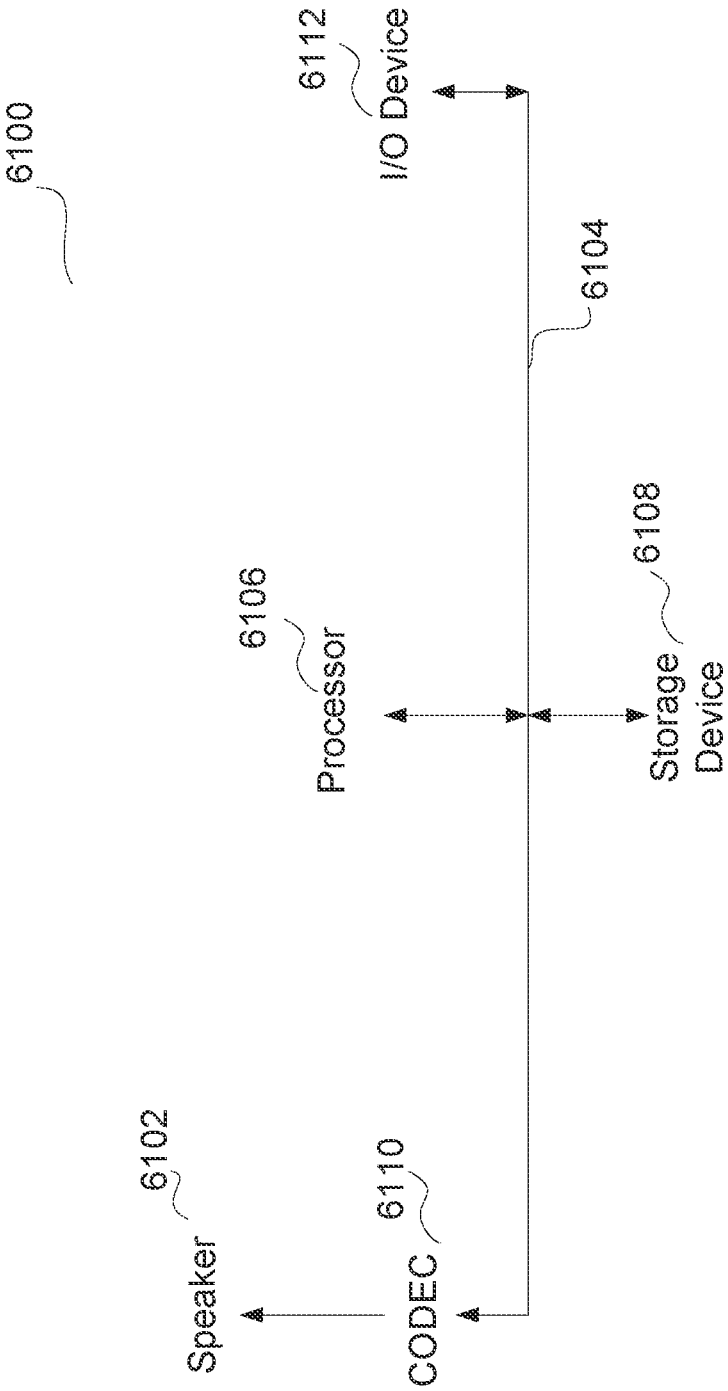
6100
6102
Speaker
6110
CODEC
6106
Processor
6112
I/O Device
6104
6108
Storage Device

FIG. 77

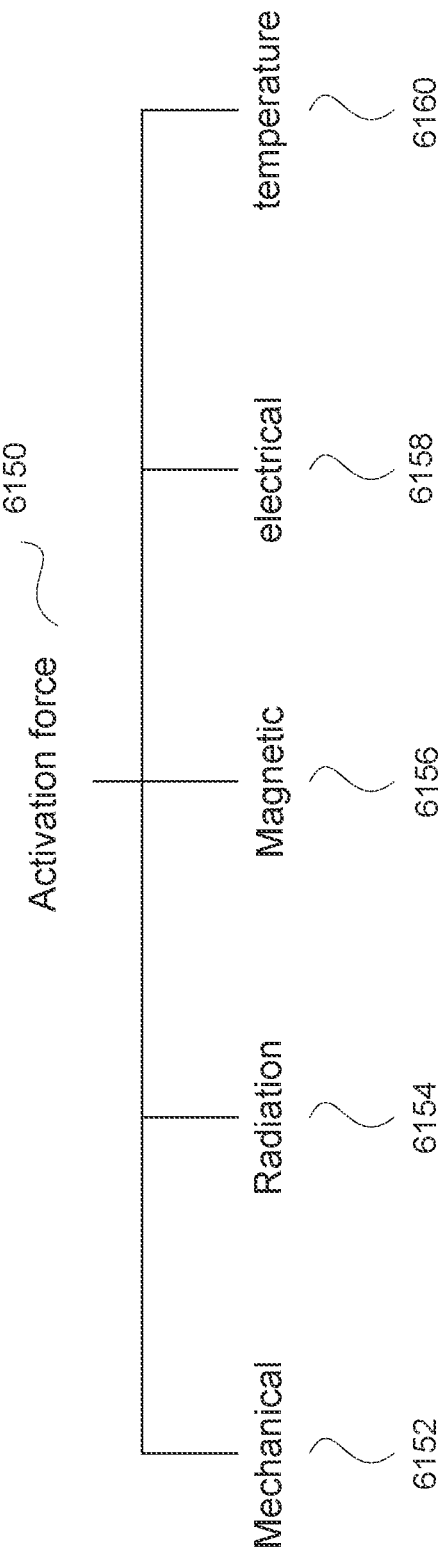
Activation force
6150
Mechanical
6152
Radiation
6154
Magnetic
6156
electrical
6158
temperature
6160

Fig. 78

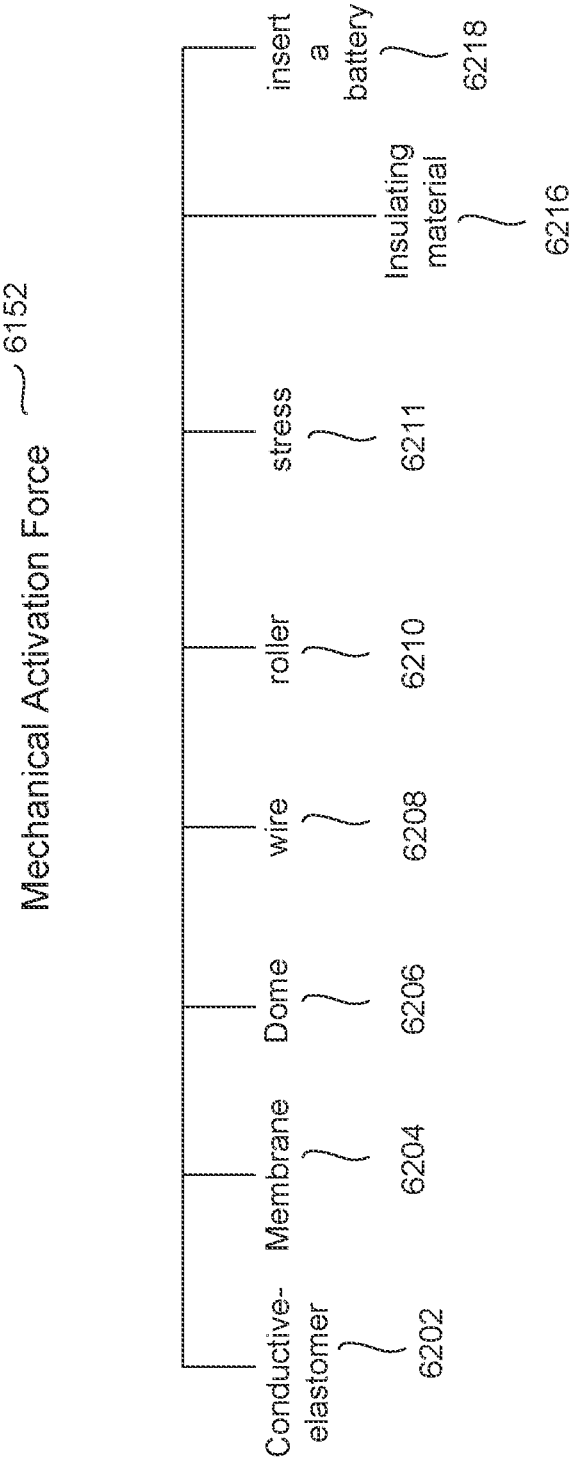
Mechanical Activation Force
6152
Conductive-elastomer
6202
Membrane
6204
Dome
6206
wire
6208
roller
6210
stress
6211
Insulating material
6216
insert a battery
6218

Fig. 79

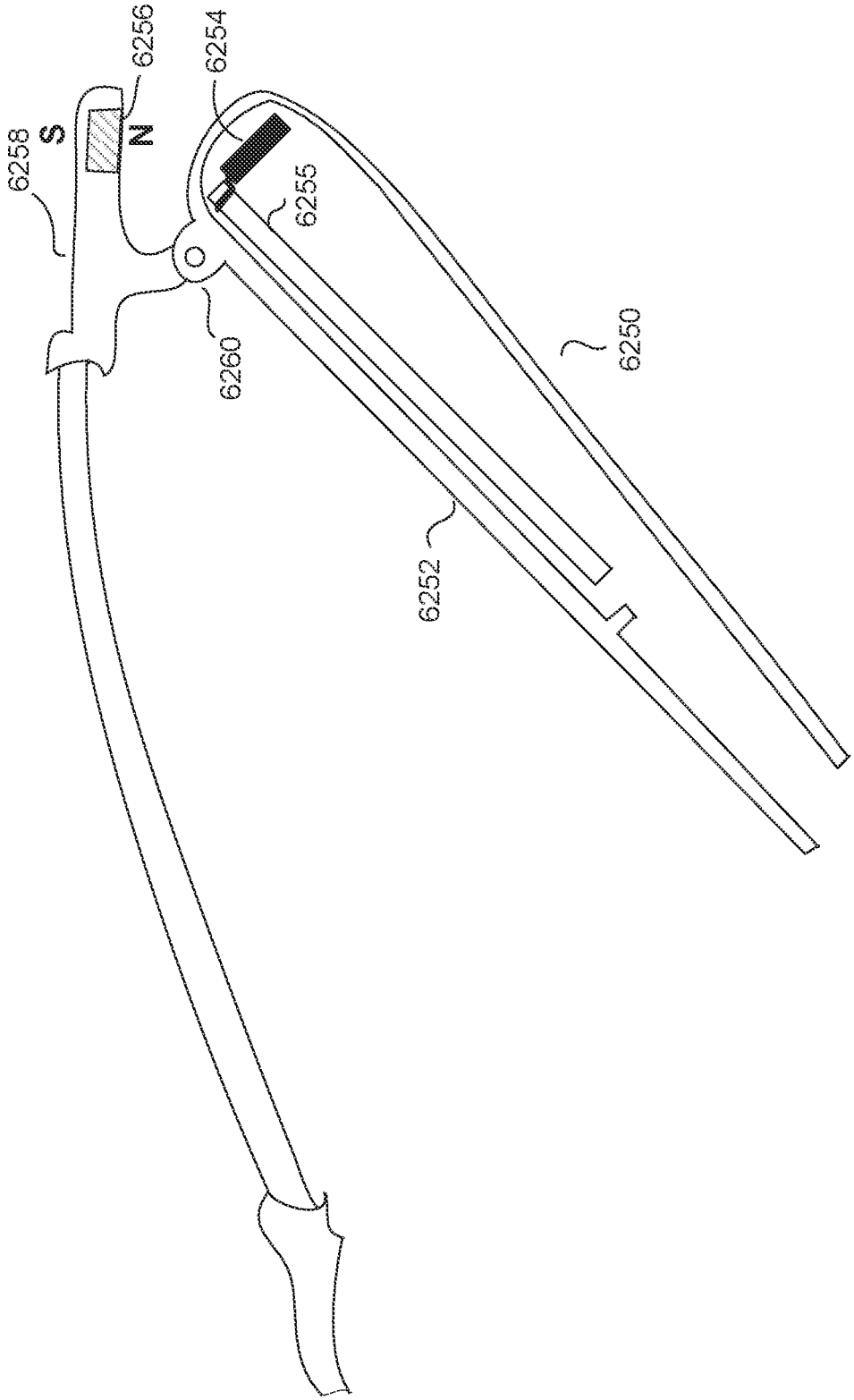

Fig. 80

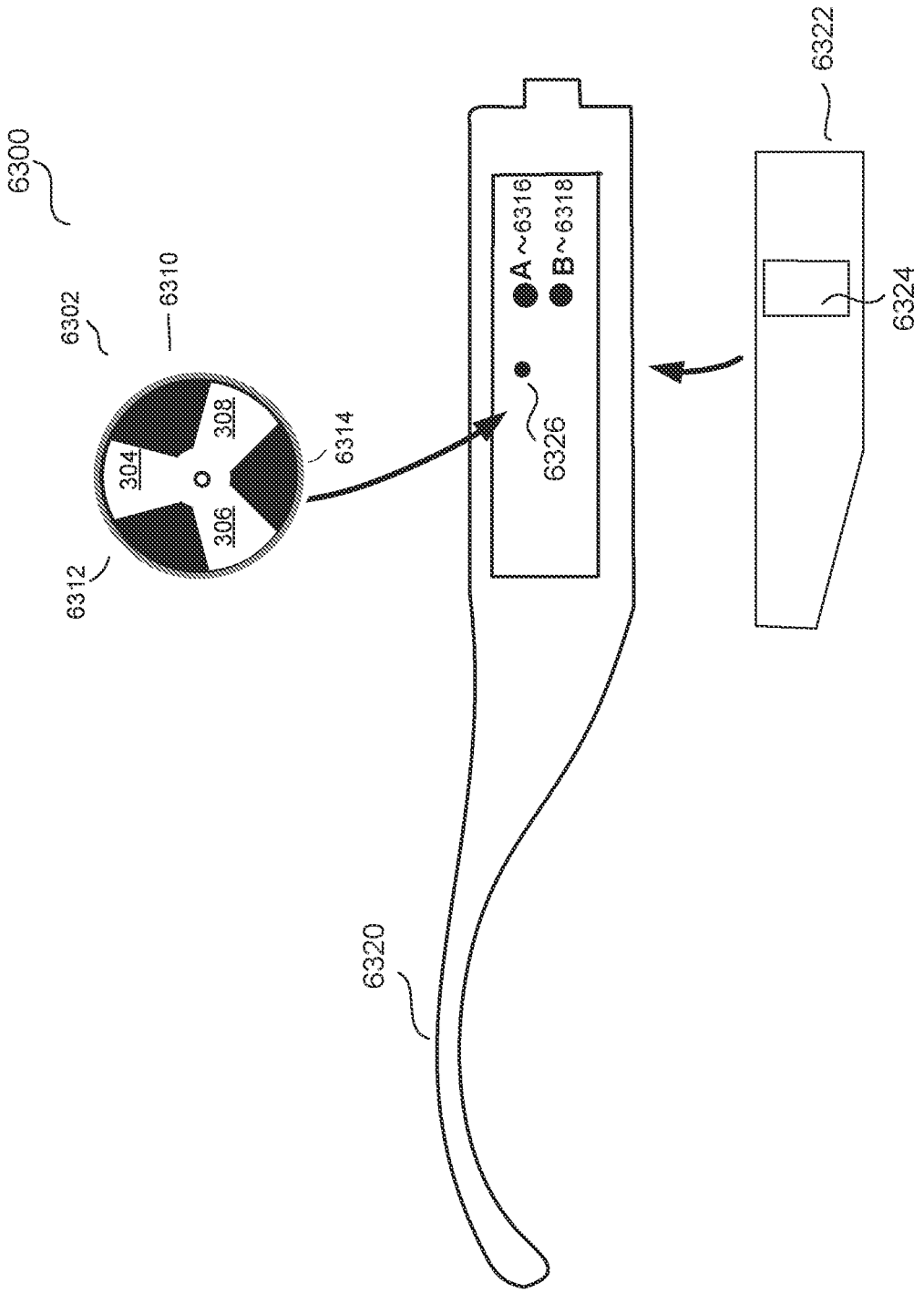
6300
6302
6310
6312
304
306
308
6314
6320
6326
A ~6316
B ~6318
6322
6324

Fig. 81A

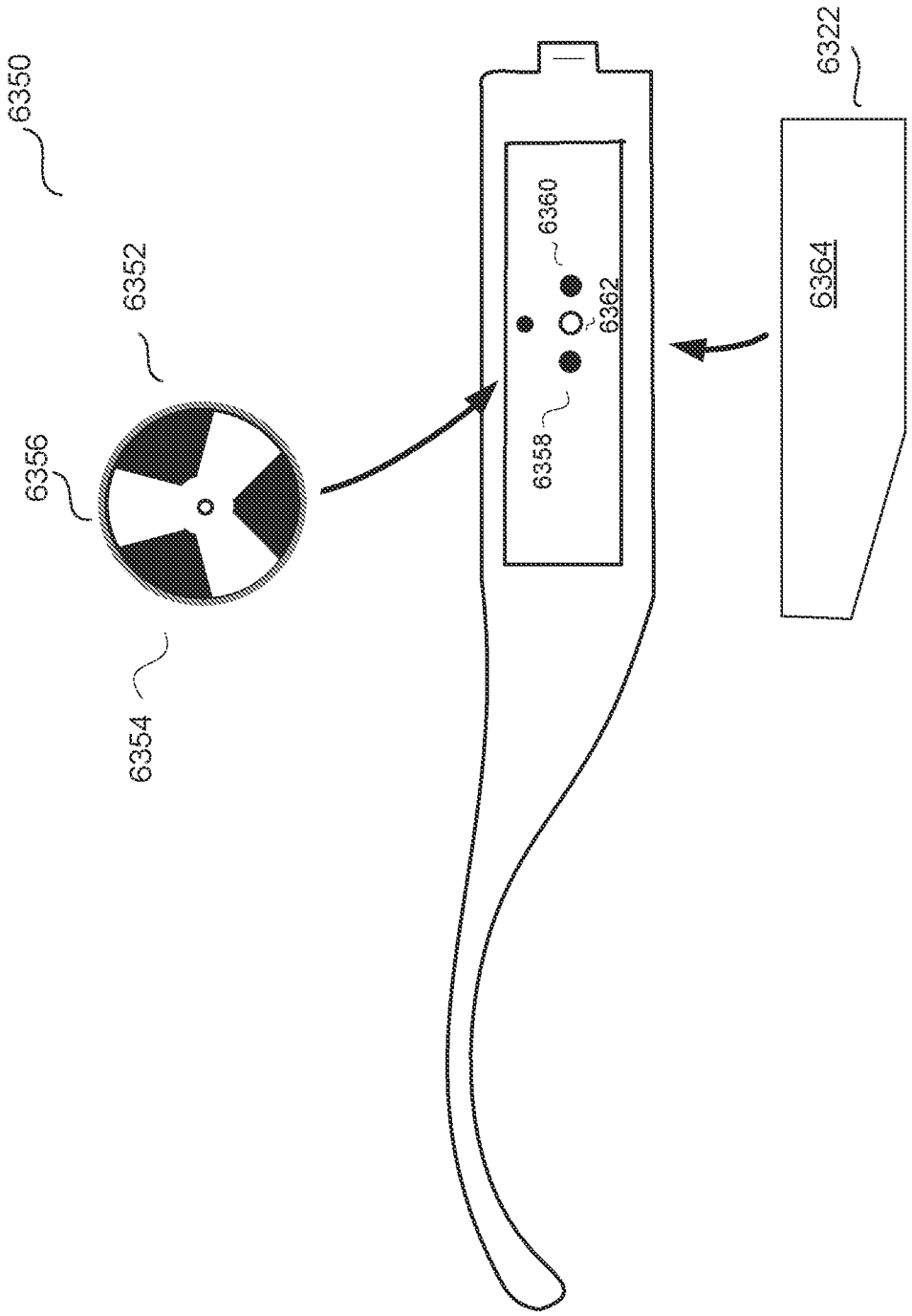

Fig. 81B

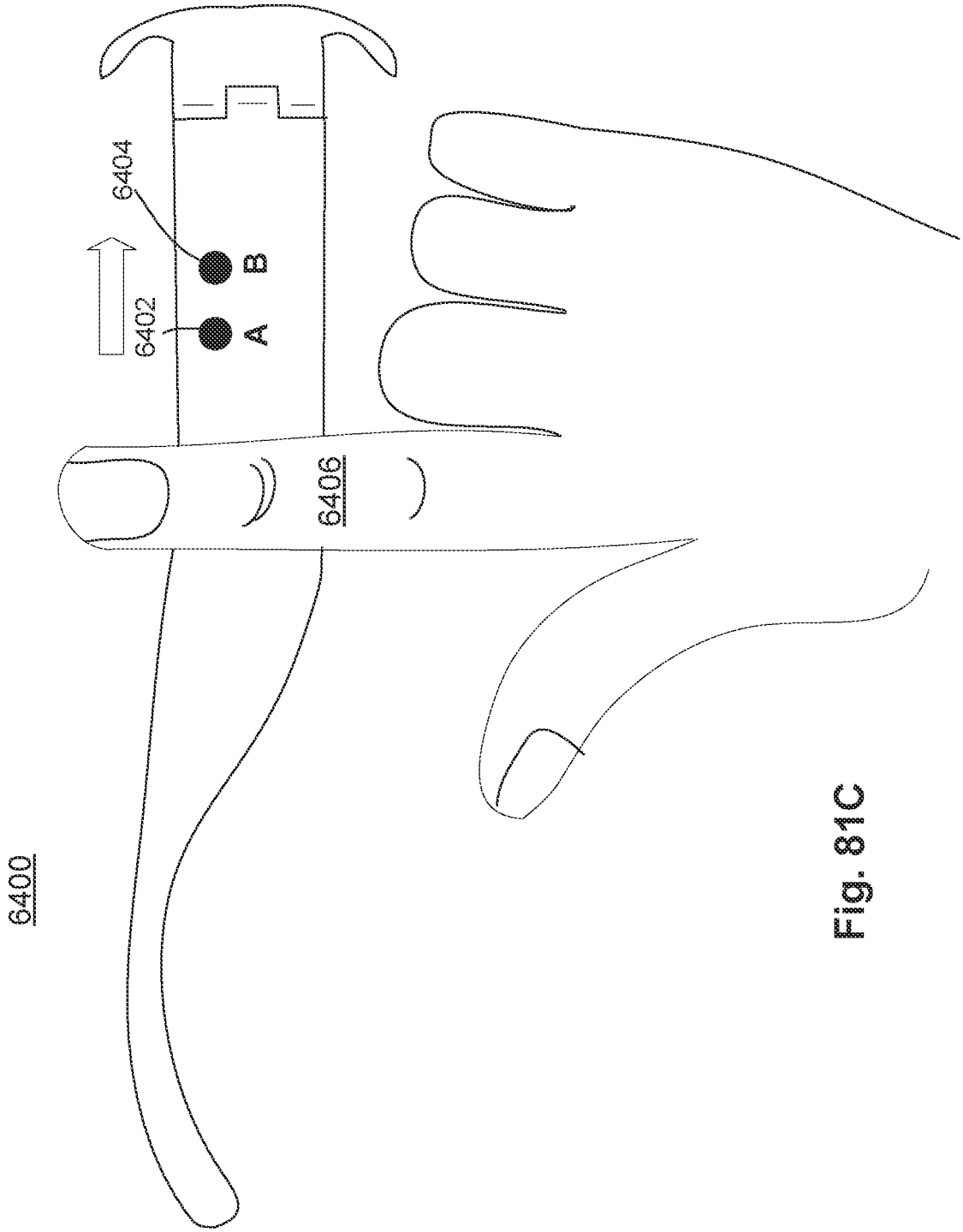

Fig. 81C

WEARABLE AUDIO SYSTEM SUPPORTING ENHANCED HEARING SUPPORT

CROSS-REFERENCE TO RELATED APPLICATIONS

This application is a continuation of U.S. patent application Ser. No. 17/484,080, filed Sep. 24, 2021, and entitled "EYEWEAR SUPPORTING EMBEDDED ELECTRONIC COMPONENTS FOR AUDIO SUPPORT," which is hereby incorporated herein by reference, which in turn is a continuation of U.S. patent application Ser. No. 16/574,254, filed Sep. 18, 2019, and entitled "EYEWEAR SUPPORTING EMBEDDED AND TETHERED ELECTRONIC COMPONENTS," now U.S. Pat. No. 11,204,512 which is hereby incorporated herein by reference, which in turn is a continuation of U.S. patent application Ser. No. 16/049,120, filed Jul. 30, 2018, and entitled "EYEWEAR SUPPORTING EMBEDDED ELECTRONIC COMPONENTS," which is hereby incorporated herein by reference, which in turn is a continuation of U.S. patent application Ser. No. 15/375,423, filed Dec. 12, 2016, and entitled "EYEWEAR SUPPORTING EMBEDDED ELECTRONIC COMPONENTS," now U.S. Pat. No. 10,061,144, which is hereby incorporated herein by reference, which in turn is a continuation of U.S. patent application Ser. No. 14/557,409, filed Dec. 1, 2014, and entitled "EYEWEAR SUPPORTING EMBEDDED ELECTRONIC COMPONENTS," now U.S. Pat. No. 9,547,184, which is hereby incorporated herein by reference, which in turn is a continuation of U.S. patent application Ser. No. 13/955,336, filed Jul. 31, 2013, and entitled "EYEWEAR SUPPORTING BONE CONDUCTING SPEAKER," now U.S. Pat. No. 8,905,542, which is hereby incorporated herein by reference, which in turn is a continuation of U.S. patent application Ser. No. 13/085,402, filed Apr. 12, 2011, and entitled "EYEWEAR SUPPORTING AFTER-MARKET ELECTRICAL COMPONENTS," now U.S. Pat. No. 8,500,271, which is hereby incorporated by reference, which in turn is a continuation of U.S. patent application Ser. No. 11/183,269, filed Jul. 15, 2005, and entitled "EYEWEAR SUPPORTING AFTER-MARKET ELECTRICAL COMPONENTS," now U.S. Pat. No. 7,922,321, which is hereby incorporated herein by reference.

This application, by way of U.S. patent application Ser. No. 11/183,269, also claims priority to each of: (i) U.S. Provisional Patent Application No. 60/592,045, filed Jul. 28, 2004, entitled "EYEGLASSES WITH A CLOCK OR OTHER ELECTRICAL COMPONENT," and which is hereby incorporated herein by reference; (ii) U.S. Provisional Patent Application No. 60/605,191, filed Aug. 28, 2004, entitled "ELECTRICAL COMPONENTS FOR USE WITH EYEWEAR, AND METHODS THEREFOR," and which is hereby incorporated herein by reference; (iii) U.S. Provisional Patent Application No. 60/618,107, filed Oct. 12, 2004, and entitled "TETHERED ELECTRICAL COMPONENTS FOR EYEGLASSES," which is hereby incorporated herein by reference; (iv) U.S. Provisional Patent Application No. 60/620,238, filed Oct. 18, 2004, entitled "EYEGLASSES WITH HEARING ENHANCED AND OTHER AUDIO SIGNAL-GENERATING CAPABILITIES," and which is hereby incorporated herein by reference; (v) U.S. Provisional Patent Application No. 60/647,836, filed Jan. 31, 2005, and entitled "EYEGLASSES WITH HEART RATE MONITOR," which is hereby incorporated herein by reference; and (vi) U.S. Provisional Patent Application No. 60/647,826, filed Jan. 31, 2005, and entitled "EYEWEAR WITH ELECTRICAL COMPONENTS," which is hereby incorporated herein by reference.

In addition, this application is related to each of: (i) U.S. patent application Ser. No. 10/822,218, filed Apr. 12, 2004, and entitled "EYEGLASSES FOR WIRELESS COMMUNICATIONS," now U.S. Pat. No. 7,792,552, which is hereby incorporated herein by reference; (ii) U.S. patent application Ser. No. 10/964,011, filed Oct. 12, 2004, and entitled "TETHERED ELECTRICAL COMPONENTS FOR EYEGLASSES," now U.S. Pat. No. 7,192,136, which is hereby incorporated herein by reference; (iii) U.S. patent application Ser. No. 11/006,343, filed Dec. 7, 2004, and entitled "ADAPTABLE COMMUNICATION TECHNIQUES FOR ELECTRONIC DEVICES," now U.S. Pat. No. 7,116,976, which is hereby incorporated herein by reference; (iv) U.S. patent application Ser. No. 11/078,855, filed Mar. 11, 2005, and entitled "EYEWEAR WITH RADIATION DETECTION SYSTEM," now U.S. Pat. No. 7,500,746, which is hereby incorporated herein by reference; (v) U.S. patent application Ser. No. 11/078,857, filed Mar. 11, 2005, and entitled "RADIATION MONITORING SYSTEM," which is hereby incorporated herein by reference; (vi) U.S. patent application Ser. No. 11/183,283, filed Jul. 15, 2005, and entitled "EVENT EYEGLASSES," which is hereby incorporated herein by reference; (vii) U.S. patent application Ser. No. 11/183,262, filed Jul. 15, 2005, and entitled "EYEGLASSES WITH HEARING ENHANCED AND OTHER AUDIO SIGNAL-GENERATING CAPABILITIES," now U.S. Pat. No. 7,760,898, which is hereby incorporated herein by reference; (viii) U.S. patent application Ser. No. 11/183,256, filed Jul. 15, 2005, and entitled "EYEGLASSES WITH ELECTRICAL COMPONENTS," now U.S. Pat. No. 7,500,747, which is hereby incorporated herein by reference; (ix) U.S. patent application Ser. No. 11/183,263, filed Jul. 15, 2005, and entitled "EYEGLASSES WITH A CLOCK OR OTHER ELECTRICAL COMPONENT," now U.S. Pat. No. 7,380,936, which is hereby incorporated herein by reference; and (x) U.S. patent application Ser. No. 11/183,276, filed Jul. 15, 2005, and entitled "EYEGLASSES WITH ACTIVITY MONITORING," now U.S. Pat. No. 7,255,437, which is hereby incorporated herein by reference.

BACKGROUND OF THE INVENTION

Traditionally, eyeglasses have not contained or made any use of electrical components. In recent years, attempts to include electrical components within eyeglasses have had limited success. Even incorporating a small electrical component, such as a microphone, into an eyeglass frame may not be a simple task because, for example, of the necessary electrical connections with the electrical component. Clearly, larger scale electrical components would be more difficult to be provided in or attached to eyeglass frames. Many eyeglasses frames tend to be very compact and lightweight and thus may not have a lot of space for electrical components. Moreover, since eyeglass frames are often fashionable items whose designs are important, there are substantial design tradeoffs involved with providing or attaching electrical components to eyeglass frames.

Accordingly, there remains a need for improved approaches to facilitate use of electrical components with eyeglasses.

SUMMARY

Generally speaking, the invention pertains to techniques for providing wearable electronic devices (e.g., head-worn

electronic devices, such as eyewear) with electrical components are disclosed. The electrical components can provide electrical technology to eyewear to facilitate audio support including enhanced hearing. The electrical components can operate independently or together with other electrical components provided elsewhere. The wearable electronic devices with electronic components can, for example, provide audio output, audio enhancements, or event-related audio content.

The electrical components can support signal capturing, signal processing, signal transmission, signal display, signal storage and/or power provision. The signals can be, for example, analog or digital signals. The electrical components can, for example, be used to provide audio output and/or audio pick-up. The electrical components may include and/or control one or more sensors to monitor and/or signal the conditions of a user of the eyewear. The electrical components may also include and/or control one or more operation indicators to signal operational status of at least some other electrical components. In addition, the electrical components can be or pertain to a circuit board or module, which includes a plurality of electrical components.

The invention can be implemented in numerous ways, including a method, system, device, apparatus, and a computer readable medium. Several embodiments of the invention are discussed below.

In one embodiment, the one or more electrical components support audio capabilities allowing a user to hear audio output. In another embodiment, the one or more electrical components support communication capabilities allowing a user to communicate with a communication device in a hands-free manner.

Embodiments can also relate to tethered electrical components for eyeglasses. According to a number of embodiments of the invention, an apparatus having one or more external electrical components can be tethered, through a tethering mechanism, to one or more electrical components within or attached to a pair of eyeglasses. The one or more external electrical components being tethered by the tethering mechanism, such as a cable or a cord, may be referred to herein as the 'tethered electrical components.' While the one or more electrical components in or attached to the glasses can be referred to herein as 'eyeglass electrical components.'

Tethered electrical components, alone or in combination with eyeglass electrical components can be used for a variety of different applications and uses. Examples of applications and uses include a wireless communication system, a radiation monitoring system, a health monitoring system or a fitness monitoring system. In one embodiment, the tethered electrical components can support wireless communication capabilities allowing a user to communicate with a communication device in a wireless and hands-free manner. In another embodiment, the tethered electrical components can support radiation monitoring such as for monitoring ultraviolet or solar radiation for a wearer of eyeglasses. In still other embodiments, the tethered electrical components can support health or fitness monitoring for a wearer of eyeglasses.

The tethered electrical components can support signal capturing, signal processing, signal transmission, data acquisition, data processing, and/or data storage. For example, the tethered electrical components can, for example, include a power source and/or an electronic controller. The tethered electrical components may also include and/or control one or more operation indicators to signal operational status of the tethered electrical components. In addition, the tethered electrical components may also include and/or control one or more sensors to monitor and/or signal conditions of users.

In other embodiments, a pair of glasses can be provided with one or more embedded or partially embedded electrical components. In a number of the embodiments, with one or more electrical components in the glasses, the electrical components are much easier to operate. For example, you do not have to take an electronic device out from your pocket to use it. The electronic device may already be in your glasses, and you just have to turn it on.

In one embodiment, the electrical components in a pair of glasses can include a speaker and a connector, both at least partially embedded in the glasses. The connector can be a standard or a non-standard connector. The connector can be a male or a female connector. The connector can be at different location on the glasses. For example, the connector can be at the end of a temple of the glasses. The speaker is electrically coupled to the connector. The connection can be with a printed-circuit board in the glasses. The printed-circuit board can be a flexible or rigid printed-circuit board. With the connector, the glasses can access audio signals from an external device, such as a multimedia asset player.

In another embodiment, a pair of glasses can include a storage medium. The memory device can be coupled to another electronic instrument external to the glasses through one or more connectors at the glasses. Such a pair of glasses allows file storage in the glasses.

In yet another embodiment, a pair of glasses can include a speaker, a coder/decoder, a processor and a storage medium. The pair of glasses can serve as a multimedia asset player, such as a MP3 player. There can also be a connector at the glasses to facilitate the transfer of multimedia assets.

Instead of just receiving signals, in one embodiment, a pair of glasses can have a microphone and a wireless transceiver. The pair of glasses allows a user to engage in wireless communication.

In another embodiment, a pair of glasses with wireless coupling capabilities can include a preference indicator. The indicator allows a user to indicate the user's preference regarding, for example, what is being output by the glasses. There can be a radio embedded in the glasses. If the user provides her preference on, for example, the song being played, her preferences can be remotely tracked by a third party. There can be a multimedia asset player in the glasses, with the multimedia assets wirelessly received by the glasses. If the user provides her preference on the assets being played, these assets can be stored in a storage medium in the glasses for later consumption.

In yet another embodiment, there can be one or more knobs on the glasses, for controlling operations of electrical components in the glasses. The location and the number of knobs vary depending on the applications.

In a further embodiment, the glasses can include a camera. The camera can capture what the user sees. In other words, what the user sees can be what the user gets. Images captured can be stored at a remote site. This can be achieved, for example, by downloading the images to a storage device using a connector at the glasses. Or, if the glasses have wirelessly connection capabilities, the images can be wirelessly transmitted to the remote site. The glasses with a camera allow the user wearing the glasses to be remotely control.

In still another embodiment, a pair of glasses can include one or more sensors. There can be different types of sensors. For example, one sensor can be used to determine if the pair of glasses is being worn. Another sensor can be used to detect an environmental condition, such as the amount of

ultraviolet radiation in the vicinity of the glasses. Yet another sensor can be used to detect a condition of the user.

Different embodiments of glasses that can be applied to multiple functions. With a user wearing such a pair of glasses, it would be more difficult for a third party to know the specific function or reason the user is wearing the glasses for. Regarding the locations of the electrical components for the multiple functions, different embodiments range from all of the components in the glasses to the glasses primarily functioning as a headset.

In one embodiment, a pair of glasses can be provided with hearing enhancement and other signal generating capabilities. Most people today do not desire to wear hearing aids or hearing enhancement devices. One major reason could be that they do not want to be perceived as being old. In this embodiment, a pair of glasses, with speakers, has hearing enhancement capabilities. With the speakers in the glasses, the speakers can be positioned in close proximity to the ears of the users. In addition to having hearing enhancement capabilities, the glasses also include at least one electrical component to generate other audio signals. For example, the glasses can play music. Such a hearing-enhanced device can remove the associated stigma of conventional hearing aids. A third party may not be able to tell whether the user is wearing the glasses to hear music or whether the user is wearing the glasses to have his hearing enhanced.

In one embodiment, a pair of glasses can include at least one speaker and typically two. Each speaker is in one of the temples of the glasses, closer to the corresponding hinge of that temple than the other end (the free end) of the temple. There can also be a tube extending from the speaker to guide sound generated by the speaker to the corresponding ear of the user. The tube can be rotated, such as from behind the temple to being downward at an angle towards the ear of the user. The two speakers can also be electrically connected by a conductor, with the conductor linking the speakers through the lens holders of the glasses. The glasses can include a microphone, which can be located close to one of the hinges of the glasses. In another embodiment, there can be two microphones. The one or more microphones can be directional for receiving signals in specific directions.

In another embodiment, to reduce the weight of the glasses and to enhance the ease of aesthetic design of the glasses, some of the hearing enhanced electronics are not in the glasses. Instead they are in a portable device carried by the user. The portable device is electronically coupled to the glasses wirelessly or through a wired connection.

In another embodiment, the glasses can include a wireless transceiver. In this embodiment, the microphone does not have to be at the glasses. The microphone can also be wirelessly coupled to the glasses and/or the portable device.

In another embodiment, the glasses can include a connector for at least one wire to be connected to the glasses. The connector can be at the free end of one of the temples of the glasses, or the connector can be at another location at the glasses. Different types of standard or non-standard connectors can be used. In the wired embodiment, the microphone also does not have to be at the glasses. The microphone can be mounted on the wire that connects the glasses to the portable device.

The glasses can have a number of hearing enhancing capabilities. In one embodiment, the hearing enhancement is for those with mild or medium hearing loss. In another embodiment, the hearing enhancement is for those with severe hearing loss.

One hearing enhancement functionality is frequency-dependent amplification. For example, higher frequencies are amplified more than lower frequencies; certain frequency bands are not amplified; or the frequencies to be amplified are tailored to the user.

To tailor the amplification to a user, hearing enhancement capabilities can be calibrated against the user. The calibration can be done by the user or by a third party. The calibration can be performed through a website, which guides the user through the process. The calibrated frequency hearing profile of the user can be stored. Such calibration can be performed periodically, such as once a year.

The glasses may also include at least one electrical component for power management. Hearing enhancement does not have to be fully functional at all times. In one embodiment, the hearing enhancement function is on demand. The enhancement can go into a sleep mode when there is no audio fluctuation beyond a certain threshold in the ambient environment. The amplification can also depend on the ambient noise level.

In other embodiments, the glasses can also have at least one electrical component to generate other audio signals. These other audio signals do not originate from signals captured by the microphone(s) in the glasses. These signals can originate from relatively private sources or public sources.

In one example of signals originating from private sources, the glasses can include the electrical components to operate as a phone. The glasses can pick up signals from a caller, and the speaker(s) in the glasses re-generate the audio signals of the caller. Again some of the electrical components of the phone can be in a portable device wired or wirelessly coupled to the glasses. There can be an indicator indicating an incoming call. The indicator could be a signal light.

Regarding processing an incoming call, in one embodiment, if the user wants to pick up the incoming call, the hearing enhancement mode can be deactivated. In another embodiment, one or more functionalities of the hearing enhancement mode can operate on the incoming call. There can also be noise cancellation functionalities, such as through two directional microphones, one pointing at the user's mouth, and the other pointing away.

In another example of signals originating from private sources, the glasses can include the electrical components to operate as a player. Again some of the electrical components of the player can be in a portable device wired or wirelessly coupled to the glasses. The player can be a MP3 or other multimedia asset player. The player can be a radio. The radio can be personalized to the user, for example, by being aware of the songs the user prefers. In one embodiment, when the user starts the player, the hearing enhancement mode can be deactivated. In another embodiment, different capabilities of the hearing enhancement mode operate on the signals from the player.

In yet another embodiment, the other audio signals are from public sources. For example, the glasses can be coupled to a conference microphone or a theater speaker wirelessly, and thus be capable of capturing and enhancing the signals from those sources. Again, the coupling can be through a portable device wired or wirelessly coupled to the glasses.

There can be one or more control knobs or switches at the glasses or at a portable device coupled to the glasses. Different types of switches are applicable for different applications.

Regarding power sources for the electrical components in the glasses, in one embodiment, the power sources, such as

batteries, are in the glasses. In another embodiment, the power sources are located outside the glasses, but connected to the glasses through an adapter. In yet another embodiment, the power sources are in a portable device electrically connected to the glasses, and the power sources can be rechargeable.

A number of embodiments have been described with glasses having hearing enhanced and/or other audio signal generation capabilities. In one embodiment, the glasses function as a headset and are adaptable for different applications, such as hearing enhancement, communication (e.g. phone operation) and listening to audio signals (e.g. MP3 operation). When a person is using the headset, a third party again may not be able to tell whether the person is having his hearing enhanced, or listening to other audio signals generated.

Additional benefits of having glasses as headsets are that eyeglasses frames tend to be very compact and lightweight and thus have little space for electrical components. With at least a portion of the electrical components for a system, such as a hearing enhancement system, outside the glasses, additional weights required for the system on the glasses are reduced. Further, eyeglass frames are often fashionable items whose designs are important. By reducing the amount of electrical components, and in turn, space required in the glasses, design tradeoffs required due to having electrical components in the eyeglass frames are reduced.

In a first example of glasses functioning as a headset, the glasses can include a connector and two speakers, one at each temple, both speakers electrically connected through the glasses. The connector can be located at the free end of one of the temples. The connector can be used to receive stereo signals, such as from an MP3 player. Based on a headset-to-phone cord, the speakers in the headset can also be used to receive a phone call.

In a second example of the glasses functioning as a headset, the glasses can include two connectors. Each connector can be at one of the temple tips of the glasses, and each connector can be connected to the speaker at that temple. To send audio signals to the speakers, the two connectors can be tethered and connected together through a connector external to the glasses. The external connector can then operate as the connector in the first example. Regarding other embodiments, the speakers can be in the temples, such as closer to their corresponding lens holders than the free end of the temples. In another example, the speakers can be in the region of the temple tips. The speakers can be embedded in the glasses or can be external to the glasses on stubs or extensions. For speakers that are embedded in the glasses, each speaker can have a tube extending towards an ear to guide audio signals. At the end of each tube, there can be an ear bud for inserting into the ear. The tubes can be permanently attached to the glasses, or each can be attachable to the glasses. The tubes or the stubs can also be retractable and extendable, and the position of the tubes or the stubs can be adjustable.

In a number of embodiments, embodiments can pertain to eyewear having an activity monitoring capability. Activity, such as motion, steps or distance, can be measured by an activity detector. The measured activity can then be used in providing activity-related information to a user of the eyewear. Advantageously, the user of the eyewear is able to easily monitor their degree of activity, without the need to carry a separate electrical device.

In one embodiment, the activity monitoring is provided by a pedometer. A pedometer can also be referred to as a pedometer system herein.

In one embodiment, all components for activity monitoring can be integrated with eyewear (e.g., eyeglasses), such as a frame (e.g., a temple of the frame) of the eyewear. As an example, the eyewear normally includes a pair of temples, and the components for activity monitoring can be embedded within one or both of the temples. In one implementation, all components for activity monitoring are integrated into a single temple of the frame of the eyewear. As an example, these components can be formed together on a substrate. The substrate with the components mounted and interconnected can be referred to as a module. Embedding such a module into the eyewear can thus provide the eyewear with activity monitoring capability with minimal disturbance to design features of the eyewear.

In one embodiment, the eyewear includes an activity detector, electrical circuitry and an output device. The eyewear can also include one or both of a battery and a solar cell to provide power to the electrical circuitry and possibly other components. Further, the eyewear can also include one or more additional sensors. Still further, the eyewear can also include one or more of a being-worn indicator, a memory for data storage, one or more switches, and communication capabilities.

As a pair of glasses, one embodiment can include at least: a first lens holder having a first side and a second side; a second lens holder having a first side and a second side; a bridge element coupling the first side of the first lens holder to the second side of the second lens holder; a first temple pivotally secured to the second side of the first lens holder through a first joint; a second temple pivotally secured to the first side of the second lens holder through a second joint; and a pedometer system at least partially embedded in the glasses.

As a pair of glasses, another embodiment can include at least: an eyeglass frame having at least a pair of lens holders and a pair of temples; and a functional module including a plurality of electrical components that are electrically interconnected with a substrate. The eyeglass frame also includes a cavity for receiving the functional module.

As a pair of glasses, still another embodiment can include at least: a frame having at least a bridge and a pair of temples; and an activity monitor at least partially embedded in the frame and operable to measure activity associated with a user of the pair of glasses.

One embodiment can pertain to a pair of glasses that can provide, in an audio manner, information to a user. The user does not have to hold onto the glasses to hear the information. In other words, the information is provided in a hands-free manner. The information can be pre-recorded. In another embodiment, the information is transmitted to and received by the glasses. This allows the information to be dynamic. Though not necessary, the information can be directly relevant to an event attended by the user. There can also be a user input mechanism at the glasses to allow the user to provide user input, including user feedback.

In one embodiment, a pair of glasses has first and second lens holders for receiving lenses. Each of the lens holders has a first side and a second side. The pair of glasses has a bridge element that couples the first side of the first lens holder to the second side of the second lens holder. The pair of glasses also includes a first temple and a second temple. The temples can also be known as arms. The first temple is pivotally secured to the second side of the first lens holder through a joint, while the second temple is pivotally secured to the first side of the second lens holder through another

joint. The pair of glasses can also include a speaker, which is powered by a power source, and the speaker can be turned on and off.

In another embodiment, each of the temples has a tapered profile that is wider when it is closer to its corresponding joint. Each lens holder can also have a shield at least at one of its edges. In one embodiment, the shields are shaped to generally conform to the profile of the face of the wearer. The surface areas on the temples or the shields can be used for promotion. For example, advertisements can be located on these areas.

A pair of glasses can deliver information through a speaker at the glasses to the person wearing the glasses. The information can be related to an event. The event can be organized (or sponsored) by a company. For example, an event can be a sporting contest, a trade show, a tour, etc. In another embodiment, an event can be viewed from the perspective of the person attending it. For example, an event can be buying a product from a store. When the person is at the store, the person is at the event.

The information available can be for entertainment, or for promotion of a product or a company. The information can be in different languages depending on the preference of the person. The information can be available for a limited duration of time. This duration of time can be set by an event. When the event is over, there can be no more information available. The duration can also be set by the power source running the electrical components in the glasses. The power source can be designed such that it is not replaceable by the user, or replacing the power source typically would break at least a portion of the glasses. So, when the power source is drained, no more information will be available to the user.

In one embodiment, a speaker at a pair of glasses cab be part of a radio, and the information is wirelessly received by the radio. In another embodiment, the speaker can be part of a player, with the information previously recorded and stored in a storage medium of the player. The previously recorded information can be stored in the glasses, or in a storage device attachable to the glasses.

In another embodiment, a pair of glasses can include an information input mechanism, which allows a user to provide inputs. The mechanism can be implemented by a switch at the glasses. The glasses can have a transceiver. The user inputs can be wirelessly transmitted to, for example, the company sponsoring the event that the user is attending. The company can use such glasses, for example, to obtain feedback from the audience of the event.

In one embodiment, a pair of glasses can be given away, such as for promotional purposes. The glasses can also be rented out during an event. Such glasses can be tracked with bar codes or RFID tags.

In yet another embodiment, a pair of glasses can function as a headset, and are wired or wirelessly coupled to a portable device. The portable device can also be carried by the user of the glasses. The portable device can provide more areas for user inputs and outputs.

Other aspects and advantages of the invention will become apparent from the following detailed description taken in conjunction with the accompanying drawings which illustrate, by way of example, the principles of the invention.

BRIEF DESCRIPTION OF THE DRAWINGS

The invention will be readily understood by the following detailed description in conjunction with the accompanying drawings, wherein like reference numerals designate like structural elements, and in which:

FIG. **1** is a perspective view of a pair of glasses according to one embodiment of the invention.

FIG. **2** illustrates a diagram of a number of different embodiments of temple arrangements according to the invention.

FIG. **3**A is a diagram of a temple arrangement according to one embodiment of the invention.

FIG. **3**B is a diagram of a temple cover that at least partially covers a temple (e.g., temple and/or temple tip) according to one embodiment of the invention.

FIG. **3**C is a diagram of a fit-over temple that at least partially fits over a temple (e.g., temple and/or temple tip) according to one embodiment of the invention.

FIGS. **3**D and **3**E are diagrams of a temple arrangement according to another embodiment of the invention.

FIG. **4** shows examples of different electrical components according to the invention.

FIG. **5** is a chart that depicts examples of sensors suitable for use according to the invention.

FIG. **6** illustrates a diagram of a number of different embodiments of temple adapters according to the invention.

FIG. **7**A is a diagram of a temple adapter according to one embodiment of the invention.

FIG. **7**B is a diagram of a temple adapter according to another embodiment of the invention.

FIGS. **8**A and **8**B are diagrams of a temple adapter according to another embodiment of the invention.

FIG. **9**A is a diagram of a temple adapter according to one embodiment of the invention.

FIGS. **9**B and **9**C are diagrams of a temple adapter according to another embodiment of the invention.

FIG. **9**D is a diagram of a temple adapter according to still another embodiment of the invention.

FIGS. **10**A-**10**C are diagrams of a temple having a bone conducting element according to still other embodiments of the invention.

FIG. **11** is perspective diagram of an apparatus having tethered electrical components according to one embodiment of the invention.

FIG. **12**A is a block diagram of electrical components to be tethered to a pair of eyeglasses according to one embodiment of the invention.

FIG. **12**B is a block diagram of electrical components to be tethered to a pair of eyeglasses according to one embodiment of the invention.

FIG. **12**C shows an embodiment of the invention where a user is wearing a pair of glasses, which include electrical components, such as a speaker.

FIGS. **13**A-**13**D are diagrams of arrangements of a speaker and a microphone provided proximate to an arm of a frame of a pair of eyeglasses according to different embodiments of the invention.

FIG. **13**E is a diagram of an arrangement of a speaker in a base that provides audio output in the vicinity of an arm of a frame of a pair of eyeglasses according to another embodiment of the invention.

FIG. **14**A is a diagram of an arrangement of an arm of a frame of a pair of eyeglasses and a cord of an apparatus having tethered electrical components according to one embodiment of the invention.

FIG. **14**B is a diagram of an arrangement of an arm for a frame of a pair of eyeglasses with electrical components according to one embodiment of the invention.

FIG. **14**C is a diagram of an arrangement of an arm for a frame of a pair of eyeglasses with electrical components according to another embodiment of the invention.

FIG. **15**A is a diagram of a connection arrangement of an arm and a cord according to one embodiment of the invention.

FIG. **15**B is a diagram of a connection arrangement of an arm and a cord according to another embodiment of the invention.

FIG. **15**C is a side view of the connection arrangement of FIG. **15**B according to one embodiment of the invention when the connector and the connector are coupled together.

FIG. **16** is a side view of an apparatus having electrical components tethered to another device according to one embodiment of the invention.

FIG. **17** is a side view of an apparatus having tethered electrical components according to another embodiment of the invention.

FIG. **18** is a flow diagram of call processing using tethered wireless communication components according to one embodiment of the invention.

FIG. **19** is a flow diagram of operational condition processing using tethered electrical components according to one embodiment of the invention.

FIG. **20** is a flow diagram of sensor processing using tethered electrical components according to one embodiment of the invention.

FIG. **21** shows one embodiment of the invention with a speaker in one of the temples of the glasses.

FIG. **22** shows a tube extending from a speaker at a temple of the glasses to guide sound to one of the ears of the user according to one embodiment of the invention.

FIG. **23** shows a retractable tube extending from a speaker at a temple of the glasses according to one embodiment of the invention.

FIG. **24** shows a funnel at the output of a speaker in the glasses according to one embodiment of the invention.

FIG. **25** shows a male connector at the end of a temple according to one embodiment of the invention.

FIGS. **26**A-**26**B illustrate a process to make a non-standard female plug couple to a male connector at a pair of glasses according to one embodiment of the invention.

FIG. **27** illustrates another non-standard connector, applicable to clamp onto a temple of a pair of glasses according to an embodiment of the invention.

FIGS. **28**A-**28**E shows different embodiments of standard connectors located at different positions on the temple of a pair of glasses according to the invention.

FIGS. **28**F-**28**H are diagrams pertaining to providing a removable electronic device with an eyeglass frame according to one embodiment of the invention.

FIG. **28**I is a diagram of a temple of an eyeglass frame according to another embodiment of the invention.

FIG. **29** shows some of the electrical components for a MP3 player according to an embodiment of the invention.

FIG. **30** shows an embodiment of the invention where a user is wearing a pair of glasses with electrical components, tethered to a base, which is connected to a portable device.

FIGS. **31**A-**31**B show different embodiments of the present invention illustrating some of the electrical components for wireless connections to a pair of glasses.

FIG. **32** shows a process for a personalized radio according to one embodiment of the present invention.

FIG. **33** shows a number of attributes of control knobs according to different embodiments of the present invention.

FIG. **34** shows some of the electrical components for capturing images with a pair of glasses according to an embodiment of the present invention.

FIG. **35** shows an operation of taking actions based on images captured with a pair of glasses with wireless transceiver capability according to one embodiment of the invention.

FIG. **36** shows an operation to provide messages to a user based on images captured by a pair of glasses according to an embodiment of the present invention.

FIG. **37**A is a chart that depicts examples of sensors in a pair of glasses according to different embodiments of the present invention.

FIG. **37**B is a diagram of a temple arrangement according to one embodiment of the invention.

FIG. **37**C is a diagram of a cover that at least partially covers a temple according to one embodiment of the invention.

FIG. **37**D is a diagram of a fit-over temple that at least partially fits over a temple according to one embodiment of the invention.

FIG. **38** shows an embodiment including an eye mask according to the invention.

FIG. **39** shows an embodiment including a night cap according to the invention.

FIG. **40**A is a diagram illustrating a temple having a slot for receiving a removable electronic device according to one embodiment of the invention

FIG. **40**B is a diagram illustrating the temple having a recessed lower portion according to another embodiment of the invention.

FIGS. **41**A and **41**B are diagrams illustrating a pair of glasses having a camera coupled thereto, according to one embodiment.

FIG. **42** shows one embodiment of the invention with a pair of glasses having speakers.

FIG. **43** shows a tube extending from a speaker at a temple of the glasses to guide sound to one of the ears of the user according to one embodiment of the invention.

FIG. **44** shows a retractable tube extending from a speaker at one of the temples of the glasses according to one embodiment of the invention.

FIG. **45** shows a funnel at the output of a speaker in the glasses according to one embodiment of the invention.

FIGS. **46**A-**46**B show an embodiment of the invention with a wire connecting speakers in the glasses.

FIG. **47** shows one embodiment of the invention with a pair of glasses having speakers that are wirelessly coupled to a portable device.

FIGS. **48**A-**48**B show different embodiments of the present invention illustrating some of the electrical components for wireless connections to a pair of glasses.

FIG. **49** shows a male stereo connector at the end of a temple according to one embodiment of the invention.

FIG. **50** illustrates a connector applicable to clamp onto a temple of a pair of glasses according to an embodiment of the invention.

FIG. **51** shows one embodiment of the invention with a pair of glasses having a microphone coupled to the wire connected to a portable device.

FIG. **52** shows different embodiments regarding frequency-dependent amplification of the present invention.

FIG. **53** shows a number of embodiments regarding hearing calibration of the present invention.

FIG. **54** shows a number of embodiments regarding power management of the present invention.

FIG. **55** shows different embodiments of sources of other audio signals generated by the glasses according to the present invention.

FIG. **56** is a flow diagram of call processing according to one embodiment of the invention.

FIG. **57** shows some of the electrical components for an MP3 player according to an embodiment of the invention.

FIG. **58** shows one embodiment of the invention that has a card with electrical components coupled to a pair of glasses through a connector at a temple of the glasses.

FIG. **59** shows a process for a personalized radio according to one embodiment of the present invention.

FIG. **60** shows a number of attributes of control knobs according to different embodiments of the present invention.

FIGS. **61**A-**61**C illustrate different embodiments of power sources for a pair of glasses according to the invention.

FIGS. **62**A-**62**B show different embodiments of headset-to-phone cords according to the present invention.

FIG. **63** shows an embodiment of the invention of a cord with a switch for both a cell phone and a player.

FIG. **64** shows one embodiment of a mono-plugs-to-stereo-plug adapter cord according to the invention.

FIG. **65** shows an embodiment of the invention with a speaker at a temple tip with an extension for attachment to a tube.

FIG. **66** shows an embodiment of the invention with the temples not extending behind the ears.

FIG. **67** shows an embodiment of the invention with a pair of eyeglasses functioning as a headset that has a camera, a microphone and a speaker.

FIG. **68** illustrates a pair of glasses according to one embodiment of the invention.

FIG. **69** illustrates a temple according to one embodiment of the invention.

FIG. **70** is a block diagram of a pedometer system according to one embodiment of the invention.

FIG. **71**A illustrates a first side of an electrical system module according to one embodiment of the invention.

FIG. **71**B illustrates a second side of the electrical system module illustrated in FIG. **71**A.

FIG. **71**C illustrates a side view of the electrical system module illustrated in FIG. **71**A.

FIG. **71**D illustrates a temple according to one embodiment of the invention.

FIG. **72**A illustrates representative output data for a pedometer system (pedometer) according to one embodiment of the invention.

FIG. **72**B illustrates representative input data for a pedometer system (pedometer) according to one embodiment of the invention.

FIG. **73** is a flow diagram of a distance output process according to one embodiment of the invention.

FIG. **74** is a chart that depicts examples of auxiliary sensors that can be utilized with the eyewear.

FIG. **75** shows one embodiment of the invention with a speaker in one of the temples of a pair of glasses.

FIG. **76** shows a number of attributes regarding a number of applications of glasses according to different embodiments of the invention.

FIG. **77** shows some electrical components of a player according to an embodiment of the invention.

FIG. **78** illustrates a number of forces activating a switch according to a number of embodiments of the invention.

FIG. **79** illustrates a number of mechanical forces activating a switch according to a number of embodiments of the invention.

FIG. **80** shows a Hall-effect detector at a joint of a pair of glasses according to an embodiment of the invention.

FIGS. **81**A-**81**C illustrate different embodiments of a quadrature sensor according to the invention.

Embodiments of the invention are discussed below with reference to the above-noted figures. However, those skilled in the art will readily appreciate that the detailed description given herein with respect to these figures is for explanatory purposes as the invention extends beyond these limited embodiments.

DETAILED DESCRIPTION OF EMBODIMENTS OF THE INVENTION

The invention pertains to techniques for providing eyewear with electrical components. The electrical components can provide electrical technology to eyewear (e.g., eyeglasses) without having to substantially compromise aesthetic design principles of the eyewear. The electrical components can operate independently or together with other electrical components provided elsewhere. The eyewear with electronic components can, for example, provide audio output, audio enhancements, or event-related audio content.

One aspect of the invention relates to temple arrangements for use with eyeglasses. According to this aspect, a temple arrangement includes one or more electrical components. The one or more electrical components are attached to or at least partially embedded in the temple arrangement.

Another aspect of the invention relates to a temple adapter for use with eyeglasses. According to this aspect, a temple adapter includes one or more electrical components that are able to be mechanically (and optionally electrically) coupled to a temple (including a temple tip) of the eyeglasses.

The electrical components can support signal capturing, signal processing, signal transmission, signal display, signal storage and/or power provision. The signals can be, for example, analog or digital signals. The electrical components can, for example, be used to provide audio output and/or audio pick-up. The electrical components may include and/or control one or more sensors to monitor and/or signal the conditions of a user of the eyewear. The electrical components may also include and/or control one or more operation indicators to signal operational status of at least some other electrical components. In addition, the electrical components can be or pertain to a circuit board or module, which includes a plurality of electrical components.

In one embodiment, the one or more electrical components support audio capabilities allowing a user to hear audio output. In another embodiment, the one or more electrical components support communication capabilities allowing a user to communicate with a communication device in a hands-free manner.

Embodiments of different aspects of the invention are discussed below with reference to FIGS. **1**-**81**(*c*). However, those skilled in the art will readily appreciate that the detailed description given herein with respect to these figures is for explanatory purposes as the invention extends beyond these limited embodiments.

FIG. **1** is a perspective view of a pair of glasses **100** according to one embodiment of the invention. The glasses **100** include a frame and a pair of lenses **102**. The frame has lens holders **104** that hold the lenses **102** in position. The frame also has a bridge **106**. The glasses **100** further include a pair of temples (or arms) **108**. The temples **108** are considered part of the frame. As shown in FIG. **1**, each of the temples **108** is coupled to one of the lens holders **104** by a

hinge **109**. In one embodiment, the temples **108** can be removed from the frame (e.g., at the hinge **109**).

In addition, temple arrangements **110** are attached to the temples **108**. Here, one or both of the temples **108** can include a temple arrangement **110**. A temple arrangement **110** can include one or more electrical components **112**. In one embodiment, the temple arrangements **110** can be considered separate parts that can be attached to respective temples **108**. Once attached, the temple arrangements **110** can be considered part of, or an extension to, the temples **108**.

By having one or more electrical components **112** in one or more of the temple arrangements **110**, electrical capabilities can be provided to the glasses **100** without burdensome impact to the design of other parts of the frames. Moreover, by providing electrical components in one or more of the temple arrangements **112**, electrical capabilities can be added to eyeglasses in an after-market manner. Still further, by replacing temple arrangements, a user could alter the electrical capabilities of his eyeglasses.

In one embodiment, the glasses **100** do not have any other embedded electrical components, such as within the frame, except those in one or both of the temple arrangements **112**. In another embodiment, the glasses **100** include one or more other electrical components embedded or attached to the frame of the glasses **100** and the components are electrically coupled to the one or more electrical components **112** in one or both of the temple arrangements **110**.

In different embodiments, the glasses **100** can be, for example, a pair of sunglasses, fit-over glasses, prescription glasses, reading glasses, or safety glasses.

FIG. **2** illustrates a diagram of a number of different embodiments of temple arrangements **200** according to the invention. A temple arrangement **200** can be a temple tip, a temple fit-over, or a temple cover. In one embodiment, a temple tip is a structure that attaches to a rearward portion of a temple. In one embodiment, a temple tip can pertain to an enclosure that grabs onto a rearward portion of a temple. A temple tip is particularly common for wire frame eyeglass where the temple tip attaches to the rearward end of the temple and provides a surface suitable for positioning proximate to the user's ear. For example, FIG. **1** illustrates the temple arrangement **112** implemented as a temple tip.

In one embodiment, a temple tip is removable from its corresponding temple so that it can be replaced. The temple tip can be originally provided with the purchase of a pair of eyeglasses. Alternatively, the temple tip can be a replacement part that can be purchased separately and subsequently mounted onto a rearward portion of a temple of a pair of eyeglasses after removing any original temple tip. In another embodiment, a temple tip is permanently held onto the corresponding temple, for example, by an adhesive (e.g., epoxy, glue, etc.).

In one embodiment, a temple fit-over fits over at least a portion of the rearward end of a temple. If the rearward end of the temple has a temple tip, at least a portion of the temple tip can be fitted over by the temple fit-over. In one embodiment, a temple cover slides over and at least partially covers a portion of the rearward end of a temple. If the rearward end of the temple has a temple tip, at least a portion of the temple tip can be covered by the temple cover.

A temple cover is typically made of a material that is more flexible than a temple fit-over. For example, a temple cover can be made of a fabric or other materials, such as a sock or sleeve; while a temple fit-over can be made of plastic.

A temple arrangement **200** can be made of the same or different materials than the temple or other parts of the frame of the pair of eyeglasses. To illustrate, a pair of glasses with a metal frame can have non-metallic temple tips. A temple arrangement **200** can be of a color that is the same as, or similar to, or different from, that of the temple.

A temple arrangement **200** can be held onto a temple by frictional force. For example, if the temple arrangement **200** is a temple fit-over, it can be held onto an existing temple or temple tip by frictional force. Here, the temple fit-over is often removable. In another embodiment, the temple arrangement **200** can be permanently held onto its corresponding temple or temple tip. For example, the temple arrangement can be permanently held onto the corresponding temple or temple tip, for example, by an adhesive (e.g., epoxy, glue, etc.).

Depending on applications, a temple arrangement can be of different shapes. The shape can depend on the type of glasses. For example, a temple arrangement for fit-over glasses can be bigger than a temple arrangement for prescription glasses. The shape of the temple arrangement can also depend on applications for the electronic component(s) that are fully or partially embedded in the temple arrangement. Of course, aesthetic reasons can also influence shape (e.g., design, size, style) of a temple arrangement.

In one embodiment, the temple arrangement is a structure that has at least one electrical component attached thereto or at least partially embedded therein. In another embodiment, all of the electrical components to be provided with the temple arrangement are at least partially embedded in the temple arrangement.

FIG. **3**A is a diagram of a portion **300** of a pair of eyeglasses according to one embodiment of the invention. The portion **300** includes a temple **302** that is associated with a pair of eyeglasses. Over the end of the temple **302** that is opposite the associated lens holder, a temple tip **304** is provided. The temple tip **304** can, for example, be held to the temple **302** by frictional forces and/or adhesive. The temple tip **304** includes at least one electrical component **306** that is at least partially embedded therein. A wide range of functionalities can be provided by the at least one electrical component **306**. The temple tip **304** can be considered separate from or part of the temple **302**. For example, when the temple tip **304** is not attached to the temple **302**, the temple tip **304** is considered a separate part. As another example, when the temple tip **304** is attached to the temple **302**, the temple tip **304** can be considered separate from or part of the temple **302**.

The temple tip **304** can be manufactured and delivered to resellers or retailers and thereafter sold attached to eyeglasses. Alternatively, the temple tip **304** can be separately provided as an optional replacement temple tip for an original temple tip. Hence, after or during purchasing a pair of eyeglasses, upgrade of the eyeglasses can be had by replacing an existing temple tip with a replacement temple tip. The colors and shapes of the temple tip **304** can vary widely. In the after manufacturing environment, the reseller or retailer can be provided with a range of different colors and shapes so that a user can receive a replacement temple tip that reasonably matches the color and shape of the temple or that provides an altered appearance as desired by the user.

A number of embodiments have been described regarding one or more electrical components at least partially embedded in a pair of glasses. In one embodiment, one or more electrical components are at least partially embedded in a temple tip of a pair of glasses. Temple tips are relatively common for wire or metal frames which have wire or metal temples. The pair of glasses has a first and a second lens holders for receiving lenses. Each of the lens holders has a

first side and a second side. The pair of glasses has a bridge element that couples the first side of the first lens holder to the second side of the second lens holder. The pair of glasses also includes a first temple and a second temple. The first temple is pivotally secured to the second side of the first lens holder through a joint, while the second temple is pivotally secured to the first side of the second lens holder through another joint. A temple typically has two ends, a first end and a second end. The first end can be the end that is pivotally secured to a lens holder through a joint, and the second end can be the other end of the temple. It is not uncommon that a temple includes a main body and an enclosure that grabs onto the main body of the temple. The second end is typically where the enclosure grabs onto the main body. The enclosure can be made of a different material than the main body of the temple. In one embodiment, such an enclosure is a temple tip, and there is an electrical component, partially or fully, embedded in the temple tip. There can also be a connector at the temple tip. In another embodiment, the temple tip can include a female connector. In still another embodiment, as a temple tip grabs onto the main body of the temple, a connector at the temple tip (such as a female connector) can make electrical contact with another connector (such as a male connector) at the main body of the temple. Typically, particularly before a pair of glasses has been extensively worn, the temple tip can be removed and re-inserted back on to the main body of the temple without much difficulty. Such a temple tip can be an after-market component, with different temple tips having different electrical components to serve different functions.

Besides a temple tip such as illustrated in FIG. **3**A, a temple tip can also be effectively modified by a fit-over temple or temple cover.

FIG. **3**B is a diagram of a temple cover **320** that at least partially covers a temple (e.g., temple and/or temple tip) according to one embodiment of the invention. As an example, the temple cover **320** can be made of a fabric or other material, such as a sock or sleeve, that slides over and at least partially covers a temple or a temple tip. The temple cover **320** can include at least one electrical component **322** that is either attached thereto or at least partially embedded therein. The temple cover **320** can also include an opening **324** so as to receive a temple or a temple tip. In one embodiment, the temple cover **320** is placed over a substantial portion of a temple tip, and the opening **324** can extend to a far end **326** so as to receive all or a substantial part of the temple tip. The temple cover **320** can, for example, be held to a temple or a temple tip by frictional forces and/or adhesive.

FIG. **3**C is a diagram of a fit-over temple **340** that at least partially fits over a temple (e.g., temple and/or temple tip) according to one embodiment of the invention. For example, the fit-over temple **340** can at least partially fit-over a temple tip. The fit-over temple **340** includes at least one electrical component **342** that is either attached thereto or at least partially embedded therein. The fit-over temple **340** can also include an opening **344** so as to receive a temple or a temple tip. The depth and/or width of the opening **344** within the fit-over temple **340** can vary depending on the extent to which it is being fit over a temple or a temple tip. The fit-over temple **340** can, for example, be held to a temple or temple tip by frictional forces and/or adhesive. As an example, the fit-over temple **340** can be plastic or other material. The colors and shapes of the fit-over temple **340** can have a lot of variations.

A wide range of functionalities can be provided by the at least one electrical component (e.g., electrical component **322** and **342**). In the after manufacturing environment, the reseller or retailer can be provided with a range of different colors and shapes so that a user can receive a replacement temple cover or fit-over temple that reasonably matches the color and shape of the temple or that provides an altered appearance as desired by the user.

FIGS. **3**D and **3**E are diagrams of a temple arrangement **360** according to another embodiment of the invention. FIG. **3**D is a side view of the temple arrangement **360**, and FIG. **3**E is a front view of the temple arrangement **360**. In this embodiment, the temple arrangement **360** is a temple tip that can be attached to a temple (e.g., temple body) of a pair of eyeglasses. The temple arrangement **360** includes a speaker housing **362** allowing a speaker **364** to be at least partially embedded within the temple arrangement **360**. An audio sound output by the speaker **364** is coupled to an ear plug **366** by way of the speaker housing **362** and a tube **368**. Typically, the tube **368** is a flexible tube, such as a flexible plastic tube. A user of the eyeglasses having the temple arrangement **360** can place the ear plug **366** within her ear to facilitate coupling of the audio sound from the speaker **364** to the ear. The tube **368** can have a disconnection region **370** whereby at least a section of the tube **368** and the attached ear plug **366** can be removed from the temple arrangement **360**, such as when audio output is not being listened to. The tube **368** and/or the speaker housing **362** can also be capable of rotating with respect to the temple arrangement **360** to facilitate ease of use. Still further, the temple arrangement **360** can include a connector **372**, such as a male audio connector (e.g., 2.5 mm, stereo mini-phone connector). The connector **372** provides a means to electrically connect an external audio source to the speaker **364** within the temple arrangement **360**. For example, at least one wire (not shown) that is internal to the temple arrangement **360** can be used to electrically connect the speaker **364** to the connector **372**.

In one embodiment, an electrical component is a component of an electrical circuit or system, and the electrical circuit or system is for performing at least a desired, intended or predetermined function.

In one embodiment, a temple tip, fit-over temple or temple cover according to the invention can further include a connector or cable to facilitate electrical connection with the at least one electrical component that is either attached to a temple or a temple tip or at least partially embedded therein.

FIG. **4** shows examples of different electrical components according to the present invention. Different embodiments of temple arrangements or temple adapters according to the invention can use one or more of these different electrical components.

In one embodiment, the electrical component is an electrical connector. The connector can be a male connector located at a temple tip. In another embodiment, the connector can be a female connector at a temple tip. For example, as a temple tip grabs onto the main body of its corresponding temple, a female connector at the temple tip can make electrical contact with a male connector at the temple. Examples of different types of connectors have previously been described in the related patent applications, which have been incorporated by reference.

In one embodiment, the embedded electrical component is an electrical switch, such as one or more of those previously described in the related patent applications, which have been incorporated by reference.

In one embodiment, one electrical component can be a power source. The power source can be a battery, a solar cell or other type of power source.

In one embodiment, one electrical component can include a circuit board. The circuit board can be a rigid or a flexible circuit board.

In one embodiment, one electrical component can be an indicator. The indicator can be audio, visual, or physical (e.g., vibration). For example, the indicator can signal an event or condition to a user of the glasses.

In one embodiment, one electrical component can be a display, such as a LCD display.

In one embodiment, one electrical component can be a speaker. The speaker can provide an audio output for the benefit of the wearer of the glasses. The speaker can directly transmit sound to a user, such as a speaker mounted on an exterior surface of an eyeglass frame, or partially or fully embedded in an eyeglass frame, or a bone conducting type of speaker. Alternatively, the speaker can indirectly transmit sound to a user, such as through the use of a tube to deliver audio output proximate to a user's ear.

In one embodiment, one electrical component can be a controller. The controller can, for example, be a microprocessor.

In one embodiment, one electrical component can be a memory device. The memory device can be non-volatile memory, such as FLASH memory. The data stored in the memory device can be user data or data provided by other electrical components.

In one embodiment, one electrical component is a frequency receiver or a frequency transmitter. They can be in the radio frequency range.

In one embodiment, one electrical component can be a sensor. The sensor can be a temperature sensor. The temperature sensor can be used to sense the temperature of the wearer. In one embodiment, such a temperature sensor is in a temple tip. In measuring the temperature, the user can further press the temple tip towards his head to ensure better connection. One can also put the temple under one's tongue to measure body temperature.

In other different embodiments, one electrical component can be a motion detector, a speed sensor, a rate of ascent (or descent) detector, a pressure detector, or a detector for radiation, such as an ultraviolet (UV) detector.

In one embodiment, one electrical component is a radio frequency identification (RFID) tag. A RFID tag typically includes a memory chip and a radio antenna. The memory chip usually has a small storage capacity and thus does not include a large amount of information. A portion of such information can provide identifying information for the glasses. The memory chip may only have a few kilobytes, sufficient to encode information, such as a serial number, where and when the product (such as eyeglasses) was manufactured, and other relevant information.

The RFID tags can come in a number of configurations. For example, an active tag uses a battery-powered transponder to constantly emit signals which can carry information programmed into the memory chip. Active tags are more applicable to situations where readers are not close to the tags. A semi-passive tag likewise has a battery, but may not be activated until it receives a signal from a reader. They are more applicable to situations that do not need continuous connection and accessing. A passive tag has no battery; its antenna extracts power from a reader's radio wave signal to transmit the identifying information. Passive tags are typically relatively inexpensive, but may have to be within a few feet of a reader to extract power. The electrical component can be a passive RFID tag, or some other type of tag.

In one embodiment, one electrical component can be for locating the corresponding glasses. For example, the electrical component can produce a beeping tone when it receives a specific radio signal. A handheld device (such as a key chain accessory, can generate the specific radio signal (e.g., when a button is pushed). Through the beeping tone, one can locate the glasses.

As noted above, in one embodiment, the electrical component can be a sensor. More generally, a pair of glasses can include one or more sensors that can be used individually or in combination. FIG. **5** is a chart **500** that depicts examples of sensors suitable for use in or attached to the glasses.

In one embodiment, the sensor is a "being worn" sensor. The "being worn" sensor indicates whether the glasses are being worn by its user. The "being worn" operation can be performed using, for example, a thermal sensor, a motion detector, a stress sensor or a switch.

In one embodiment, a motion detector is used as a "being worn" sensor. A threshold can be set, such that if the amount of motion exceeds the threshold, the glasses are assumed to be worn. The motion detector can, for example, be achieved by a mechanical mechanism or an accelerometer.

In another embodiment, the "being worn" sensor includes two thermal sensors. One sensor can be at approximately the middle of a temple, such as in a region that touches the head of the user wearing the glasses. The other sensor can be at one end of the temple, the end that is close to its hinge. If the temperature differential between the two sensors is beyond a certain preset value, the glasses would be assumed to be worn. The differential is presumed to be caused by a person wearing the pair of glasses.

In yet another embodiment, the "being worn" sensor includes a stress sensor at the hinge of the temple. The assumption is that when the eyewear is worn, the hinge is typically slightly stretched because typically, the width of the head of the user is slightly wider than the width between the temples when the two temples are in the extended positions. If the value of the stress sensor is beyond a certain preset value, the glasses would be assumed to be worn.

In a further embodiment, the "being worn" sensor can be a switch. For example, at the hinge between a temple and its corresponding lens holder, there is a switch. When that temple is in its extended position, i.e., fully extended outwards, the switch is turned on. The switch can be a pin-type switch. When the temple is fully extended outwards, the pin is pressed. When both temples are fully extended outwards, in one embodiment, the glasses would be assumed to be worn by the user.

In one embodiment, another type of sensor is an environmental sensor. The environmental sensor can sense environmental conditions, such as one or more of radiation (e.g., ultraviolet radiation or light), temperature (e.g., ambient temperature), pressure, humidity and toxins (e.g., chemicals, etc.).

In another embodiment, another type of sensor is a condition sensor. The condition sensor can sense the conditions of the user of the glasses. Examples of condition sensors include sensing one or more of distance traveled, location, speed, calories consumed, temperature and vital signs associated with the user of the glasses. The distance traveled could represent the horizontal distance traveled or the vertical distance (i.e., elevation) traveled. The speed can be the rate of movement along the horizontal distance traveled and/or the vertical distance. In yet another embodi-

ment, the condition sensor can indirectly sense emotional conditions of the user of the glasses.

The sensors can be provided in a redundant or fault-tolerant manner. For example, sensors can come in pairs in the glasses. When one malfunctions, the other one will take over its operation. In another embodiment, the sensor information can be processed in a differential manner to examine changes to the sensor information. The differential can be based on time. The sensors can by powered by a battery, solar energy, or kinetic energy. For reduced power consumption, the sensors can remain in a low-power state unless data is being acquired by the sensors. In yet another embodiment, two or more of the sensors can communicate with one another (wired or wirelessly) to exchange data or control information.

FIG. **6** illustrates a diagram of a number of different embodiments of temple adapters **600** according to the invention. The temple adapters **600** serve to adapt a temple (i.e., a temple body or temple tip) of a pair of eyeglasses to provide for at least one electrical component. In one embodiment, a temple adapter can clip onto a temple body or a temple tip. In another embodiment, a temple adapter can mount to a post provided on a temple body or a temple tip. In still another embodiment, a temple adapter can mount to a hole provided in a temple body or a temple tip. In yet another embodiment, a temple adapter can be bonded (or adhered) to a temple body or a temple tip.

The temple adapter is particularly well suited to adapt a pair of eyeglasses with communication components, such as a speaker and/or a microphone. As an example, a standard pair of eyeglasses can be transformed into an operational headset by attaching a temple adapter to a temple body or temple tip of the pair of eyeglasses, wherein the temple adapter includes at least one speaker and at least one microphone.

The temple adapter can be rigid or malleable. The benefit of being malleable is that the particular geometric arrangement/assembly of the temple adapter can be altered by its user for better user comfort or operation.

In one embodiment, the temple adapter is a structure that has at least one electrical component attached thereto or at least partially embedded therein. In another embodiment, all of the electrical components to be provided with the temple adapter are at least partially embedded in the temple adapter.

FIG. **7**A is a diagram of a temple adapter **700** according to one embodiment of the invention. The temple adapter **700** attaches to a temple **702** (including any temple tip using a clip **704**. The clip **704** can use force, such as an interference fit force or spring-induced force, to attach the temple adapter **700** to the temple **702**. Besides the clip **704**, the temple adapter **700** includes an angled arm **706** and an ear bud **708**. The angled arm **706** can be malleable. When a pair of eyeglasses associated with the temple **702** is being worn by a user, the ear bud **708** can be placed in or near the user's ear canal. The ear bud **708** contains a speaker and receives electrical signals via a wire, such wire can be provided internal or external to the temple adapter **700** and can originate at the temple **702** or external to the temple **702**.

FIG. **7**B is a diagram of a temple adapter **720** according to another embodiment of the invention. The temple adapter **720** attaches to a temple **722** (including any temple tip) using a clip **724**. The clip **724** can use force, such as an interference fit force or spring-induced force, to hold the temple adapter **720** to the temple **722**. Besides the clip **724**, the temple adapter **720** includes an angled arm **726**, an ear bud **728**, a microphone **730**, an extension arm **732** and a cord **734**. In this embodiment, the cord **734** includes a wire that connects to the speaker within the ear bud **728** and another wire that connects to the microphone **730**. There can be one or more conductors inside a given wire. For example, a wire might have one conductor serving as a signal line and another conductor serving as ground. Such wires can be provided internal to the extension arm **732** and the angled arm **726**. The arm **732** can serve to guide the cord **734** away from the user's ear or rearward. The angled arm **726** can be malleable. The placement or position of the microphone **730** can vary with implementation. As shown in FIG. **7**B, the microphone **730** is directed forward to a user's front when a pair of eyeglasses associated with the temple **722** are being worn. Alternatively, the microphone **730** could be directed outward away from the user's head when the pair of eyeglasses are being worn. When a pair of eyeglasses associated with the temple **722** is being worn by a user, the ear bud **728** can be placed in or near the user's ear canal. The ear bud **728** contains a speaker and receives electrical signals via a wire of the cord **734**. The cord **734** can have another end (not shown) with a connector for coupling with an audio output device (e.g., radio, MP3 player) or a communication device (e.g., mobile phone).

FIGS. **8**A and **8**B are diagrams of a temple adapter **800** according to another embodiment of the invention. FIG. **8**A is a side view of the temple adapter **800**, and FIG. **8**B is a front view of the temple adapter **800**. The temple adapter **800** has a support body **802** which has a support arm **803**. An ear bud **804** is attached to an end of the support arm **803**. A connector **806**, such as a male audio connector, is attached to one end of the support body **802**. A microphone **808** can be optionally provided and attached to the support body **802** or the support arm **803**. Additionally, an elastic member **810** can be provided to facilitate attachment of the support body **802** to a temple **812** of a pair of eyeglasses. The temple **812** can have a tip region **814**, which can be referred to as a temple tip. When the temple adapter **800** is attached to the tip region **814** of the temple **812**, the tip region **814** is placed in or through an opening **816** in the elastic member **810**, as shown, for example, in FIG. **8**B. The temple adapter **800** is thereby held in place relative to the tip region **814**. Additionally, although not shown, the support body **802** would carry a first internal wire from the connector **806** to the microphone **808**, and the support body **802** and the support arm **803** would carry a second internal wire from the connector **806** to the ear bud **804**.

FIG. **9**A is a diagram of a temple adapter **900** according to another embodiment of the invention. In FIG. **9**A, a side-view of the temple adapter **900** is depicted. The temple adapter **900** attaches to a temple **902** of a pair of eyeglasses. The temple **902** can have a tip region **904**, which can be referred to as a temple tip. The temple adapter **900** has a support member **906**. A first end **908** of the support member **906** couples to the temple **902** of a pair of eyeglasses. In one embodiment, the first end **908** serves to attach the temple adapter **900** to the temple **902**. For example, the first end **908** can provide a clip, clamp, post, or hole to provide or assist with the attachment. As another example, the first end **908** can alternatively or additionally use an adhesive, bonding or fastener (e.g., hook and loop system, e.g., Velcro) to provide or assist with the attachment. A second end **910** of the support member **906** provides an opening through which an arm **912** extends. One end of the arm **912** has an ear bud **914** attached thereto. The arm **912** can be angled and/or malleable. When a pair of eyeglasses associated with the temple **902** is being worn by a user, the ear bud **914** can be placed in or near the user's ear canal. The ear bud **914** contains a speaker and receives electrical signals via a wire, such wire

can be provided internal or external to the temple adapter **900** and can originate at the temple **902** or external to the temple **902**.

FIGS. **9**B and **9**C are diagrams of a temple adapter **920** according to still another embodiment of the invention. FIG. **9**B is a side view of the temple adapter **920**, and FIG. **9**C is a front view of the temple adapter **920**. The temple adapter **920** attaches to a temple **922** of a pair of eyeglasses. The temple **922** can have a tip region **924**, which can be referred to as a temple tip. The temple adapter **920** has a support member **926**. A first end **928** of the support member **926** couples to the temple **922** of a pair of eyeglasses. In one embodiment, the first end **928** serves to attach the temple adapter **920** to the temple **922**. For example, the first end **928** can provide a clip, clamp, post, or hole to provide or assist with the attachment. As another example, the first end **928** can alternatively or additionally use an adhesive, bonding or fastener (e.g., hook and loop system, e.g., Velcro) to provide or assist with the attachment. The first end **928** also has a bracket **930** having a connector **932** at one end, and an elastic member **934** for coupling about the tip region **924**. The connector **932**, such as a male audio connector, is attached to one end of the bracket **930**. A microphone **936** can be optionally provided and, for example, attached to the support body **926**.

A second end **938** of the support member **926** provides an opening through which an arm **940** extends. One end of the arm **940** has an ear bud **942** attached thereto. The arm **940** can be angled and/or malleable. The arm **940** is also repositionable within the opening at the second end **938** so as to permit user adjustment. When a pair of eyeglasses associated with the temple **922** is being worn by a user, the ear bud **942** can be placed in or near the user's ear canal. The ear bud **942** contains a speaker and receives electrical signals via a wire, such wire can be provided internal or external to the temple adapter **920** and can originate at the temple **902** or external to the temple **902**. In this embodiment, a wire **944** is shown as passing through the arm **940** to provide signals to the speaker within the ear bud **942**. More particularly, in one embodiment, although not shown in FIGS. **9**B and **9**C, a first wire would connect the speaker within the ear bud **942** to the connector **932** (e.g., wire **944**), and a second wire would connect the microphone **936** to the connector **932**. Such wires can be internal or external, or partially internal and partially external, to the temple adapter **920**.

FIG. **9**D is a diagram of a temple adapter **960** according to still another embodiment of the invention. In FIG. **9**D, a side-view of the temple adapter **960** is depicted. The temple adapter **960** attaches to a temple **962** of a pair of eyeglasses. The temple **962** can have a tip region **964**, which can be referred to as a temple tip. The temple adapter **900** has a support member **966**. A first end **968** of the support member **966** couples to the temple **962** of a pair of eyeglasses. In one embodiment, the first end **968** serves to attach the temple adapter **960** to the temple **962**. For example, the first end **968** can provide a clip, clamp, post, or hole to provide or assist with the attachment. As another example, the first end **968** can alternatively or additionally use an adhesive, bonding or fastener (e.g., hook and loop system, e.g., Velcro) to provide or assist with the attachment. A second end **970** of the support member **906** provides an opening through which an arm **972** extends. One end of the arm **972** has an ear bud **974** attached thereto. The arm **972** can be angled and/or malleable. When a pair of eyeglasses associated with the temple **962** is being worn by a user, the ear bud **974** can be placed in or near the user's ear canal. The ear bud **974** contains a speaker and receives electrical signals via a wire, such wire can be provided internal or external to the temple adapter **960** and can originate at the temple **962** or external to the temple **962**. Further, the temple adapter **960** can include a microphone **976**. In this embodiment, the microphone **976** is attached to the support member **966**. In addition, an arm **978** is used to support an end of a cable **980** that is coupled to the arm **978**. The cable **980** can include at least one wire for the microphone **976** and one wire for the speaker within the ear bud **974**.

To the extent that any of the embodiments of the temple adapters discussed above use a microphone, a tube can be optionally attached to the microphone to facilitate voice pick-up of the user. One end of the tube can be placed over the microphone, and the other end of the tube is then positioned closer to the user's mouth than is the microphone. With a temple adapter on both temples, each providing a microphone and speaker to a pair of eyeglasses, only one temple adapter would typically make use of such a tube. Alternatively, the tube and the microphone could be replaced by a boom microphone.

FIG. **10**A-**10**C are diagrams of a temple having a bone conducting element according to still other embodiments of the invention. The bone conducting elements can replace a traditional speaker to provide audio output to a user. Although not shown, electrical signals would be internally or externally supplied to the bone conducting element.

FIG. **10**A illustrates a temple **1000** for a pair of eyeglasses. The temple **1000** includes a bone conducting element **1002** that can provide audio sound to a user by coupling vibrations to at least one bone of the user's face. The bone conducting element **1002** is held relative to the temple **1000** by an arm **1004**. Hence, in this embodiment, the temple **1000**, the arm **1004** and the bone conducting element **1002** can all be integrally formed.

FIG. **10**B illustrates a temple **1020** for a pair of eyeglasses. The temple **1020** includes a bone conducting element **1022** that can provide audio sound to a user by coupling vibrations to at least one bone of the user's face. The bone conducting element **1022** is held relative to the temple **1020** by a support **1024** that removably attaches to the temple **1020**.

FIG. **10**C illustrates a temple **1040** for a pair of eyeglasses. The temple **1040** includes a bone conducting element **1042** that can provide audio sound to a user by coupling vibrations to at least one bone of the user's head. In this embodiment, the bone conducting element **1042** is positioned in the vicinity of the user's ear, such as behind the user's ear. The placement of the bone conducting element **1042** in this embodiment can reduce impact to the design of the eyeglasses.

In one embodiment, the electrical components associated with a temple arrangement or a temple adapter is for enhancing the hearing of the person wearing the corresponding pair of glasses. There can be at least a microphone and a speaker in a temple arrangement or a temple adapter. The microphone can be close to an ear of the user when the glasses are worn by the user, and can be a directional microphone. The microphones can be a microphone in a temple adapter, such as the microphone **730** in FIG. **7**B, **808** in FIG. **8**A, **936** in FIG. **9**B, or **976** in FIG. **9**D. The microphones can be in a temple arrangement. The microphone in a temple arrangement can be attached to a temple tip, a temple fit-over or a temple cover. The microphones can be positioned to be in front of the user's ears so that the microphones will not be affected by the shadowing effect of the ears. The speaker can be inserted into the ear, as in some of the speakers previously described.

In another embodiment, there are two sets of microphones and speakers, such as in two temple arrangements or temple adapters. In the vicinity of each ear, there is a temple arrangement or temple adapter with its corresponding microphone and speaker. The microphones again can be directional, one pointing generally outwards in a position close to the left ear, and one pointing generally outwards in a position close to the right ear. Alternatively, the microphones can point forward.

The microphone and the speaker close to an ear do not have to be in very close proximity to each other, as in many hearing aids existing nowadays. They can be spaced apart by, such as, one to several inches, with the microphone being directional and pointing to the front and to either the left or the right of the user, and with the speaker pointing toward or inserted into the corresponding ear of the user. Such a distance apart can significantly reduce feedback effect of existing hearing aids. Another advantage of such a hearing enhancement device is that users may not need to be fitted into ears with ear molds. In any case, additional details on hearing enhancement are further described in the related applications that have been incorporated herein by reference, such as U.S. Provisional Patent Application No. 60/620,238, filed Oct. 18, 2004, and entitled "EYEGLASSES WITH HEARING ENHANCED AND OTHER AUDIO SIGNAL-GENERATING CAPABILITIES."

The various embodiments of the invention noted above, whether temple arrangement or temple adapter, can have a cable or cord attached or attachable thereto. The cable or cord has one or more conductors. The cable or cord can serve to provide electrical signals to or receive electrical signals from the temple arrangement or the temple adapter. In one embodiment, one end of a cable or cord attaches to a temple arrangement or temple adapter (either permanently or via a connector) and the other end of the cable or cord attaches (either permanently or via a connector) to an electronic device. As an example, the electronic device can be an audio output device (e.g., audio player) or a communication device (e.g., mobile telephone). In a first example, the cable or cord could provide a male audio (stereo) connector at one end, and a pair of female audio connectors at the opposite end, each being for use with a different temple. In a second example, the cable or cord could provide a set of connectors, such as a male mini-phone connector (2.5 mm) and a male audio (stereo) connector, at one end, and one or a pair of female phone connectors at the opposite end.

In one embodiment, the cable or cord can also have a switch coupled thereto so as to permit a user to switch modes. For example, if the temple arrangement or temple adapter provides a speaker and microphone to a pair of eyeglasses, a switch on a cable or cord that connects the temple arrangement or temple adapter to an electronic device could provide different switch positions for different electronic devices or different functional modes of operation of a single electronic device. As an example, if the electronic device is (or operates as) an audio player, a first switch position could be used. Alternatively, if the electronic device is (or operates as) a mobile telephone, a second switch position could be used. Additional discussion of suitable cables and cords is provided in the related applications that have been incorporated herein by reference.

Electrical components can form an electronic module. The electronic module can provide radiation monitoring, wireless communication, enhanced hearing, etc. A radiation monitoring system can be partially or fully contained in a temple arrangement or temple adapter associated with a temple of a pair of glasses. Typically, the temple arrangement or temple adapter can be removable from the temple.

In another embodiment, an electronic component in a temple arrangement or temple adapter interacts with another electronic component in another part (e.g., frame) of the glasses or in a device tethered to the glasses. For example, a temple of a pair of glasses holds one portion of an electronic circuit. That portion can include generic parts, such as a battery, that are applicable to different applications. Another portion of the electronic circuit is in a temple arrangement or temple adapter. This portion can be application specific, such as an electronic clock without a battery, or a temperature sensor.

In yet another embodiment, the electrical components can provide audio player capabilities. In such an embodiment, the electrical components can include audio file storage, an audio player and a battery. The electrical components may or may not include wireless communication circuitry.

Further, in an alternative embodiment, the output of an operation indicator can be audio. The audio output can be from one or more speakers associated with the frame of the eyeglasses. Such audio output can signal the user using natural language, voice synthesis, pre-recorded messages, etc.

In another embodiment, the electrical components can include a memory module. The memory module provides non-volatile data storage. For example, the memory module can be a portable (or removable) memory device (e.g., memory card). The memory module can, for example, store sensor information (which can be over an extended period of time). Such memory module can be remotely interrogated using wireless communication circuitry, or can be accessed through a wired connection with a tethered device.

In one embodiment, the electrical connection(s) can alternatively be used to allow information stored in the electrical components to be accessed or queried by a device. For example, when the electrical components include a memory module, the memory module can be accessed to read data (e.g., status information) stored therein.

As previously noted, the electrical components associated with a temple arrangement and/or a temple adapter can pertain to radiation monitoring circuitry. In such case, the electrical components within the temple arrangement or temple adapter alone or together with eyeglass electrical components can implement a radiation monitoring system. The radiation being monitored can, for example, pertain to one or more of UV, infrared and gamma radiation. In one embodiment, sunlight is considered as a type of radiation. In any case, additional details on radiation monitoring are further described in the related applications that have been incorporated herein by reference.

Also, the electrical components can pertain to health or fitness monitoring circuitry. In such case, the electrical components within the temple arrangement or the temple adapter alone or together with eyeglass electrical components can implement a health or fitness monitoring system. Additional details on health or fitness monitoring are further described in the related applications that have been incorporated herein by reference.

In yet another embodiment, an electronic component in a temple arrangement or a temple adapter of a frame of eyeglasses interacts with an electronic component of an apparatus tethered to the eyeglasses to perform an operation. For example, a temple arrangement or a temple adapter of a pair of eyeglasses holds one portion of an electronic system, and a tethered apparatus that tethers to the pair of eyeglasses includes another portion of the electronic system.

Power (e.g., external power source) can be coupled to the glasses through a connector. In one embodiment, a power source is embedded inside or inserted into the glasses. Different types of power sources are applicable. For example, the power source can be a battery, a fuel cell, a solar cell, or a rechargeable battery. The rechargeable battery can be charged through a connector at the glasses.

Depending on the embodiment, electrical components of a camera can be in a pair of glasses, and/or a base tethered to the glasses, and/or a portable device tethered to the glasses or to the base. For example, memory can be in the base tethered to the glasses. The location of a lens can vary depending on the embodiment. In one embodiment, one location is at the bridge of the glasses, with the lens of the camera facing forward. In this situation, what the user sees is substantially what the captured image would be. In other words, in a general sense, what the user sees is what the user gets. With such an embodiment, it is relatively easy for a user to take pictures, hands-free. In another embodiment, another location for the lens are at a side portion adjacent to a lens holder, before the joint of the corresponding temple. Again, the lens of the camera faces forward. Some of the electrical components of the camera can be in that location, and other components in the temple. These components can be electrically connected through one of the joints, such as with a flexible pc board. In yet another embodiment, the lens can face sideways and outwards in a temple of a pair of glasses, towards the left or right side of the user.

Still further, the invention can provide a new approach to marketing accessories, namely, electrical accessories, for eyewear. According to one method for providing temple arrangements and/or temple adapters for use with a pair of glasses, the method can initially provide a plurality of temple arrangements and/or temple adapters for a customer. This enables the customer to browse and select at least one temple arrangement or temple adapter. Each of the temple arrangements or temple adapters can have one or more electrical components at least partially embedded therein, with different temple arrangements or temple adapters providing different electrical capabilities. Once a temple arrangement or temple adapters has been selected, the selected temple arrangement or temple adapters can be coupled to one of the corresponding temples of the eyewear (e.g., a pair of glasses). In the case where the selected temple arrangement is a temple tip, the selected temple tip is inserted onto (e.g., slid over) an end of the corresponding temple (after removing any previously installed temple tip if there was one). In the case where the selected temple adapter is to be coupled, the selected temple adapter can be attached to the corresponding temple. Thereafter, the customer can make use of the eyewear with its associated electrical capabilities provided by the temple arrangement or temple adapters.

In one embodiment, once a temple arrangement and/or a temple adapter is provided to a customer, the customer can test the electrical capabilities of the pair of glasses. If the customer does not like the current selected temple arrangement or temple adapter, the customer can repeat the process by selecting and testing another temple arrangement or temple adapter. Before providing the eyewear with the temple arrangement or temple adapter, the customer can be required to pay a purchase (or rental) price for at least the temple arrangement or the temple adapter. Thereafter, the customer can be permitted to return and replace the temple arrangement or temple adapter with another temple arrangement or temple adapter. Such returns or replacements can be available only for a limited period of time following their purchase.

The eyewear can contain lenses, either vision corrective lenses or non-corrective lenses. Examples of eyewear using corrective lenses include, for example, prescription glasses, bi-focal glasses, reading glasses, driving glasses, and progressive glasses. Examples of eyewear, using corrective or non-corrective lenses, are sunglasses, fit-over glasses, safety glasses, sports glasses, swim masks or goggles and ski goggles. The eyewear can also include wrap-around glasses (with wrap-around lenses), fit-over glasses, or auxiliary frames (which attach to existing frames). Still further, the eyewear can include a strap for glasses, such as a strap to hold glasses on one's head. The strap can include some or all of the components for monitoring radiation, such components can be attached or at least partially embedded in the strap.

The invention can also relate to tethered electrical components for eyeglasses. According to a number of embodiments of the invention, an apparatus having one or more external electrical components can be tethered, through a tethering mechanism, to one or more electrical components within or attached to a pair of eyeglasses. The one or more external electrical components being tethered by the tethering mechanism, such as a cable or a cord, may be referred to herein as the 'tethered electrical components.' While the one or more electrical components in or attached to the glasses can be referred to herein as 'eyeglass electrical components.'

Tethered electrical components, alone or in combination with eyeglass electrical components can be used for a variety of different applications and uses. Examples of applications and uses include a wireless communication system, a radiation monitoring system, a health monitoring system or a fitness monitoring system. In one embodiment, the tethered electrical components can support wireless communication capabilities allowing a user to communicate with a communication device in a wireless and hands-free manner. In another embodiment, the tethered electrical components can support radiation monitoring such as for monitoring ultraviolet or solar radiation for a wearer of eyeglasses. In still other embodiments, the tethered electrical components can support health or fitness monitoring for a wearer of eyeglasses.

The tethered electrical components can support signal capturing, signal processing, signal transmission, data acquisition, data processing, and/or data storage. For example, the tethered electrical components can, for example, include a power source and/or an electronic controller. The tethered electrical components may also include and/or control one or more operation indicators to signal operational status of the tethered electrical components. In addition, the tethered electrical components may also include and/or control one or more sensors to monitor and/or signal conditions of users.

FIG. **11** is a perspective diagram of an apparatus **1100** having tethered electrical components according to one embodiment of the invention. The apparatus **1100** is capable of affixing to a pair of eyeglasses **1102**. The eyeglasses **1102** have a frame **1104** that supports a pair of lenses **1106**. The frame **1104** typically also includes a pair of arms **1108**. The arms **1108** are also known as temples. When the eyeglasses **1102** are being worn by a user, the arms **1108** are placed about the user's head and supported by the user's ears so as to stably hold the eyeglasses **1102** on the user's head.

In one embodiment, the apparatus **1100** include a base **1110** and at least one pair of cords **1112**. Typically, there is

a pair of cords **1112**. The base **1110** contains electrical components. The cords **1112** can couple to the base **1110** and can also couple to the arms **1108** of the eyeglasses **1102**. With the cords **1112** coupled to the arms **1108** of the glasses **1102**, the cords **1112** can also permit the eyeglasses **1102** to dangle about the user's neck. At least one of the cords **1112** contains an electrical conductor to carry electrical signals from the base **1110** and through the at least one of the cords **1112**. As shown in FIG. **11**, the cords **1112** can connect to the arms **1108** of the eyeglasses **1102**; hence, the electrical conductor can carry electrical signals between the base **1110** and at least one of the arms **1108** of the glasses **1102**. The electrical conductor could be a shielded conductive wire provided internal to at least one of the cords **1112**.

When referring to the cords **1112**, it should be understood that the cords can be (i) two separate cords that each extends from the base **1110** to one of the arms **1108** of the eyeglasses **1102** (see FIG. **11**), or (ii) a single cord that extends from the base **1110** and then separates into two ends that couple to the arms **1108** of the eyeglasses **1102**. The cords **1112** can be made of a variety of different materials and may contain at least one electrical conductor. For example, the cords **1112** can be made of plastic, string, fabric, wire, etc.

In one embodiment, instead of two separate pieces, the cords are connected together and form a continuous piece. The continuous piece can be a strap, like an electric strap. One example of a strap is a sports strap that snugly attaches eyeglasses to a user's head, often for sport activities. The two ends of the strap are coupled to the arms of the glasses. The coupling can be based on mechanical connectors (e.g., snaps, clips), part of which may be integral with the arms of the glasses, and the other part integral with the straps. The coupling can be on the temples, and located close to their corresponding lens holders.

In general, the cord(s) can also be referred to as a lanyard. In one embodiment, the base is removably attached to the cord(s). In another embodiment, the base can be integral with the cord(s).

The electrical components within the base **1110** can vary in different embodiments. In one embodiment, the electrical components pertain to wireless communication circuitry, an antenna and/or a battery. In another embodiment, the electrical component pertains to radiation monitoring circuitry. In still another embodiment, the electrical component pertains to health or fitness monitoring.

FIG. **12**A is a block diagram of electrical components **1200** according to one embodiment of the invention. The electrical components **1200** are, for example, suitable for use as the electrical components for the base **1110** of FIG. **11**. The electrical components **1200** include base electrical circuitry **1202** and a power source **1204**. The power source **1204** can, for example, be at least one battery (rechargeable or non-rechargeable) and/or at least one solar cell. In another embodiment, the power source is not in the base but instead in at least one of the cords, the eyeglass frame, or other electronic device that can electrically couple to the base. The base electrical circuitry **1202** varies with application and/or implementation. For example, the base electrical circuitry **1202** can include one or more of: controller, memory, communication interface, I/O port, sensor, output device (e.g., display), switch, and connector port.

The base electrical circuitry **1202** can also provide a link **1206** to other electrical circuitry in a wired or wireless manner. The wired interaction can utilize a cord coupled to an eyeglass frame, or can use a cable coupled to a portable electronic device. The wireless interaction can utilize different types of frequencies, such as radio frequencies, infrared frequencies or optical frequencies. The other electrical circuitry can, for example, be (i) within an eyeglass frame (e.g., coupled via a cord), (ii) worn by a user, (iii) within a portable electronic device (e.g., mobile telephone, media player, camera), or (iv) within a remote control device.

FIG. **12**B is a block diagram of electrical components **1250** according to one embodiment of the invention. The electrical components **1250** are, for example, suitable for use as the electrical components for the base **1110** of FIG. **11**. The electrical components **1250** can also represent one representative, more specific embodiment of the electrical components **1200** shown in FIG. **12**A wherein wireless communication is to be supported. The electrical components **1250** include a controller **1252**, a wireless communication interface **1254**, an antenna **1256**, and a battery **1258**. The controller **1252** can manage the overall operation of the electrical components **1250** and can output a speaker line **1260** and receive a microphone line **1262**. The speaker line **1260** and the microphone line **1262** can be provided through at least one of the cords **1112**. In one embodiment, at least one of the cords **1112** has a first electrical conductor that electrically connects to the speaker line **1260**, and a second electrical conductor that electrically connects to the microphone line **1262**.

The electrical components **1250** can further include a memory **1264** and an Input/Output (I/O) port **1266**. The memory **1264** can store data for various purposes, such as programs, user preferences, and other data. The memory **1264** can provide volatile (e.g., random access memory) or non-volatile (e.g., read-only memory, FLASH, etc.) data storage. The memory **1264** can be implemented as semiconductor chips or a disk drive. The memory **1264** can also be portable from the base **1110**, such as a memory card or removable disk drive. The I/O port **1266** enables the base to receive or send additional signals to/from the base. The additional signals can be sent or received in a wireless manner (e.g., infrared, radio frequency) or a wired manner (e.g., with the assistance of a conductor within at least one of the cords). These additional signals can be from a user or from other electrical devices. As one example, a switch or sensor could send data to the I/O port **1266**. The switch can be user activated and, more generally, pertains to a user input. The switch, for example, could be provided to enable the user to signal other electrical components. As another example, a remote control can wirelessly send data to the I/O port **1266** (e.g., to control some operation of at least some of the electrical components). As still another example, the I/O port **1266** can send data to an output device, such as a light source, display device, etc.

At least one of the cords can be just a piece of flexible conductor encapsulated by a flexible insulator. Typically, a cord includes a number of electrical wires or conductors. There can be one or more electrical components in the base, and there can also be one or more electrical components in the cords. The different types of connectors in different embodiments can be located in the base. In one embodiment, a power source is an electrical component in the base tethered to a pair of glasses. In another embodiment, the glasses are tethered to a base that has a connector. The connector is connected to and draws power from an external electronic device. In this embodiment, electrical components in the glasses draw power from the external electronic device.

FIG. **12**C shows an embodiment where a user **1270** is wearing a pair of glasses **1272**, which include electrical components, such as a speaker **1273**. There are also tethered electrical components in a base **1274**, which is connected to

the glasses **1272** through a cord **1276**. In addition, there is a wire **1278** (or cable) connected between a connector at the base **1274** and a connector at a portable electronic device **1280**. The portable device **1280** can be (a) a multimedia device, such as a MP3 player/recorder or a minidisk player, (b) a wireless communication device, such as a cell phone, or (c) a personal digital assistant, or other types of portable devices with computation, entertainment and/or communication capabilities.

In one embodiment, an attachment device **1282** is used to support the base **1274**, the electrical components in the base **1274** and/or the cord **1276**. For example, the attachment device **1282** can be a pin, clip or Velcro®, or other suitable mechanisms. The attachment device **1282** attaches at least a part of the base **1274** and/or the cord **1276** to the user's clothing. Alternatively or additionally, a similar attachment device can also serve to attach the wire **1278** to the user's clothing.

The cords **1112** as shown in FIG. **11** can couple to the frame **1104** of the eyeglasses **1102** in a variety of different ways. Additionally, one or more electrical components can be attached to or provided within the frame **1104** of the eyeglasses **1102**—the eyeglass electrical components. In one embodiment, the eyeglass electrical components include a speaker and/or a microphone. In another embodiment, the eyeglass electrical components include a display device and/or a sensor.

FIGS. **13**A-**13**D are diagrams of arrangements of a speaker and a microphone attached to an arm (i.e., temple) of a frame of a pair of eyeglasses according to a number of embodiments. In these arrangements, electrical components are attached to the eyeglasses so that the eyeglasses need not embed or otherwise include electrical components.

FIG. **13**A is a diagram of an arrangement **1300** of a cord **1306** and eyeglass electrical components according to one embodiment. The cord **1306** couples to an end portion **1304** of an arm **1302** of a pair of eyeglasses. In one embodiment, the end portion **1304** can pertain to a temple tip or some portion thereof. One end of the cord **1306** is electrically and mechanically coupled to eyeglass electrical components, such as a speaker **1308** and a microphone **1310**. The speaker **1308** and the microphone **1310** are also coupled to the end portion **1304** of the arm **1302**. When the cord **1306** is coupled to the end portion **1304** of the arm **1302**, the speaker **1308** and the microphone **1310** are also coupled against the end portion **1304** of the arm **1302**.

FIG. **13**B is a diagram of an arrangement **1320** of a cord **1322** and eyeglass electrical components according to one embodiment. The cord **1322** couples to the end portion **1304** of the arm **1302** of a pair of eyeglasses. The end portion of the cord **1322** is coupled to eyeglass electrical components via an extension **1324**. The eyeglass electrical components carried by the extension **1324** include, for example, a speaker **1326** and a microphone **1328**. The extension **1324** facilitates positioning of the speaker **1326** and the microphone **1328** relative to the pair of eyeglasses or its user.

FIG. **13**C is a diagram of an arrangement **1340** of a cord **1342** and eyeglass electrical components according to one embodiment. The cord **1342** couples to the end portion **1304** of the arm **1302** of a pair of eyeglasses. The end portion of the cord **1322** is coupled to eyeglass electrical components via an extension **1344**. The eyeglass electrical components carried by the extension **1344** include, for example, a speaker **1346** and a microphone **1348**. The extension **1344** facilitates positioning of the speaker **1346** and the microphone **1348** relative to the pair of eyeglasses or its user.

The arrangement **1340** is similar to the arrangement **1320** but the extension **1344** is positioned differently than the extension **1324**. It should be noted that that the extension **1324** illustrated in FIG. **13**B and/or the extension **1344** illustrated in FIG. **13**C can be rotatably attached to the end portion of the cord **1322**. In one embodiment, the extension **1324** illustrated in FIG. **13**B can rotate into the position of the extension **1344** illustrated in FIG. **13**C and vice versa.

FIG. **13**D is a diagram of an arrangement **1360** of a cord **1362** of eyeglass electrical components according to one embodiment. The cord **1362** has an elastic end **1364** that slides on an end portion of an arm **1302** of a pair of eyeglasses. Eyeglass electrical components, such as a speaker **1366** and a microphone **1368**, can be affixed or integral to the elastic end **1364**.

FIG. **13**E is a diagram of an arrangement **1370** of a speaker in a base that provides audio output in the vicinity of an arm of a frame of a pair of eyeglasses according to another embodiment. In particular, the arrangement **1370** illustrates a pair of eyeglasses **1372** having at least one lens **1374** and at least one arm **1376**. A base **1378** couples to the eyeglasses **1372** by way of a cord **1380**. The cord **1380** can be integral with the base **1378** or attachable to the base **1378**. The cord **1380** can attach to an end portion **1382** of the arm **1376**. The base **1378** includes an audio delivery system **1384**. The audio delivery system **1384** can, for example, pertain to a MP3 player, a RF receiver (e.g., a radio), or a mini-compact disc player. The audio delivery system **1384** outputs audio signals to a speaker **1386** which provides an audio output. The audio output from the speaker **1386** is directed by a funnel **1388** into a tube **1390** that extends from the funnel **1388** through the cord **1380**. At an end **1392** of the tube **1390**, the audio output is presented—namely, to a user of the eyeglasses **1372**. Note the tube **1390** exits the cord **1380** in the vicinity of its end that attached to the eyeglasses **1372**. As an example, the tube **1390** can be a plastic tube. At least the portion of the tube **1390** that is external to the cord **1380** can be malleable to allow user adjustment relative to the user's ear.

FIG. **14**A is a diagram of an arrangement **1400** of an arm **1402** of a frame of a pair of eyeglasses and a cord **1404** of an apparatus having tethered electrical components according to one embodiment. The cord **1404** has a loop **1406**. The loop **1406** can be used to secure the cord **1404** to the arm **1402**. For example, the loop **1406** can be elastic. The arm **1402** includes eyeglass electrical components, such as a speaker **1408** and a microphone **1410**, which are integral with the arm **1402**. In one embodiment, the speaker **1408** and the microphone **1410** are housed within the arm **1402**.

The cord **1404** contains at least one electrical conductor and the arm **1402** contains at least one electrical conductor. The securing of the cord **1404** to the arm **1402** not only physically secures the cord **1404** to the arm **1402** but also electrically connects the at least one electrical conductor within the cord **1404** to the at least one electrical conductor within the arm **1402**. In this manner, electrical components within a base (e.g., base **1110**) coupled to the cord **1404** can provide electrical signals to the speaker **1408** and the microphone **1410** within the arm **1402**.

FIG. **14**B is a diagram of an arrangement **1420** of an arm **1421** for a frame of a pair of eyeglasses according to one embodiment. According to this arrangement **1420**, the arm **1421** includes a connector port **1422**, a conductor **1424** (e.g., wire), a speaker **1426**, and a microphone **1428**. The speaker **1426** and the microphone **1428** are eyeglass electrical components. In the present invention, a conductor is not considered an electrical component if the conductor's sole

intended function is to provide electrical connections to two or more electrical components. As such, the conductor **1424** is not considered an electrical component. In one embodiment, a connector is also not considered an electrical component. The conductor **1424** is internal to the arm **1412**, and the speaker **1426** and the microphone **1428** may also be internal to the arm **1412**. The connector port **1422** can receive a counterpart connector connected to a cord (e.g., cord **1112**), thereby electrically coupling a conductor within the cord to the conductor **1424** within the arm **1421**. The arm **1421** can be used as a replacement arm so as to convert a standard pair of eyeglasses into a pair of eyeglasses that can exploit tethered electrical components, such as for wireless communications. In one implementation, the arm **1421** has a hinge portion **1430** to couple the arm **1421** to a frame of a pair of eyeglasses.

FIG. **14**C is a diagram of an arrangement **1440** of an arm **1441** for a frame of a pair of eyeglasses according to one embodiment. The arm **1441** is generally similar to the arm **1421** shown in FIG. **14**B, but further includes additional eyeglass electrical components, such as a light source **1442**. The light source **1442** can, for example, be a Light Emitting Diode (LED). The light source **1442** can provide ornamental lighting to the frame or can serve as an indicator light. The indicator light can provide various indications, such as, in use, operational status of electrical components, user's mood, user's health condition, etc. Optionally, the arrangement **1440** of the arm **1441** can also include an extension **1444** and/or an extension **1446**. The extension **1444** can be used to direct light from the light source **1442** to a different location. The extension **1444** can be rotatable, malleable or retractable (e.g., folding out). In one embodiment, the extension **1444** can be a light pipe. The extension **1446** (e.g., a boom arm) can move the microphone **1428** to an end **1448** of the extension **1446**, thereby closer to the mouth of the user. In another embodiment, the same extension **1444** or **1446** can include the light from the light source **1442** and the microphone **1428**.

FIG. **15**A is a diagram of a connection arrangement **1500** of an arm **1502** of a pair of eyeglasses and a cord **1506** according to one embodiment. The cord **1506** is used to tether electrical components to the eyeglasses. The arm **1502** includes a receptacle **1504** (i.e., counterpart connector) for receiving a connector **1508** connected to the cord **1506**. When the connector **1508** is engaged within the receptacle **1504**, the cord **1506** is physically and/or electrically connected to the arm **1502**. Alternatively, the cord **1506** can include the receptacle **1504** and the arm **1502** can include the connector **1508**.

FIG. **15**B is a diagram of a connection arrangement **1520** of an arm **1522** of a pair of eyeglasses and a cord **1524** according to another embodiment. The cord **1524** is used to tether electrical components to the eyeglasses. The arm **1522** has a connector **1526** at an end region. The cord **1524** contains a connector **1528** at an end. The connectors **1526** and **1528** can couple together (i.e., connector pair) to provide physical and/or electrical connections between the arm **1522** and the cord **1524**. In one implementation, the connector pair (connectors **1526** and **1528**) provide rotatable coupling of the cord **1524** to the arm **1522**. In one particular implementation, the connector pair can be a BNC or coaxial type connector.

FIG. **15**C is a side view of the connection arrangement **1520** of FIG. **15**B when the connector **1526** and the connector **1528** are coupled together. As a result, a conductor in the cord **1524** can be electrically coupled to an electrical component within the arm **1522**. In one implementation, the connector **1528** couples to the cord **1524** in a flexible or rotatable manner, so as to permit relative movement between the cord **1514** and the arm **1522** once the connector **1526** and the connector **1528** are coupled together. For example, the flexible or rotatable coupling can be achieved by a swivel joint at or near the connectors **1526** and **1528**.

FIG. **16** is a side view of an apparatus **1600** having electrical components tethered to another device (i.e., tethered electrical components) according to one embodiment of the invention. The apparatus **1600** has a base **1602**, a pair of cords **1604**, and a clip **1606**. The clip **1606** is affixed to the base **1602**. The base **1602** and the cords **1604** can represent any of the embodiments of the invention described herein. The clip **1606** is one embodiment of the attachment device **1282** discussed above with reference to FIG. **12**C.

The apparatus **1600** having the clip **1606**, as an example, can be used to hold the base **1602** against an article of clothing worn by the user. For instance, the article of clothing can be a shirt, sweater or jacket worn by the user. More specifically, the clip **1606** can hold the base **1602** to the collar of a shirt, sweater or jacket worn by the user. Alternatively, instead of a clip, the base **1602** can be held against an article of clothing by hook and loop technology (e.g., Velcro®), a pin, tape, a pocket, etc.

FIG. **17** is a side view of an apparatus **1700** having electrical components tethered to another device (i.e., tethered electrical components) according to another embodiment of the invention. The apparatus **1700** include a base **1702**, a pair of cords **1704**, and a ring **1706**. At least one of the cords **1704** can include at least one electrical connector. The ring **1706** can be used by a user of the apparatus **1700** to tighten the cords **1704** about the head of the user when the apparatus **1700** is attached to a pair of eyeglasses being worn by the user. The base **1702** and the cords **1704** can represent any of the embodiments described herein. In one embodiment, the base **1702** is integrally formed with the ring **1706**. In this embodiment, the base **1702** tends to be placed at the end of the cords **1704**. However, the base **1702** need not be positioned at the end of the cords **1704**. In still another embodiment, the base **1702** can include or connect to a ring, such that the base **1702** can slide along the cords **1704** as does a ring while maintaining connection with the at least one electrical connector of at least one of the cords **1704**.

FIG. **18** is a flow diagram of call processing **1800** using tethered wireless communication components according to one embodiment of the invention. The tethered wireless communication components interact with a communication device. The tethered wireless communication components can be the components within the base **1110** shown in FIG. **11**, such as the electrical components **1250** shown in FIG. **12**B. In this embodiment, the communication unit supports two-way communication, such as an audio conversation between two persons. For example, the communication unit can be a mobile telephone (e.g., cellular phone), a computer (desktop or portable), a cordless phone, a speaker phone, a voice-activated device, etc.

The call processing **1800** begins with a decision **1802** that determines whether a call is incoming. When the decision **1802** determines that a call is not incoming, then the call processing **1800** waits for such a call. Once the decision **1802** determines that a call is incoming, the decision **1804** determines whether tethered wireless communication components are present. When the decision **1804** determines that tethered wireless communication components are not present, then the incoming call is processed **1806** using conventional call handling. In this case, since tethered wireless communication components are not present, the communi-

cation unit proceeds to handle the call in a conventional manner without the benefit of tethered wireless communication components.

On the other hand, when the decision **1804** determines that tethered wireless communication components are present, then the tethered wireless communication components (tethered components) are activated **1808**. Here, the wireless communications capability of the tethered components is activated (e.g., powered-up, enabled, or woken-up). The user of the tethered components is then notified **1810** of the incoming call. In one embodiment, the notification to the user of the incoming call can be achieved by an audio sound produced by the tethered components and output by a speaker. The speaker is electrically coupled to the tethered components, e.g., such as in the various embodiments noted above. Alternatively, the user of the communication unit could be notified by a vibration of the tethered components, vibration of the frame of the eyeglasses or a base tethered to the glasses, or a visual (e.g., light) indication provided by the eyeglasses or the tethered components. Alternatively, the communication unit could include a ringer that provides audio sound and/or vibration indication to signal an incoming call. Still another alternative is that the tethered components or the frame of the eyeglasses could provide a tactile action to the user so as to notify the user.

Next, a decision **1812** determines whether the incoming call has been answered. When the decision **1812** determines that the incoming call has not been answered, the communication unit can activate **1814** a voice message informing the caller to leave a message or instructing the caller as to the unavailability of the recipient.

On the other hand, when the decision **1812** determines that the incoming call is to be answered, the call can be answered **1816** at the communication unit. Then, a wireless link is established **1818** from the wireless tethered components to the communication unit. The wireless link is, for example, a radio communication link such as utilized with Bluetooth or WiFi networks. Thereafter, communication information associated with the call can be exchanged **1820** over the wireless link. Here, the communication unit receives the incoming call, and communicates wirelessly with the tethered components such that communication information is provided to the user via the tethered components. The user is accordingly able to communicate with the caller by way of the tethered components and, thus, in a hands-free manner.

A decision **1822** then determines whether the call is over (completed). When the decision **1822** determines that the call is not over, the call processing **1800** returns to repeat the operation **1820** and subsequent operations so that the call can continue. On the other hand, when the decision **1822** determines that the call is over, then the tethered components are deactivated **1824**, and the wireless link and the call are ended **1826**. The deactivation **1824** of the tethered components can place the tethered components in a reduced-power mode. For example, the deactivation **1824** can power-down, disable, or sleep the wireless communication capabilities (e.g., circuitry) of the tethered components. Following the operation **1826**, as well as following the operations **1806** and **1814**, the call processing **1800** for the particular call ends.

Although the communication unit utilized with the call processing performs two-way communications, other embodiments of the invention can utilize one-way communications (or at least substantially one-way communications). For example, a communication unit might produce, receive or play audio content such that the audio content is transmitted to the tethered components in a wireless manner. The tethered components then serve as a receiver for the audio content transmitted from the communication unit.

In one embodiment, the communication unit can be a communication device with which tethered components can communicate. The communication unit outputs audio to the tethered components in a wireless manner.

In another embodiment, the communication unit can also be incorporated into the tethered communication components. For example, the tethered components can functionally operate as a two-way communication device (e.g., a mobile telephone). Such tethered components (e.g., communication components) can then, for example, operate as a mobile telephone, and may operate through use of voice-activated commands.

FIG. **19** is a flow diagram of operational condition processing **1900** according to one embodiment of the invention. The operational condition processing **1900** can, for example, be performed by an apparatus having at least one operation indicator as well as tethered electrical components and/or eyeglass electrical components for a pair of eyeglasses.

The operational condition processing **1900** initially determines **1902** an operational condition of the electrical components (e.g., tethered electrical components and/or the corresponding eyeglass electrical components). The operational condition can, for example, indicate whether a call is incoming, whether a call is ongoing, or whether the electrical component is in use. Next, at least one operation indicator of the electrical components is controlled **1904** based on the determined operational condition. The operation indicator can, for example, be a light source (e.g., light emitting diode). The at least one operation indicator can be positioned at a variety of different places of the eyeglasses or the tethered electrical components. In one embodiment, the tethered electrical components are tethered wireless communication components, and the operation indicator serves as an indicator to others that the user of the tethered electrical components is engaged in a call. In another embodiment, the indicator can signal to the wearer of the tethered electrical components that a call is incoming. Following the operation **1904**, the operational condition processing **1900** is complete and ends.

FIG. **20** is a flow diagram of sensor processing **2000** according to one embodiment of the invention. The sensor processing **2000** can, for example, be performed by an apparatus having at least one sensor as well as tethered electrical components and/or eyeglass electrical components for a pair of eyeglasses. Optionally, the electrical components further include at least one operation indicator.

The sensor processing **2000** initially receives **2002** sensor information from the sensor. The sensor information is typically associated with the user of the eyeglasses. There can be different types of sensors. The sensors can be considered either eyeglass electrical components or tethered electrical components. For example, the sensor can be a temperature sensor configured to sense the temperature of the user. The sensor can be a humidity sensor configured to sense how much the user has been perspiring. The sensor can sense whether at least one of the user's eyes is open or not. The sensor can sense if the user is crying. The sensor can sense the direction the user is looking. In a general sense, the sensor information can, for example, pertain to physical and/or emotional conditions of the user.

At least one indicator can then be controlled **2004** based on the sensor information. The indicator can be considered either eyeglass electrical components or tethered electrical components. The indicator can, for example, be a light

source or a liquid crystal display. Following the operation **2004**, the sensor processing **2000** is complete and ends.

The indication provided by the indicator can serve various other purposes. As an example, the indication can represent physical or emotional status of the user of the eyeglasses or the tethered electrical components. For example, the indication can provide an indication of the health or mood of the user of the eyeglasses or the tethered electrical components (e.g., by use of different colored light).

Although the at least one sensor for acquiring the sensor information can be an eyeglass electrical component or a tethered electrical component, it should be noted that the sensor could also be remotely located from the eyeglasses or tethered electrical components, and could also communicate therewith in a wired or wireless manner. Wireless sensors can increase the type of sensor information that can be acquired and utilized.

In one embodiment, the sensor can be a position sensor that provides position information. The position sensor can, for example, be a GPS receiver that is able to fully or partially determine the position of the eyeglasses or its user. The position sensor can be integral with the tethered electrical components and thus, for example, provided in a base portion (e.g., base **1110**). Alternatively, the position sensor can be provided within the frame (e.g., arm) of the eyeglasses as an eyeglass electrical component.

In one embodiment, the cord is a strap, such as an elastic strap. The strap can include or support one or more electrical components, such as a speaker or a microphone. In another embodiment, all of the electrical components are in or supported by the strap. In yet another embodiment, the strap includes at least one electrical connector to allow electrical components in or supported by the strap to couple to additional electrical components, such as in a base.

In another embodiment, the tethered electrical components can further include a memory module. The memory module can provide non-volatile data storage. For example, the memory module can be a portable (or removable) memory device (e.g., memory card). In one implementation, a base portion (e.g., base **1110**) of a tethered apparatus can receive the memory module through, for example, a connector at the tethered apparatus. The memory module can, for example, store the sensor information, which can be over an extended period of time. Such memory module can be remotely interrogated using wireless communication circuitry, or can be accessed through a wired connection with tethered electrical components.

In yet another embodiment, tethered electrical components can further provide audio player capabilities. In such an embodiment, a base portion (e.g., base **1110**) of a tethered apparatus can include an audio player and a battery. The base portion may or may not include wireless communication circuitry. The base portion can also include an audio file storage. The base can couple to one or more speakers through at least one cord.

Further, in an alternative embodiment, the output of an operation indicator (e.g., used with the sensor processing **2000**) can be audio that is output to the one or more speakers associated with the tethered apparatus. Such audio output can signal the user using natural language, voice synthesis, pre-recorded messages, one or more audio beeps, etc.

In another embodiment, one or more electrical connections on a base portion (e.g., base **1110**) of the tethered apparatus facilitate electrical connection with a battery charger. For example, when the power source for the tethered apparatus is a rechargeable battery, the ability to charge the battery without removing the battery from the base portion of the tethered apparatus is advantageous. Hence, in one embodiment, the base portion of the tethered apparatus includes at least one connector or conductive element (e.g., terminal, pin, pad, trace, etc.) so that electrical coupling between the rechargeable battery and the charger can be achieved. In this regard, the electrical connector or conductive element is provided on the base portion of the tethered apparatus and is electrically connected to the battery. In one embodiment, the placement of the electrical connector or conductive element on the base portion serves to allow the tethered apparatus to be placed within a charger and consequently have the electrical connector or conductive element be in electrical contact with a counterpart or corresponding electrical connector or conductive element of the charger. In another embodiment, the base portion can have a port that can couple (e.g., via a cable) with an Input/Output (I/O) port (e.g., USB port) of a computing device (e.g., computer) so as to provide power to charge the battery.

In still another embodiment, the charger can be considered a docking station, upon which the tethered apparatus or the eyeglasses is docked so that the battery within the tethered apparatus or the eyeglasses is able to be charged. Hence, the housing of the tethered apparatus or the eyeglasses can likewise include an electrical connector or conductive element that facilitates electrical connection to the docking station when docked.

In one embodiment, the electrical connection(s) can alternatively be used to allow information stored in the tethered electrical components or eyeglasses to be accessed or queried by a device. For example, when the tethered electrical components include a memory module, the memory module can be accessed to read data (e.g., status information) stored therein.

In yet still another embodiment, a base portion (e.g., base **1110**) of the tethered apparatus can serve merely as a battery source for eyeglass electrical components. In other words, in this embodiment, the base need not include other types of circuitries such as wireless communication circuitry. In such an embodiment, the size of the base can be largely dependent on the battery size.

The tethered apparatus may be provided with an illuminated or transparent appearance. For example, at least a portion of the base and/or cords can be illuminated or substantially transparent. This can provide not only a unique design appearance but can also facilitate lighting of the tethered apparatus. For example, operation indicators that are light sources, can be completely internal to the base and/or cords and produce light in complex shapes, patterns, etc. through light pipes, fiber optics, LEDs, etc. Further, the tethered electrical components and/or eyeglass electrical components can have numerous light sources to display patterns, and the patterns can coordinate or be synchronous with audio sounds, etc.

In one embodiment the tethered apparatus can further include a solar panel. The solar panel has one or more solar cells that convert light into energy so as to power the electrical components and/or charge the battery for the tethered apparatus or the glasses.

In one embodiment, the eyeglass electrical components can include a switch or a Radio Frequency Identifier (RFID) element.

As previously noted, a base portion (e.g., base **1110**) of the tethered apparatus can have electrical components pertaining to radiation monitoring circuitry. In such case, the electrical components within the base portion alone or together with eyeglass electrical components can implement a radiation monitoring system. The radiation being moni-

tored can, for example, pertain to one or more of UV, infrared and gamma radiation. In one embodiment, sunlight is considered as a type of radiation. In any case, additional details on radiation monitoring are further described in the related applications that have been incorporated herein by reference.

Also, as previously noted, a base portion (e.g., base **1110**) of the tethered apparatus can include electrical components pertaining to health or fitness monitoring circuitry. In such case, the electrical components within the base portion alone or together with eyeglass electrical components can implement a health or fitness monitoring system. Additional details on health or fitness monitoring are further described in the related applications that have been incorporated herein by reference.

In yet another embodiment, an electronic component in a temple arrangement of a frame of eyeglasses interacts with an electronic component of a tethered apparatus. For example, a temple arrangement of a pair of eyeglasses holds one portion of an electronic system, and a tethered apparatus that tethers to the pair of eyeglasses includes another portion of the electronic system. In one embodiment, a temple arrangement can be a temple tip, which is usually an enclosure that grabs onto the temple. In another embodiment, a temple arrangement is a temple cover or a temple fit-over. A temple cover slides over and at least partially covers a portion of a temple. If the end of the temple has a temple tip, at least a portion of the temple tip can be covered by the temple cover. A temple fit-over fits over at least a portion of the end of a temple. If the end of the temple has a temple tip, at least a portion of the temple tip is fitted over by the temple fit-over. A temple cover is typically made of a material that is more flexible than a temple fit-over. For example, a temple cover can be a fabric or other materials, such as a sock or sleeve; while a temple fit-over can be made of plastic.

For some glasses, particularly when a pair of glasses has not been extensively worn, a temple arrangement, such as a temple tip, can be relatively easily removed and re-inserted into the glasses. This implies that temple arrangements of different color and/or shape and/or having different electronic components can be applied to the same frame of a pair of glasses. Retailers or distributors can then provide after-market modification or enhancement to a pair of glasses, at the preference of their consumers. This, for example, can be done by replacing existing temple tips with replacement temple tips. Or, a consumer can identify the preferred temple arrangements to be purchased with the glasses.

The advantages of the invention are numerous. Different embodiments or implementations may yield one or more of the following advantages. One advantage of the invention is that electrical components can be provided integral with or attached to a temple arrangement or a temple adapter for use with a pair of eyeglasses. Another advantage of the invention is that after-market changes to electrical capabilities of eyeglasses can be relatively easily achieved Another advantage of the invention is that communication, computation, information capturing or sensing, and/or operational capabilities can be provided for eyeglasses without substantial interference to style or design choices of the glasses. Still another advantage of the invention is that wireless communications, radiation monitoring, fitness monitoring and/or health monitoring can be supported by the electrical components. Yet another advantage of the invention is the ability to provide hands-free wireless communications capability. Moreover, another advantage of the invention is that electrical components can be separated into two areas, one integral or attached to a pair of eyeglasses, and the other tethered to the pair of eyeglasses. Different components can be positioned in different areas depending on applications and/or aesthetical reasons. For example, power sources can be placed away from but tethered to the eyeglasses to reduce the weight of the eyeglasses. Another advantage of the invention is that additional functionality can be added to eyewear that a user already owns. Another advantage is that additional functionality can be added to eyewear when desired. Another advantage of the invention is the ability to provide hands-free wireless communications capability. Yet another advantage of the invention is that wireless communications, radiation monitoring, fitness monitoring and/or health monitoring can be supported by tethered electrical components. Still another advantage of the invention is that communication, computation, information capturing or sensing, and/or operational capabilities can be provided for eyeglasses without substantial interference to style or design choices, and thus without being apparent that the eyeglasses support such capabilities. Yet another advantage of the invention is that one or more operation indicators can be provided (as tethered electrical components or on or with eyeglasses) for functional reasons (e.g., to indicate operational condition of circuitry or to indicate condition of user), and/or for ornamental purposes also, such as light patterns. Still yet another advantage of the invention is that tethered electrical components for eyeglasses can also include one or more sensors, and can provide storage capabilities for sensor information.

A number of embodiments according to the present invention regarding glasses with one or more electrical component partially or fully embedded, will be described. Many of them are applicable to different types of glasses, such as sunglasses, auxiliary frames, fit-over glasses, prescription glasses, safety glasses, swim masks, and goggles, such as ski goggles. In a number of embodiments, the frames of the glasses have more surface area than frames with minimal structure. For example, the temple regions of the glasses can have a taper profile. They are wider or broader when they are closer to the lens holders. Then they get narrower. In one embodiment, a wider or broader temple implies that the temple spans across a wider or broader area longitudinally down from the top of the head of the user. FIG. **21** shows an example of such an embodiment.

FIG. **21** shows one embodiment **2100** of the invention where there is a speaker **2102** at least partially embedded in one of the temples **2104** of the glasses **2106**. The speaker **2102** is closer to one end of the temple **104** than the other end. The end of the temple that the speaker **2102** is closer to is the end that is in the vicinity of the lens holder or the hinge of the glasses **2106**, instead of the end **2108** that is free. The speaker can be partially embedded in the glasses. For example, the mouth of the speaker, where sometimes there can be small holes on a cover, can be exposed.

In the embodiment shown in FIG. **21**, the speaker **2102** outputs audio signals in the direction towards the user. In another embodiment, the speaker **2102** outputs audio signals in the direction away from the user. For example, the mouth of the speaker **2102** can be facing outwards away from the user.

There are different approaches to embed an electrical component into a pair of glasses. For example, the glasses can be made of plastic (e.g., plastic frames). One way to produce such frames is to first assemble electrical components onto a circuit board. The circuit board can be shaped to fit, for example, the temple of the glasses. The circuit board is placed into a mold. Then, hot, molten plastic is

injected around the circuit board to form the temple piece of the glasses. To reduce weight, the wall of the glasses can be made relatively thin through injection molding techniques.

In another embodiment, the glasses have metallic frames. For example, the frames can be made of Titanium, which is a relatively light metal. Also, Titanium is relatively non-conductive and strong, and is quite immune to corrosion. Further, Titanium can be anodized or heat colored.

For glasses with metallic frames, to prevent circuits from being shorted or to reduce leakage current, one embodiment provides an insulating layer between the electrical components or circuit board and the metallic frames. One example of an insulting layer is a tape to encapsulate the electrical components. The tape is non-conducting so as to provide insulation and, to a certain degree, can also provide mechanical stiffness. One way to make such temples is to have two sheets of the metal die-stamped to form the two halves, or the two faces of the temple piece. A circuit board is made to fit into the space between the faces. Then, two die-cut pieces of insulator material (e.g., dielectric tape) can cover the top and the bottom surfaces of the circuit board. The board is then sandwiched between the faces to form the temple. In one example, the dielectric tape can be double-sided sticky tape, with one side sticking to the circuit board, and the other side sticking to the temple. An adhesive can be used to glue the two faces of the temple piece together.

In yet another embodiment, the frames are made of hard rubber. The frames can be manufactured in an approach similar to injection molding techniques, with circuit boards inserted into the mold along with the rubber at the time of molding.

Different types of speakers can be used, such as, standard, fixed-magnet/moving coil speakers; speakers with fixed-coil and a steel diaphragm; piezoelectric speakers; and electrostatic speakers.

In one embodiment, the glasses further include a tube, such as a plastic tube, extending from a speaker. The tube serves to guide sound generated by the speaker to one of the ears of the user. FIG. **22** shows an embodiment where a tube **2150** is located on the outside of a temple **2152**. In another embodiment, the tube can be on the inside of a temple.

In one embodiment, the tube **2150** can be rotated, such as from behind the temple **2152** (if the tube is on the inside of the temple) to being downward at an angle towards one of the ears of the user, such as the position shown in FIG. **22**. To increase flexibility, the tube can be attached to a rotating disk **2154**, which allows rotation about the speaker.

In another embodiment, the tube is malleable. This allows the tube to be placed in different positions.

In one embodiment, the length of the tube is adjustable. FIG. **23** shows such an embodiment **2200** of a pair of glasses with a retractable tube **2202**. In the figure, the tube is shown to be in its extended position.

To further enhance sound coupling, in one approach, there is a plug **2156** at the end of the tube for inserting into an ear of the user. The plug can be an ear bud. The plug can provide a cushion, foam rubber or other materials. Such materials give comfort and/or enhance sound coupling to the ear canal.

In another approach, there is a funnel at the output of the speaker. FIG. **24** shows the cross section of such a funnel from a speaker at a temple region of the glasses. As shown in FIG. **24**, the speaker **2254** sits on a speaker frame **2252**, and the speaker **2254** is electrically connected to a circuit board **2256**. As sound is generated from the speaker **2254**, the sound propagates to a tube **2258** through a structure **2260** in the shape of a funnel. Such a structure helps guide the sound to the tube (i.e., improved sound coupling). Also, FIG. **24** shows the tube, which can be the tube **2150** shown in FIG. **22**, mounted onto the temple region of the glasses with a circular lip **2262**. Such a lip **2262** allows the tube **2258** to rotate relative to the glasses. In the embodiment shown in FIG. **24**, the speaker **2254** is fully embedded in the glasses.

As an alternative to or in conjunction with the tube, the glasses can include a channel to likewise guide sound generated by the speaker to one of the ears of the user. For example, the channel can be formed within a temple. The temple also has an opening to output the sound towards the user's ear.

FIG. **21** shows one speaker at one of the temples. There can be more than one speaker at each temple. In one embodiment, there can also be at least one speaker at each temple. The two speakers can generate stereo effects.

In another embodiment, the glasses can provide four or more speakers to give a high fidelity sound or a surround sound effect. For example, each temple can include one speaker in front of the user's ear, and one speaker behind the user's ear. The different speakers can generate different portions or sections of the sound. Further, if a base (discussed below) or portable electronic device is coupled to the glasses, the base or portable electronic device can contain another speaker, such as a base or woofer speaker. Such embodiments enable the glasses to provide a personal high-fidelity sound or a surround-sound environment.

Electrical signals can be coupled to an electrical component, such as a speaker, in a pair of glasses through a number of mechanisms. In one embodiment, there is an electrical connector at least partially embedded in the glasses. In other words, at least a portion of the connector is inside the glasses. The connector is electrically coupled to the speaker (or other electrical component) by, for example, a conductor. The conductor can be on a printed-circuit board. In one embodiment, the conductor is also embedded in the glasses.

Regarding connectors, FIG. **25** shows one embodiment where the connector is not a standard connector. The end **2108** of the temple **2104** of the glasses **2106** shown in FIG. **21** has a similar connector. In FIG. **25**, the connector is a male plug or a male connector **2300** at the end of a temple **2302** of a pair of glasses. The connector **2300** is connected to the speaker through, for example, one or more wires embedded in the temple. Electrical signals external to the glasses can then be coupled to the speaker (or other electrical component) through the plug.

As shown in FIG. **25**, the free end of the temple **2302** can have a relatively flat cross section. There can be one or more electrically-conductive contacts, such as **2304** and **2306**, on one or both of the flat surfaces of the temple. In FIG. **25**, four contacts are shown on one surface of the temple. The contacts, **2304** and **2306**, can be metal pads or bumps.

In one embodiment, a non-standard connector can be made using printed-circuit board technologies. First, a printed-circuit board with printed conductors connected to metal contact bumps is produced. Then plastic is overmolded around the printed-circuit board, with the mold designed to shut off around the bumps or pads. The overmolded plastic can serve as the temple, and the pads would be left exposed. Thus, portions of the printed circuit board are covered by plastic, and areas with the bumps or pads are exposed for connection. These pads serve as the connectors for the glasses.

Regarding printed-circuit boards, there can be one or more circuit boards in the glasses. For example, there can be a circuit board in one of the temples of the glasses. Or, the circuits can be divided into two circuit boards, one in each

temple of the glasses. The circuit boards can carry additional electrical components to be described below.

In one embodiment, the circuit boards are rigid. In another embodiment, the circuit boards are made of flexible materials, such as a polyimide sheet, like Kapton®. In one embodiment, the circuit board is configured or adapts to the shape of the temple in which it resides.

As shown in FIG. **25**, the end of the temple **2302** serves as a male connector (plug) **2300**. The non-standard male connector **2300** can be received by a non-standard female connector (plug) **2310**. Typically, the female connector **2310** makes electrical and physical connection through grabbing around the male plug. The female connector **2310** can be connected to a cable **2312**.

FIGS. **26**A-**26**B illustrate a process to make the non-standard female plug **2310**. First, an electrical wire **2354** is attached to a small sheet or piece of metal **2356**. FIG. **26**A shows a number of such wires, with a number of the metal sheets or pieces crimped to a hard PVC **2358**. The figure shows the back side of the crimped board with the wires and with a number of holes, such as **2360**. Then the frame is overmolded with a soft PVC. FIG. **26**B shows a cross section of the overmolded frame **2362** with the soft PVC. As shown in the figure, a number of the metal sheets, such as **2364** and **2366**, are exposed. They are the metal contacts in the female connector **2310**. Instead of the above approach, alternatively, a wire can be attached to a sheet of metal by putting the wire between the metal and the plastic as the metal is crimped onto a plastic. When the temple (i.e., male connector **2300**) is inserted into the female plug, the soft PVC material stretches slightly, providing a spring-force to keep the contacts connected.

The hard PVC can have a hardness of over 80 durometer, while the soft PVC can have a hardness of less than 50 durometer. The hard PVC can be replaced by other materials, such as Polypropylene or cloth. The soft PVC can be replaced by Silicone, or a thermo-plastic elastomer, such as Kraton®.

Referring to both FIG. **25** and FIG. **26**B, when the male connector **2300** is inserted into the slot **2314** of the female connector **2310**, the metal pads, **2304** and **2306**, will get in contact, or mate, with the metal sheets, **2364** and **2366**.

In one embodiment, as long as the male connector **2300** is pushed all the way into the female connector **2310**, the pads are aligned correctly to the sheets for electrical connections. In another embodiment, there is an alignment mechanism to guide the position of the temple relative to the female connector so as to ensure the conductive sheets to be in contact with the conductive pads. For example, there can be a registration location to indicate that the male connector is at the appropriate position relative to the female connector. There can be an alignment extension, which can be a partial sphere, close to the end of the temple **2302**, such as between the pads **2304** and **2306**, at **2316**. And, there can be a corresponding alignment notch at the female connector **2310**. When the extension is received or caught by the notch, the male connector **2300** is in the appropriate position relative to the female connector **2310**. In other words, the alignment is proper, and the pads and the sheets are in contact.

FIG. **25** shows the non-standard male connector **2300** at one end of a temple of a pair of glasses. In yet another embodiment, a non-standard connector can be at another location. FIG. **27** shows another example of a non-standard connector **2400**. The connector **2400** includes one or more conductive pads, **2412** and **2414**, on the top side of a temple **2402**. The connector **2400** is designed to receive another connector **2406** that grabs onto the side of the temple **2402**. There can be an indentation **2404** on the temple **2402** to receive the other connector **2406**. The other connector **2406** can include a top **2420** and a bottom **2416** clip. There are a number of conductive pads or sheets inside the other connector **2406**. The indentation **2404** provides an alignment to indicate where the top clip **2420** of the other connector **2406** should grab onto the temple **2402** for connection. At that position, the conductive pads at the temple will be in contact with the conductive pads or sheets at the other connector **2406**. There can also be another indentation **2418** at the temple **2402** to receive the bottom clip **2416**. This can further enhance the alignment process and to secure the connection.

In FIG. **27**, the other connector **2406** is coupled to one end of a cord and a plug **2408**, which can be inserted into a portable device **2410**, can be connected to another end of the cord. The portable device, for example, can be a cell phone. This type of non-standard clip-type connector could be easily applied to the temple with one hand, for example, while the user is driving a car.

A number of non-standard connectors have been described. In another embodiment, the contacts are based on standard connectors, which can be off-the-shelf connectors. FIGS. **28**A-**28**E show a number of examples of such connectors.

In one embodiment, the standard connector is a standard cylindrical plug located at the end of a temple. From a different perspective, the temple molds around the end of the plug. FIG. **28**A shows one such embodiment. The plug **2450** can be a standard audio connector or a 3-wire or three terminal plug, such as a 3.5 mm male stereo mini-phone plug. The 3 wires for such a plug are typically one for ground, the other two applicable for two signals, such as for creating stereo effects. FIG. **28**A also shows the three wires, **2452**, **2454** and **2456**, inside the temple, extended from the plug **2450**. These wires are for connection to electrical components of the glasses.

In one embodiment, the cylindrical plug **2450** shown in FIG. **28**A can be protected, encapsulated or shrouded. Or, at least a portion of the plug is protected, encapsulated or shrouded. Such protection can, for example, be for esthetic reasons, or to prevent the plug from scratching the face of the user when the user is putting on the pair of glasses. In FIG. **28**A, the plug **2450** is partially embedded in a temple.

Instead of a three terminal plug, other types of standard cylindrical plugs applicable to different embodiments of the present invention include a serial connector with 3 pins, typically one for ground, one for transmitting data (Tx) and the third for receiving data (Rx); or (b) a 2-wire connector, one served as ground, the other for carrying, such as power and modulated signals.

In yet another embodiment, instead of a cylindrical plug, the standard connector at the end of a temple of a pair of glasses is a USB or a FIREWIRE connector.

A number of embodiments have been described where the standard connector(s) at the glasses are male connectors. In yet another embodiment, the standard connector(s) in the glasses are female connectors. For example, there can be a 3.5 mm female stereo mini-phone plug at the end of a temple of a pair of glasses. At least a portion of the female connector can be protected, encapsulated or shrouded. For example, the female connector can be recessed within the end of a temple.

FIGS. **28**B-**28**E show different examples of standard connectors located or partially embedded not at the end of a temple of a pair of glasses, but, for example, on the side of

the temple, such as on the inside surface or the outside surface of a temple. FIG. **28**B shows a 0.10" header plug **2460**, commonly known as a MOLEX connector, on such a surface. FIG. **28**C shows a female mini-phone plug **2465** on such a surface. FIG. **28**D shows a card connector **2470** to receive a card **2472**, such as a removable media card (e.g., memory card). There can be a cover **2474** to secure and/or protect the media card **2472** in place after it is inserted into the card connector **2470**. FIG. **28**E shows a female USB connector **2480** on the inside surface of a temple **2482** to receive a male USB connector **2484**.

FIGS. **28**F-**28**H are diagrams pertaining to providing a removable electronic device with an eyeglass frame according to one embodiment of the invention. FIG. **28**F illustrates a temple **2490** that includes a connector **2492**. The connector **2492** includes an opening **2494**. A removable electronic device can be coupled to the temple **2490** using the connector **2492**. More particularly, FIG. **28**G illustrates a removable electronic device **2496** that includes an electronic device housing **2498** and a connector **2499**. As an example, the removable electronic device **2496** can be a memory storage device, sometimes referred to as a memory card. FIG. **28**H illustrates the removable electronic device **2496** coupled to the temple **2490**. The removable electronic device **2496** is coupled to one side of the temple **2490**, such side can be either an inside or outside surface of the eyeglass frame. When the removable electronic device **2496** is coupled to the temple **2490**, the connector **2499** of the removable electronic device **2496** is inserted into the opening **2494** of the connector **2492**. Physical forces between the connector **2499** and the connector **2492** operate to secure the removable electronic device **2496** to the temple **2490**, yet permit the removable electronic device **2496** to be removable therefrom.

In one embodiment, the connector **2492** is not electrically connected to any electronic circuitry within the temple **2490** or other parts of the eyeglass frame. In other words, the connector **2492** provides a convenient means by which removable electronic devices can be coupled to the eyeglass frame. In another embodiment, the connector **2492** can be coupled to electrical circuitry within the temple **2490** or elsewhere within the eyeglass frame. Such an embodiment allows the electronic components within the removable electronic device **2496** to be utilized with the electrical circuitry within the temple **2490** or elsewhere within the eyeglass frame. For example, the removable electronic device **2496** can provide data storage and/or other software modules to be utilized by or to utilize the other electrical circuitry within the temple **2490** or elsewhere within the eyeglass frame. In any case, by attaching the removable electronic device **2496** to the temple **2490** (and thus the eyeglass frame), the removable electronic device **2496** is able to be conveniently carried by the user of the eyeglass frame. In one implementation, the eyeglass frame, which includes the connector **2492**, becomes a docking station for the removable electronic device **2496**. As such, a variety of different removable electronic devices can be interconnected with the eyeglass frame, as desired. For example, the eyeglass frame can thus support different function or operations depending on the removable electronic device that is attached. For example, the eyeglass frame might operate as a camera, data storage device, FM radio, MP3 player, mobile telephone, pedometer, hearing enhancer, sun sensor, time piece, etc.

In one embodiment, the removable electronic device **2496** can align itself with the orientation of the temple **2490**, such as shown in FIG. **28**H. In FIG. **28**G, the electronic device housing **2498** can be said to have an elongated housing. The configuration (e.g., shape) and/or color of the removable electronic device **2496** can also be designed to conform or complement the design of the temple **2490**. In one embodiment, the temple **2490** might also have a recessed region to allow the portable electronic device to be less visually perceptible when attached to the temple **2490** or to provide a more consistent contour of the temple **2490**.

In one embodiment, the connector **2499** is a male connector, and the connector **2492** is a female connector or a similarly sized structure. In one implementation the connector **2499** is a peripheral bus connector, such as a Universal Serial Bus (USB) connector. In such cases, the connector **2492** can also be a peripheral bus connector (either electrically functional or non-functional as noted above).

Although the embodiment illustrated in FIGS. **28**F-**28**H utilize connectors, namely, electrical connectors, the removable electronic device **2496** could be attached to the temple in other ways. For example, other means to provide physical forces to hold the removable electronic device **2496** in place can be used.

FIG. **28**I is a diagram of a temple of an eyeglass frame according to another embodiment of the invention. In this embodiment, the temple **2490'** includes an opening **2491** through which a cable **2493** extends outward. The cable **2493** has an electrical connector **2495** connected at its end. The electrical connector **2495** is electrically connected to electrical circuits within the temple **2490'** or elsewhere within the eyeglass frame such as by way of one or more wires contained within the cable **2493**. In one implementation, the length of the cable **2493** is about one to four inches. The temple **2490'** shown in FIG. **28**I also includes a receptacle **2497**. The receptacle **2497** is affixed to or integral with the temple **2490** to receive the electrical connector **2495**. Typically, the receptacle **2497** provides a holding mechanism for the electrical connector **2495** when not been utilized. When the electrical connector **2495** is being utilized, the electrical connector **2495** is removed from the receptacle **2497** and coupled to a corresponding counterpart connector of another electrical device. The cord **2493** can provide ease-of-use so that the electrical connector **2495** can be maneuvered to couple to the counterpart connector. In one embodiment, the temple **2490'** can provide a recess for receiving the entire cable **2493**, with the outer surface of the receptacle **2497** being substantially flush to the surface of the temple **2490**. So when the connector **2495** is not in use, the connector **2495** can be in the receptacle **2497**, with the cable **2493** in the recess. In one embodiment, when the cable **2493** is in the recess and the connector **2495** inside the receptacle **2497**, the cable **2493** has substantially no slack. Also, in another embodiment, the cable **2493** can be retractable into the opening **2491**. In the embodiment shown in FIG. **28**I, the electrical connector **2495** is a male connector, and the receptacle **2497** is a female connector or a similarly sized structure.

A number of standard and non-standard connectors have been described. Other types of connectors can also be used. In one embodiment, there is a connector adapter, which serves to transform such other type of connectors to a different interface. For example, an adapter can be a cord with one type of connector at one end and a different type of connector at the other end.

In one or more of the above embodiments, the glasses can access audio signals from another device through a connector at the glasses. The another device can be a multimedia asset players or a radio.

In one embodiment of the invention, the glasses have a storage medium (i.e., memory). The memory can be on a printed-circuit board and, for example, store 256 MBs or more. The memory can be a built-in or removable flash memory. The memory can be coupled to a device external to the glasses through one or more connectors at the glasses. As an example, a 256 MB flash memory is in one of the temples of a pair of glasses, and there is a USB connector at the free end of that temple to couple to an external device.

With the embedded storage medium, the glasses can upload information in the memory to or download information into the memory from an external device, such as a computer. A user can plug the glasses into the computer through a connector, either directly, or indirectly, with, for example, an intermediate wire in between. The user can store files in the glasses. Such an embodiment should reduce the chances of the user losing the files because the user has to lose the glasses as well.

In yet another embodiment of the invention, a pair of glasses includes a multimedia asset player, such as a MP3 player. FIG. **29** shows some of the electrical components for a MP3 player **2500** according to an embodiment of the invention. The player **2500** includes a speaker **2502** and a data bus **2512**, which facilitates data transfer among, for example, a processor **2506**, a storage device **2510**, and a coder/decoder (CODEC) **2504**. The processor **2506**, which can be a microprocessor or controller, controls the operation of the player **2500**. The storage device **2510** stores the multimedia assets, such as MP3 files, or other types of media data that are appropriately formatted. In one example, the MP3 files are digitally encoded songs or other types of audio signals. The storage device **2510** can include a number of separate storage elements. For example, the device **2510** can be a flash memory device, or a minidisk device, and a cache, which can improve the access time and reduce power consumption of the storage device. The storage device **2510** typically also includes a Read-Only Memory (ROM), which stores programs, utilities or processes to be executed in a non-volatile manner. The player **2500** can also include a RAM, such as for the cache.

Once a media asset, such as a song, is selected to be played, the processor **2506** would supply the asset to the CODEC **2504**, which decompresses the asset and produces analog output signals for the speaker **2502**. In one embodiment, the bus **2512** is also coupled to an input/output device **2508**, which would allow a user to upload songs in the glasses to an external instrument, such as a computer, or download songs from the instrument to the glasses.

There are different approaches to select a song. In one embodiment, the songs or the media assets can be categorized in the MP3 player, and the categorization can be hierarchical, with multiple levels in the hierarchy. To illustrate, assume that there are three levels. The top level can be the name of the singer; the second level can be the time period when the asset was produced, and the third level can be the names of the songs. The entries, such as the name of the singer, can be abbreviated. There can be a small display and a control knob to allow a user to scroll down entries in a level. By pushing the knob, the user selects an entry, which can lead the user to a lower level. There can be an entry for moving up a level also. In another embodiment, the display is a touch-screen display, allowing entries to be entered directly on the display. In yet another embodiment, entries can be selected based on voice recognition.

A number of embodiments have been described with the glasses having a connector. In one embodiment, the glasses can have more than one connector. For example, a pair of glasses with two connectors also has a speaker. One connector is, for example, at a broad side of a temple, as in FIG. **28**D. The connector can be for coupling to multimedia assets of a MP3 player. Another connector is, for example, at the end of a temple, as in FIG. **28**A. That connector can couple power to the glasses. The speaker can play the multimedia assets accessed from one connector, based on power from another connector.

As described, power (e.g., external power source) can be coupled to the glasses through a connector. In one embodiment, the power source is embedded inside or inserted into the glasses. Different types of power sources are applicable. For example, the power source can be a battery, a fuel cell, a solar cell, or a re-chargeable battery. The rechargeable battery can be charged through a connector at the glasses.

In an earlier application, namely, U.S. Provisional Patent Application No. 60/509,631, filed Oct. 9, 2003, and entitled "TETHERED ELECTRICAL COMPONENTS FOR EYEGLASSES," which is incorporated herein by reference, there can be a base connected to the glasses through a cord. The cord can be just a piece of flexible conductor encapsulated by a flexible insulator. Typically, a cord includes a number of electrical wires or conductors. There can be one or more electrical components in the base, and there can also be one or more electrical components in the cord. The different types of connectors previously described can be located in the base. In one embodiment, a power source is an electrical component in the base tethered to a pair of glasses. In another embodiment, the glasses are tethered to a base that has a connector. The connector is connected to and draws power from an external electronic device. In this embodiment, electrical components in the glasses draw power from the external electronic devices.

FIG. **30** shows an embodiment where a user **2550** is wearing a pair of glasses **2552**, which include electrical components. There are also tethered electrical components in a base **2554**, which is connected to the glasses **2552** through a cord **2556**. In addition, there is a wire **2558** connected to a connector at the base **2554** to a portable electronic device **2560**. The portable device **2560** can be (a) a multimedia device, such as a MP3 player/recorder or a minidisk players, (b) a wireless communication device, such as a cell phone, or (c) a personal digital assistant, or other types of portable devices with computing and/or entertaining and/or communication capabilities.

Note that instead of connecting to the portable electronic device **2560** through the base **2554**, in another embodiment, the glasses **2552** directly connect to the portable device **2560** through a cord.

In one embodiment, there is an attachment device **2562**, such as a pin or clip. The attachment device attaches at least a part of the glasses to the user's clothing. The attachment device **2562** can serve to attach the cord **2556** and/or the wire **2558** and/or the base **2554** to the user's clothing. The attachment can also be through other mechanisms, such as Velcro.

In a number of embodiments, the speaker described is assumed to emit audio signals. In one embodiment, the speaker emits ultrasonic signals. The glasses can be used, for example, as an insect repellant by transmitting ultrasound to repel insects, such as mosquitoes. In this embodiment, the one or more speakers broadcast the ultrasonic signals away from the user. In other words, the speakers face outwards, not inwards towards the user. In this embodiment, the glasses, which can include a base, also has a power source to provide power to the speaker. There can also be a control

knob to turn the one or more speakers on/off on the glasses. There will be additional discussions on the control knob below.

In another embodiment, the glasses generating ultrasonic signals can be used to produce audio signals that are more directional. For example, two ultrasonic signals are generated by a speaker in the glasses, with their difference frequencies being the audio signals. The audio signals generated based on mixing the two ultrasonic signals can be much more directional than audio signals directly generated from the speaker.

Referring back to FIG. **21**, in one embodiment, the glasses include a microphone **2110**. The microphone **2110** can be at the end of a temple **2104** close to a lens holder **2112**. Or, the microphone **2110** can be in the lens holder **2112**, located directly adjacent to the temple **2104**. In yet another embodiment, there can be a small protrusion extending down from the temple to house the microphone.

With glasses having a microphone, one can use the glasses to record voices into, for example, a storage medium. The storage medium can be in the glasses, or can be in a base or a portable device attached to the glasses.

Different types of microphones can be used. For example, they can be electret microphones, crystal microphones, resistance microphones, piezoelectric microphones or moving-coil microphones.

In one embodiment, the glasses with a microphone also include a speaker that can generate directional sound. A user can speak into the microphone and his message can be transmitted from the glasses in a more directional manner.

In another embodiment, the glasses also include a notification electrical component to provide a notification to the user wearing the glasses. The notification can be to notify, alert or display information to the user. There can be a display located at the inside **2114** of the lens holder, or at the vicinity of the junction **2116** or the hinge of a lens holder and its corresponding temple facing the user. Or, there can be a display at the inside surface of a temple, or at other locations on the glasses. The display can be one or more light emitting diodes. To alert the user, one or more diodes can blink. The blinking can be of a specific sequence. Instead of diodes, the display can be a liquid crystal display. The display can provide indications or information to the user. For example, a number or a variable-height bar can be shown. Other than visual indications, the notification or alert can be audio, like a beeper.

In one embodiment, the notification electrical component is for selecting a multimedia asset in a multimedia asset player in a pair of glasses for the multimedia to play. The multimedia asset player can be a MP3 player.

A number of embodiments of the present invention have been described where electrical signals are transmitted to or from a pair of glasses through a physical connection. In one embodiment, electrical signals are wirelessly coupled to a pair of glasses. The coupling can be short range or long range. The coupling can be directly to the glasses, or to a base connected to a pair of glasses. The glasses with wireless coupling capabilities can be used to couple to a Bluetooth network, the Internet, a WiFi network, a WiMax network, a cell-phone network or other types of networks. The coupling can also be through a point-to-point link, such as an infrared link.

FIGS. **31**A-**31**B show examples of some of the electrical components in or tethered to a pair of glasses for wireless connections, according to embodiments of the present invention. In FIG. **31**A, a high frequency or RF antenna **2602** wirelessly captures high frequency or RF signals for RF transceiver circuits **2604**. If the transceiver circuits are for a conventional superheterodyne system, the transceiver circuits **2604** mix the RF signals down to IF signals. Then the IF signals are processed by baseband circuits. Digital outputs from the baseband circuits are coupled to a processor **2608** for analysis and synthesis.

Outputs from the processor **2608** are fed to a D-to-A converter **2610** to generate audio signals for a speaker **2612**. Similarly, audio analog signals from a microphone **2614** can be fed to an A-to-D converter **2616** to generate digital low frequency signals for the processor **2608** and then to the RF transceiver circuits **2604**. The low frequency signals are up-converted by the RF transceiver circuits **2604** and wirelessly transmitted by the antenna **2602**.

In another embodiment, digital conversion is moved closer to the antenna. For example, instead of mixing RF into IF signals, the RF transceiver circuits **2604** directly perform digital conversion from the RF signals.

Typically, high frequency filters are used at the front end of the RF transceiver circuits **2604** for the RF signals. In one embodiment, to save space, FBAR (film bulk acoustic resonator) duplexer is employed. A set of piezoelectric filters can be used to separate incoming and outgoing signals. For cell phone operation, such filters can enable a user to hear and speak simultaneously. A number of these electronic devices can be on a circuit board in the glasses. Or, some of the devices are in the glasses, while other in the base tethered to the glasses.

FIG. **31**B shows another example of some of the electrical components in or tethered to a pair of glasses for wireless connections according to the present invention. In this embodiment, there does not need to have digital data. A speaker **2620** and a microphone **2622** are connected to an analog interface circuit **2624**, which is coupled to a RF transceiver circuit **2626** and an antenna **2628**. For the speaker application, the transceiver circuit **2626** mixes the RF signals down into IF signals, which are converted by the analog interface circuit **2624** into analog signals for the speaker **2620**. Similarly, for the microphone application, its analog signals are converted into the IF signals by the analog interface circuit **2624** to be up converted by the transceiver circuit **2626** into RF signals for the antenna **2628**. These types of circuitry are suitable for, such as, simple radios, analog cell phones, CB radios, walkee-talkees, police radios or intercom systems.

In one embodiment, most of the electrical components are not in the glasses. The pair of glasses includes an antenna to capture the wireless signals, and a connector. The wireless signals captured are transmitted through the connector to electrical circuits external to the glasses.

A number of processors have been described. The processors can use different types of operating systems. In one embodiment, Symbian Operating Systems are used. In another embodiment, operating systems, such as TinyOS, are used. The operating system could be programmed in C++ and then compiled into machine codes.

For privacy protection, signals can be encrypted before transmission. Encryption can take significant computation power, and may generate a fair amount of heat. In one embodiment, encryption capabilities are located in a base tethered to the glasses. There can be a fan inside the base. The fan can be turned on during encryption. In another embodiment, the fan is activated during other high capacity uses for heat dissipation purposes.

In yet another embodiment, there is a fan in the glasses. The fan is located at a temple of the glasses, in the region close to its lens holder. The fan is used to cool the wearer of the glasses.

In one embodiment, a pair of glasses has access to voice recognition software. The software can be embedded in (a) the glasses, (b) a base tethered to the glasses, (c) a portable device wired or wirelessly coupled to the glasses or to the base, or (d) a computing system wired or wirelessly coupled to the glasses. Or, the software or firmware can be in more than one of the above devices.

Glasses that can couple to signals wirelessly can be used in different applications. For example, the glasses can be a cell phone wireless head set, such as a Bluetooth cordless headset. Such short-distance wireless technologies allow the headset to connect to the user's cell phone without a wire. This would allow the user to drive, eat or perform other functions without getting tangled in a pesky wire.

In one embodiment, the cell phone is a VOIP (voice over Internet protocol) phone.

In one embodiment, for the glasses operating as a cell phone head set, the head set includes active noise cancellation mechanism. For example, the glasses include two microphones. One microphone is for capturing the voice of the user. But the microphone captures ambient noise also. It can be embedded in a protrusion extending from the end of the temple close to a lens holder, towards the mouth of the user, as the microphone **2110** in FIG. **21**. Another microphone can be located at the top of one of the lens holders pointing away from the mouth of the user. This microphone is for capturing ambient noise. As a first order approximation, outputs from the two microphones could be subtracted from each other to provide voice signals with noise reduced.

In yet another embodiment, the glasses with wireless coupling capabilities also have a multimedia asset player, such as a MP3 player. The glasses can be used to receive music directly in digital format over, for example, a data-capable network of a mobile operator. The music can be received, for example, at a speed of 16 Kbits per second, providing sound quality close to compact disc. If the music is transmitted in a compressed manner, such as in a MP3 format, then the music data can be received at a much lower speed. In one embodiment, the glasses also have a microphone and can serve as a cellular phone or a wireless headset of a cellular phone.

In yet another embodiment, the glasses can serve as a radio, again through electrical components in or tethered to the glasses. In this embodiment, the glasses can include a tuner with one or more control knobs. The knobs can be used to select channels and to set the volume.

In one embodiment, a pair of glasses allows personalization by including a preference indicator. The indicator allows a user to provide his preference, such as on whatever is being output by the glasses. In one example, the glasses also has a radio having a speaker and with electrical components for wireless connection. In this example, the indicator can be used by the user to provide his preference regarding whatever is being played by the radio at that time. This preference can be wirelessly transmitted from the glasses to a third party. To illustrate, when the user is listening to a piece of music, the user can indicate he likes the piece of music by pressing a control knob on the glasses. This piece of preference information is then transmitted and received by a service provider, which is then informed of the user's preference. Instead of a control knob, in another embodiment, the preference indicator is a system with a microphone and voice recognition software. The user can indicate his preference vocally.

In another example regarding the personalization process, the glasses can serve as a multimedia asset player, such as a MP3 player. The song that the user has shown preference can be stored in a storage device, which can be in the glasses.

FIG. **32** shows a process **2650** according to one embodiment of the present invention for a personalized radio.

Initially, a pair of glasses according to the present invention receives **2652** a piece of music from a radio station. That piece of music is stored **2654** in a buffer or a temporary storage area. This temporary storage area can be in the glasses or tethered to the glasses. The piece of music is also sent **2656** to a speaker in the glasses.

Assume that the user likes the music. Based on the preference indicator, the user shows his preference. After the glasses receive **2658** an indication of the user's preference, the glasses determine **2660** the song corresponding to the indication. That piece of music can then be moved **2662** from the buffer to a permanent storage area, such as into a flash memory. This would then allow the user to subsequently access the piece of music.

There are different ways to determine **2660** the song or the content being played by the radio corresponding to the indication. For example, one rule is that when the user pushes the preference button or voices his preference, the song (or media asset or media file) that is being played is the one the user likes. Since the operating system knows what song is being played at what time, based on the rule, the song of preference is determined. Another rule is that when the user shows his preference, and there is no song being played at that instance, the song immediately preceding the break is the song of preference.

In another embodiment, the glasses can get **2664** an identification for the song of preference. For example, the glasses can ask the user to provide an identification for the piece of music. This identification can be the type of music, the singer, the name of the music or other identification. In another embodiment, there can be meta data embedded, such as in the beginning part of the music (or media asset). Having such meta data embedded is not uncommon for music in digital format. The meta data can include identifications for the music. The glasses can get **2664** such identification. Based on the identification, the song is categorized **2666** accordingly, such as grouped with other songs having the same identification. Such categorization process would enhance the ease of accessing the song by the user at a later time.

A number of control knobs have been described. FIG. **33** shows a number of attributes **2700** regarding control knobs according to the present invention. The knobs can be of different physical structure **2702**. For example, a control knob can be a roller, a switch or a push-button. A control knob serving as an up/down controller can use two buttons, or a roller.

A control knob can be more intelligent **2704**. For example, a push-button control knob can serve different purposes depending on the duration the knob is being pushed. If a user pushes it for more than three seconds, the knob serves as an on-off toggle switch. In another example, a knob can serve multiple purposes, and the specific purpose depends on the number of times the knob is pushed.

A knob can also be programmed. A user can connect the glasses to a computer and program the knob accordingly. For example, one can program a knob such that if the knob is pushed more than three seconds, the knob would serve as an on/off switch for the glasses.

The location **2706** of a control knob can vary for different applications. A control knob can be located on the glasses. A control knob can be on the top, the side or the bottom of the temple. A control knob can be located at the inside of a temple facing the user. Assume that there are a number of control knobs and all of them are on the edges of a temple, except one. By being at a position different from other control knobs, this knob can serve a specific purpose. For example, it can be an on/off control knob. In yet another embodiment, a control knob can be located in a base tethered to the glasses.

The number **2708** of control knobs can vary depending on operations. For example, there is an on/off control knob and a volume up/down control knob. If the glasses are used for cell phone headset application, in one embodiment, there is also an answer/hang-up control knob. If the glasses serve as a radio, in one embodiment, there is also a tuning control knob, which can be two push buttons. If the glasses serve as a CD player, in one embodiment, there is a play control knob, a stop control knob, and a skip forward/backward control knob. If the glasses serve as a multimedia asset player, such as a MP3 player, in one embodiment, there is a save-this-song control knob, a skip-forward/backward-song control knob and a select-song-to-play control knob.

A number of embodiments of the present invention have been described regarding audio signals. In one embodiment, the glasses further serve as a camera.

FIG. **34** shows one embodiment of electrical components in a pair of glasses with image capturing capabilities. A processor **2752** is coupled to a CCD interface chip **2754** and then to a CCD chip **2756**. Images focused by a lens **2758** are captured and collected by the CCD chip. In another embodiment, there is also be a flash controller **2760** connected to the processor **2752** to control a flash **2762**.

In one embodiment, a number of pixels of the CCD chip **2756** are used as light sensors. The pixels can be used to adjust the sensitivity of the CCD chip **2756** based on the amount of ambient light. For example, if the outside environment is dim, it would take a longer period of time to collect enough charges by the CCD chip **2756** to re-create the image. This implies that the integration time of the CCD chip **2756** should increase.

In yet another embodiment, the camera can pertain to a video camera. The capacity of the memory **2753** increases so as to store the video images.

In one embodiment, the glasses do not offer adjustment on the image distance. The CCD chip **2756** can be located, for example, at the focal point of the lens **2758**. In another embodiment, there is an image distance control knob. For example, a mechanical lever can be pre-programmed or pre-set to move the lens to one or more different positions. One position can be for close-up shots, such as objects from 2 to 4 ft, and another for scenic or vista images, such as objects greater than 6 ft.

Depending on the embodiment, electrical components of a camera can be in a pair of glasses, and/or a base tethered to the glasses, and/or a portable device tethered to the glasses or to the base. For example, the memory **2753** can be in the base tethered to the glasses.

The location of the lens **2758** can vary depending on the embodiment. In one embodiment, referring to FIG. **1**, one location is at the bridge of the glasses, with the lens of the camera facing forward. In this situation, what the user sees is substantially what the captured image would be. In other words, in a general sense, what the user sees is what the user gets. With such an embodiment, it is relatively easy for a user to take pictures, hands-free. In another embodiment, another location for the lens **2758** are at a side portion adjacent to a lens holder, before the joint of the corresponding temple, such as at **2116** in FIG. **21**. Again, the lens of the camera faces forward. Some of the electrical components of the camera can be in that location, and other components in the temple **2104**. These components are electrically connected through one of the joints, such as with a flexible pc board. In yet another embodiment, the lens **2758** can face sideways and outwards in a temple of a pair of glasses, towards the left or right side of the user.

Regarding storing the images, in one embodiment, the images are stored locally. One approach to determine which image to store is the first-in-first-out approach. Once the camera is turned on, the camera takes pictures continually in an automatic mode, such as once every few seconds. When the memory becomes full or under other pre-set or pre-programmed condition, the first picture stored will be deleted when the next picture comes in. In another embodiment, the digital content in one picture is compared to the digital content in, for example, the fifth picture further down. If the difference between the two is not more than a pre-set threshold, the four pictures in between will be deleted. One approach to determine the difference is by comparing the total charges collected by the CCD chip for the two images. If the two sets of charges do not differ by more than a certain threshold, the images in between would be deleted.

The images captured can also be stored at a remote site. For example, the glasses can upload the images to a computer, wirelessly or through a wired connection from a connector at the glasses.

FIG. **35** shows an operation **2800** of taking certain actions based on images captured by a pair of glasses with a wireless transceiver, according to one embodiment of the invention. This operation can be used by a police officer on patrol. Before the officer gets out of his patrol vehicle to confront a suspect, the officer can inform the station. At that point, the camera is turned on **2802**.

There can be different approaches to turn on the camera. In one embodiment, an operator at the station can remind the officer to turn on the camera. Or, the operator can remotely turn on the camera. In yet another embodiment, the camera can be automatically turned on under certain condition. One such condition is that if the camera is out of the patrol vehicle, the camera is automatically turned on. With the glasses having the capability to wirelessly communicate with the patrol vehicle, one method to detect if the glasses are out of the patrol vehicle is based on the wireless signal strength of the glasses. The patrol vehicle can detect the signal strength of the wireless signals, which depends on the distance between glasses and the vehicle. A threshold can be set. If the signal strength is below the preset threshold, the glasses would be assumed to be out of the car, and the camera would be automatically turned on.

After the camera is turned on **2802**, the glasses start to continually take **2804** pictures, such as once every few seconds. The pictures taken are automatically transmitted back **2806** to the patrol vehicle in a wireless manner. In this situation, the patrol vehicle serves as a hub, which stores the pictures. Then, the hub re-transmits **2808** the pictures back to the station. Note that the pictures can be compressed by standard algorithms before they are transmitted. This compression mechanism can be performed by a computer in the patrol vehicle. When the station gets the pictures, they are de-compressed before being viewed, such as by the operator. The pictures enable the operator at the station to see what the officer is confronting. This effectively allows the operator at the station to perform real-time monitoring of or for the

officer. If it is a high risk situation, the operator can quickly react **2810**, such as by dispatching additional support for the officer. In one embodiment, the glasses can include not only a camera but also a microphone for audio pickup, such as sounds from the officer, suspect, witness or environmental sounds (such as door opening, gun shot, etc.).

Regarding ownership of the glasses, the user can own the glasses. In one embodiment, the user leases the glasses from a provider. For example, the user leases a ski goggle with a camera. After the user turns on the camera, as the user skis, the goggle automatically takes pictures. Later, the user can return the goggle to the provider or a kiosk, where the pictures can be retrieved and/or stored. Alternatively, the goggle can include a wireless transceiver and the images could be uploaded continually or automatically to the provider or the kiosk via a wireless network. The provider or the kiosk can transmit the images to a website, such as a website associated with the user. In another embodiment, the user picks up hardcopies of the images, e.g., a CD with the images or a DVD with the video, from the provider or the kiosk.

In one embodiment, the glasses allow the user to enter his identification. This can be done, for example, through a control knob at the glasses. Such identification is then linked to the images. Based on the identification, the user can return to the provider or kiosk at a subsequent time to pick up the images previously left behind.

In yet another embodiment, the pair of glasses with a camera also has a speaker and a wireless transceiver. It can be used to remotely control or direct the user wearing the glasses. FIG. **36** shows one such operation **2850** according to one embodiment.

To illustrate the operation **2850**, assume that the user is a paramedic helping a patient. The glasses continually take pictures **2852** of objects directly in front of the paramedic, such as images around four feet away from the eyes of the paramedic. The pictures are wirelessly transmitted **2854** to a remote site, such as a hospital, to be viewed by a doctor. Again, this transmission can be a two-step process. For example, pictures can be transmitted to the paramedic's ambulance, which can then re-transmit to the remote site. The first transmission from the glasses to the ambulance can be through a low-power, short-range, broadband, wireless transmission protocol. The second transmission from the ambulance to the hospital can be through a much longer-range, higher power, broadband, wireless transmission protocol. Again, compression and de-compression techniques can be used to enhance the rate of transmission by reducing the amount of data to be transmitted.

Based on the images, the doctor sends out voice messages to the paramedic. These messages are wirelessly transmitted to and received **2856** by the glasses. The speaker in the glasses outputs **2858** the messages to the paramedic.

In another embodiment, the glasses also have a microphone, which allows the paramedic to communicate directly with the doctor also.

In one embodiment, the glasses can take pictures and can be a multimedia asset player. Pictures and the multimedia assets can share the same memory storage device. In this situation, the capacity for the multimedia assets and pictures can be interrelated. For example, a user can take more pictures if there are less multimedia assets, such as fewer songs in the storage device.

A number of embodiments have been described regarding electrical components in the temples of glasses. The locations selected are for illustration purposes. In other embodiments, some of the components are embedded fully or partially in other areas of the glasses, such as the lens holders or the bridges of the glasses. For example, there are glasses where there are shields at the edges of the lens holders of the glasses. These shields can wrap around, or better conform to the profile of, the face of the wearer. There can be transparent or translucent windows on these shields also. The shields are not limited to be in primary frames. They can be in, for example, fit-over glasses, auxiliary frames or safety glasses. To illustrate, in fit-over glasses, such shields can go over or cover at least a portion of the primary frames. One or more electrical components can be in such shields.

Note that in one embodiment, a pair of glasses does not have to include lenses. Also, a number of embodiments have been described with a pair of glasses tethered to a base. In one embodiment, a pair of glasses includes a base and a cord connecting the base to the glasses.

In yet another embodiment, a pair of glasses also includes a sensor. FIG. **37**A is a chart **2900** that depicts examples of sensors in the glasses.

In one embodiment, the sensor is a "being worn" sensor. The "being worn" sensor indicates whether the glasses are being worn by its user. The "being worn" operation can be performed using, for example, a thermal sensor, a motion detector, a stress sensor or a switch.

In one embodiment, a motion detector is used as a "being worn" sensor. A threshold can be set, such that if the amount of motion exceeds the threshold, the eyewear is assumed to be worn. The motion detector can, for example, be achieved by a mechanical means or an accelerometer.

In another embodiment, the "being worn" sensor includes two thermal sensors. One sensor can be at approximately the middle of a temple, such as in a region that touches the head of the user wearing the glasses. The other sensor can be at the end of the temple, close to its hinge. If the temperature differential between the two sensors is beyond a certain preset value, the eyewear would be assumed to be worn. The differential is presumed to be caused by a person wearing the pair of glasses.

In yet another embodiment, the "being worn" sensor includes a stress sensor at the hinge of the temple. The assumption is that when the eyewear is worn, the hinge is typically slightly stretched because typically, the width of the head of the user is slightly wider than the width between the temples when the two temples are in the extended positions. If the value of the stress sensor is beyond a certain preset value, the glasses would be assumed to be worn.

In a further embodiment, the "being worn" sensor can be a switch. For example, at the hinge between a temple and its corresponding lens holder, there is a switch. When that temple is fully extended outwards, the switch is turned on. The switch can be a pin. When the temple is fully extended outwards, the pin is pressed. When both temples are fully extended outwards, in one embodiment, the glasses would be assumed to be worn by the user.

In one embodiment, another type of sensor is an environmental sensor. The environmental sensor can sense environmental conditions, such as one or more of ultraviolet radiation, temperature (e.g., ambient temperature), pressure, light, humidity and toxins (e.g., chemicals, radiation, etc.).

In another embodiment, another type of sensor is a condition sensor. The condition sensor can sense the conditions of the user of the glasses. Examples of physical sensors include sensing one or more of distance traveled, location, speed, calories consumed, temperature and vital signs associated with the user of the glasses. The distance traveled could represent the horizontal distance traveled or the vertical distance (i.e. elevation) traveled. The speed can

be the rate of movement along the horizontal distance traveled and/or the vertical distance. In yet another embodiment, the condition sensor can sense the emotional conditions of the user of the glasses.

The sensors can be provided in a redundant or fault-tolerant manner. For example, sensors can come in pairs in the glasses. When one malfunctions, the other one will take over its operation. In another embodiment, the sensor information can be processed in a differential manner to examine changes to the sensor information. The sensors can by powered by a battery, solar energy, or kinetic energy. For reduced power consumption, the sensors can remain in a low-power state unless data is being acquired by the sensors. In yet another embodiment, two or more of the auxiliary sensors can communicate with one another (wired or wirelessly) to exchange data or control information.

A number of embodiments have been described regarding one or more electrical components at least partially embedded in a pair of glasses. In one embodiment, one or more electrical components are at least partially embedded in a temple tip of a pair of glasses. Temple tips are particularly common for wire or metal frames. The pair of glasses has a first and a second lens holders for receiving lenses. Each of the lens holders has a first side and a second side. The pair of glasses has a bridge element that couples the first side of the first lens holder to the second side of the second lens holder. The pair of glasses also includes a first temple and a second temple. The first temple is pivotally secured to the second side of the first lens holder through a joint, while the second temple is pivotally secured to the first side of the second lens holder through another joint. A temple typically has two ends, a first end and a second end. The first end can be the end that is pivotally secured to a lens holder through a joint, and the second end can be the other end of the temple. It is not uncommon that a temple includes a main body and an enclosure that grabs onto the main body of the temple. The second end is typically where the enclosure grabs onto the main body. The enclosure can be made of a different material than the main body of the temple. In one embodiment, such an enclosure is a temple tip, and there is an electrical component, partially or fully, embedded in the tip. There can also be a connector, such as the connector **2300** shown in FIG. **25**, at the temple tip. In another embodiment, the temple tip can include a female connector, which can be similar to the female connector **2310** shown in FIG. **26**B. As the temple tip grabs onto the main body of the temple, the female connector can make electrical contact with a male connector at the main body of the temple. Typically, particularly before a pair of glasses has been extensively worn, the temple tip can be removed and re-inserted back on to the main body of the temple without a lot of difficulties. Such a temple tip can be an after-market component, with different temple tips having different electrical components to serve different functions.

FIG. **37**B is a diagram of a temple arrangement **2910** according to one embodiment of the invention. In this arrangement, a temple tip is not considered as a part of the temple. The temple arrangement **2910** includes a temple **2912** that is associated with a pair of eyeglasses. Over the end of the temple **2912** that is opposite the associated lens holder, a temple tip **2914** is provided. The temple tip **2914** can be held to the temple **2912** by frictional forces and/or adhesive. The temple tip **2914** includes at least one electrical component **2916** that is at least partially embedded therein. The temple tip **2914** can be manufactured and delivered to resellers or retailers as such. Alternatively, the temple tip **2914** can be separately provided as an optional replacement temple tip for an existing temple tip. Hence, as after manufacture, upgrade to the eyewear can be had through replacing the existing temple tip with the replacement temple tip. The colors and shapes of the temple tip **2914** can vary widely. In the after manufacturing environment, the reseller or retailer can be provided with a range of different colors and shapes so that a user can receive a replacement tip that reasonably matches the color and shape of the temple or that provides an altered appearance as desired by the user.

Besides a replacement temple tip such as illustrated in FIG. **37**B, a temple tip can also be effectively modified by a fit-over temple or temple cover. FIG. **37**C is a diagram of a temple cover **2920** that at least partially covers a temple (e.g., temple **2912**) according to one embodiment of the invention. As another example, the temple cover **2920** can be a fabric or other material, such as a sock or sleeve, that slides over and at least partially covers a temple tip. The temple cover **2920** can include at one electrical component **2922** that is either attached thereto or at least partially embedded therein. The temple cover **2920** can also include an opening **2924** so as to received a temple or a temple tip. The temple cover **2920** can be held to a temple by frictional forces and/or adhesive. FIG. **37**D is a diagram of a fit-over temple **2926** that at least partially fits over a temple according to one embodiment of the invention. For example, the fit-over temple **2926** can at least partial fit-over a temple tip. The fit-over temple **2926** includes at one electrical component **2928** that is either attached thereto or at least partially embedded therein. The fit-over temple **2926** can also include an opening **2930** so as to receive a temple. The fit-over temple **2926** can be held to a temple by frictional forces and/or adhesive. As an example, the fit-over temple **2926** can be plastic or other material. The colors and shapes of the fit-over temple **2926** can vary widely. In the after manufacturing environment, the reseller or retailer can be provided with a range of different colors and shapes so that a user can receive a replacement temple cover or fit-over temple that reasonably matches the color and shape of the temple or that provides an altered appearance as desired by the user.

In one embodiment, a fit-over temple or temple cover according to the invention can further include a connector or cable to facilitate electrical connection with the at least one electrical component that is either attached to a temple or a temple tip or at least partially embedded therein.

In one embodiment, an electrical component is a component of an electrical circuit, and the electrical circuit is for performing at least a desired, intended or predetermined function.

A number of embodiments have been described above for an eyeglass frame, i.e., primary frame, are also applicable to an auxiliary frame. An auxiliary frame can attach to a primary frame through different techniques, such as using clips. Another technique to attach an auxiliary frame to a primary frame is by way of magnets. Examples of using magnets as an attachment technique can be found, for example, in U.S. Pat. No. 6,012,811, entitled, "EYEGLASS FRAMES WITH MAGNETS AT BRIDGES FOR ATTACHMENT."

A number of embodiments have been described where one or more electrical components are at least partially embedded in a pair of glasses. In yet another embodiment, the one or more electrical components are at least partially embedded in an eye mask.

FIG. **38** shows one embodiment **2925** where one or more electrical components are at least partially embedded in an eye mask **2927**. The eye mask **2927** includes a piece of

fabric that is opaque so that when the mask is worn, the mask wraps around the eyes to block light from entering into the eyes of the user.

The embodiment **2925** includes a wrapping mechanism to hold the fabric onto the head of a user so that when the mask is worn by the user, the mechanism allows the fabric to have a relatively tight and comfortable fit over the face of the user. In one approach the wrapping mechanism is achieved with the fabric in the shape of a band and having a certain degree of elasticity. When the mask is worn by the user, the elasticity of the fabric allows the mask to establish a relatively tight fit over the face of the user. In another example, the fabric is a long piece of material. The wrapping mechanism includes a clip or Velcro at the two ends of the piece of material to tie the two ends together. In another example, the wrapping mechanism includes two elastic pieces of elastic materials at the two ends of the fabric. To wear the mask, each elastic piece of material goes over one of the ears of the user so that the fabric establishes a relatively tight fit over the face of the user. In yet another embodiment, the mask **2927** includes a notch **2935** to accommodate the nose of the user. In another embodiment, there can be additional padding in the vicinity of the one or more electrical components so that if an electrical component is pressed against the user, the padding serves as a buffer or cushion.

In one embodiment, a speaker **2929** can be at least partially embedded in the mask **2927**, and can be positioned close to and facing one of the ears of the user. The speaker **2929**, through an electrical connector, is electrically connected to a cable **2931**. The cable **2931** can also have a connector **2933** at its distal end. The connector **2933** can be plugged into another device, such as a MP3 player or a CD player. After putting on the mask, with the connector **2933** plugged into the another device, the user would be able to hear, for example, audio sounds such as music. The eyemask **2925** can be applied to different areas. For example, the user can be on a plane, and would like to rest. The user can put on the eyemask **2925**, and plug the connector **2933** into a media outlet at an armrest of her seat in the plane. Thus, the user can enjoy music while taking a rest. The embodiment **2925** could also include a plurality of speakers, such as one for each of the user's ears.

In another embodiment, the eyemask **2927** includes the speaker **2929** and a battery that is electrically connected to the speaker **2929**. The battery can be in a pocket on the eyemask and can be replaceable. The battery can also be a rechargeable battery, such as a lithium-ion battery, and there is a connector at least partially embedded in the eyemask. The connector can be used to recharge the battery.

FIG. **39** shows another embodiment **2950** where one or more electrical components are at least partially embedded in a night cap **2952**. In one embodiment, the cap **2952** is at least partially made of fabric. In another embodiment, the cap **2952** is entirely made of fabric. The cap includes a wrapping mechanism. When the cap is worn, the wrapping mechanism holds the cap onto the head of the user, and allows the cap to have a relatively tight and comfortable fit over the head of the user. Again the wrapping mechanism can be an elastic band at the base **2962** of the cap **2952**. Or, the wrapping mechanism can include clips or Velcro as previously described.

The cap can include at least one speaker **2954**, which is at least partially embedded in the cap **2952**. When the cap **2952** is worn by a user, the speaker **2954** is positioned close to and facing one of the ears of the user. The speaker **2954** can, for example, be electrically connected through a connector to a device **2962** in a pocket **2960** on the cap **2952**. The electrical connection can be through a cable **2956** external to the cap **2952**. The cable **2956** also can have a connector **2958** to be plugged into the device **2962**. In another embodiment, the cable **2956** is embedded in the cap. The device **2962** can be an asset player, such as a MP3 player, with a battery. Through the connector **2958**, audio signals from the device **2962** can be received by the speaker **2954** and heard by the user. There can be one or more additional pockets on the night cap for one or more additional electrical components. When worn, the night cap does not have to cover the eyes of the user. In yet another embodiment, when worn, the night cap further covers the eyes of the user, as shown in FIG. **39**. In one embodiment, the embodiment **2950** further includes padding in the vicinity of an electrical component to serve as a buffer or cushion between the user and the electrical component.

A number of embodiments have been described involving a speaker in an eyemask or a night cap. In one embodiment, the audio output from the speaker can serve to cancel the environmental sounds in the vicinity of the user. For example, if the user is on an airplane, the surrounding environmental sound has a relatively high level of white noise. This white noise can be detected by a pickup device and cancelled by noise cancellation circuitry provided within the eyemask or night cap. Namely, the audio output from the speaker serves to cancel the white noise of the user's environment. In another embodiment, the electrical component embedded or partially embedded is not a speaker, but can be a sensor, which can sense a physiological function of the user.

FIG. **40**A is a diagram illustrating a temple **3000** having a slot for receiving a removable electronic device **3002** according to one embodiment of the invention. In one example, the removable electronic device **3002** can be a memory storage device, sometimes referred to as a memory card. As shown in FIG. **40**A, the removable electronic device **3002** is inserted into the slot. Although the slot could be electrically non-functional, typically the slot provides an avenue for the removable electronic device **3002** to be physically and electrically connected to electrical circuitry within the temple **3000** or elsewhere within the eyeglass frame. FIG. **40**B is a diagram illustrating the temple **3000** having a recessed lower portion **3004** according to another embodiment of the invention. The recessed lower portion **3004** facilitates the insertion and removal of the removable electronic device **3002**. In either embodiment, the removable electronic device can be manually inserted and removed or can use more complicated mechanical mechanisms to assist with the insertion and removal (e.g., spring-based push and release structure).

FIGS. **41**A and **41**B are diagrams illustrating a pair of glasses **3100** having a camera **3101** coupled thereto, according to one embodiment. The camera includes an image sensor **3102** and a camera housing **3106** (also referred to as a camera support arm). In this embodiment, the camera **3101** is rotatably coupled to an exterior surface of a temple **3104** of the pair of glasses **3100**. The camera support arm **3106** is attached to the temple **3104**. The camera support arm **3106** can couple to the temple **3104** using a hinge **3108**. In one implementation, the hinge **3108** can use a spring or cam mechanism so that the camera support arm **3106** is held either against the temple **3104** when not in use or held in an open or extended position when in use. FIG. **41**A illustrates one position of the camera support arm **3106** when the camera **3101** is not in use. FIG. **41**B illustrates one position of the camera support arm **3106** when the camera **3101** is in

use. The presence of the camera **3101** with the pair of eyeglasses **3100** enables a wearer of the pair of eyeglasses **3100** to take pictures of what the wearer is looking at. It should be noted that other supporting circuitry such as data storage for pictures, switches, battery, and electronics for the camera **3101** can be in the temple **3104**, in the camera support arm **3106**, elsewhere in the pair of glasses **3100**, or even tethered thereto. However, in one implementation, the camera **3101** is completely self-contained in the camera housing **3106**. In one embodiment, the hinge **3108** can also serve as a switch to turn the image sensor **3102** on or off.

In one implementation, to improve overall appearance of the pair of glasses **3100**, the temple **3100** can provide a recess for receiving the camera support arm **3106** when the camera is not being utilized. Such may improve the aesthetic appearance of the pair of glasses **2100**.

In another implementation, the pair of glasses **3100** can further provide a viewfinder. The viewfinder can assist the user in directing the image sensor **3102** towards whenever the user desired to photograph. The viewfinder can be a separate apparatus that is extended by user action or can be a viewfinder that is visually present or presented on one of the lenses. In one example, the viewfinder can be an extendable viewer through which the user can look through to determine the field of reference of the image sensor **3102**. The viewfinder can be extendible from either of the temples, such as in a telescoping, sliding or flipping action. Additionally, when the camera support arm **3106** is extended, a viewfinder can be automatically initiated. For example, indicators on one of the lens can be visually presented, such as through optical projection from one or more light sources. In another embodiment, the viewfinder can be always present, such as with indicators on one of the lens of the pair of glasses **3100**. The indicators can be a few faint dots to define an area on the lens.

In one embodiment, the camera support arm (camera housing) **3106** is removably coupled to the hinge **3108**. As such, the camera **3101** can be removed from or attached to the pair of glasses **3100**. Indeed, the camera support arm (camera housing) **3106** can be a camera body that houses electronics for the camera **3101**. In such case, the camera **3101** can operate as a camera apart from the pair of glasses **3100**.

In one implementation, the camera support arm **3106** has a connector and the hinge **3108** has a counterpart connector. In one example, the connectors are peripheral bus connectors, such as USB connectors. In such case, the camera support arm **3106** can be attached and removed from the pair of glasses **3100**. Such a connection via the connectors can be electrically functional or non-functional. If functional, electrical components in the pair of glasses **3100** can be electrically connected to electrical components in the camera **3101**.

Still further, in one embodiment, the connector at the end of the hinge **3108** enables connection of a variety of different peripheral devices to the pair of glasses **3100**. For example, the different peripheral devices (portable electronic devices) can be the camera, a memory card, or a media player. In one embodiment, electrical components integral with the pair of glasses **3100** can be shared by the different peripheral components. The hinge **3108** is not necessary in other embodiments, see FIGS. **28**F-**28**H, where a connector is attached or integral with a temple of a pair of glasses. If desired, the camera **3101** or other peripheral devices can include in its structure a hinge or other mechanism to permit positioning the camera or other peripheral devices.

In still another embodiment, an angled or hinged adapter can be inserted between a connector attached to the pair of glasses **3100** and a connector of the camera **3101** or other peripheral devices. The adapter can be electrically functional or non-functional.

Regardless of the electrical components being utilized with the eyeglass frames, it may be desirable for the eyeglass frames to be substantially balanced in weight. In the event that electrical components are attached and/or at least partially embedded in one of the temples of the eyeglass frame, the other of the temples can include other electrical components or even a counter weight so that the eyeglass frame can be substantially balanced.

A number of embodiments in the invention can be implemented in software, hardware or a combination of hardware and software. A number of embodiments of the invention can also be embodied as computer readable code on a computer readable medium. The computer readable medium is any data storage device that can store data which can thereafter be read by a computer system. Examples of the computer readable medium include read-only memory, random-access memory, CD-ROMs, magnetic tape, optical data storage devices, and carrier waves. The computer readable medium can also be distributed over network-coupled computer systems so that the computer readable code is stored and executed in a distributed fashion.

The present invention provides different embodiments of glasses that can be applied to multiple functions. With a user wearing such a pair of glasses, it would be more difficult for a third party to know the specific function or reason the user is wearing the glasses for. Regarding the locations of the electrical components for the multiple functions, different embodiments range from all of the components in the glasses to the glasses primarily functioning as a headset.

FIG. **42** shows one embodiment of the invention with a pair of glasses **4100** having speakers. The glasses **4100** include a first lens holder **4102** and a second lens holder **4104**. Both lens holders are for receiving lenses. The first lens holder **4102** has a first side and a second side. The second lens holder **4104** also has a first side and a second side. The pair of glasses has a bridge element **4106**. The bridge element **4106** is coupled to the first side of the first lens holder **4102** and the second side of the second lens holder **4104**. In one embodiment, the lens holders and the bridge element are not separate pieces, but are an integral piece.

The pair of glasses **4100** also includes a first temple **4108** and a second temple **4110**. The first temple **4108** is pivotally secured to the second side of the first lens holder **4102** through a joint. And, the second temple **4110** is pivotally secured to the first side of the second lens holder **4104** through another joint.

In a number of embodiments, the glasses include one or more electrical components partially or fully embedded in the glasses. An electrical component can be a resistor, capacitor, inductor, transistor or other electrical part, other than just a conductor or a wire allowing current to flow between or among electrical components. An electrical component can also be more complicated such as an electrical circuit or an integrated circuit.

FIG. **42** shows one embodiment of the glasses **4100** with electrical components that include two speakers, each at least partially embedded in the glasses. The speakers can be used to enhance the hearing of the user wearing the glasses. In one example, each speaker, such as speaker **4112**, is in one of the temples, such as temple **4110**, of the glasses **4100**. Each speaker is closer to one end of the temple than the other

end. In the embodiment shown in FIG. **42**, each speaker is closer to the end of the temple that is in the vicinity of the lens holder or the hinge or the joint of the glasses, instead of the end that is typically not attached to a hinge. The end of a temple that is typically not attached to a hinge can be known as the free end of that temple. The speakers can be partially embedded in the glasses. For example, the mouth of each speaker, where audio signals propagate from and where sometimes there are small holes on a sheet of material, can be exposed and not totally covered up by the temple.

In the embodiment shown in FIG. **42**, both speakers are embedded in the glasses, and the speakers output audio signals in the outward direction. In another embodiment, the speakers output audio signals in the inward direction. For example, the output of the speakers can be facing inwards, towards the user.

The speakers can be embedded in the glasses in a number of ways. For example, each speaker can be first assembled onto or electrically coupled to a circuit board, which includes additional electrical components for the glasses. The glasses can be made of plastic (e.g., plastic frames). With the corresponding speaker, each circuit board can be shaped to fit, for example, into a temple of the glasses. Each circuit board with a speaker is placed into a mold. Then, hot, molten plastic is injection molded around each circuit board with the speaker to form the two temple pieces of the glasses. To reduce weight, the wall of the glasses can be made relatively thin through injection molding techniques.

In another embodiment, the glasses have metallic frames. For example, the frames can be made of Titanium, which is a relatively light metal. Also, Titanium is relatively non-conductive and strong, and is quite immune to corrosion. Further, Titanium can be anodized or heat colored.

For glasses with metallic frames, to prevent circuits from being shorted or to reduce leakage current, one embodiment provides an insulating layer between a circuit board in the glasses and the corresponding metallic frame. One example of an insulting layer is a tape to encapsulate the electrical components. The tape is non-conducting so as to provide insulation and, to a certain degree, can also provide mechanical stiffness. One way to make such a temple is to have two sheets of the metal die-stamped to form the two halves, or the two faces of a temple piece. A circuit board with a speaker is made to fit into the space between the faces. Then, two die-cut pieces of tape can cover the top and the bottom surfaces of the circuit board. The board and the speaker with the tape are sandwiched between the faces to form the temple. The tape can be double-sided sticky tapes, with one side sticking to the circuit board, and the other side sticking to the temple. An adhesive can be used to glue the two faces of the temple piece together.

In yet another embodiment, the frames are made of hard rubber. The frames can be manufactured in an approach similar to injection molding techniques, with circuit boards and/or speakers inserted into the mold along with the rubber at the time of molding.

Different types of speakers can be used, such as, standard, fixed-magnet/moving coil speakers; speakers with fixed-coil and a steel diaphragm; piezoelectric speakers; and electrostatic speakers.

In one embodiment, the glasses further include a tube, such as a plastic tube, extending from each speaker, such as tube **4114** from speaker **4112**. Each tube serves to guide sound generated by its corresponding speaker to one of the ears of the user. In one embodiment, each tube extends from its speaker to the opening of an ear canal of the user.

FIG. **43** shows an embodiment where a tube **4114** is located on the outside of a temple **4110**. In another embodiment, the tube can be on the inside of a temple.

In one embodiment, a tube can be rotated, such as from along the temple (behind a temple if the tube is on the inside of the temple) to being downward at an angle towards one of the ears of the user, such as the position shown in FIG. **43**. To increase flexibility, the tube can be attached to a rotating disk **4116**, which allows rotation about the corresponding speaker.

In another embodiment, the tube is malleable. This allows the tube to be placed in different positions.

In one embodiment, the length of the tube is adjustable. FIG. **44** shows such an embodiment of a pair of glasses with a retractable tube **4118**. In the figure, the tube is shown to be in its extended position. As an example, the retractable tube **4118** can be retracted into the corresponding temple. As another example, the retractable tube **4118** can retract on itself (e.g., telescoping).

In one approach, there also is a plug **4115** at the end of the tube **4114** for inserting into an ear of the user, as shown in FIG. **43**. The plug **4115** can be an ear bud. The plug **4115** can provide a cushion of foam rubber or other materials. Such materials give comfort and/or enhance sound coupling to the ear canal.

In one embodiment, each ear bud is individually made based on an impression of the user's corresponding ear canal. In another embodiment, each ear bud is custom fitted into the corresponding ear of the user.

In another approach, there is a funnel at the output of a speaker. FIG. **45** shows the cross section of such a funnel from a speaker **4120** at a temple region of the glasses. As shown in FIG. **45**, the speaker **4120** sits on a speaker frame **4122**, and the speaker **4120** is electrically connected to a circuit board **4124**. As sound is generated from the speaker **4120**, the sound propagates to a tube **4126** through a structure in the shape of a funnel **4128**. Such a structure can help guide the sound to the tube **4126** (i.e., improved sound coupling). Also, FIG. **45** shows the tube **4126**, which can be the tube **4114** shown in FIG. **43**, mounted onto the temple region of the glasses with a circular lip **4130**. Such a lip **4130** allows the tube **4126** to rotate relative to the glasses. In the embodiment shown in FIG. **45**, the speaker **4120** is embedded in the glasses. Also, in FIG. **45**, the tube **4126** is at the front side of the speaker **4120**. In another embodiment, a tube can extend from the back side of the speaker to couple the sound from the speaker to an ear.

In the embodiment of the glasses with two speakers, the two speakers can also be electrically connected by a conductor or an electrical wire, with the conductor linking the speakers through the glasses, such as through the lens holders of the glasses. FIGS. **46**A-**46**B show an embodiment of the wire **4130**, with FIG. **46**A illustrating a hinge **4132** of the glasses in the extended position, and FIG. **46**B illustrating the hinge **4132** partially closed. As shown in the two figures, the wire **4130** is embedded in a temple **4134** to connect to the speaker in that temple. The wire **4130** extends from the temple **4134** to a lens holder **4136**, and then to the other temple of the glasses to connect to the speaker in the other temple.

Referring back to FIG. **42**, electrical components in the glasses can also include at least one microphone **4098**, which can be located at a temple **4110**, closer to the hinge than the free end of that temple **4110**. The microphone **4098** receives audio signals. For glasses with hearing enhancement capabilities, the audio signals are modified or enhanced (to be further described below), and then sent to

the speaker(s) in the glasses for the user to hear. In the embodiments that do not include plugs or ear buds that plug the ear canals of the user, but may still include tubes guiding sound from speakers to each ear, the user can hear both the enhanced sound based on hearing enhanced electrical components and sound directly from the ambient environment.

In another embodiment, there can be two microphones. Each microphone can, for example, be located close to one hinge of the glasses. The microphone close to the left hinge can be electrically connected to the speaker at the left temple, and the microphone close to the right hinge can be electrically connected to the speaker at the right temple. The one or more microphones can be directional, more preferential towards signals in specific directions. For example, the microphone close to the left hinge can be more preferential towards signals coming from the left, and the microphone close to the right hinge more preferential towards signals from the right.

In one embodiment, to reduce the weight of the glasses and/or to enhance the ease of aesthetic design of the glasses, some of the electrical components are not in the glasses. Instead, they are in a base or a portable device carried or worn by the user. A number of embodiments regarding a base have previously been described in U.S. patent Ser. No. 10/964,011, entitled "TETHERED ELECTRONIC COMPONENTS FOR EYEGLASSES," and filed Oct. 12, 2004, which is hereby incorporated by reference. In embodiments with the base, the base is tethered, or connected with a wire, to the glasses. In embodiments with the portable device, the portable device is electronically coupled to the glasses or to the base (if there is a base) wirelessly or through a wired connection.

FIG. **47** shows one embodiment of the invention with a pair of glasses **4150** having speakers. The glasses **4150** can be wirelessly coupled to a portable device **4152**. In this embodiment, there can also be one or more microphones **4154** wirelessly coupled to the glasses. As an example, FIG. **47** shows the microphone **4154** in a package that can include a clip **4156** to attach the microphone **4154** to a piece of clothing of the user, such as to one of the lapels on a jacket of the user. In such a wireless embodiment, the glasses **4150** also include a wireless transceiver for connection to the portable device **4152** and/or the microphone **4156**.

FIGS. **48**A-**48**B show examples of different embodiments illustrating some of the electrical components for wireless connections to, or for a wireless transceiver in, a pair of glasses. In FIG. **48**A, a high frequency or RF antenna **4170** wirelessly captures high frequency or RF signals for RF transceiver circuits **4172**. If the transceiver circuits are for a conventional superheterodyne system, the transceiver circuits **4172** mix the RF signals down to IF signals. Then the IF signals are processed by baseband circuits to form digital outputs. Digital outputs from the baseband circuits are coupled to a processor **4174** for further processing. The baseband circuits can be incorporated in the processor, or can be separate from and coupled to the processor. Outputs from the processor **4174** are fed to a D-to-A converter **4176** to generate audio signals for a speaker **4178**.

Similarly, audio analog signals from a microphone **4180** can be fed to an A-to-D converter **4182** to generate digital signals for the processor **4174** and then to the baseband circuits and the RF transceiver circuits **4172**. The digital signals are then up-converted by the RF transceiver circuits **4172** and wirelessly transmitted by the antenna **4170**.

In another embodiment, digital conversion is moved closer to the antenna. For example, instead of mixing RF into IF signals, the RF transceiver circuits directly perform digital conversion from the RF signals.

High frequency filters can be used at the front end of the RF transceiver circuits for the RF signals. In one embodiment, to save space, FBAR (film bulk acoustic resonator) duplexer is employed. A set of piezoelectric filters can be used to separate incoming and outgoing signals. For cell phone operation (which will be further described below), such filters can enable a user to hear and speak simultaneously.

FIG. **48**B shows another example of some of the electrical components in or tethered to a pair of glasses for wireless connections. This embodiment does not depend on digitizing signals. A speaker **4190** and a microphone **4192** are connected to an analog interface circuit **4194**, which is coupled to a RF transceiver circuit **4196** and an antenna **4198**. For the speaker application, the transceiver circuit **4196** converts the RF signals down into IF signals, which are converted by the analog interface circuit **4194** into analog signals for the speaker **4190**. Similarly, for the microphone application, its analog signals are converted into the IF signals by the analog interface circuit **4194** to be up converted by the RF transceiver circuits **4196** into RF signals for the antenna **4198**. These types of wireless connection circuitry are suitable, such as, for simple radios, analog cell phones, CB radios, walkee-talkees, police radios, intercom systems, or hearing enhancement applications.

Note that in the above examples shown in FIGS. **47**A-**47**B, signals from the microphones are transmitted by a wired connection, instead of a wireless connection.

As described above, in different embodiments, some of the electrical components are not in the glasses. Instead, they are in a base or a portable device, which can be carried by the user. The portable device can be electrically coupled to the glasses through a wired connection. In such approaches, the glasses also include at least one connector to receive an electrical wire from the base or the portable device. The connector can be at the free end of one of the temples of the glasses, or the connector can be at another location of the glasses. Different types of standard or non-standard connectors can be used and have previously been described in U.S. Provisional Application No. 60/583,169, filed on Jun. 26, 2004, which is hereby incorporated by reference.

In one embodiment, a standard cylindrical plug connector is located at one end of a temple. From a different perspective, the temple molds around the end of the plug. FIG. **49** shows one such embodiment. The plug **4220** can be a standard audio connector or a 3-wire or three terminal plug, such as a 3.5 mm male stereo mini-phone plug. The 3 wires for such a plug are typically one for ground, the other two applicable for two signals, such as signals for two speakers to create stereo effects. FIG. **49** also shows the three wires **4222**, **4224** and **4226**, inside the temple, extended from the plug **4220**. These wires are for connection to electrical components in the glasses.

In one embodiment, the cylindrical plug **4220** shown in FIG. **49** can be covered, such as with a cap or a cover, to protect, encapsulate or shroud the plug **4220**. Or, at least a portion of the plug is covered. Such covering can be for esthetic reasons, or can be to prevent the plug **4220** from scratching the face of the user (if the plug has relatively sharp edges) when the user is putting on the pair of glasses.

Instead of a three terminal plug, other types of standard cylindrical plugs applicable to different embodiments of the present invention include, for example, a serial connector with 3 pins, typically one for ground, one for transmitting data (Tx) and the third for receiving data (Rx); or a 2-wire

connector, one served as ground, the other for carrying signals, such as power and modulated signals.

Instead of a standard connector, a connector can be a non-standard connector. FIG. **42** shows a non-standard connector **4113** at the free end of one of the temples **4110**. Instead of having a connector at the free end of a temple, a connector can be at another location of the glasses. FIG. **50** shows an example of a non-standard connector **4230**. The connector **4230** includes one or more conductive pads, **4232** and **4234**, on the top side of a temple **4236**. The connector **4230** is designed to receive another connector **4240** that grabs onto or attaches around the side of the temple. There can be an indentation **4242** on the temple **4236** to receive the other connector **4240**. The other connector **4240** can include a top **4244** and a bottom **4246** clip. There are a number of conductive pads or sheets inside the other connector **4240**. The indentation **4242** provides alignment for connection. When attachment is at the indentation **4242**, the conductive pads, **4232** and **4234**, at the temple **4236** will be in contact with the conductive pads or sheets in the other connector **4240**. There can also be another indentation **4248** at the temple **4236** to receive the bottom clip **4246**. This can further enhance the alignment process and assist with securing the connection.

In FIG. **50**, the other connector **4240** is tethered to a plug **4250**, which can be inserted into a portable device **4252**. The portable device **4252**, for example, can be a cell phone. The portable device can include personal digital assistant (PDA) functionalities. This type of non-standard clip-type connector could be relatively easily applied to the temple with one hand, for example, while the user is driving a car.

In the wired embodiment shown in FIG. **50**, a microphone does not have to be in the glasses. As shown in FIG. **50**, a microphone **4254** can be attached to the wire **4256** that connects the glasses to the portable device **4252**.

FIG. **51** shows one embodiment of the invention with a pair of glasses **4260** having a microphone **4262** coupled to a wire. The wire is connected to a portable device **4264** through a plug **4266**, and to the glasses **4260** through a jack **4268**. The portable device **4264** can be in a shirt pocket as shown. There can also be a clip **4265** to attach the wire to an article of clothing worn by the user.

In one embodiment, the glasses include electrical components for hearing enhancement functionalities. The electrical components enhance audio signals, such as audio signals received by a microphone at the glasses. Then the enhanced signals are sent to the speakers for the user to hear. In one embodiment, the hearing-enhancing electrical components include a processor. The processor can be the processor **4174** shown in FIG. **48**A. In this embodiment, the hearing-enhancing functionalities are performed through digitizing the corresponding audio signals. Then the processor, using digital signal processing techniques, operates on the digitized signals, such as boosting specific frequency bands.

In another embodiment, the hearing enhancing functionalities are provided by analog filter circuits. For example, analog filter circuits, using analog processing techniques, operate on the audio signals, such as boosting specific frequency bands.

In one embodiment, one hearing enhancement function includes amplifying the audio signals received in a frequency range between 500 Hz to 8 kHz. Typically, a user's hearing impairment is not the same across all audio frequencies. For example, in English, the user might be able to easily pick up the sound of vowels, but not the sound of consonants, such as "S" and "P". FIG. **52** shows a number of embodiments regarding frequency-dependent amplification of the received audio signals.

One approach for frequency-dependent amplification focuses on amplifying the higher audio frequency ranges. This approach assumes that hearing degradation typically starts at the higher audio frequencies, such as above 2 to 3 kHz. Hearing may need more assistance at the higher audio frequency range. For example, the audio signals received by a microphone can be amplified by 30 dB in the frequency range from 2 kHz to 4 kHz. Or around the entrance of the ear, the audio signals in that frequency range can be amplified to reach sound pressure level ("SPL") to about 80 dB. For lower audio frequencies, such as below 2 kHz, the amplification can be lower, such as 10 dB. Or for frequencies lower than 500 Hz, the maximum SPL does not have to be higher than 55 dB.

Another frequency-dependent amplification approach focuses on amplifying an audio frequency range that typically contains most of the information in everyday communication. For example, about 70% of the information in everyday human communication can be within the frequency range of 1 to 2 kHz. The frequency range that is selected to be amplified can be such a frequency range. Other frequency ranges are not selected for amplification.

There are benefits in embodiments where the ear canal remains open, with no plug inserted into the ear. For example, the user can be hearing the audio signals directly from the sender (i.e., without assistance provided by the hearing enhancement electrical components). If the embodiments further implement frequency-dependent amplification, for frequencies not within the ranges selected for amplification, the user can hear those signals directly from the sender. Lower frequencies, such as those below 2 kHz, are typically louder. Also, frequencies in the range, such as from 2000-3000 Hz, are typically in the natural resonance of the ear canal, which is typically around 2700 Hz. As a result, the intensity of these frequencies would be increased by about 15 dB. Further, with no plug inserted into the ear, there is typically no occlusion effect due to, for example, the user's own voice.

However, in embodiments with the ear canal not plugged/blocked/covered, signal processing speed of the frequency enhancement electrical components can be important. In such embodiments, the user can be hearing the audio signals both from the sender and the glasses' speakers. To prevent echoing effect, signal processing speed for hearing enhancement cannot be too low. Typically, the user would not be able to distinguish two identical sets of audio signals if the difference in arrival times of the two signals is below a certain delay time, such as 10 milliseconds. In one embodiment, the hearing enhancement signal processing speed is faster than such a delay time.

In one embodiment, the user has the option of manually changing the amplification of the system. The system can have a general volume controller that allows the user to adjust the output power of the speaker. This adjustment can also be across certain frequency bands. For example, there can be three volume controls, each for a selected frequency band.

In another approach, amplification across frequencies is tailored to the hearing needs of the user. This tailoring can be performed through calibration. FIG. **53** shows a number of embodiments regarding calibration of a user's hearing, for example, across various frequencies and/or for different amount of amplification. Calibration enables the glasses to

determine (e.g., estimate) the hearing sensitivity of the user. Through calibration, the user's hearing profile can be generated.

The user can perform the calibration by himself/herself. For example, the audio frequencies are separated into different bands. The glasses generate different SPL at each band. The specific power level that the user feels most comfortable would be the power level for that band. Alternatively, the glasses could generate different tones in different frequency bands. The user could compare the tones and rate the perceived loudness. In this process, the glasses can prompt the user and lead him through the process interactively. Based on the measurements, the glasses could create a calibration curve, which becomes the personal hearing profile for that user. After calibration, signals received in different bands, such as by a microphone in the glasses, will be amplified or attenuated according to the hearing profile.

In another embodiment, calibration can be done through a web site. The web site can guide the user through the calibration process. The user can be sitting in front of a computer terminal that is connected through the Internet to the web site. The terminal includes a headset that produces audio sounds. Alternatively, the user could be wearing the glasses that are connected through a cable to the sound card of the computer. The headset (or the glasses) generates different SPL at different frequency bands to test the user's hearing. The specific power level that the user feels most comfortable would be the power level at that band for the user. After testing is done for all of the bands, based on the power levels for each band, the web site creates and stores the user's personal hearing profile. Alternatively, the calibration procedure could be done off-line, with software provided on a storage device, such as a disc. The software could be installed on the user's computer. After installation, the software can guide the user through the calibration process.

Note that the different calibration processes can also be done by a third party, such as an audiologist, for the user.

The user's hearing profile, which typically is represented as digital data, can be stored in the glasses, in a base, or in a portable device. After calibration, the hearing profile can be downloaded, from, for example, the above described terminal, into the glasses wirelessly, such as through Bluetooth, infrared or other wirelessly interconnection technologies, or through a wired connection. The hearing profile can alternatively be stored in a portable media storage device, such as a memory stick. The memory stick could be inserted into the glasses, the base, the portable device, or some other audio generating device, which desires to access the hearing profile and personalizes the amplification across frequencies for the user.

The glasses (or the base, or the portable device) can also periodically alert the user for re-calibration. The period can be, for example, once a year. Also, the calibration can be done in stages so that it is less onerous and/or less obvious that the user is wearing a hearing enhancing device.

In another embodiment, there can be many pairs of glasses. Each pair amplifies the received audio signals in a preset frequency range by a preset amount. For example, two pairs amplify two respectively different preset frequency ranges by 20 dB. In another set, each pair provides different amount of amplification for the received audio signals in the same preset frequency range. For example, the different amount of amplification ranges from 20 to 40 dB at 5 dB intervals for the preset frequency range of 2500 to 4000 Hz. At a store, a consumer can try out different glasses with different preset amplifications at the same or different preset frequency ranges, before buying the one the consumer prefers.

In another embodiment, there is an assortment of standard hearing profiles, such as **20** or so. The user would just pick the one that sounds best.

If the glasses include hearing enhancement capabilities, the hearing enhancement functions might be on continuously for a long duration of time, power consumption can be an issue. In yet another embodiment, the glasses also include electrical components that are for managing power consumption of other electrical components in the glasses, such as the components to enhance hearing or other functionalities in the glasses. The electrical component can be a power controller, a microprocessor, or the processor **4174** in FIG. **48**A. Such glasses can include power management software applications/processes to manage power consumption of the glasses.

FIG. **54** shows a number of embodiments for managing power consumption of the glasses. One embodiment includes a manual on/off switch, which allows the user to manually turn off the electrical components in the glasses as he desires. The on/off switch may not have to be on the glasses. It can be on a base or a portable device tethered to the glasses.

The operation of the electrical components can be on-demand. For example, the on/off switch can be voice activated. The glasses are trained to recognize specific recitation, such as specific sentences or phrases, and/or the user's voice. To illustrate, when the user says sentences like any of the following, the hearing enhancement capabilities would be automatically turned from the sleep mode to the active mode: What did you say? Louder. You said what?

In another embodiment of on-demand power management, the glasses can identify noise (e.g., background noise), as opposed to audio signals with information. To illustrate, if the audio signals across broad audio frequency ranges are flat (not deviate more than a preset threshold amount), the glasses could assume that the received audio signals are noise. In another approach, if the average SPL of the received audio signals is below a certain level, such as 40 dB, the glasses would assume that there are no audio signals worth amplifying. In yet another embodiment, when the amplitude or the power level of the received audio signals is below a certain threshold for a duration of time, at least some of the electrical components in the glasses can be deactivated. This duration of time can be adjustable, and can be, for example, 10 seconds or 10 minutes. In another approach, only when the signal—to-noise ratio of the audio signals in the ambient is above a preset threshold, would the deactivated electrical components be activated (i.e., awakened from the sleep mode, the reduced power mode or the standby mode). In any case, to deactivate, the glasses or the hearing enhancement capabilities can be placed into a sleep mode, a reduced power mode or a standby mode.

Another approach to manage power consumption can make use of a directional microphone. This approach can improve the signal-to-noise ratio. The gain at specific directions of such a microphone can be 20 dB higher than omni-directional microphones. The direction of the directional microphone can vary with application. However, in one embodiment, the direction of the directional microphone can be pointing forward or outward away from the user. The assumption is that the user typically faces the sender of the message, and thus it is the audio signals in front of the user that should be enhanced.

In yet another embodiment of power management, the amplification of the glasses on at least a range of frequencies depends on the ambient power level, or the noise level of the environment of the glasses. One approach to measure the noise level is to measure the average SPL at gaps of the audio signals. For example, a person asks the user the following question, "Have you left your heart in San Francisco?" Typically, there are gaps between every two words or between sentences or phrases. The glasses measure, for example, the root mean square ("rms") value of the power in each of the gaps, and can calculate another average among all of the rms values to determine the noise level. In one embodiment, the glasses increase the amplification so as to ensure that the average power of the output audio signals by its speaker(s) is higher than the noise level by a certain degree. For example, the average SPL of the output audio signals from the glasses is 20 dB above the noise level.

In another embodiment, if the average power level of the environment or the ambient noise level is higher than a preset threshold value, signal amplification is reduced. This average power level can include all the audio signals received by, such as the microphone(s) of the glasses. The rationale is that if the environment is very noisy, it would be difficult for the user to hear the audio signals from the other person anyway. As a result, the glasses should not keep on amplifying the audio signals independent of the environment. To illustrate, if the average power level of the environment is more than 75 dB, hearing enhancement amplification is reduced, such as to 0 dB.

In yet another embodiment, the glasses further include automatic activation/deactivation mechanism controlled by a sensor that determines whether the user is wearing the eyeglasses. A number of such being-worn sensor embodiments have previously been described, such as in U.S. patent application Ser. No. 11/078,855, filed Mar. 11, 2005, entitled, "EYEWEAR WITH RADIATION DETECTION SYSTEM," which is hereby incorporated by reference.

A number of embodiments have been described on hearing enhancement. In other embodiments, at least one electrical component in the glasses is for generating audio signals that do not originate from signals captured by the microphone(s) in the glasses. These audio signals can be known as other audio signals. FIG. **55** shows different embodiments of the sources of such other audio signals. These signals can originate from relatively private sources or public sources.

In one example of signals from private sources, the other audio signals originate from a phone call received by the glasses. Such a pair of glasses can include wireless communications electrical components of a phone. The phone can be a mobile telephone, a cordless phone, a speaker phone, a CB radio, a walkee-talkee, an intercom system or other types of phone. The wireless communications electrical components can be located in at least one of the temples of the glasses. Some of the electrical components of the phone can be in a base or in a portable device wired or wirelessly coupled to the glasses. The glasses can pick up signals from a caller, and the speaker(s) in the glasses produce the audio signals, or a representation of the audio signals, from the caller.

There can be an operation indicator on the frame of the glasses to indicate that there is an incoming call. The indicator can be based on, for example, sound, light or vibration. In one embodiment, the indication is based on light, and is located on the inside of a temple close to the hinge of that temple. Such an operation indicator can be implemented in a variety of ways, such as with a light emitting diode (LED). There can be one LED coupling to more than one optical fiber, with each optical fiber guiding the light from the LED to different areas of the frame. In the case of a LED, the operation indicator is a light source, and can produce light of the color of the LED. In another embodiment, the operation indicator could represent a small text display, such as a liquid crystal display (LCD). The indicator can also be a signal light.

In one embodiment, activation/deactivation of the phone is based on whether an incoming call is present. For example, on receiving an incoming call, the glasses can automatically activate (or wake-up) to engage in wireless communication. Activation/deactivation can also be triggered by a button provided on the frame of the glasses. The button can serve to accept or drop a call. One advantage of providing activation/deactivation is that the glasses are able to be power managed so that power consumption is reduced and the life of power sources, such as battery life, is extended.

FIG. **56** is a flow diagram of call processing **4300** according to one embodiment of the invention. The call processing is performed using glasses disclosed in different embodiments that have wireless communication capabilities. For example, the glasses can be based on the glasses shown in FIG. **42** or **50**.

The call processing begins with a decision **4302** that determines whether a call is incoming. When the decision determines that a call is not incoming, then the call processing waits for such a call. Once the decision **4302** determines that a call is incoming, the glasses are activated **4308**. Here, the wireless communications capability of the glasses is activated (e.g., powered-up, enabled, or woken-up). The user of the glasses is then notified **4310** of the incoming call. In one embodiment, the notification to the user of the incoming call can be achieved by an audio sound, such as a ringer, produced by the glasses (via a speaker). Alternatively, the user of the glasses could be notified by a vibration (such as by a base tethered to the glasses), or a visual (e.g., light) indication provided by the glasses.

A decision **4312** then determines whether the incoming call is to be answered. For example, the user can push a button to indicate that the user wants to answer the call. When the decision **4312** determines that the incoming call is not to be answered, the glasses can activate a voice message informing the caller to leave a message **4314** or instructing the caller as to the unavailability of the recipient.

On the other hand, when the decision **4312** determines that the incoming call is to be answered, the call can be answered **4316** at the glasses. The user of the glasses is accordingly able to communicate **4320** with the caller by way of the glasses and, thus, in a hands-free manner.

A decision **4322** then determines whether the call is over (completed). When the decision **4322** determines that the call is not over, the call processing returns to repeat the operation **4320** and subsequent operations so that the call can continue. On the other hand, when the decision **4322** determines that the call is over, then the glasses can be deactivated **4324**, and the call is ended. The deactivation **4324** of the glasses can place the glasses in a reduced-power mode. For example, the deactivation **4324** can power-down, disable, or sleep the wireless communication capabilities (e.g., circuitry) of the glasses. Following the operations, the call processing for the particular call ends.

In an embodiment where the glasses operate as a wireless headset of a portable device (e.g. a cell phone), a wireless link can be established between the headset and the portable device if the incoming call is to be answered. The wireless

link is, for example, a radio communication link such as utilized with Bluetooth or Wi-Fi networks. Thereafter, communication information associated with the call can be exchanged over the wireless link. The portable device receives the incoming call, and communicates wirelessly to the glasses such that communication information is provided to the user via the glasses. When the decision determines that the call is over and the glasses are deactivated, the wireless link is also ended **4326**.

Regarding the hearing enhancing capabilities described, in one embodiment, when there is an incoming call, hearing enhanced capabilities are deactivated, and the glasses receives the incoming call. In another embodiment, when the user wants to receive the incoming call, one or more embodiments of the hearing enhanced capabilities enhance the audio signals from the incoming call.

One advantage of cell phones is that you can make calls anywhere you can get a signal. However, one disadvantage is that you might be making a call in a noisy environment. In one embodiment, the glasses also include electrical components for noise cancellation. Such noise cancellation functionalities can be activated during a phone conversation.

In one approach, noise cancellation is achieved through a first and a second directional microphones. The first one points at the user's mouth, and the second one points away. For example, the first one can be at one of the hinges as shown in FIG. **42**, whose directionality favors sound arriving from the user. There can also be a tube from the first microphone to or towards the mouth of the user, to guide the sound from the mouth to the microphone. The second microphone can be in the vicinity of the other hinge, whose directionality favors sound arriving in front of or outside of the user. Signals received from the second microphone are subtracted from signals received from the first microphone before the audio signals are further processed for transmission as the message from the user.

Referring back to FIG. **55**, other examples of audio signals originating from private sources include the other audio signals originating from different types of audio players, such as televisions, stereo systems, media asset players, or radios. The audio players can be in the glasses. In other embodiments, at least some of the electrical components of the audio players can be in a base tethered to the glasses, or in a portable device wired or wirelessly coupled to the glasses. For example, the other audio signals can originate from a portable device, which might produce, receive or play audio content. The audio content is then transmitted to the eyeglasses in a wired or wireless manner. The eyeglasses serve as a receiver of the audio content from the portable device and reproduce the audio signals for the user.

The glasses with the call processing ability perform two-way communications. In the embodiments of the glasses operating as audio players, the glasses perform one-way communications (or at least substantially one-way communications).

As an example of audio player being a stereo system, a pair of glasses includes electrical components of a headset for wirelessly receiving audio signals. Assume the user is working in the backyard and the stereo system is in the living room. The music from the stereo can be wirelessly transmitted to the glasses or to a portable unit carried by the user, which can re-transmit the music to the glasses wired or wirelessly. The speakers in the glasses can generate the music for the user to enjoy. Based on this technique, the user can enjoy the music without the need to crank up the volume of the stereo system.

In another example of an audio player, a pair of glasses includes a multimedia asset player, such as a MP3 player.

FIG. **57** shows some of the electrical components for an MP3 player **4340** according to one embodiment of the invention. The player **4340** includes a speaker **4342** and a data bus **4343**, which facilitates data transfer among, for example, a processor **4344**, a storage device **4345**, and a coder/decoder (CODEC) **4346**. The processor **4344**, which can be a microprocessor or controller, controls the operation of the player **4340**. The storage device **4345** stores the multimedia assets, such as MP3 files, or other types of media data that are appropriately formatted. In one example, the MP3 files are digitally encoded songs or other types of audio signals. The storage device **4345** can include a number of separate storage elements. For example, the device **4345** can be a flash memory device, or a minidisk device, and a cache, which can improve the access time and reduce power consumption of the storage device **4345**. The storage device **4345** typically also includes a Read-Only Memory (ROM), which stores programs, utilities or processes to be executed in a non-volatile manner. The player **4340** can also include a RAM, such as for the cache.

Once a media asset, such as a song, is selected to be played, the processor **4344** supplies the asset to the CODEC **4346**, which decompresses the asset and produces analog output signals for the speaker **4342**. In one embodiment, the bus **4343** is also coupled to an input/output device **4347**, which could, for example, allow a user to upload songs in the glasses to an external instrument, such as a computer; or download songs from the instrument to the glasses.

There are different approaches to select a song. In one embodiment, the media assets/songs can be categorized in the asset player. The categorization can be based on the names of artists, albums and/or songs. The categorization can be hierarchical, with multiple levels in the hierarchy. To illustrate, assume that there are three levels. The top level can be the name of a singer; the second level can be the time periods when the assets were produced, and the third level can be the names of the songs. The entries, such as the name of the singer, can be abbreviated. There can be a small display and a control knob to allow a user to scroll down entries in a level. By pushing the knob, the user selects an entry, which can lead the user to a lower level. There can be an entry for moving up a level also. In another embodiment, the display is a touch-screen display, allowing entries to be entered directly on the display. In yet another embodiment, entries can be selected based on voice recognition.

All of the electrical components of the asset player, such as the MP3 player, do not have to be fully embedded in the glasses. In one embodiment, at least a portion of the MP3 player can be coupled to the glasses through a connector at the glasses. FIG. **58** shows a card connector **4350** to receive a card **4352**, such as a removable media card (e.g., memory card). There can be a cover **4354** to secure the media card in place after it is inserted into the card connector. The cover **4354** can also protect the card once the card is in the card connector. The connector **4350** can be, for example, at a broad side of a temple **4356**, as shown in the figure. The card can be for an MP3 player. It can be a memory card for a MP3 player, with the speaker of the player in the temple **4356**. The speaker can play the multimedia assets accessed from the card through the connector. In another embodiment, some of the electrical components of the different types of audio players can be in a portable device, wired or wirelessly coupled to the glasses.

FIG. **42** shows two speakers, one speaker at one of the temples. In embodiments regarding generating other audio

signals, the two speakers can provide stereo effects. There can also be more than one speaker at each temple. The glasses can provide four or more speakers to give a high fidelity sound or a surround sound effect. For example, each temple can include one speaker close to the hinge, and one speaker close to the tip of that temple or its temple tip. In one embodiment, a temple tip is separable from its temple. In other words, the temple tip is a replaceable part. In another embodiment, a temple tip is an integral part of its temple. The different speakers can generate different portions or sections of the sound. Further, if a base or a portable electronic device is coupled to the glasses, the base or the portable electronic device can contain another speaker, such as a base or woofer speaker. Such embodiments enable the glasses to provide a personal high-fidelity sound or a surround-sound environment.

In one embodiment, the audio player can be a radio. The glasses include the electrical components of a radio. There can also be switches on the glasses to control the operation of the radio. For example, one switch is an on/off switch, which can also change the volume of the radio. This switch can be a roller switch or can be based on two switches (one for moving up and the other moving down). Another switch can be a push button, which when pushed will reset the radio to a specific station, such as 88 MHz. A third switch is another push button, which when pushed will scan up to the next station, relative to the previous station. Different types of control knobs or switches will be further described below.

In one embodiment, the radio is a personalized radio that is personalized to the user. For example, the radio keeps track of at least one preference of the user regarding audio signals from the radio received by the user. FIG. **59** shows a process **4375** according to one embodiment for a personalized radio. Initially, a pair of glasses according to the invention receives **4377** a piece of music from a radio station. That piece of music is stored **4379** in a buffer or a temporary storage area. This temporary storage area can be in the glasses or tethered/coupled to the glasses. The piece of music is also sent **4381** to a speaker in the glasses.

Assume that the user likes the music. Based on a preference indicator, the user shows his preference. After the glasses receive **4383** an indication that the user likes the music, the glasses determine **4385** the song corresponding to the indication. That piece of music can then be moved **4387** from the buffer to a permanent storage area, such as into a flash memory. The beginning and the end of the piece of music can be identified based on additional information embedded with the piece of music. There can be meta data tied to the music keeping such additional information. With the piece of music stored in the permanent storage, the user can subsequently access it as desired.

There are different ways to determine the song or the content being played by the radio being the one preferred by the user. For example, one way/rule is that when the user pushes a specific button (a preference button) on the glasses or voices his preference, the song (or media asset or media file) that is being played at that point in time is the one the user likes. Since an operating system can be responsible to send the music to the speaker, the operating system knows what song is being played at that time. Based on the rule, the song of preference is determined when the button is pushed. Another rule is that when the user shows his preference, and there is no song being played at that instance, the song immediately preceding the break is the song of preference.

In another embodiment, the glasses can get **4389** an identification for the song the user likes. For example, the glasses can ask the user to provide an identification for the piece of music. This identification can be the type of music, the name of the singer/artist, the name of the music, the name of the album or other identification. In another embodiment, there can be meta data embedded, such as in the beginning part of the music (or media asset). Having such meta data embedded is not uncommon for music in digital format. The meta data can include identifications for the music. The glasses can get such identification. Based on the identification, the song is categorized **4391** accordingly, such as grouped with other songs having the same identification. Such categorization process would enhance the ease of accessing the song by the user at a later time.

In one embodiment, when the user activates the different types of audio players, the hearing enhancement mode is deactivated. In another embodiment, when the user activates the different types of audio players, one or more features of the hearing enhancement capabilities operate on the audio signals from the audio players. In other words, different embodiments of the hearing enhancement capabilities previously described can be activated or deactivated on the audio signals from the different types of audio players.

Referring back to FIG. **55**, regarding public use, the audio signals generated by the speakers can originate from a public source. The public source can be a source that generates the audio signals for many people, or for people in a public environment. For example, the user can be at a conference or a theater. In one embodiment, the glasses can be coupled to the conference microphone or the theater speaker wirelessly, and are capable of capturing the audio signals therefrom. Again, the coupling can be through a portable device wired or wirelessly connected to the glasses. Then the glasses re-generate the corresponding audio signals for the user. Again, different embodiments of the hearing enhancement capabilities previously described can be activated or deactivated on the audio signals from the public sources.

There can be one or more control knobs or switches at the glasses for controlling the operation(s) of the glasses. FIG. **60** shows a number of attributes **4400** regarding control knobs. The knobs can be of different physical structure **4402**. For example, a control knob can be a roller, a switch or a push-button. A control knob serving as an up/down controller can use two buttons (one for up and the other for down), or a roller (rolling in one direction being up and the other direction being down).

A control knob can include additional intelligence **4404**. For example, a push-button control knob can serve different purposes depending on the duration the knob is being pushed. If a user pushes it for more than three seconds, the knob serves as an on-off toggle switch for the glasses. In another example, a knob can serve multiple purposes, and the specific purpose depends on the number of times the knob is pushed non-stop.

A knob can also be programmed by a user. A user can connect the glasses to a computer and program the knob accordingly. For example, one can program a knob such that if the knob is pushed for more than three seconds, the knob would serve as an on/off switch for the glasses.

The location **4406** of a control knob can vary for different applications. A control knob can be located on the glasses. A control knob can be on the top, the side or the bottom of a temple of the glasses. A control knob can be located at the inside of a temple facing the user.

Assume that there are a number of control knobs and all of them are on the edges of a temple, except one. By being at a position substantially different from other control knobs,

this knob can serve a specific purpose. For example, it can be an on/off control knob for all of the electrical components in the glasses.

In yet another embodiment, a control knob can be located in a portable device wired or wirelessly coupled to the glasses, or in a base tethered to the glasses.

The number **4408** of control knobs can vary depending on operations. For example, there is an on/off control knob and a volume up/down control knob. If the glasses are used for cell phone headset applications, in one embodiment, there is also an answer/hang-up control push-button. If the glasses serve as a radio, in one embodiment, there is also a channel selection control knob, which can be an up/down controller, like two push buttons. If the glasses serve as a CD player, in one embodiment, there is a play control knob, a stop control knob, and a skip forward/backward control knob. If the glasses serve as a multimedia asset player, such as a MP3 player, in one embodiment, there is a skip-forward/backward-song control knob and a select-song-to-play control knob.

In a number of embodiments described, a pair of glasses can serve different applications. For such embodiments, a switch on the glasses (a base or a portable device coupled to the glasses) can also serve different functions, depending on the application.

Different types of switches are applicable for different applications. Additional disclosures on switches are in U.S. Provisional Application No. 60/583,169, filed on Jun. 26, 2004, which is hereby incorporated by reference.

Regarding power sources for electrical components, in one embodiment, the power sources, which can be batteries and/or solar cells, are in the glasses. In another embodiment, one or more batteries can be inserted into the glasses. The batteries can be of various sizes and types. For example, as shown in FIG. **61**A, a coin battery **4420** (e.g. CR1025) can be inserted into the tip section or the free end of one of the temples **4416**. FIG. **61**B shows the embodiment shown in FIG. **61**A with a bigger coin battery **4422** (e.g. CR2032) inserted into the slot. Since the size of the battery is bigger than the size of the slot, a portion of the battery **4422** sticks out of the slot. FIG. **61**C shows another embodiment of the glasses that include a slot/cavity to receive a battery adapter **4426**. The slot **4418** in FIG. **61**A can be the same as the slot **4424** in FIG. **61**C. The adapter **4426** can be the same size and shape of the battery shown in FIG. **61**A, and with two terminals, just like the battery. However, the adapter, by itself, is not an energy source. The adapter is connected to a cable **4428**, with at least two wires inside, one for each terminal of the adapter. The adapter **4426** is inserted into the cavity **4424** of the glasses, and is coupled through the cable **4428** to a case or a capsule **4430** that holds a battery **4432**. The two wires in the cable **4428** are for the two terminals of the battery **4432**. The size and capacity of the battery held by the capsule can be bigger than the coin battery, and could be less expensive than the coin battery. In one embodiment, the capsule **4430** holds an AA battery. Note that in one approach, the temple in FIG. **61**C is the same as the temple in FIG. **61**A. In yet another embodiment, the power sources are in a base or a portable device connected to the glasses through a wire connection, and the power sources can be rechargeable.

In a number of embodiments, some of the electrical components for hearing enhancement and/or for generating other audio signals are in a base tethered to the glasses. In other embodiments, some of the electrical components are in a portable device, wired or wirelessly coupled to the glasses. In yet other embodiments, all of the electrical components are in the glasses.

In different embodiments, the glasses can be a pair of sunglasses, auxiliary frames, fit-over glasses, prescription glasses, reading glasses, safety glasses, swim masks, or goggles, such as ski goggles.

In a number of embodiments, the frames of the glasses have more surface area than frames with minimal structure, such as those frames with lenses connected together by wires. For example, the temples of the glasses can have a taper profile. Each of the temples can be wider or broader when it is close to its corresponding joint. In one embodiment, the temple is wider or broader by spanning across a wider or broader area longitudinally down, creating a bigger surface somewhat parallel to the face of the user. FIG. **42** shows an example of such an embodiment.

In another embodiment, there can be a shield at least at one of the edges of each of the lens holders of the glasses. These shields can wrap around, or better conform to the profile of, the face of the wearer. The shields can be opaque. There can be transparent or translucent windows on these shields. To illustrate, in fit-over sunglasses, when worn over a pair of prescription glasses, such shields can go over or cover at least a portion of the pair of prescription glasses. Note that in one embodiment, a pair of glasses does not have to include lenses.

A number of embodiments have been described with electrical components in the temples of the glasses. In yet another embodiment, at least one electrical component is in other parts of the glasses, such as in a shield, the bridge or a lens holder of the eyeglasses.

A number of embodiments of glasses have been described where the glasses include hearing enhancement capabilities and can generate one or more types of other audio signals. Note that electrical components for such functionalities can be shared. For example, different functionalities can share the same power source, or the same processor/controller.

Though a number of embodiments of glasses have been described where the glasses with hearing enhancement capabilities also generate other audio signals, different embodiments of the glasses only have hearing enhancement capabilities. In yet other embodiments, the glasses do not have hearing enhancement capabilities, but generate other audio signals.

In one embodiment, the glasses function as a headset and are adaptable for different applications, such as hearing enhancement, communication (e.g. phone operation) or listening to other audio signals (e.g. MP3 operation). The user initially can use the glasses as the headset for a phone or an MP3 player. Later, as the user's hearing degrades, the user can use the glasses as the headset for hearing enhancement or hearing boosting. In any event, when a person is using the headset, a third party may not be able to tell whether the person is having his hearing enhanced, or listening to other audio signals.

With the glasses functioning as a headset, in one embodiment, the glasses can include a connector and two speakers, one at each temple, both electrically connected through a conductor embedded in the glasses. The conductor can be a wire, similar to the embodiments shown in FIGS. **46**A-**46**B. The connector can be located at the free end of one of the temples, such as the embodiment shown in FIG. **49**. The connector can be a standard connector, such as a 3-wire or three terminal plug, or a 3.5 or 2.5 mm male stereo miniphone plug. The three terminals can be for the two speakers and ground, with both speakers sharing the same ground. In one approach, the positive terminal of the left speaker is connected at the first terminal of the plug, the positive terminal of the right speaker is connected to the second

terminal of the plug, and the ground terminals of the speakers are connected to the third terminal of the plug.

The plug at the glasses can be used to receive stereo signals for the two speakers. The stereo signals can be from a separate audio source, such as an MP3 player or a radio. There can be an audio cord that has a male stereo connector at one end and a female stereo connector at the other. The female connector of the cord is for receiving the plug at the glasses, while the male connector of the cord is for inserting into the headset jack of the player or the radio.

The headset can be used as the headset for a cell phone. Phone calls can be made with the headset using a headset-to-phone cord. FIGS. **62**A-**62**B show two embodiments of such a cord. The cord includes a female stereo mini-phone jack at one end and a male stereo mini-phone plug at the other end. The three terminals at the stereo mini-phone plug can be designated as the m (microphone), s (speaker), and g (ground) terminals.

FIG. **62**A shows one approach **4450** for the wiring connections in a headset-to-phone cord. One end of the cord can have a female stereo mini-phone jack for connection to the plug **4452** at a temple tip **4454** of a pair of glasses. The female jack is not shown in FIG. **62**A. The other end of the cord **4450** has a stereo plug **4456**, with three terminals, the m **4460**, the s **4464** and the g **4462** terminals. The plug **4456** is for inserting into the headset jack of the phone. In the approach shown in FIG. **62**A, the two speakers in the glasses are connected in series, and the microphone **4458** for the phone is attached to the cord, similar to the microphone **4254** shown in FIG. **50**.

Regarding wiring connections in the cord **4450**, the microphone **4458** is connected with wires between the m **4460** and the g **4462** terminals for the user to speak into. Note that in this embodiment, the negative terminal of the microphone **4458** is extended through a wire to connect to the ground terminal **4462** within the plug **4456**. The positive terminal for one speaker is connected to the s **4464** terminal, and the positive terminal for the other speaker to the g **4462** terminal. The two negative terminals of the two speakers are connected together (such as inside the glasses) to complete the circuit. In this embodiment, both speakers are connected in series and the audio signals of the caller go through both of them.

FIG. **62**B shows another approach **4470** for the wiring connections in a headset-to-phone cord. In this approach, the two speakers in the glasses are connected in parallel. A microphone **4472** is connected between the m **4474** and the g **4478** terminals. The negative terminal of the microphone **4472** is extended through a wire to connect to the g **4478** terminal at a location within the plug **4480**. The positive terminals for both speakers are connected to the s **4476** terminal, and the negative terminals of both speakers to the g **4478** terminal. Again, the microphone **4472** is external to the glasses and is attached to the cord **4470**.

Based on such headset-to-phone cords, the glasses can be used as the headset of a telephone, such as a cell phone. Also, based on the headset-to-phone cords, the headset can be used for hearing enhancement, with the microphone in the cord, external to the glasses.

Note that the audio cord and the headset-to-phone cord can be combined. FIG. **63** shows a combined cord **4490** that can perform both functions. The example shown in FIG. **63** assumes the two speakers in the glasses being connected in parallel. Again the microphone is attached to the cord, external to the glasses.

As shown in FIG. **63**, one end of the cord can have a female mini-phone jack to be connected to the plug **4520** at a temple tip **4522** of a pair of glasses. That female jack is not shown in FIG. **63**. The combined cord **4490** includes a switch **4502**. One switch position is to connect the speakers to a stereo plug **4510**. This is the position where the cord **4490** functions as an audio cord. The other switch position is to connect the speakers to a stereo plug **4516**. This is the position where the cord **4490** functions as a headset-to-phone cord.

With the switch **4502** in the audio cord position, the right **4498** and left **4500** speaker terminals of the plug **4520** are connected to the right **4506** and the left **4508** terminals of the male stereo connector **4510**.

With the switch **4502** in the headset-to-phone cord position, the right **4498** and left **4500** speaker terminals are connected to the s **4514** terminal of the male stereo connector **4516**. The microphone **4492** is connected between the m **4494** and the g **4512** terminals of the stereo plug **4516**. When the plug **4516** is inserted into a phone jack, the negative terminal of the microphone **4492** is connected to the ground of the phone.

Instead of having just one connector at the glasses, there can be two connectors. Each connector can be located at one of the temple tip, and each connector can be connected to the speaker at that temple through, for example, a conductor (e.g. a wire) in the temple. In one embodiment, the connectors are standard 2.5 or 3.5 mm male mono mini phone plugs. Such glasses can be used to listen to stereo music based on a mono-plugs-to-stereo-plug adapter cord. FIG. **64** shows one embodiment of the wiring connections of such an adapter cord **4550**. At one end of the adapter cord, there are two female mono mini phone plugs. These plugs are not shown in the figure. Each plug connects to two wires, one signal wire and the other the ground wire. For example, a first female plug includes signal wire **4552** and ground wire **4554**; and the second female plug includes the signal wire **4556** and ground wire **4558**. Each pair of wires can be embedded inside a cable, with both cables forming part of a lanyard. The other side of the cord **4550** is a male stereo mini phone plug **4560**. Of the 3 connections at the male stereo mini phone plug **4560**, one can be connected to both of the ground wires **4554** and **4558**, and for the other two, one to each signal wires **4552** and **4556**. The male stereo plug **4560** can be used to receive stereo signals for the two speakers, or can be used as a plug to receive a telephone call, similar to the stereo plugs at the temples shown in FIGS. **62**A-**62**B. In this example, the male stereo plug is not at the glasses, but is external to the glasses, such as at the lanyard.

In the above examples on cords, the microphone, such as for a phone or for hearing enhancement, is external to the glasses. In other embodiments, the microphone is in the glasses. With the microphone in the glasses, in the embodiments shown in FIGS. **62**A-**62**B, the plugs at the temple tips are five terminal plugs, with the five terminals being the positive or the signal terminal for the left speaker, the positive or the signal terminal for the right speaker, the ground for both speakers, the microphone and the ground for the microphone. In the embodiment shown in FIG. **62**A, the ground for the microphone **4458** is connected to the positive terminal of the right speaker **4462** at the g **4462** terminal of the male stereo plug **4456** within the plug **4456**. In the embodiment shown in FIG. **62**B, the grounds of speakers and the ground of the microphone are all connected together at the g **4478** terminal of the male stereo plug **4480**.

With the microphone in the glasses, as for the embodiment shown in FIG. **64**, the plugs at the temple tips are four terminal plugs, with the four terminals being the signal terminal for a speaker, the ground for the speaker, the signal

terminal for a microphone and the ground for the microphone. The male stereo plug **4560** is replaced by a five terminal plug, with the five terminals being the signal terminal for the left speaker, the signal terminal for the right speaker, the ground for both speakers, the signal terminal for the microphone and the ground for the microphone.

In the above examples of the glasses functioning as a headset, one microphone is described. However, there can be more than one microphone. As described, additional microphones can provide additional benefits. For example, two microphones can be used for noise cancellation purposes. In another example, two microphones can be for stereo reception purposes with one microphone on the left side and the other on the right side of the user. For users with significant hearing loss in one of the ears, signals received from that ear can be routed to the speaker in close vicinity to the other ear. In any event, if there are two microphones, with both microphones in the glasses, and if there is just one connector at the glasses, the connector can have six terminals. The six terminals can be for the signal terminal for each of the speakers and the signal terminals for the two microphones, the ground for both speakers, and the ground for both microphones. If there are two connectors at the glasses, one at each of the temple tips, again with the microphones in the glasses, the two connectors can be four terminal connectors. Each set of the four terminals includes the signal terminal of the microphone and the signal terminal for the speaker at that temple, and their separate grounds. In these embodiments with more than one microphone, again, one can use a combined cord that has a switch so that the glasses with the combined cord are applicable as a headset for, such as, a phone, a hearing booster and an audio player.

Regarding the locations of the speakers, the speakers can be in the temples, similar to the embodiment shown in FIG. **42**. In another embodiment, as shown in FIG. **65**, a speaker **4577** can be in one **4575** of the temple tips.

In a number of embodiments, one or more speakers are embedded or partially embedded in the glasses. In one embodiment, instead of in the main body of the glasses, a speaker is, for example, at the end of a stub or an extension, extended from the main body of the glasses. The stub can extend from one of the temples of the glasses. There can be electrical wires inside the stubs to connect the speakers to other electrical component(s) in the main body of the glasses. The stubs can replace a number of the tube embodiments described by bringing the speakers closer to, or allowing the speakers to be inserted into, the ear canal of the user. In such embodiments, there may not be separate ear buds because the speakers themselves can be in structures that also serve as ear buds. Such ear buds with speakers can also be custom fitted into the ears of the user. Such ear buds can include venting structures to reduce to a certain degree the effects of occlusion.

In a number of embodiments with speakers embedded in the glasses, each speaker can have a tube extending towards an ear to guide the audio signals. The tubes can be permanently attached to the glasses. In another embodiment, the tubes are detachable from the glasses. There can be an extension **4579** with a hole at the glasses for a speaker **4577**, as shown in FIG. **65**. An external tube **4581** can be attached to or inserted into the extension **4579** for sound coupling into an ear. In the embodiment shown in FIG. **65**, the external tube **4581** extends from the back of an ear, over the top of the ear, and curls back towards the opening of the ear. Again, there can be an ear bud **4583** at the end of the external tube **4581** to further enhance sound coupling to an ear. Also, in this embodiment, a microphone **4585** can be in the glasses at a position further away from the lens holders of the glasses.

With ear buds in the ears, it may not be necessary to have temples extend behind the ears. FIG. **66** shows an embodiment with each of the free ends of the temples, such as the temple **4600**, having an ear bud **4602**. The speaker for the ear bud **4602** can be in the structure of the ear bud **4602**. The speaker can be away from the ear bud, such as inside the temple **4600** close to the hinge of the temple **4600**, but is audibly coupled to the ear bud. For example, the temple includes a tube or a tubular structure inside the temple **4600** to guide the audio signals from the speaker to the ear bud **4602** for the ear. In this embodiment, a microphone **4604** can be located in one of the temples further away from the free end of that temple. The pair of glasses can also function as a headset. If the headset is connected to a portable device through a cord **4610**, the glasses include at least one connector to receive the cord **4610**. In one embodiment, the connector **4606** at the glasses is a female connector. The cord **4610** for the portable device ends with a male connector **4608** to be inserted into female connector **4606** at the glasses. When the glasses are worn, both ear buds are inserted into the ears of the users. Together with the bridge (directly or indirectly through the nose pads) on the nose, and the ear buds inserted into the ears of the user, the glasses can be stably held on the head of the user. In the embodiment of a wired headset with one connector, when worn, the cord **4610** can drape behind one of the ears.

Regarding embodiments with ear buds at the free ends of the temples, in yet another embodiment, the ends of the temples are small and are made of soft materials. If the user chooses to wear such glasses, but does not want to use the speakers, the user has the option to comfortably wear the glasses with the ear buds positioned above his ears.

In one embodiment, the length of the tubes or the stubs is not fixed, but is adjustable. The tubes or the stubs are retractable and extendable, for example, similar to the embodiment shown in FIG. **44**. The positions of the tubes or the stubs also can be changed, for example, similar to the embodiment shown in FIG. **42**. Alternatively, the temples can be made of malleable materials to allow some adjustment to fit different users. Glasses with such flexibilities, if applied to the embodiments with ear buds at the free ends of the temples, are even easier to adjust to fit different users, for example, because one may only need to adjust the distance between the ear buds and the lens holders of the glasses.

In yet in another embodiment, a pair of glasses functioning as a headset with a speaker and a microphone further includes a camera, as shown in FIG. **67**. The glasses **4650** include a temple **4652** that has a microphone **4654**, a speaker **4656** and a camera **4658** with a connector **4660**. The connector **4660** is for connecting, for example, to a portable device that includes at least the power source for the glasses.

The camera **4658** is preferably a digital camera with an on/off switch **4662**. For example, the camera **4658** is a CCD camera with a CCD controller coupled to a CCD chip, a CCD memory device and a lens.

In one embodiment, with the connector **4660** connected to the portable device, when the switch **4662** is pushed on, the CCD chip takes a picture. The charges in the CCD chip are digitized and transmitted through the connector to the portable device, under the management of the controller. At least some of the charges can be temporarily stored in the CCD memory device, for example, to accommodate the differences in speed in taking pictures and sending the

pictures to the portable device through the connector. In this embodiment, images are permanently stored at the portable device.

In one embodiment, the glasses do not offer focusing capability. The CCD chip can be located, for example, at the focal point of the lens. In another embodiment, there is an image distance control knob. For example, a mechanical lever can be pre-programmed or pre-set to move the lens to one or more different positions. There can be just two positions. One position can be for close-up shots and another for distance shots, such as close-up being about 2 ft from the lens and the distant being about 6 ft away; or close-up being about 8 inches away and distant being about 2 ft away.

FIG. **67** shows one embodiment regarding the location of the camera **4658** at the end of the temple or arm **4652** of the glasses next to the hinge of the temple. The lens of the camera faces forward. In this situation, what the user sees is substantially what the captured image would be. In other words, in a general sense, what the user sees through the glasses is what the user gets, without the need for an additional view finder. With such an embodiment, it is relatively easy for a user to take pictures, hands-free, without the need for an additional strap for holding the camera.

The connector **4660** at the end of the glasses **4650** can be, for example, a 4-terminal connector, one for ground, one for power and the other two for transmit and receive signals. In another embodiment, the connector **4660** can be a 3-terminal connector, with the power line and one of the signal lines sharing one terminal.

Regarding the embodiment shown in FIG. **67**, the speaker **4656** can be in the glasses, with a tube **4666** and an ear bud **4668**, to help bring audio signals to the user. In one embodiment, the tube **4666** can be rotated at its end where it connects to the glasses.

In one embodiment, the CCD with the CCD memory device and the CCD controller are on the same integrated circuit.

The embodiment shown in FIG. **67** also includes a microphone **4654**. In one embodiment, the CCD memory device also stores audio signals from the microphone. For example, the memory device stores the last 15 seconds of audio signals. When the user takes a picture, the previous 15 seconds of audio signals can be coupled to the picture. The next 10 seconds of audio signals can also be coupled to the picture. The audio signals or the digitized version of the audio signals can also be transmitted to the portable device with the corresponding picture. In the future, if the user wants to view the picture, the audio signals can be played with the picture at the same time.

The electrical components in the portable device for the glasses with a camera can be incorporated in the glasses. For example, the power sources can also be in the glasses and the glasses do not have to include a connector. In one embodiment, the glasses include non-volatile memory to store at least a number of pictures. In another embodiment, the glasses further include a connector to receive a memory card, such as a flash memory device. One embodiment of such a removable card on a pair of glasses is shown in FIG. **58**, where the card **4352** can be a removable memory card. The card can be a standard memory card with a USB connector. Pictures taken can be stored in the removable memory card.

In yet another embodiment for the glasses with a camera, the glasses do not include a speaker or a microphone. The glasses include a temple that has a CCD controller coupled to a CCD chip, a CCD memory device and a lens. The temple also includes an on/off switch with a connector. The connector is for connecting, for example, to a portable device that includes at least the power source for the camera.

Additional disclosure on camera in glasses can be found in U.S. Provisional Application No. 60/583,169, filed on Jun. 26, 2004, which is hereby incorporated by reference.

A number of electrical components have been described. They can be on circuit boards, which can be made of flexible materials. They can be on a substrate. They can also be integrated into one or more integrated circuits.

Although a number of embodiments have been described of glasses with hearing enhanced and/or other audio signal generation capabilities, in one embodiment, the hearing enhanced and/or other audio signal generation capabilities are in another apparatus. When a person is using that apparatus, a third party again would not be able to tell whether the person is having his hearing enhanced, or listening to other audio signals. This again may be able to remove the stigma of wearing a hearing aid.

In a number of embodiments, the invention pertains to eyewear having an activity monitoring capability. Activity, such as motion, steps or distance, can be measured by an activity detector. The measured activity can then be used in providing activity-related information to a user of the eyewear. Advantageously, the user of the eyewear is able to easily monitor their degree of activity, without the need to carry a separate electrical device. In other embodiments, the invention can provide activity monitoring capability to products other than eyewear.

In one embodiment, the activity monitoring is provided by a pedometer. A pedometer can also herein be referred to as a pedometer system.

In one embodiment, all components for activity monitoring can be integrated with eyewear (e.g., eyeglasses), such as a frame (e.g., a temple of the frame) of the eyewear. As an example, the eyewear normally includes a pair of temples, and the components for activity monitoring can be embedded within one or both of the temples. In one implementation, all components for activity monitoring are integrated into a single temple of the frame of the eyewear. As an example, these components can be formed together on a substrate. The substrate with the components mounted and interconnected can be referred to as a module. Embedding such a module into the eyewear can thus provide the eyewear with activity monitoring capability with minimal disturbance to design features of the eyewear.

A first aspect of the invention pertains to eyewear having a pedometer (or pedometer system). The pedometer provides the eyewear with an activity monitoring capability.

FIG. **68** illustrates a pair of glasses **5100** according to one embodiment of the invention. The pair of glasses **5100** include a first lens holder **5102** and a second lens holder **5104**. The lens holders **5102** and **5104** are capable of receiving lens. The lens can be prescription lens or non-prescription lens. The first lens holder **5102** has a first side and a second side. The second lens holder **5104** has a first side and a second side. The pair of glasses **5100** also has a bridge **5106**. The bridge **5106** is coupled to the second side of the first lens holder **5102** and the first side of the second lens holder **5104**. The lens holders **5102** and **5104** and the bridge **5106** can be separate pieces or a single integral piece. The glasses **5100** can also be referred to as eyeglasses.

In addition, the pair of glasses **5100** includes a pair of temples, namely, a first temple **5108** and a second temple **5110**. The first temple **5108** is pivotally secured to the first side of the first lens holder **5102** by way of a joint (or hinge)

5112. The second temple **5110** is pivotally secured to the second side of the second lens holder **5104** by way of another joint **5114**.

Moreover, the pair of glasses **5100** further includes a pedometer **5116**. In this embodiment, the pedometer **5116** is embedded in the temple **5110**. As illustrated in FIG. **68**, the pedometer **5116** includes a display **5118** and a switch **5120** that are exposed at the inside surface of the temple **5110**. The display **5118** displays a visual indication of an output produced by the pedometer **5116**. In one implementation, the display **5118** is a liquid-crystal display. The switch **5120** can serve different functions depending on the embodiment. In general, various different types of switches can be used as the switch **5120**. In one implementation, the switch **5120** is a push-button switch that serves as an on/off button. In another implementation, the switch **5120** can be a slider switch. Different types of switches have previously been described in the related patent applications mentioned above and incorporated by reference.

In general, the pedometer **5116** is at least partially embedded in the temple **5110**. In the embodiment shown in FIG. **68**, the pedometer **5116** is embedded in the temple **5110** with the display **5118** and the switch **5120** being exposed. Other components of the pedometer **5116**, including various electrical components, are embedded in the temple **5110** and not exposed.

In the embodiment shown in FIG. **68**, the pedometer **5116** is in the temple **5110** of the pair of glasses **5100** at a region close to its corresponding joint **5114**. The pedometer **5116** faces the user when the user is wearing the pair of glasses **5100**. With the pedometer **5116** in that position, in some cases, the wearer (user) may be able to see the pedometer information being output by the display **5118** without the need to take the pair of glasses **5100** off.

Although this embodiment provides the pedometer **5116** in the temple **5110**, the pedometer **5116** could alternatively be embedded in other parts of the eyeglass frame. With proper design, the overall appearance of the pair of glasses **5100** can remain aesthetically pleasing, particularly when the pedometer **5116** is substantially embedded in the eyeglass frame (e.g., the temple **5110**).

FIG. **69** illustrates a temple **5200** according to one embodiment of the invention. The temple **5200** can, for example, represent another embodiment for the temple **5110** of FIG. **68**. In any case, the temple **5200** includes an inside surface **5202**. The inside surface **5202** has a removable cover **5204**. The removable cover **5204** serves to cover a cavity within the temple **5200** that includes electrical components associated with a pedometer. The removable cover **5204** has a display opening **5206** that aligns with a display of the pedometer, and a switch opening **5208** that aligns with a switch. When the removable cover **5204** is removed, the pedometer can be inserted into the cavity within the temple **5200**. However, with the removable cover attached, the pedometer is held within the cavity, yet the display of the pedometer can remain exposed because of its alignment with the display opening **5206** and the switch can remain accessible because of its alignment with the switch opening **5208**.

FIG. **68** shows an embodiment with a pedometer facing inward towards the wearer when the glasses are being worn. Alternatively, the pedometer could be facing out and the user can temporarily remove the glasses to read pedometer output.

There are a number of benefits of having a pedometer with a pair of glasses. For one, if the pedometer is in the glasses, one does not need to separately carry a pedometer. Also, with the pedometer in the glasses, a user may be able to see his progress just by moving his eyes. For example, the pedometer can have a display and the display can be located close to a hinge of a temple, facing the user when the glasses are worn. In such case, the user does not have to move his hands or other parts of his body to monitor his progress; he only has to move his eyes to see the display and to track his progress while exercising. Similarly, in an embodiment with the pedometer and a speaker in the glasses, a user can hear his progress without the need for the volume of the audio signals to be high because the speaker can be relatively close to the user's ear.

FIG. **70** is a block diagram of a pedometer system **5300** according to one embodiment of the invention. The pedometer system **5300** can also be referred to as a pedometer. The pedometer system **5300** is suitable for use as one implementation of the pedometer **5116** illustrated in FIG. **70**. The pedometer system **5300** includes a controller **5302** that controls overall operation of the pedometer system **5300**. An accelerometer **5304** provides an input data signal to the controller **5302**. The controller **5302** receives the input data signal from the accelerometer **5304** and determines whether the output information produced on a display **5306** should be altered or whether there should be an output on the display **5306**. The pedometer system **5300** also includes a switch **5308** and a power source **5310**. The switch **5308** provides an input control signal to the controller **5302**. In one embodiment, the switch **5308** can serve as an on/off switch. In another embodiment, the switch **5308** can provide a reset operation for the output of the pedometer system **5300**. In still another embodiment, the switch **5308** can be a light switch to provide light (e.g., back light) when activated so as to better illuminate the display **5306**. The display **5306** can, for example, be a Liquid Crystal Display (LCD) type display. The power source **5310** provides power to any or all of the controller **5302**, the accelerometer **5304** and the display **5306**. The power source **5310** can be implemented by a battery, kinetic energy device or solar cell, or some combination thereof. Although the switch **5308** is not shown as being coupled to the power source **5300**, in another embodiment, the switch **5308** could be interposed between the power source **5310** and the other electrical components of the pedometer system **5300** so as to provide a power-off mechanism.

More generally, the display **5306** can be an output mechanism for the pedometer system **5300**. An alternative output mechanism is a speaker. In one embodiment, the glasses (e.g., glasses **5100**) can include a speaker to provide an output of the pedometer system **5300**. The speaker can be attached to or substantially internal to one of the glasses (e.g., a temple of the glasses). The glasses can also include more than one speaker. The speaker(s) can provide an audio output for the benefit of the user of the glasses. The audio output can be a speech output corresponding to a pedometer output (e.g., distance, calories, etc.). The audio output could alternatively be a sound, such as a sound effect. For example, a first sound could be output to indicate a 10th of a mile increment, and a second sound could be output to indicate a mile increment.

In one embodiment, the pedometer is powered by a battery. The battery can, for example, be rechargeable by way of coupling to a charger through a connector at the glasses or by way of a solar cell. The solar cell can be coupled to or partially embedded in the pair of glasses. In one embodiment, the pair of glasses includes a hatch (e.g., removable cover) that can be opened to replace the battery which is embedded in the pair of glasses.

FIG. **71**A illustrates an electrical system module **5400** according to one embodiment of the invention. The electrical system module **5400** in this embodiment operates as a pedometer system (pedometer). The electrical system module **5400** includes a substrate **5402**. Mounted on a first side **5404** of the electrical system module **5400** is a display **5406** and a push-button switch **5408**. The electrical system module **5400** can, for example, be designed to be placed internal to a cavity within the frame of a pair of glasses.

FIG. **71**B illustrates a second side **5410** of the substrate **5402** of the electrical system module **5400**. The second side **5410** of the substrate **5402** includes a controller chip **5412**, an accelerometer **5414**, and a battery **5416**.

FIG. **71**C illustrates a side view of the electrical system module **5400**. The electrical system module **5300** is generally small so as to fit within an eyeglass frame, as discussed above with reference to FIGS. **68** and **69**. In this embodiment, the electrical system module **5300** has electronic components on both sides of the substrate **5402**; however, it should be understood that all the electrical components could be on a single side, which could provide a profile with reduced thickness. The substrate **5402** is for example, a Printed Circuit Board (PCB) or a tape for holding integrated circuits. In one example, the substrate **5402** can be made of epoxy and glass, and in another example, the substrate **5402** can be made of Kapton®, a brand of polyimide.

Further, in some embodiment, the substrate (e.g., PCB) can conform to the size and shape of the temple. FIG. **71**D illustrates a temple **5450** according to one embodiment of the invention. The temple **5450** can, for example, represents another embodiment for the temple **5110** of FIG. **68** or the temple **5200** illustrated in FIG. **69**. In any case, the temple **5450** includes an inside surface **5452**. The inside surface **5452** has a display opening **5454** that aligns with a display of the pedometer (e.g., display **5406**), and a switch opening **5456** that aligns with a switch. Both the display and the switch are mounted on a substrate. In this embodiment, a substrate **5458** for the pedometer is housed internal to the temple **5450**. Moreover, in this embodiment, the substrate **5458** is not rectangular but instead conforms to the configuration of the temple **5450**. In particular, the substrate **5458** has a forward end **5460** and a back-end **5462**. In this embodiment, the back-end **5462** has a substantially reduced height as compared to the forward end **5460**. There is also a curved region **5464** of the substrate **5408** to transition between the forward end **5460** and the back-end **5462**. A cavity is provided internal to the temple **5450**. In one embodiment, the cavity is designed to receive the substrate **5460**. Hence, in one embodiment, the cavity also has a non-rectilinear configuration. Since temples are often small and have a low profile, the substrate needs to likewise be small and have a low profile. However, a substrate with a rectangular configuration may not have enough surface area for all the electrical components to be provided on the substrate. However, by using a non-rectangular configuration for the substrate, there can be more surface area for the substrate. Additionally, in this way, an electrical system module (e.g., pedometer system) can be provided within the glasses with reduced impact on aesthetic design.

FIG. **72**A illustrates representative output data for a pedometer system (pedometer) according to one embodiment of the invention. The output data can, for example, pertain to one or more of: steps taken, distance traveled, calories consumed, duration of activity, and speed of travel. The output data can be presented in a visual manner on a display of a pedometer system, such as the display **5118**, **5206**, **5306** or **5406** noted above. Alternatively, the output data can be presented in an audio manner via a speaker. The display and/or the speaker can be attached to or at least partially embedded within the pair of glasses having the pedometer system.

FIG. **72**B illustrates representative input data for a pedometer system according to one embodiment of the invention. The input data can, for example, pertain to data that is input to the pedometer system to facilitate its operation. For example, the input data can include one or more of: stride information, time (i.e., current time), and/or weight of user. Although providing input data to the pedometer system is not necessary, for some embodiments, it is helpful to producing output data that is more accurate.

As noted above, the pedometer system can provide different types of outputs. For example, the display can show step count, i.e., a count for the number of steps taken by the user. The glasses can have an on/off switch to activate/deactivate the pedometer system. When the pedometer system is turned on, it can keep track of the number of steps taken by the user.

Another type of output can be distance traveled. The pedometer system can include a switch for stride-length adjustment. The switch can have three (3) positions—a long, a medium and a short stride, each with its corresponding distance. The user can set the switch at one of the positions. The pedometer system (e.g., controller **5302**) can then multiplied that distance by the step count to generate the distance traveled. In another embodiment, the user can enter his average stride distance into the glasses to provide a more accurate distance calculation. This can be done directly (e.g., inches, feet or centimeters) or indirectly (e.g., steps per 10th of a mile or steps per kilometer).

Another type of output is time elapsed (i.e., duration). The pedometer system can include a timer to show time elapsed. With the timer, the controller can also divide distance traveled by time elapsed to provide a speed output or an average speed output.

The distance traveled could represent the horizontal distance traveled or the vertical distance (i.e. elevation) traveled. As one example, a pedometer can provide an estimate of distance traveled The speed can be acquired or determined, such as the rate of movement along the horizontal distance and/or the vertical distance traveled. In one embodiment, the pedometer system can further include an altimeter to measure vertical distance traveled. As another example, calories consumed can be determined (e.g., estimated) based on various physical and/or environmental conditions that can be measured or determined.

In one embodiment, the person can enter his weight into the pedometer. Based on the weight and the distance traveled, the pedometer can measure the number of calories burned, which are proportional to the weight and the distance traveled.

FIG. **73** is a flow diagram of a distance output process **5600** according to one embodiment of the invention. The distance output process **5600** is, for example, performed by a pedometer system, such as the pedometer **5116** or the pedometer system **5300**. The distance output process **5600** operates to determine and then output a distance amount associated with a user of the pedometer (pedometer system). As noted above, a pedometer can output a distance traveled by the user of the pedometer.

The distance output process **5600** initially reads **5602** activity sensor (e.g., accelerometer) data. A distance traveled is then computed **5604** based on the activity sensor data. Next, the distance traveled is added **5606** to the total distance traveled. As a result, the total distance is updated to

include the incremental distance that the user has traveled since the last instance of the distance output process **5600**. The updated total distance traveled is then displayed **5608**.

Next, a decision **5610** determines whether to update the distance being monitored by the distance output process **5600**. When the decision **5610** determines that an update is needed, the distance output process **5600** returns to repeat the operation **5602** and subsequent operations so that a next distance travel can be computed and processed in a similar manner. It should be noted that the distance traveled being displayed **5608** can be rendered in any sort of units, including steps, miles, feet, meters, etc.

On the other hand, when the decision **5610** determines that an update is not yet needed, a decision **5612** determines whether a reset has been requested. When the decision **5612** determines that a reset has not been requested, then the distance output process returns to repeat the decision **5610** to again evaluate whether an update is needed. Here, the activity monitoring hardware can be inactive for a period of time (e.g., a delay time). This inactive period can provide low power operation of the activity monitoring hardware. In general, the less often updates occur, the less power consumed. Alternatively, when the decision **5612** determines that a reset has been requested, the total distance traveled is reset **5614** (i.e., cleared or set to zero). Following the operation **5614**, the distance output process **5600** again returns to repeat the operation **5602** and subsequent operations.

Pedometer designs can have various different structures. In one embodiment, an advantage to have a pedometer in the glasses can be due to the structure of one type of pedometer. In one approach, a pedometer includes a weight and a spring. In one embodiment, the pedometer can also include an LED, a photodetector and a controller. The weight is at the end of the spring, which can be a leaf spring. The weight with the spring have a resonant frequency that can be in the range of normal walking pace, such as 60-120 steps/minute. At that frequency, the weight with the spring will resonate. The resonance can be critically damped, such as by allowing the weight to go up and down beyond a threshold, but only once per step of the user. Normally, the photodiode receives light from the LED. When the weight goes beyond the threshold, it can block the light from the LED from reaching the photodiode. By measuring (e.g., counting) the number of times light is blocked and unblocked, a controller would be able identify the number of steps the user has walked. Based on such a structure, in one embodiment, for optimal performance, the orientation of the up-down motion of the weight should be substantially vertical. If a pedometer is a device you can clip onto a piece of clothing, a user can clip it on such that the orientation of the up-down motion of the weight is horizontal, which causes the performance of the pedometer to be substantially degraded. Glasses are usually worn in a standard position. The position, including the orientation, of the pedometer can thus be fixed relative to the glasses. Then, the orientation of the up-down motion of the weight can be fixed to be substantially vertical when the glasses are worn, or be substantially perpendicular to the orientation of the bridge of the glasses. This is another advantage of having a pedometer in the glasses in a number of embodiments.

In another embodiment, the pedometer can be automatically adjusted based on the types of exercise the user is engaging in, such as whether she is walking or jogging. For example, the resonance frequency, stride, or other parameter can be changed to provide a more accurate correspondence to whether the person is walking or jogging. There could alternatively be a switch that allows the person to change the pedometer from the walking mode to the jogging mode.

The activity monitoring can but need not be performed by a pedometer (pedometer system). That is, other activity monitoring systems besides pedometer systems can be used. In other words, a pedometer system can be replaced by an activity monitor. An activity monitor is a monitor of general activity. For example, the activity being monitored can correlate to movement of its user. Such movement may or may not correspond to distance traveled. For example, a pedometer system measuring steps taken by a user while working out at the gym would typically imply that the user is nevertheless active, albeit in a relatively confined area. In contrast, an activity monitor could better understand that the user is getting up and down many times and otherwise involved in a substantial amount of movement while at the gym. Similarly, homeowners cleaning the house engages in a lot of activity, but perhaps not requiring a comparable number of steps, as a jogger.

In one embodiment, the activity monitor can be partially or completely embedded in a pair of eyeglasses. Typically, the activity monitor includes an activity sensor and electronic circuitry in the pair of eyeglasses that monitors the activity, manipulates the monitored signals and provides an output of an activity indication to the user or interested party.

The activity sensor can sense user activity level. As an example, the user activity level can be used to provide a lifestyle indication. For example, a lifestyle indication can indicate to the user whether the user was active today or, alternatively, lazy today. The lifestyle indication can be displayed as a text or graphic symbol to inform the user or others of the activity level. For example, the lifestyle indication can be displayed by an output device (e.g., a LCD or LED display). The output device can be integrated with an eyeglass frame (e.g., at a temple portion of the eyeglass frame).

The activity level can pertain to a period of time, such as last 5 minutes, last hour, last 8 hours or last 24 hours. In one embodiment, within the time period, electronic circuitry can measure (e.g., count) motion (e.g. vibrations), such as via an accelerometer or other motion indicators. When motion exceeds a threshold, a count can be increased. The count total for the period of time can then be compared to an index. The index can then provide an activity level, which can be numeric (e.g., 1-10 rating), textual (e.g., lazy, slow, moderate, active) or graphical. For example, in a given day, a count can be accumulated, and then the activity level can be re-determined based on the accumulated count at the end of each day. The following table is representative of the correspondence between count value, thresholds (TH), and activity level.

Count	Activity Level
<or = TH1	Lazy
>TH1 but < or = TH2	Slow
>TH2 but < or = TH3	Moderate
>TH3	Active

These activity levels can also be linked to numerical or graphical indicators which can be displayed on an output device. The output via the output device can provide a current activity and/or a cumulative activity level, which can be a cumulative daily activity level. The output can also be displayed relative to one or more benchmarks.

When there is no motion or essentially no motion, the monitoring system can power-off or enter a low-power mode, and thus stop performing activity processing or providing any activity indication at an output device.

In one embodiment, the activity sensor can be implemented using an accelerometer or a vibration sensor. In another embodiment, the activity sensor can be implemented using a pedometer, which can be either a mechanical or electrical pedometer. In yet another embodiment, the activity can be implemented using a GPS receiver. In still other embodiment, the activity sensor can be implemented using a combination of any of the foregoing. In yet another embodiment, a plurality of activity sensors can be utilized. Such multiple activity sensors can be processed separately or in combination.

In one embodiment, the activity sensor can be used to measure distance traveled. In another embodiment, the activity sensor can acquire a position. The relative change in position over time can be used to determine a distance traveled. Then, the distance traveled over time can be used to correlate to an activity level. The activity level can then be displayed in any of the various ways noted above. In other embodiment, the activity sensor can be used to measure minimum activity (e.g., sleeping). In still another embodiment, the activity sensor can be used to measure velocity or acceleration.

In one embodiment, an activity monitoring system which provides monitoring and display of activity information can be at least partially embedded in a pair of eyeglasses. In another embodiment, the activity monitoring system can be at least partially embedded in at least one temple of a pair of eyeglasses. Optionally, the pair of glasses can further include one or other sensors discussed herein or in related applications. At least one of the sensors can be remote from the pair of eyeglasses (and utilizes wireless or wired communication to interact).

In yet still another embodiment, the activity monitor can operate as a calorie counter. In such case, data from an activity sensor can be converted into estimated calories consumed by, for example, the wearer of the glasses. The glasses may permit a user to enter his weight, or there can be a series of glasses each being utilized for different weight ranges. An output device provided with a pair of such glasses can inform the user of the calories consumed, such as throughout the day. The glasses can also include a reset button or on/off switch so that calorie count can be cleared. The glasses might also store calorie information for a plurality of days and permit uploading such data to a computer (wirelessly or via a connector provided with the glasses).

There can also be a memory device to keep track of the activity information for a number of days. The activity monitoring system can include or couple to a controller that controls storage and retrieval of the information to and from the memory device.

In one embodiment, the activity monitoring system (e.g., pedometer) has an automatic off feature that allows a controller to automatically turn off or deactivate the activity monitoring system if the activity monitoring system does not sense any steps taken by the user for a predetermined period of time, such as two (2) minutes.

In different embodiments, the glasses can be more geared towards sports. The glasses can be a pair of sports glasses, swimming goggles, or protective goggles for playing different types of sports, such as racquetball.

In still another embodiment, a pair of eyeglasses can include or utilize a sensor to serve as a stress monitor. For example, stress can be estimated in view of blood pressure which can be evaluated with a blood pressure sensor and/or in view of pulse rate which can be evaluated with a pulse rate sensor. As another example, blood pressure or pulse rate sensors together with activity can be used to estimate stress.

The activity monitoring system can also include one or more switches with the eyewear. The switches can, for example, facilitate user input or control with respect to the activity monitoring system. For example, the switches can provide one or more of on/off, reset, on, on (and reset), and calibration. The activity monitoring system can also provide a user with an indication of whether the system is currently on or off, such as by a graphical image on a display device or by a LED. The one or more switches can also be used to change operational settings, such as threshold levels, output type, user preferences, user physical characteristics (e.g., stride, weight), operational mode, or activation/deactivation of auxiliary sensors, if any.

The activity monitoring system can have a "being-worn" switch. In one embodiment, the "being-worn" switch enables the activity monitoring system to automatically determine when to monitor activity and when not to monitor activity. In particular, the activity can be monitored when an eyeglass frame having the activity monitoring system is "being-worn" and not when the eyeglass frame is not "being-worn." The "being-worn" switch can be positioned in the temple portion with the other components of the activity monitoring system. In one embodiment, the activity monitoring system is provided, as a module as noted above, and which further includes a switch. The switch can, for example, be a "being worn" switch. By having the switch integral with the module, the manufacture and assembly of the end-product having the activity monitoring system can be simplified. As examples, the "being-worn" switch can be an optical, magnetic or mechanical switching device.

The "being-worn" switch can make use of the situation that the temples are in an open position when the eyeglass frame is being worn, and in a closed position when not being worn. In one embodiment, the "being-worn" switch can be positioned at a temple proximate to a region that couples the temple to its corresponding lens holder. For example, the activity monitoring system (e.g., module) can be provided within the temple region near the end of the temple so that the "being worn" switch is adjacent the lens portion of the eyeglass frame.

The "being worn" switch can also be used by a user to signal the activity monitoring system to provide its output at an output device, such as a display device. For example, when the "being worn" switch is initially closed (i.e., being worn), the activity monitoring system can output its text or graphical output to the display device. Typically, the displayed output would be displayed only for a limited period of time (e.g., 10 seconds). Such an approach is typically more power efficient, yet permits the user to obtain the output information when desired. Alternatively, another switch (e.g., dedicated output switch) could be used to cause the output to be displayed for a limited period of time or while the switch is depressed.

In one embodiment, the eyewear including the activity monitoring system can further include one or more auxiliary sensors. FIG. **74** is a chart **5700** that depicts examples of auxiliary sensors that can be utilized with the eyewear.

The chart **5700** indicates that one type of auxiliary sensor is a "being worn" sensor. The "being worn" sensor would indicate whether the glasses are being worn by its user. The

"being worn" sensing mechanism can be performed using, for example, a thermal sensor, a motion detector, a stress sensor or a switch.

In one embodiment, a motion detector is used as a "being worn" sensor. A threshold can be set, such that if the amount of motion detected exceeds the threshold, the eyewear is assumed to be worn. The motion detector can, for example, be achieved by a mechanical means or an accelerometer.

In another embodiment, the "being worn" sensor includes one or more thermal sensors. In the case where two sensors are used, one sensor can be at approximately the middle of a temple, such as in a region that would receive heat from the head of the user wearing the glasses, and the other sensor can be positioned at the end of the same temple close to the hinge. If the temperature differential between the two sensors is beyond a certain preset value, the eyewear would be assumed to be worn.

In yet another embodiment, the "being worn" sensor includes a stress sensor at the hinge of the temple. The assumption is that when the eyewear is worn, the hinge is typically slightly stretched because typically the width of the head of the user can be slightly wider than the width between the temples when the two temples are in the extended positions. If the value of the stress sensor is beyond a certain preset value, the glasses would be assumed to be worn.

In still yet another embodiment, the "being worn" sensor can be implemented as a switch. For example, the switch can utilize optical, magnetic or mechanical means. In one embodiment, the switch can be positioned at the temple of the eyewear, such as a forward end of the temple proximate to a corresponding lens holder. Different embodiments of such sensors is also described in U.S. Provisional No. 60/583,169, filed Jun. 26, 2004, entitled "ELECTRICAL COMPONENTS FOR USE WITH EYEWEAR, AND METHODS THEREFOR," which has been incorporated herein by reference, see, e.g., section entitled "EYEGLASSES WITH USER INPUT CAPABILITY."

Another type of auxiliary sensor is an environmental sensor. The environmental sensor can sense environmental conditions, such as one or more of temperature (e.g., ambient temperature), pressure, humidity and toxins (e.g., chemicals, radiation, etc.).

Still another type of auxiliary sensor is a physical sensor. The physical sensor can sense physical conditions of the user of the glasses. Examples of physical sensors include sensing one or more of location, temperature, alertness, and vital signs (e.g., heart rate, blood pressure, etc.) associated with the user of the glasses. Still other physical sensors can sense emotions of the user. For example, the physical sensor could sense whether the user is calm, excited, happy, sad, angry, etc. In one embodiment, the physical sensor can also more generally sense user activity level. As an example, the user activity level can be used to provide a lifestyle indication. For example, a lifestyle indication might show that the user was active today or, alternatively, lazy today. Such a lifestyle indication can be displayed as a text or graphic symbol to let the user or others aware of the activity level.

In one embodiment, one particular type of physical sensor is a heart-beat sensor. The heart-beat sensor measures the heart beat of the wearer of the eyewear. One implementation for the heart-beat sensor utilizes an infrared emitter and an infrared detector as components. The infrared emitter can be an infrared LED and the infrared detector can be an infrared photodiode (or a non-infrared photodiode with a separate infrared filter). The components can be located at a temple of the eyewear, with both the emitter and the detector facing the user when the eyewear is worn. In operation, the infrared emitter shines infrared radiation towards the user, and the detector captures the infrared signals reflected back by the skin of the user. The magnitude of the reflected signals depends on the amount of blood flowing below the skin, which, in turn, depends on (i.e., fluctuates with) the heart beat. The rate of emission by the emitter and reception by the detector can be modulated (e.g., amplitude modulate) in a frequency range much higher than the heart beat, such as three Kilohertz. And the signals from the detector can be low-pass filtered before they are measured to identify the heart beat of the user. For example, the low-pass filter can have a cutoff frequency at about 1 Hertz (Hz).

It should be understood that the sensors might rely on more than one measured criteria. The one or more measured criteria might be used to determine the sensor output. The determination of the sensor output can involve estimation or prediction.

The auxiliary sensors can be provided in a redundant or fault-tolerant manner. For example, sensors can be provided in pairs. When one sensor of a pair malfunctions, the other one can replace it. In another embodiment, any of the auxiliary sensor information can be processed in a differential manner to examine changes to the auxiliary sensor information. The auxiliary sensors can by powered by a battery, solar energy, or kinetic energy. For reduced power consumption, the auxiliary sensors can remain in a low-power state unless data is being acquired by the auxiliary sensors. In yet another embodiment, two or more of the auxiliary sensors can communicate with one another (wired or wirelessly) to exchange data or control information.

In general, the auxiliary sensors can be fully or partially embedded in the eyewear or a base tethered to the eyewear. Alternatively, one or more of the auxiliary sensors can be separate from the eyewear, or any base tethered thereto, and wirelessly communicate with the eyewear or base.

An output (e.g., notification to the user) can vary in content and type. The type can be visual and/or audio. The content can be numerical, graphical, musical, textual, synthesized text, etc. The output can also be predetermined, dynamically determined or configurable. Still further, the output can be dependent on user preferences, user physical characteristics, auxiliary sensor information (e.g., location), or degree of health risk.

An activity monitoring system can also include one or more connectors with the eyewear. The connectors can, for example, facilitate electrical or mechanical interconnection with an external electrical device (e.g., computing device, media player, headset, power source). Although the format and size of the connectors can vary, in one embodiment, the connector is a standard audio connector or a peripheral bus connector (e.g., USB connector).

An activity monitoring system can also include one or more switches with the eyewear. The switches can, for example, facilitate user input or control with respect to the activity monitoring system. For example, the switches can provide one or more of on/off, reset, on, on (and reset), and calibration. The activity monitoring system can also provide a user with an indication of whether the system is currently on or off, such as by a graphical image on a display device or by a LED.

An activity monitoring system can also include a memory. The memory can be volatile or non-volatile. The memory can also be removable or non-removable with respect to the eyewear. If the memory is volatile, the activity monitoring system, if solar powered, could also include a battery to provide power to the memory so that stored data (e.g., user preferences, etc.) can be retained even when adequate solar

energy is not available. As an example, the presence of a memory can allow storage of activity information for an extended period of time to acquire a historical understanding of activity information.

In one embodiment, an eyeglass frame can include memory that can store acquired activity information. Such stored activity information can be subsequently uploaded to a computer, in a wired or wireless manner. The activity information can then be analyzed by the computer.

An activity monitoring system can also include a communication module. The communication module would allow data transmission to and from the activity monitoring system (namely, the eyewear) and an external device. The data being transmitted can, for example, be activity information, configuration data, user preferences, or auxiliary sensor data. The data transmission can be wireless or wireline based. The eyewear can further include a connector operatively connected to the activity monitoring system. Such a connector can facilitate data transmission with respect to the activity monitoring system or the eyewear.

A temple of a pair of glasses can be removable from the remainder of the frame. Such facilitates replacement of temples. For example, a convention temple could be removed from a frame and replaced with a temple having at least one electrical component at least partially embedded therein.

An activity monitoring system can be partially or fully contained in a temple arrangement associated with a temple of a pair of glasses. In one embodiment, the temple arrangement can be removable from the temple. A temple arrangement can be a temple tip, a temple cover or a temple fit-over.

In one implementation, an activity monitoring system (e.g., pedometer) can alternatively be provided in a temple arrangement. Referring back to FIG. **68**, each temple **5108**, **5110** has two ends, the first end and the second end. The first end is the end that is pivotally secured to its corresponding hinge **5112**, **5114**. In one arrangement, the second end of one or both of the temples **5108**, **5110** has a temple arrangement. In one embodiment, at least a portion of the electrical components of an activity monitoring system (e.g., pedometer) is in a temple arrangement, and another portion of the electrical components of the activity monitoring system is in a temple arrangement.

For some glasses, particularly when a pair of glasses has not been extensively worn, a temple arrangement, such as a temple tip, can be relatively easily removed and re-inserted into the glasses. As a result, temple arrangements of different color and/or shape and/or having different electrical components can be applied to the same frame of a pair of glasses. Retailers or distributors can then provide after-market modification or enhancement to a pair of glasses, at the preference of their consumers. This, for example, can be done by replacing existing temple tips with replacement temple tips. Alternatively, a consumer can identify the preferred temple arrangements to be sold with the glasses. Different embodiments on after-market enhancement and/or modification of glasses have previously been described in the related patent applications mentioned above.

An activity monitoring system can be partially or fully tethered to a pair of glasses. For example, some of the components for monitoring activity or one or more auxiliary sensors can be tethered to the eyewear. In one embodiment, the tethered components can be tethered at the neck or upper back region of the user. Tethering components can allow for increased design freedom with the eyewear as well as additional area with which to house the components. For example, an activity monitoring system could be partially or completely within a device or a base that can be tethered to eyewear.

Still further, an activity monitoring system could be partially or completely within a device or a base that can be tethered to eyewear.

In another embodiment, an eyeglass frame can have openings (e.g., holes) at the ends of the temple tips so as to facilitate attachments of straps, holders, etc.

Although much of the above discussion pertains to providing activity monitoring capabilities in eyewear, it should be understood that any of the various embodiment, implementations, features or aspects noted above can also be utilized in other or on end products besides eyewear. Examples of other such end-products can include: hats (e.g., soft hats, hard-hats, helmets), watches or watch bands, bracelets, bracelet accessories, necklaces, necklace accessories, rings, shoes (e.g., sandals, athletic shoes, beach shoes), shoe accessories, clothing (e.g., tee-shirt, swimming-suit, ties, pants, jackets, etc.), belts, belt accessories, zippers, key rings, purses, beach-tags, containers (e.g., cups, bottle, tube—such as a sun tan lotion bottle or tube); container holders (e.g., can holders, coasters, coolers, etc.), and other consumer products.

A number of embodiments have been described above for an eyeglass frame, i.e., primary frame. Such embodiments are also applicable to an auxiliary frame. An auxiliary frame can attach to a primary frame through different techniques, such as using clips or magnets.

In the event that electrical components, such as an activity monitoring system, are at least partially embedded in one of the temples of an eyeglass frame, the other of the temples can include other electrical components or even a counter weight. It is desirable for the eyeglass frame to be substantially balanced. Hence, the implementation of the eyeglass frame should offset any weight imposed by activity or other monitoring. For example, if five (5) grams of electrical components are added to one temple, the other temple should also have approximately five (5) grams added thereto.

Certain aspects of the invention can be implemented in software, hardware or a combination of hardware and software. Certain aspects of the invention can also be embodied as computer readable code on a computer readable medium. The computer readable medium is any data storage device that can store data which can thereafter be read by a computer system. Examples of the computer readable medium include read-only memory, random-access memory, CD-ROMs, magnetic tape, optical data storage devices, and carrier waves. The computer readable medium can also be distributed over network-coupled computer systems so that the computer readable code is stored and executed in a distributed fashion.

The advantages of the invention are numerous. Different embodiments or implementations may yield one or more of the following advantages. One advantage of the invention is that a pedometer or other activity monitor can be added to or coupled to eyewear. Another advantage of the invention is that pedometer or other activity monitoring capabilities can be provided for eyeglasses without substantial interference to style or design choices, and thus without being apparent that the eyeglasses support such capabilities.

FIG. **75** shows one embodiment of the present invention. The embodiment includes a pair of glasses **6010** with a first lens holder **6012** and a second lens holder **6014**. Both lens holders are for receiving lenses. The first lens holder **6012** has a first side and a second side. The second lens holder

6014 also has a first side and a second side. The pair of glasses has a bridge element **6015**. The bridge element is coupled to the first side of the first lens holder **6012** and the second side of the second lens holder **6014**. In one embodiment, the lens holders and the bridge element are not separate pieces, but are an integral piece.

The pair of glasses **6010** also includes a first temple **6016** and a second temple **6018**. The first temple **6016** is pivotally secured to the second side of the first lens holder **6012** through a joint **6020**. And, the second temple **6018** is pivotally secured to the first side of the second lens holder **6014** through another joint **6022**. The glasses **6010** further include a speaker **6024**, a power source **6026** and a switch **6028**. The speaker **6024** is powered by the power source **6026**, and the switch **6028** is used to turn the speaker **6024** on and off. The pair of glasses **6010** can deliver information through the speaker **6024** to the wearer or user of the glasses **6010**. In one embodiment, the information is available for a duration of time. With the speaker **6024** close to at least one of ears of the wearer of the glasses **10**, the information provided to the user can be provided in a relatively private manner.

In different embodiments, the glasses **6010** can be a pair of sunglasses, fit-over glasses, prescription glasses or other types of glasses. In a number of embodiments, the frames of the glasses have more surface area than frames with minimal structure, such as those frames with lenses connected together by wires. For example, the temples of the glasses can have a tapered profile. Each of the temples is wider or broader when it is close to its corresponding joint. In one embodiment, the temple is wider or broader by spanning across a wider or broader area longitudinally downward, creating a bigger surface in an orientation generally parallel to the side of the user's head. FIG. **75** shows an example of such an embodiment.

In another embodiment, there can be a shield at least at one edge of each of the lens holders of the glasses. These shields can wrap around, or better conform to the profile of, the face of the wearer. The shields can be opaque. There can be transparent or translucent windows on these shields. To illustrate, in fit-over sunglasses, when worn over a pair of prescription glasses, such shields can go over or cover at least a portion of the pair of prescription glasses. Note that in one embodiment, a pair of glasses does not have to include lenses.

In one embodiment, a pair of glasses is for an event. An event can be viewed from the perspective of one or more organizations sponsoring or organizing the event. These events can be, for example, a basketball game, a concert, or a trade show. These events are provided or sponsored by one or more organizations or companies. In a number of embodiments where information is available from a speaker at a pair of glasses and the glasses are for an event, the information made available from the speaker is related to the event. In such embodiments, the information can be available for only a limited duration of time and the duration is associated with the event, which can include some time (such as buffer time) before the event and some time after the event. When the event is over, which can include any post-event buffer time, the information will generally not be available.

In another embodiment, an event can be viewed from the perspective of the person at the event. From the perspective of the person, an event can be buying a product from a store. This can be considered an event from the point of view of the person at the event. Typically, it has a beginning, it has an end, and there is a purpose or a theme. The information is available to the person when the person is at or proximate to a location associated with the event, such as a building. When the person is away from the location, the information will not be available.

In one embodiment, the duration of an event is not more than a week. In another embodiment, the duration is not more than a day. In yet another embodiment, the duration of an event is not more than a few hours, such as nine hours.

In one embodiment, there is advertising or promotional material on a pair of glasses, and the material is related to an event. The material can be on the surface area provided by temples, shields or other areas on a pair of glasses. For example, if the event is about dinosaurs in the Jurassic period provided by an organization, there can be a Brachiosaurus printed on the glasses. The organization can use the surface area on the glasses as places for advertisement of not only the event, but also the organization itself. The organization can also sell such surface area to other companies, which can provide additional promotional material on the glasses.

Referring back to FIG. **75**, it shows one embodiment of the invention where there is a speaker **6024** in one of the temples **6018** of the glasses **6010**.

In one embodiment, the information is available for a duration of time, which can be short. For example, the power source **6026**, which can be a battery, may not have enough power to run the speaker **6024** in its full capacity for a long duration. To illustrate, the battery **6026** only has enough power to run the speaker continuously for a short duration of time, which can be less than a few hours with the speaker **6024** at its highest volume possible, when it is turned on by the switch **6028** in the glasses **6010**. The battery **6026** can be encapsulated in the glasses **6010**, such as in one of the temples **6018** of the glasses **6010**. The battery **6026** can be a coin battery or a AAA battery, or other types of batteries. In one implementation, the glasses are designed such that the battery **6026** is not easily replaceable by the user. The battery **6026** can be inside a temple and the temple can be sealed so that the battery **6026** is typically not replaceable without breaking the temple.

FIG. **76** shows a number of attributes regarding the applications of the glasses, such as the glasses shown in FIG. **75**, according to different embodiments of the invention.

In one embodiment, the information provided by the glasses can be driven by an event organized by an organization **6050**. For example, the user is at a football game in a stadium. The information can be related to a star player, such as his statistics, or other interesting information regarding the team. The information can be for an event related to the event at the stadium. For example, the user is at the Stanford Stadium watching the game between the Stanford and the Berkeley football teams. However, periodic update information or other types of information, such as play-by-play information, from a game at the UCLA Stadium between UCLA and USC can be provided to the user. All four teams are vying for the PAC **10** title. The user at the Stanford Stadium, who might be an UCLA fan, can hear about how the UCLA team is performing, while watching the Stanford/Berkeley game.

In the embodiments where information is available from the glasses, the information is available hands-free. This allows the user to use both of his hands totally freely, for whatever other purposes the user prefers, including providing different gestures.

In the embodiments where information is available, such as through a radio, the information can be available almost instantaneously when the electrical components in the embodiments are activated or turned on. This can be impor-

tant during high intensity games. If it takes 30 seconds to start the system before information is available, such down time may not be available or tolerable during the games.

The user in an event may not be the audience or the observer of the event. In one embodiment, the user using a pair of glasses in the present invention not only attends the event, the person also helps to produce the event. For example, the event is a game, and the person is a coach of one of the teams playing in the game. Additional embodiments will be described where a pair of glasses is coupled to a handheld device. The glasses provide information to the coach, who can use the handheld device for a number of purposes, such as to track plays or calls.

In one embodiment, the information available at a pair of glasses can be advertising materials available during the break time of a game. The advertising materials can, for example, be from a company organizing or sponsoring the event, or from one of the teams in the event.

As another example, the event is an indoor event, such as an indoor concert.

The information can be location driven **6052**, which in one embodiment can be considered as an event attended by a user when the user is at the location. For example, the user is in a store, with many products. The products can be services. As the user moves around the store, he looks at different products. In one approach, each product is designated by a number. By entering the specific number into the glasses or into a portable device coupled to the glasses, such as through a switch, information pertinent to the corresponding product will be available to the user. As another example, the user can be in an exhibit hall, a trade show or in a museum. As the user strolls in the hall, information of different exhibits is available to him. Or, the user can be walking around a botanical garden, and is given a virtual, unguided tour by the glasses of the different type of plants in the garden. When the user moves away from such locations, the information will not be available.

The user can be at places where he is alone, or he does not know anybody. He might be bored. For example, he can be in a dental office having his teeth cleaned. Or, he can be in a bank waiting for his turn. Different types of information can be available to him. For example, if the bank has a new home loan program, such information is available to him. Again, when the user moves away from such location, the information will not be available.

The information can be for entertaining **6054** the user. Or, the information is primarily promotional **6056** in nature. The promotion can be related to the event the user is participating, or the promotion can be related to the location, such as the company associated with the user's location.

The information can be in different languages **6058**. For example, glasses with a red dot provide information in English, while glasses with a white dot provide information in Spanish. Or, there can be a switch on the glasses that allows setting the language to that preferred by the user.

The glasses can be given away **6060**. They can be sold at a relatively low price **6062**. Or, the glasses can be for temporarily use, such as the user can borrow, rent or lease **6064** the glasses for a short duration of time. To track such glasses after they have been rented, each pair of glasses can have an identifier, such as a bar code. The bar code can be located on the inside of the glasses, such as on the inside of a temple of the glasses. In another embodiment, each pair of glasses can also or alternatively have a RFID tag, which can be wirelessly tracked. The tag can be in a temple, such as in the vicinity of the tip of the temple, or its temple tip. A temple tip is, in general, in a region of the temple substantially furthest away from the hinge of that temple. The organization responsible for renting out the glasses can ask for the user's identity card, which can be the user's driver's license. The card is then linked to the bar code, the RFID tag or other identifier of the glasses. When the user returns the glasses, the user can reclaim the corresponding identity card.

Referring back to FIG. **75**, the embodiment **6010** includes a speaker **6024** that is at least partially embedded into the glasses. There are different approaches to embed an electrical component, such as a speaker, into different types of glasses. A number of approaches are described, for example, in the various related patent application noted above.

In one embodiment, the pair of glasses **6010** shown in FIG. **75** includes a radio, and the speaker is a part of the radio. All the electronics for the radio are at least partially embedded in the glasses. For example, the electronics can be on a printed circuit board, and the board is in one of the temples of the glasses. Information is provided to the user through the radio. The radio can be an AM or a FM receiver. In one embodiment, the receiver is pretuned to the frequencies of the transmitter of the information. Or, before the glasses are distributed, the radio is set to receive signals from a specific frequency band. Also the radio may not include an external tuner or switch on the glasses for the user to tune the radio to listen to another frequency band. In another embodiment, the receiver is tunable by a switch on the glasses to one or more frequencies.

The information can be information captured by a microphone or other pickup device, and transmitted over radio frequency waves to the radio.

As to the transmitted frequencies, typically government agencies, such as the FCC in the United States, regulate the availability of frequency ranges, particularly when the power of transmission is not low. In one embodiment, the transmitted frequencies can be on either side of the standard FM radio bands. They can be within the television VHF frequency range of 50 megahertz to 150 megahertz, or 49 to 88 MHz, or 108 to 220 MHz. Selecting such frequencies can have the advantage of having receiver components more readily available and less expensive. But, the frequencies selected may vary depending on costs, performance and/or FCC or other government agency requirements.

In another embodiment, the transmitted frequencies are in the CB (Citizen Band) radio band.

In yet another embodiment, the transmitted frequencies are FM-sidebands. This would allow the use of FM sideband receivers. Using such sidebands typically would require a lease from radio stations.

In one embodiment, information is transmitted to the glasses through a Wi-Fi network, or a WiMax network.

Also, the frequencies transmitted could be based on spread spectrum techniques. In other words, though the frequencies would constantly change, the transmitter and the receiver would be synchronized following the changing frequencies. In a number of countries, such embodiments do not require government license.

Information can typically reside within a few MHz. In one embodiment, the radio in the glasses is a narrow-band receiver, with a bandwidth of 3-6 MHz.

In yet another embodiment, the radio can receive signals from one of multiple and proximate AM modulated frequencies. For example, in a museum, information from adjacent artwork can be transmitted based on frequencies centered at the different frequencies. The radio receiver is a broader band AM receiver, which can be a receiver non-tunable by the user. Depending on proximity, the radio will adjust automatically to capture the frequency of the carrier for

information regarding the particular artwork and excludes cross-talks from information regarding its immediate adjacent artworks.

Another embodiment considers the power level of the transmitted signals. If the power level of the transmitted signals is low, signals do not travel an excessive distance beyond the transmitter of the signals. For example, the low power level can be between ¼ to ½ watts. Or, the low power level is not more than 50 milliwatts. If the transmitted power level is low, it is relatively easier to meet government agencies, such as the FCC's, guidelines. Cost and complexity of the circuitry are usually also reduced. High power transmission typically requires special government approval.

In one embodiment, the transmission path between the transmitter and the receiver is primarily line of sight, and the information can be transmitted via, for example, infrared.

In yet another embodiment, there can be multiple transmitters. This can then keep transmission power low even if a large or unusually shaped area is to be covered. The corresponding radio will capture its signals from the transmitters based on proximity.

In one embodiment, the frequency of the radio cannot be tuned at the glasses by the user. The frequencies are fixed upon distribution of the glasses. In another embodiment, the frequencies of interest can be changed. For example, there can be an EPROM in the glasses that can be programmed. Or, one can replace a chip in the glasses to adjust the frequencies. In yet another embodiment, there can be one or more switches at the glasses to change the frequencies.

A number of embodiments have been described where the glasses include a radio to receive broadcast information. In another embodiment, the information to be received is previously programmed or recorded within a memory device. The glasses include a player to play the information stored in the memory device, and the player includes a speaker. The player is at least partially embedded in the glasses. In one embodiment, the glasses can include the memory device with the recorded information.

The memory can be on a printed-circuit board and, for example, can store up to 256 MB. The memory can be a built-in or removable flash memory. In one embodiment, the glasses include one or more connectors. The memory embedded in the glasses can be coupled to a device external to the glasses through the one or more connectors. As an example, a 256 MB flash memory is in one of the temples of a pair of glasses, and there is a USB connector at, for example, the end of that temple (close to the ear) to couple to an external device or instrument.

With the storage medium embedded, the glasses can upload information in the memory to or download information into the memory from an external device, such as a computer. A user can couple the glasses into the computer through a connector, either directly or indirectly. For example, indirect coupling might use an intermediate wire between the computer and the glasses.

In yet another embodiment, the memory device is external to the glasses. The memory device is coupled to the glasses through a connector at the glasses. If such removable memories are deployed for an event, the memories can be rented out during the event. Again, such memories can be tracked based on, for example, identifiers stored in the memories, or attached to the memories.

FIG. **77** shows some of the electrical components for a player **6100** in a glasses according to an embodiment of the invention. The player includes a speaker **6102**, a data bus **6104** to facilitate data transfer among, for example, a processor **6106**, a storage device **6108**, and a coder/decoder (CODEC) **6110**. The processor **6106**, which can be a microprocessor or controller, controls the operation of the player **6100**. The storage device **6108** stores the information, which can be different types of appropriately-formatted media data. In one example, the information is digitally encoded audio signals. The storage device **6108** can include a number of separate storage elements. For example, the device can be a flash memory device, or a minidisk device, and a cache, which can improve the access time and reduce power consumption of the storage device **6108**. The storage device **6108** typically also includes a Read-Only Memory (ROM), which stores programs, utilities or processes to be executed in a non-volatile manner. The player **6100** can also include a RAM, such as for the cache.

Once a piece of information is selected to be played, the processor **6106** would supply the piece of information to the CODEC **6110**, which decompresses the media data and produces analog output signals for the speaker **6102**. In one embodiment, the bus **6104** is also coupled to an input/output device **6112**, which would allow information to be downloaded from an instrument to the glasses.

There are different approaches to identify a piece of information to be played. In one embodiment, different pieces of information in the storage device **6108** can be categorized, and the categorization can be hierarchical, with multiple levels in the hierarchy. To illustrate, assume that there are three levels. The top level can be the name of the football team; the second level can be the names of the players on the team, and the third level can be scoring statistics or other attributes of the players. The entries, such as the name of the players, can be abbreviated. There can be a control knob or switch to allow the user to scroll down entries in a level. By pushing the knob, the user selects an entry, which can lead the user to the next level. There can be an entry for moving up a level also. In one embodiment, once an entry is selected, the identity of that entry will be announced. For example, a selected entry is about the statistics of Joe Smith. Once that entry is selected, the speaker will state, "Joe Smith statistics." If that is the one the user wants, the user can signal his preference by, for example, pushing a switch.

In another embodiment, the information can be searched. The search can be based on one or more key words. As an example, the information is related to songs. A user can search by the name of the song, the name of the artists or music genre. Entry for the search term can be through voice recognition applications in the glasses. Based on the term verbalized by the user, a song will be selected. The glasses can ask the user if that is the song the user has selected. If the response is positive, the song will be played. If not, the glasses will ask the user to verbalize the term again. In another embodiment, entering the search terms is through the key pad of a portable device, wired or wirelessly, coupled to the glasses. Additional descriptions regarding having a portable device linked to a pair of glasses will be further discussed below.

With the speaker relatively close to at least one ear of the user, the volume of the speaker does not have to be very high. In one embodiment, the volume of the speaker is limited, such as the maximum sound level is not more than 60 dB. If the glasses are powered by a battery, limiting the volume of the speaker would extend the lifetime of the battery. Such a limit can also reduce the chance of the speaker generating audio signals that might disturb people in the vicinity of the user. This, in turn, helps to provide information to the user in a relatively private manner.

In one embodiment, the glasses are powered by a battery. To extend its lifetime, the glasses include a timer. For example, if the glasses have a radio, after the radio is turned on for a preset amount of time, the timer will turn the radio off automatically. In another embodiment, the glasses include a speaker and the timer would turn the speaker off after the speaker has been turned on for a preset amount of time. The preset time can be determined by the timer.

In another embodiment, the glasses are powered by other types of sources, such as a solar cell or a fuel cell. Such other type of sources can be at one of temples of the glasses.

As explained, in a number of embodiments, the glasses include a switch, which typically is at least partially embedded in the glasses. For example, the switch can be used to turn the speaker on, or to tune the frequency of a radio. If the glasses have two speakers, such as one on each of the temples, there can be two switches, one on each temple to control the corresponding speaker. The two speakers can be for generating stereo audio signals for the user. There can also be one control switch for both speakers.

The switch in the glasses can have different attributes. It can be activated by different type of forces, including mechanical, radiation, magnetic, electrical, and temperature. The switch can also be activated remotely by a remote device. The switch can be based on one or more detectors. The switch can have different degrees or ranges of control, such as binary, multiple discrete steps or incremental control. The switch can be placed at different position on the glasses, such as on the side or top surface of a temple or at a joint. The control can take perception into consideration, such as based on texture, height and lateral position of multiple switches.

FIG. **78** illustrates a number of forces **6150** activating the switch according to different embodiments of the invention. They can be based on, for example, mechanical **6152**, radiation **6154**, magnetic **6156**, electrical **6158**, and temperature **6160**.

FIG. **79** illustrates a number of mechanical forces **6152** activating the switch according to different embodiments of the invention. The mechanical switch or sensor can be a conductive-elastomer switch **6202**, a membrane switch **6204**, a dome switch **6206**, a relatively simple wire switch **6208**, and a roller switch **6210**, such as a switch including a wheel. Another type of mechanical force can be based on stress **6211**, such as a switch based on piezoelectric force or a piezoelectric device.

In yet another embodiment, the mechanical switch is made so that the electrical circuitry in the glasses can be activated but not deactivated by the user. In other words, once activated, the switch is designed not to be deactivated by the user, and the circuit will remain on till the power source inside the glasses is depleted. One approach to implement such a switch is based on a piece of insulating material **6216** between a terminal of, for example, a battery and its contact with the circuit embedded in the glasses. When the battery is installed, at least one of its terminals is separated from its circuit contact. There can be a thin, flexible, insulating material, **6216**, such as a ribbon, positioned between the terminal and the contact. Though the circuit is embedded in the glasses, the insulating material **6216** extends outwardly from inside the glasses through a hole, such as a small hole, in the side wall of, for example, a temple of the glasses. In one embodiment, the hole or slot is located above or below the terminal and the contact, or the hole is not directly inline with the terminal and the contact. By pulling the insulating material out from the glasses, the terminal will establish electrical connection with the contact, activating the circuit and turning the speaker on.

In another embodiment of a switch based on mechanical force **6154**, the mechanical force is the force that is used to insert **6218** a battery into the glasses. Once the battery is inserted, the speaker in the glasses will be activated. The speaker will remain on until the battery is removed, or until the power in the battery is drained.

The switch can also be activated by radiation **6154**, or energies in a type of radiation, according to a number of embodiments of the invention. The radiation **6154** can be in the optical, or infrared or ultraviolet range. For example, the switch includes a photodiode or photo sensor in the glasses, and there is an opening above the photodiode. In one embodiment, the diode is activated by light getting to the diode through the opening. In another embodiment, the circuit is activated if the opening is covered to prevent light from getting to the diode.

The switch can be activated by magnetic forces **6156**. For example, there can be a magnetic sensor or a Hall effect detector inside a temple proximate to a joint of a pair of glasses. FIG. **80** shows a section of a pair of glasses **6250** with such a detector **6254**. The detector **6254** is electrically connected to a printed circuit board **6255**. When the temple **6252** is in its extended position, as when the glasses **6250** are ready to be worn, the detector **6254** will be directly adjacent to a magnet **6256** inside a lens holder **6258** at the corresponding joint **6260**. The magnet **6256** would activate the Hall effect detector **6254**. In another embodiment, a magnetic switch is activated based on changing the inductance of a coil. For example, the switch includes a steel rod that can be positioned in or out of a coil. The switch's range of control is based on the position of the rod with respect to the coil.

The switch can be activated depending on electrical forces **6158**. In one embodiment, the electrical force depends on capacitive effect. By changing the capacitance, the switch is turned on and off. For example, the capacitance is changed by placing one's finger over a metallic pad. In another example, by changing the amount of overlap between two metallic sheets that are not in contact, the capacitance between the two metallic sheets will change. This then changes the range of control of the switch.

In another embodiment, the electrical force **6158** is based on resistive effect. For example, the switch is made up of a slide or a rotary potentiometer. By changing the amount of coupling, the amount of resistance is changed to reflect the range of control of the switch.

In one embodiment, the switch's activation can depend on temperature **160**. For example, the switch includes a temperature sensor. When the temperature reaches a certain point, the switch is activated.

In yet another embodiment, the switch is controlled by a remote controller. For example, the glasses include an infrared detector. The remote controller can generate infrared radiation. By aiming the controller at the detector, the infrared radiation can activate the infrared detector and the switch is activated. Or, if the user moves into the vicinity of a corresponding infrared transmitter, circuits in the glasses would be activated.

The switch can include one or more previously-described sensor or detector of different types of forces. For example, the switch can use two photo sensors. One sensor is exposed to light on the outside surface of the temple and the other is exposed to light on the inside surface of the temple, such as close to the ear. Based on their differential output, the switch is activated. As another example, there are two temperature

sensors in the glasses. One is located close to a joint and the other is at the temple close to the ear. Again, the switching action depends on their differential outputs. In yet another embodiment, the glasses include more than one type of switch. There can be one type of switch, such as a mechanical switch, acting as an on/off switch, and another, such as a switch using electrical forces, as an incremental switch to change frequency.

As described, in a number of embodiments, the switch can provide different degrees or ranges of control. In one embodiment, there are two degrees of control, such as in an on/off switch. In another embodiment, there can be multiple discrete degrees, steps or positions. For example, the switch is a roller with discrete notches to indicate different discrete positions. Or, there can be two mechanical switches, placed side-by-side. Pushing one switch will increment one step, and pushing the other will decrement one step.

In yet another embodiment, the change from one degree to the next is gradual and not noticeably discrete. This can be achieved with two (2) sensors arranged in quadrature. FIGS. **81**A-**81**C show examples of different embodiments of such a switch based on two photodiodes or photo detectors.

FIG. **81**A shows an embodiment **6300** with a wheel **6302** (roller) having clear strips, **6304**, **6306** and **6308**, alternating with black strips, **6310**, **6312** and **6314**, and two photodiodes, **6316** and **6318**. Most of the wheel **6302** and the two diodes, after incorporated into the temple **6320**, are covered by a piece of material **6322**. The two diodes, **6316** and **6318**, are exposed to ambient light through a clear window **6324**. A part of the wheel **6302** is extended out of the temple **6320**, allowing the wheel **6302** to be turned about its axis **6326**. The wheel **6302** can have teeth for friction turning. As the wheel **6302** rotates about the axis **6326**, based on the differential outputs from the diodes, the direction of movement of the wheel **6302**—clockwise or counterclockwise—is determined. For example, if the wheel **6302** is rotated clockwise, the top diode **6316** senses light before the bottom **6318** senses light. On the other hand, if the wheel **6302** is rotated counterclockwise, the bottom diode **6318** senses light before the top **6316**. Based on the signals from the two diodes, one would be able to tell if the wheel is being turned clockwise or counterclockwise. Clockwise can denote increase and counterclockwise can denote decrease. This embodiment can be used, for example, to change frequency. By turning the wheel **6302** clockwise, the frequency of the radio goes up. And, by turning the wheel **6302** counterclockwise, the frequency goes down. Such a wheel **6302** is also applicable for other purposes, such as controlling the volume of a speaker.

FIG. **81**B shows an embodiment **6350** with a wheel **6352** having black **6354** and reflecting **6356** strips, two photodiodes, **6358** and **6360**, and a LED **6362**. Again, most of the wheel, the two diodes and the LED are covered by a sheet of material **6364**. If a reflecting strip **6356**, instead of a black strip **6354**, goes over a diode, more light from the LED will be reflected back and received by the diode. If a black strip **6354** goes over a diode, output from the diode will be significantly reduced. Again based on the signals from the diodes, the direction of rotation can be determined, which, in turn, can be used to indicate incrementing or decrementing outputs.

FIG. **81**C shows an embodiment **6400** again using two photodiodes, **6402** and **6404**, but without a wheel. The two diodes, **6402** and **6404**, are exposed to ambient light unless they are covered. In this embodiment, whether the finger **6406** or another object is moving from the first diode **6402** to the second diode **6404**, or from the second diode **6404** to the first diode **6402** can be determined based on the signals from the diodes. For example, the finger **6406** sliding in a forward direction would trigger a signal from the first diode **6402** before the second diode **6404**. On the other hand, sliding the finger in a backward direction would trigger a signal from the second diode before the first diode. Thus, the outputs from the two diodes can show the direction of movement of the finger. One can then, for example, assign forward movement (from the first **6402** to the second **6404**) as increment, and backward movement (from the second **6402** to the first **6402**) as decrement.

A switch can be placed at different location on a pair of glasses. In one embodiment, the switch is positioned on one of the side surfaces of one of the temples, such as the side that is not facing the face of the user when the glasses are worn. In another embodiment, the switch is positioned on a top surface of one of the temples. The switch **6028** shown in FIG. **75** falls under this category. In yet another embodiment, the switch is positioned at one of the joints or hinges of the glasses. For example, there is a mechanical switch at a joint. If the corresponding temple is extended, as in the position when the glasses are worn, the switch will be pressed, which can indicate that the switch has been activated.

In one embodiment, the user can be using a switch when the glasses are worn. Depending on the position and the type of switch, the user may not be able to see the switch when he is manipulating it. In one embodiment, the design of the switch takes into consideration perception. To illustrate, there are two mechanical switches on the glasses. The top surfaces of the two switches have different texture. One switch has a smooth surface and the other has a rough surface. Pushing the rough surface implies incrementing one step and pushing the smooth surface implies decrementing one step. This type of perception design is based on tactile effect. In another example, the heights of the two switches are different. The taller switch is for one effect and the shorter is for another. In yet another embodiment, the lateral position of the two switches has significance. For example, the two mechanical switches are on the top surface or edge of a temple. By pushing the switch closer to the lens holder, the volume of the speaker in the glasses goes up; and by pushing the switch further away from the lens holder, the volume of the speaker goes down. In another example, the two switches are under the two ends of a piece of materials, such as a rocker-lever, which can be plastic. Rocking the plastic piece forward is an increment motion, and rocking the plastic piece backwards is a decrement motion.

A number of embodiments have been described where information is available only for a relatively short duration of time. In one embodiment, the information is available for a longer duration of time. For example, after the short duration of time, the battery in the glasses is drained. In order to continue on running the electronics inside the glasses to get the information, the user can replace the battery in the glasses with a new battery. In this embodiment, the glasses are designed so that the battery is replaceable by the user. Or, in another embodiment, the battery is rechargeable through a connector at the glasses.

A number of embodiments have been described regarding the glasses with a speaker for providing information to the user. In one embodiment, the glasses also include one or more light emitting diodes. The LEDs can be for entertaining purposes. For example, the information provided to the user is music. If the audio signals received are beyond a certain threshold, one or more of the LEDs will be activated. The activation of the one or more LEDs can then be

synchronized to the sound of the speaker. In another example, a number of LEDs could be arranged as an array on the outside surface of one of the temples. The array could display graphics, pictures, or scrolling text. The array could also be located at other locations on the glasses, such as across the front surface or the top surface of the bridge or the lens-holders of the glasses.

One embodiment of the glasses includes a specially-designed surface texture, such as on the outside surface of a temple of the glasses. By scratching the surface texture, depending on its design, one can generate specific audio tones.

A number of embodiments have been described regarding electrical components in a temple of a pair of glasses. All of the electronic components can be self-contained inside the temple of the glasses. The components can be coupled to a printed circuit board. In other embodiments, some of the components are embedded fully or partially in other areas of the glasses, such as the lens holders or the bridge of the glasses. Or, one or more electrical components can be in a shield of the glasses.

A number of embodiments have been described regarding information available for a pair of glasses. In one embodiment, a pair of glasses also includes an information input mechanism that allows its user to input information into the glasses. Such information allows the user to provide inputs or feedbacks.

The information input mechanism can be implemented by a switch at the glasses, such as one of the switches previously described. The user input can be stored in the glasses if the glasses include memory storage electrical components. The input can be wirelessly transmitted from the glasses to a remote device if the glasses include wireless transceiver electrical components. For example, the user is at a football game, and the referee has made a controversial call. A broadcaster at the event can instantaneously use such glasses to perform a simple polling. This can be done by the broadcaster as part of the wireless transmission of information (e.g., event information) to the wearer of the glasses. Alternatively, the broadcaster can transmit a message to the user. In one embodiment, there can be an indicator on the glasses to indicate that there is a message for the wearer of the glasses. The indicator can be a LED light flashing for a few seconds, a ringing tone that rings for a few seconds, or other types of indication at the glasses. In any case, if desired, the wearer can receive the message. The message asks the wearer to push a button (an information input mechanism) at the glasses one time, if the wearer believes the call was correct, and two times otherwise. Such input information from the glasses is then wirelessly transmitted from the glasses and received by the broadcaster. Statistics on the responses can then be automatically performed. Such statistics can be provided almost instantaneously to, for example, the referee.

In one embodiment, each pair of such glasses also includes an identifier that identifies the glasses, such as an identification number. When input information is transmitted from such a pair of glasses, such as back to the broadcaster, its identifier can also be transmitted together with the corresponding input information.

Organizers of an event or a company affiliated with or related to the event also can use the glasses to gather other information from the wearers of the glasses, such as the audience of the event. For example, the audience can be electronically polled regarding ways to improve on the services they received.

The information input mechanism can include a microphone at the glasses. The organizers again can send a message to a user of a pair of such glasses. The message can be as follows: "If you like the ways we take food orders, say yes. If not, say no." The voice response from the user is transmitted to the organizers. Such simple yes/no responses can be automatically deciphered based on voice recognition mechanisms and then automatically tabulated for the organizers.

In one embodiment, not all of the electrical components in a number of the glasses previously described are in the glasses. Instead, at least one of the electrical components, such as its power source, is in a portable device, which can also be carried by the user of the glasses. In another embodiment, a pair of glasses can function as a headset and are wired or wirelessly coupled to a portable device. The portable device can provide additional areas for user input, or outputs to the user.

As an example of wireless coupling for a pair of glasses functioning as a headset, the glasses include a wireless transceiver that is based on, for example, Bluetooth, UWB, Zigbee, or other types of short-distance wireless transmission standards. Based on the transceiver, the glasses are wirelessly coupled to a corresponding portable device. Information from long distances can be received by the portable device, which can then re-transmit such information to the glasses.

As an example of wired coupling for a pair of glasses functioning as a headset, the glasses include a connector. The connector can be used to electrically connect to a portable device through, for example, a wire. In one embodiment, the connector at the glasses is a male connector and is located at the tip of one temple of the glasses, such as at the tip position **6019** of the second temple **6018**, shown in FIG. **75**. When the male connector is not inserted into a female connector, the male connector can be covered, such as with a cap or a cover, to protect, encapsulate or shroud the connector. In one embodiment, at least a portion of the connector is covered.

Different embodiments of glasses functioning as a headset have been described in copending patent application, entitled, "EYEGLASSES WITH HEARING ENHANCED AND OTHER AUDIO SIGNAL-GENERATING CAPABILITIES", which was incorporated by reference above, and can be used with the various embodiments described herein.

A number of embodiments have been described regarding glasses with a number of structural elements. In one embodiment, the glasses can be rimless frames. The glasses can include two lenses held together by a bridge. A temple can be attached to each lens through a joint that is connected to the corresponding lens by one or more screws. For example, there can be two screws at each lens to hold onto a temple piece, which includes a joint for a corresponding temple. One or more electrical components can be fully or partially embedded in the glasses, such as in a temple of the glasses.

A number of embodiments have been described with glasses. In one embodiment, a device, which is not a pair of glasses, can provide information to a user, where the information can be directly relevant to an event attended by the user. There can also be a user input mechanism at the device to allow the user to provide user input, including user feedback. Different embodiments of electrical components previously described can be in the device. Advantageously, in one embodiment, the different embodiments of components have minimal impact on the design of the end product and no tedious wiring is required. For example, in the case in which the end product is an eyeglass frame, a temple of

the eyeglass frame can have an opening, cavity or container to hold or encompass the different embodiments of components, whereby no other changes or complications to the eyeglass frames need be imposed. Other such end-products can include: hats, shoes, watches, tee-shirt, swimming-suit, key-ring, purse, beer can holder, and other consumer products.

The various embodiments, implementations and features of the invention noted above can be combined in various ways or used separately. Those skilled in the art will understand from the description that the invention can be equally applied to or used in other various different settings with respect to various combinations, embodiments, implementations or features provided in the description herein.

A number of embodiments in the invention can be implemented in software, hardware or a combination of hardware and software. A number of embodiments of the invention can also be embodied as computer readable code on a computer readable medium. The computer readable medium is any data storage device that can store data which can thereafter be read by a computer system. Examples of the computer readable medium include read-only memory, random-access memory, CD-ROMs, magnetic tape, optical data storage devices, and carrier waves. The computer readable medium can also be distributed over network-coupled computer systems so that the computer readable code is stored and executed in a distributed fashion.

Numerous specific details are set forth in order to provide a thorough understanding of the present invention. However, it will become obvious to those skilled in the art that the invention may be practiced without these specific details. The description and representation herein are the common meanings used by those experienced or skilled in the art to most effectively convey the substance of their work to others skilled in the art. In other instances, well-known methods, procedures, components, and circuitry have not been described in detail to avoid unnecessarily obscuring aspects of the present invention.

In the foregoing description, reference to "one embodiment" or "an embodiment" means that a particular feature, structure, or characteristic described in connection with the embodiment can be included in at least one embodiment of the invention. The appearances of the phrase "in one embodiment" in various places in the specification are not necessarily all referring to the same embodiment, nor are separate or alternative embodiments mutually exclusive of other embodiments. Further, the order of blocks in process flowcharts or diagrams representing one or more embodiments of the invention do not inherently indicate any particular order nor imply any limitations in the invention.

The many features and advantages of the present invention are apparent from the written description and, thus, it is intended by the appended claims to cover all such features and advantages of the invention. Further, since numerous modifications and changes will readily occur to those skilled in the art, it is not desired to limit the invention to the exact construction and operation as illustrated and described. Hence, all suitable modifications and equivalents may be resorted to as falling within the scope of the invention.

What is claimed is:

1. A personal audio system operable to at least generate customized audio output, comprising:

a pair of ear buds, each configured to be placed in an ear of a user; and

a mobile communication device at least for supporting audio output, the mobile communication device configured to store at least a hearing profile associated with the user, the stored hearing profile associated with the user at least characterizes hearing impairment regarding the user's ability to hear, the mobile communication device configured to produce audio output signals customized for the user based on at least the stored hearing profile associated with the user such that the customized audio output signals at least compensate for the hearing impairment regarding the user's ability to hear, the mobile communication device configured to produce the customized audio output signals using at least signal amplification, and the mobile communication device configured to transmit the customized audio output signals to the pair of ear buds,

wherein each of the ear buds is configured to receive at least a portion of the customized audio output signals transmitted by the mobile communication device, and

wherein each of the ear buds is configured to generate at least a portion of the customized audio output for the user in accordance with at least the portion of the customized audio output signals being received.

2. A personal audio system as recited in claim **1**, wherein the mobile communication device is configured to establish the hearing profile for the user.

3. A personal audio system as recited in claim **2**, wherein the hearing profile for the user is established by the mobile communication device at least via generating audio tones and outputting such to one or more of the ear buds and receiving a user indication corresponding to the user's ability to hear the generated audio tones.

4. A personal audio system as recited in claim **1**, wherein the signal amplification is frequency-dependent amplification.

5. A personal audio system as recited in claim **1**, wherein each of the earbuds includes a speaker, and

wherein the at least a portion of the customized audio output being generated by each of the ear buds is generated by the corresponding speaker.

6. A personal audio system as recited in claim **1**, wherein at least one of the earbuds in the pair of earbuds comprises an array of microphones configured for directional audio pickup.

7. A personal audio system as recited in claim **6**, wherein direction of the directional audio pickup is in front of the user.

8. A personal audio system as recited in claim **6**, wherein direction of the directional audio pickup is outward from the user.

9. A personal audio system as recited in claim **1**, wherein at least one of the earbuds in the pair of earbuds comprises a plurality of microphones configured for audio pickup.

10. A personal audio system as recited in claim **9**, wherein the plurality of microphones includes at least:

a first microphone configured to receive audio pickup from the user; and

a second microphone configured to receive audio pickup outward away from the user.

11. A personal audio system as recited in claim **10**, wherein the audio pickup from at least the second microphone is used at least for noise cancelation.

12. A personal audio system as recited in claim **11**, wherein at least a portion of the audio pickup from the second microphone is subtracted from the audio pickup from the first microphone.

13. A personal audio system as recited in claim **12**, wherein each of the ear buds includes at least a speaker and is configured to generate at least a portion of the customized audio output for the user via the speaker.

14. A personal audio system as recited in claim 1, wherein the mobile communication device is or includes a mobile phone.

15. A personal audio system as recited in claim 1, wherein the customized audio output includes music.

16. A personal audio system as recited in claim 1, wherein the customized audio output includes a voice conversation.

17. A personal audio system as recited in claim 1,

wherein at least one of the earbuds in the pair of earbuds comprises a plurality of microphones configured for audio pickup,

wherein at least one of the microphones is configured to pick up an audio command, and

wherein the mobile communication device is configured to induce an operation or action based on the audio command.

18. A personal audio system as recited in claim 1, wherein the customized audio output signals are produced based on amplifying or attenuating different frequency bands differently according to at least the stored hearing profile.

19. A personal audio system as recited in claim 1, wherein the hearing profile associated with the user is self-determined by the user.

20. A personal audio system as recited in claim 1,

wherein the mobile communication device includes computing capabilities and a storage device, the storage device storing at least a software program executed by the mobile communication device to enable the user to establish the hearing profile associated with the user, and

wherein the mobile communication device is configured to establish the hearing profile associated with the user via the software program executed by the mobile communication device based on the user interacting with the software program via the mobile communication device.

21. A personal audio system as recited in claim 20, wherein the software program at least interactively guides the user to establish the hearing profile for the user.

22. A personal audio system as recited in claim 21, wherein the software program at least interactively guides the user to establish the hearing profile for the user by at least causing various audio tones to be output to the user via at least one of the earbuds, prompting the user to provide a hearing input with respect to one or more of the various audio tones being output, and receiving the hearing user input pertaining to one or more of the various audio tones being output.

23. A personal audio system as recited in claim 1,

wherein at least one of the earbuds in the pair of earbuds comprises

a radiation detector configured to capture radiation data; and

first electronic circuitry electrically connected to the radiation detector, the first electronic circuitry configured to process at least the radiation data captured by the radiation detector,

wherein the first electronic circuitry is configured to determine whether the earbud is being worn by a user based on at least the processed radiation data.

24. A personal audio system operable to at least generate customized audio output, comprising:

a head-worn wearable electronic device including at least a pair of speakers, each of the speakers being configured to be wearable proximate to an ear of a user; and

a mobile communication device at least for supporting audio output, the mobile communication device configured to store at least a hearing profile associated with the user, the stored hearing profile associated with the user at least characterizes hearing impairment regarding the user's ability to hear, the mobile communication device configured to produce audio output signals customized for the user based on at least the stored hearing profile associated with the user such that the customized audio output signals at least compensate for the hearing impairment regarding the user's ability to hear, the mobile communication device configured to produce the customized audio output signals using at least signal amplification, and the mobile communication device configured to transmit the customized audio output signals to the pair of speakers,

wherein each of the speakers is configured to receive at least a portion of the customized audio output signals transmitted by the mobile communication device, and

wherein each of the speakers is configured to generate at least a portion of the customized audio output for the user in accordance with at least the portion of the customized audio output signals being received.

25. A personal audio system as recited in claim 24,

wherein the head-worn wearable electronic device includes at least a rechargeable battery, and

wherein the rechargeable battery is able to be charged when the head-worn wearable electronic device is coupled to a docking station.

26. A personal audio system as recited in claim 24,

wherein the head-worn wearable electronic device includes at least a rechargeable battery and at least one conductive element,

wherein the rechargeable battery is able to be electrically coupled via the at least one conductive element to a charging apparatus and charged when the head-worn wearable electronic device is placed within the charging apparatus, and

wherein the electrical coupling of the at least one conductive element with the charging apparatus is supported by at least a magnetic element.

27. A personal audio system as recited in claim 24, wherein the mobile communication device is configured to wirelessly communicate with the head-worn wearable electronic device over a wireless network.

28. A personal audio system as recited in claim 27, wherein the wireless network is a short-range wireless network.

29. A personal audio system as recited in claim 27, wherein the short-range wireless network is a Bluetooth network.

30. A personal audio system as recited in claim 24, wherein the head-worn wearable electronic device includes an accelerometer.

31. A personal audio system as recited in claim 24, wherein the head-worn wearable electronic device includes a plurality of circuit boards, each circuit board including at least one integrated circuit mounted thereto.

32. A personal audio system as recited in claim 31, wherein at least one of the circuit boards is a flexible printed circuit board.

33. A personal audio system as recited in claim 24, wherein the head-worn wearable electronic device includes a touch sensitive surface.

34. A personal audio system as recited in claim 33, wherein the touch sensitive surface is configured to detect a user input, the detected user input operating to at least alter operation of the head-worn wearable electronic device.

35. A personal audio system as recited in claim 34, wherein the head-worn wearable electronic device is configured to support audio output to the user, and

wherein the at least one operation of the head-worn electronic device being altered concerns control of the audio output being provided to the user.

36. A personal audio system as recited in claim 24, wherein the head-worn wearable electronic device includes a force sensor configured to receive a user input based at least on sensing force applied to the force sensor.

37. A personal audio system as recited in claim 36, wherein the force sensor is configured to detect the user input, the detected user input operating to alter at least an operation of the head-worn wearable electronic device.

38. A personal audio system as recited in claim 37, wherein the head-worn wearable electronic device is configured to support audio output to the user, and

wherein the at least one operation of the head-worn electronic device being altered concerns control of the audio output being provided to the user.

39. A personal audio system as recited in claim 24, wherein the head-worn wearable electronic device comprises a switch, the switch being configured to be activated by a mechanical force.

40. A personal audio system as recited in claim 39, wherein the switch is configured to detect a user input based on the mechanical force, the detected user input operating to at least alter operation of the head-worn wearable electronic device.

41. A personal audio system as recited in claim 40, wherein the head-worn wearable electronic device is configured to support audio output to the user, and

wherein the at least one operation of the head-worn electronic device being altered concerns control of the audio output being provided to the user.

42. A personal audio system as recited in claim 24, wherein the head-worn wearable electronic device comprises:

a first head-worn structure including at least a first speaker of the pair of speakers, the first speaker being wearable proximate to a first ear of the user; and

a second head-worn structure including at least a second speaker of the pair of speakers, the second speaker being wearable proximate to a second ear of the user.

43. A personal audio system as recited in claim 42, wherein the first head-worn structure comprises:

a first circuit board internal to the first head-worn structure, the first circuit board supporting at least a first integrated circuit and a second integrated circuit, the first integrated circuit and the second integrated circuit being physically attached to the first circuit board, and the first integrated circuit being electrically connected to the second integrated circuit or another electronic component.

44. A personal audio system as recited in claim 43, wherein the first circuit board is a flexible circuit board.

45. A personal audio system as recited in claim 42, wherein the first head-worn structure comprises:

a user input device, the user input device being configured to receive a user input, the user input device is based on at least capacitive effect, wherein the user input being received induces at least a capacitive change to produce at least an electrical response.

46. A personal audio system as recited in claim 45, wherein the user input device is configured to distinguish at least a direction of the user input with respect to the user input device.

47. A personal audio system as recited in claim 46, wherein the user input device is configured to detect at least a sliding of a finger action with respect to the user input device.

48. A personal audio system as recited in claim 45, wherein the user input device is configured to distinguish at least whether the user input pertains to a forward sliding action or a backward sliding action with respect to the user input device.

49. A personal audio system as recited in claim 48, wherein the head-worn wearable electronic device comprises:

a second circuit board internal to the second head-worn structure, the second circuit board supporting at least a third integrated circuit and a fourth integrated circuit, the third integrated circuit and the fourth integrated circuit being physically attached to the second circuit board, and the third integrated circuit being electrically connected to the fourth integrated circuit or another electronic component.

50. A personal audio system as recited in claim 42, wherein the first head-worn structure of the head-worn wearable electronic device comprises:

a first microphone configured to pick up at least audio input from at least the user, the first microphone being at least partially in the first head-worn structure and is positioned to be directed towards the user when the first head-worn structure is being worn by the user; and

a second microphone configured to pick up at least ambient sound input associated with an environment in the vicinity of the first head-worn structure, the second microphone being positioned to be directed away from the user when the head-worn wearable electronic device is being worn by the user.

51. A personal audio system as recited in claim 42,

wherein the first head-worn structure comprises:

a first circuit board internal to the first head-worn structure, the first circuit board supporting at least a first integrated circuit, the first integrated circuit being physically attached to the first circuit board,

wherein the first integrated circuit includes at least a processing unit, and

wherein the processing unit is configured to:

determine an ambient sound level; and

amplify audio output from the first speaker dependent at least in part on the ambient sound level.

52. A personal audio system as recited in claim 42,

wherein the first head-worn structure of the wearable electronic device comprises:

a battery internal to the first head-worn structure; and

at least one conductive element that facilitates electrical coupling with the battery, the at least one conductive element is at least partially internal to the first head-worn structure but remains at least partially exposed external to the first head-worn structure, and the at least one conductive element comprises at least one conductive pad,

wherein the battery is able to be electrically coupled via the at least one conductive element to a charging apparatus and charged when at least the first head-worn structure of the head-worn wearable electronic device is placed within the charging apparatus, and

wherein the electrical coupling of the at least one conductive element with the charging apparatus is supported by at least a magnetic element.

53. A personal audio system as recited in claim 52, wherein the head-worn wearable electronic device comprises:

a microphone at least partially internal to the first head-worn structure,

wherein the head-worn wearable electronic device is configured to receive a voice input via the microphone, determine a requested operation from the voice input using voice recognition, and control an operation by the head-worn wearable electronic device based on the requested operation.

54. A personal audio system as recited in claim 42, wherein the first head-worn structure comprises:

an infrared emitter configured to at least direct infrared signals towards the user when at least the first head-worn structure of the head-worn wearable electronic device is being worn; and

an infrared detector configured to detect infrared radiation reflected back from the user when at least the first head-worn structure of the head-worn wearable electronic device is being worn.

55. A personal audio system as recited in claim 54, wherein electronic circuitry within the first head-worn structure is configured to facilitate determining whether the first head-worn structure is being worn by the user based on at least the detected infrared radiation.

56. A personal audio system as recited in claim 42, wherein the first head-worn structure comprises:

a radiation detector configured to capture radiation data; and

first electronic circuitry provided within the first head-worn structure and electrically connected to the radiation detector, the first electronic circuitry configured to process at least the radiation data captured by the radiation detector.

57. A personal audio system as recited in claim 56, wherein the first electronic circuitry is configured to determine whether the first head-worn structure is being worn by a user based on at least the processed radiation data.

58. A personal audio system as recited in claim 57, wherein the radiation detector comprises a photodetector.

59. A personal audio system as recited in claim 42, wherein the first head-worn structure comprises first electronic circuitry configured to provide audio alerts to the user via the first speaker.

60. A personal audio system as recited in claim 59, wherein the audio alerts are dependent on one or more user preference settings.

61. A personal audio system as recited in claim 42,

wherein the first head-worn structure of the head-worn wearable electronic device comprises:

a first microphone configured to pick up at least audio input from at least the user, the first microphone being at least partially in the first head-worn structure; and

a second microphone configured to pick up at least ambient sound input associated with an environment in the vicinity of the first head-worn structure,

wherein the second microphone is positioned to be further away from mouth of the user than the first microphone when at least the first head-worn structure of the head-worn wearable electronic device is being worn.

62. A personal audio system as recited in claim 42, wherein the first head-worn structure comprises:

a physical condition sensor configured to acquire data pertaining to a physical condition of the user, the physical condition sensor being provided at least partially internal to the first head-worn structure.

63. A personal audio system as recited in claim 62, wherein the acquired data by the physical condition sensor includes data pertaining to or dependent on heart beats of the user.

64. A personal audio system as recited in claim 24, wherein the head-worn wearable electronic device comprises:

a head-worn structure including at least a first microphone, a second microphone, a speaker and a processing unit;

wherein the first microphone is configured to pick up at least audio input from at least the user,

wherein the second microphone is configured to pick up at least environmental audio input associated with an environment in the vicinity of the head-worn wearable electronic device, and

wherein the processing unit is configured to process the audio input from at least the user via the first microphone to remove at least a portion of the environmental audio input associated with the environment picked up via the second microphone.

65. A personal audio system as recited in claim 64,

wherein the audio input from at least the user picked-up via the first microphone includes at least a voice input, and

wherein the environmental audio input associated with the environment includes at least ambient noise.

66. A personal audio system as recited in claim 64, wherein the processing unit is configured to process the audio input from at least the user picked-up via the first microphone to remove at least a portion of the environmental audio input picked-up via the second microphone.

67. A personal audio system as recited in claim 64,

wherein the first microphone is at least partially in the head-worn structure and is positioned so as to be directed towards the user of the head-worn structure, and

wherein the second microphone is at least partially in the head-worn structure so as to be directed away from the user of the head-worn structure.

68. A personal audio system as recited in claim 67, wherein the processing unit is configured to process the audio input picked-up via at least the first microphone to remove at least a portion of the environmental audio input picked-up via the second microphone.

69. A personal audio system as recited in claim 68,

wherein the audio input from at least the user includes at least a voice input, and

wherein the environmental audio input includes at least ambient noise.

70. A personal audio system as recited in claim 24, wherein the head-worn wearable electronic device comprises:

a head-worn structure comprising at least two microphones and a processing unit,

wherein the at least two microphones are configured to pick up (i) at least audio input from at least the user and (ii) at least environmental audio input associated with environmental sound in the vicinity of the head-worn structure, and

wherein the processing unit is configured to:

determine an environmental sound level based on at least the environmental audio input; and

amplify at least a portion of the audio input from the first microphone, with the amplification being at least in part dependent on the environmental sound level.

71. A personal audio system as recited in claim **24**,

wherein the head-worn wearable electronic device comprises at least a first microphone, a second microphone and a processing unit,

wherein the first microphone is configured to pick up at least audio sound from at least the user,

wherein the second microphone is configured to pick up at least ambient noise associated with an environment in the vicinity of the head-worn wearable electronic device, and

wherein the processing unit is configured to:

determine an ambient noise level based on at least the ambient noise; and

modify at least a portion of the audio sound picked-up via the first microphone, with the modification being at least in part dependent on the ambient noise level.

72. A personal audio system as recited in claim **24**,

wherein the head-worn wearable electronic device comprises at least a first microphone, a second microphone and a processing unit,

wherein the first microphone is configured to pick up at least audio sound from at least the user,

wherein the second microphone is configured to pick up at least ambient noise associated with an environment in the vicinity of the head-worn wearable electronic device,

wherein the processing unit is configured to:

determine an ambient noise level based on at least the ambient noise; and

modify at least a portion of the audio sound picked-up via the first microphone, with the modification being at least in part dependent on the ambient noise level,

wherein the head-worn wearable electronic device comprises at least a rechargeable battery and at least one conductive element,

wherein the rechargeable battery is able to be electrically coupled via the at least one conductive element to a charging apparatus and charged when the head-worn wearable electronic device is placed within the charging apparatus,

wherein the mobile communication device is configured to wirelessly communicate with the head-worn wearable electronic device over a wireless network, and

wherein the mobile communication device is or includes a mobile phone,

wherein the head-worn wearable electronic device is configured to receive a voice input via the first microphone, determine a requested operation from the voice input using voice recognition, and control an operation by the head-worn wearable electronic device based on the requested operation.

73. A personal audio system as recited in claim **72**, wherein the head-worn wearable electronic device comprises:

an infrared emitter configured to at least direct infrared signals towards the user when the head-worn wearable electronic device is being worn;

an infrared detector configured to detect infrared radiation reflected back from the user when the head-worn wearable electronic device is being worn; and

electronic circuitry configured to facilitate determining whether the head-worn wearable electronic device is being worn by the user based on at least the detected infrared radiation.

74. A personal audio system as recited in claim **73**, wherein the electrical coupling of the at least one conductive element with the charging apparatus is supported by at least a magnetic element.

75. A personal audio system operable to at least generate customized audio output, comprising:

a pair of speakers, each of the speakers being configured to be wearable proximate to an ear of a user; and

a mobile communication device at least for supporting audio output, the mobile communication device configured to store at least a hearing characteristic associated with the user, the stored hearing characteristic associated with the user at least characterizes hearing impairment regarding the user's ability to hear, the mobile communication device configured to produce customized audio output signals for the user based on at least the stored hearing characteristics associated with the user such that the customized audio output signals at least compensate for the hearing impairment regarding the user's ability to hear, the mobile communication device configured to produce the customized audio output signals using at least signal amplification, and the mobile communication device configured to transmit the customized audio output signals to the pair of speakers,

wherein each of the speakers is configured to receive at least a portion of the customized audio output signals transmitted by the mobile communication device, and

wherein each of the speakers is configured to generate at least a portion of the customized audio output for the user in accordance with at least the portion of the customized audio output signals being received.

76. A personal audio system as recited in claim **75**, wherein each of the speakers being configured to be at least partially inserted into an ear of the user.

* * * * *