US007150526B2

(12) **United States Patent**
Jannard et al.

(10) **Patent No.: US 7,150,526 B2**
(45) **Date of Patent: Dec. 19, 2006**

(54) **WIRELESS INTERACTIVE HEADSET**

(75) Inventors: **James Jannard**, Eastsound, WA (US); **Davin Saderholm**, Mission Viejo, CA (US); **Carlos Reyes**, Rancho Santa Margarita, CA (US); **Colin Baden**, Irvine, CA (US); **Sumner Lane Bruns**, Annapolis, MD (US)

(73) Assignee: **Oakley, Inc.**, Foothill Ranch, CA (US)

(*) Notice: Subject to any disclaimer, the term of this patent is extended or adjusted under 35 U.S.C. 154(b) by 0 days.

(21) Appl. No.: **10/628,831**

(22) Filed: **Jul. 28, 2003**

(65) **Prior Publication Data**

US 2004/0160573 A1 Aug. 19, 2004

Related U.S. Application Data

(63) Continuation-in-part of application No. 10/004,543, filed on Dec. 4, 2001, which is a continuation of application No. 09/585,593, filed on Jun. 2, 2000, now Pat. No. 6,325,507.

(60) Provisional application No. 60/460,154, filed on Apr. 3, 2003, provisional application No. 60/399,317, filed on Jul. 26, 2002.

(51) **Int. Cl.**
G02C 1/00 (2006.01)

(52) **U.S. Cl.** **351/158**; 351/41

(58) **Field of Classification Search** 351/158, 351/41, 123; 455/343, 344, 347, 350, 351; 704/225
See application file for complete search history.

(56) **References Cited**

U.S. PATENT DOCUMENTS

1,026,272	A	5/1912	Leveque
1,370,806	A	3/1921	Gamer
2,424,935	A	7/1947	Kimmel
2,504,524	A	4/1950	Hayward
2,688,900	A	9/1954	Silverman
3,104,290	A	2/1957	Rosemond et al.
2,856,466	A	10/1958	Gustafson et al.
2,882,348	A	4/1959	Erickson
2,947,822	A	8/1960	Matsuura
2,999,136	A	9/1961	Holt et al.
3,119,903	A	1/1964	Rosemond et al.
3,247,330	A	4/1966	Hinman
D207,919	S	6/1967	Lui Fai
3,371,979	A	3/1968	Catanzaro
D212,863	S	12/1968	Roberts
3,588,384	A	6/1971	Negley
3,665,122	A	5/1972	Weiss

(Continued)

FOREIGN PATENT DOCUMENTS

IT	00235504	4/2000

OTHER PUBLICATIONS

Motorola Bluetooth Wireless Headset User Guide.
Motorola Consumer Catalog for Phone Accessories from "www.commerce.motorola.com", web site visited on Jun. 13, 2002.

(Continued)

Primary Examiner—Hung Xuan Dang
(74) *Attorney, Agent, or Firm*—Knobbe, Martens, Olson & Bear, LLP

(57) **ABSTRACT**

A wearable audio interface includes a support for positioning the plurality of speakers juxtaposed to and spaced from the ears of a wearer. The audio device can include wireless networking electronics so as to allow the device to interact with other wireless network devices.

28 Claims, 28 Drawing Sheets

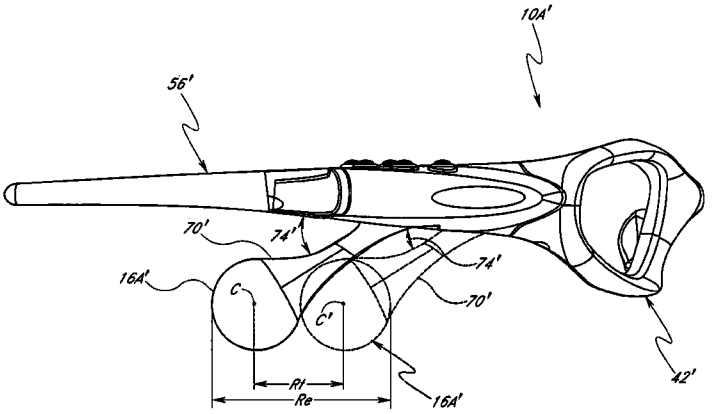

U.S. PATENT DOCUMENTS

3,809,829	A		5/1974	Vignini et al.
3,853,393	A		12/1974	Fila et al.
3,883,701	A		5/1975	Delorenzo
4,149,780	A		4/1979	Young
4,537,612	A		8/1985	Borrelli et al.
4,550,984	A		11/1985	Reymond
4,683,587	A		7/1987	Silverman
4,712,244	A		12/1987	Zwicker
4,773,095	A		9/1988	Zwicker
4,803,487	A		2/1989	Willard et al.
4,806,011	A		2/1989	Bettinger
4,856,086	A		8/1989	McCullough
4,882,769	A		11/1989	Gallimore
4,902,120	A		2/1990	Weyer
4,904,078	A		2/1990	Gorike
5,020,150	A		5/1991	Shannon
5,029,216	A		7/1991	Jhabvala
5,137,342	A		8/1992	Jannard et al.
5,159,639	A		10/1992	Shannon et al.
5,249,001	A		9/1993	Jannard
5,281,957	A		1/1994	Schoolman
5,327,178	A	*	7/1994	McManigal 351/158
5,335,285	A		8/1994	Gluz
5,353,378	A		10/1994	Hoffman et al.
5,367,345	A		11/1994	Da Silva
5,404,385	A		4/1995	Ben-Haim
RE35,051	E		10/1995	Moore
5,533,130	A		7/1996	Staton
5,563,951	A		10/1996	Wang et al.
5,579,400	A		11/1996	Ballein
5,581,492	A		12/1996	Janik
5,606,743	A		2/1997	Vogt et al.
5,608,808	A		3/1997	Da Silva
5,613,222	A		3/1997	Guenther
5,617,477	A		4/1997	Boyden
5,634,201	A		5/1997	Mooring
5,654,786	A		8/1997	Bylander
5,658,502	A		8/1997	Hughes
5,680,465	A		10/1997	Boyden
5,682,434	A		10/1997	Boyden
5,694,475	A		12/1997	Boyden
5,708,724	A		1/1998	Burris et al.
5,715,323	A		2/1998	Walker
5,717,479	A		2/1998	Rickards
5,721,783	A		2/1998	Anderson
5,737,436	A		4/1998	Boyden
5,757,929	A		5/1998	Wang et al.
5,781,272	A		7/1998	Bright et al.
5,796,341	A		8/1998	Stratiotis
5,805,261	A		9/1998	Houston et al.
5,835,185	A		11/1998	Kallman et al.
5,853,005	A		12/1998	Scanlon
5,886,822	A		3/1999	Spitzer
5,889,843	A		3/1999	Singer et al.
5,892,564	A		4/1999	Rahn
5,953,000	A		9/1999	Weirich
5,953,434	A		9/1999	Boyden
5,988,812	A		11/1999	Wingate
D418,153	S		12/1999	Haney
6,010,216	A		1/2000	Jesiek
6,012,812	A	*	1/2000	Rickards 351/158
6,057,966	A		5/2000	Carroll et al.
D426,845	S		6/2000	Green et al.
6,091,546	A		7/2000	Spitzer
6,091,832	A		7/2000	Shurman et al.
D430,145	S		8/2000	Boyden et al.
6,106,116	A		8/2000	Houston et al.
6,108,197	A		8/2000	Janik
6,126,595	A		10/2000	Amano et al.
D435,058	S		12/2000	Green et al.
6,157,533	A		12/2000	Sallam et al.
6,176,576	B1		1/2001	Green et al.
6,181,956	B1		1/2001	Koskan
6,192,253	B1		2/2001	Charlier et al.
6,204,974	B1		3/2001	Spitzer
6,211,799	B1		4/2001	Post et al.
6,212,414	B1		4/2001	Alameh et al.
6,218,958	B1		4/2001	Eichstaedt et al.
6,230,327	B1		5/2001	Briand et al.
6,231,181	B1		5/2001	Swab
6,233,344	B1		5/2001	Clegg et al.
6,233,345	B1		5/2001	Urwyler
6,239,778	B1		5/2001	Palffy-Muhoray et al.
6,252,970	B1		6/2001	Poon et al.
D445,416	S		7/2001	Glezerman
6,272,359	B1		8/2001	Kivela et al.
6,280,838	B1		8/2001	Bernards et al.
6,285,757	B1		9/2001	Carroll et al.
6,301,050	B1		10/2001	DeLeon
6,301,367	B1		10/2001	Boyden et al.
6,301,593	B1		10/2001	Toyosato
6,311,155	B1	*	10/2001	Vaudrey et al. 704/225
6,312,811	B1		11/2001	Frigoli et al.
6,314,091	B1		11/2001	LaRowe, Jr. et al.
6,325,507	B1		12/2001	Jannard et al.
6,347,095	B1		2/2002	Tang et al.
6,349,001	B1		2/2002	Spitzer
6,350,129	B1		2/2002	Gorlick
6,351,468	B1		2/2002	LaRowe, Jr. et al.
6,356,392	B1		3/2002	Spitzer
6,384,982	B1		5/2002	Spitzer
6,392,798	B1		5/2002	Newkirk
6,409,338	B1		6/2002	Jewell
6,421,031	B1		7/2002	Ronzani et al.
D462,708	S		9/2002	Miller et al.
D462,946	S		9/2002	Beraut et al.
6,456,721	B1		9/2002	Fukuda
6,490,362	B1		12/2002	Clegg et al.
6,510,325	B1		1/2003	Mack, II et al.
6,519,475	B1		2/2003	Kim
6,523,006	B1		2/2003	Ellis et al.
6,529,804	B1		3/2003	Draggon et al.
6,549,122	B1		4/2003	Depta
6,560,449	B1		5/2003	Liu
6,564,047	B1		5/2003	Steele et al.
6,567,651	B1		5/2003	Whitley
6,580,405	B1		6/2003	Yamazaki et al.
6,582,075	B1		6/2003	Swab et al.
6,618,099	B1		9/2003	Spitzer
6,629,076	B1		9/2003	Haken
6,639,706	B1		10/2003	Ziv et al.
6,687,486	B1		2/2004	Grzeczkowski
6,690,807	B1		2/2004	Meyer
6,691,028	B1		2/2004	Bullock et al.
6,717,533	B1		4/2004	Seaberg et al.
6,724,354	B1		4/2004	Spitzer et al.
6,725,022	B1		4/2004	Clayton et al.
6,728,531	B1		4/2004	Lee et al.
6,729,726	B1		5/2004	Miller et al.
6,735,435	B1		5/2004	Newell et al.
6,763,119	B1		7/2004	Lee
6,766,182	B1		7/2004	Janninck et al.
6,769,767	B1		8/2004	Swab et al.
6,929,365	B1		8/2005	Swab et al.
6,966,647	B1		11/2005	Jannard et al.
7,004,582	B1		2/2006	Jannard et al.
2002/0098877	A1		7/2002	Glezerman
2002/0118825	A1		8/2002	Mitra
2002/0159023	A1		10/2002	Swab
2002/0176330	A1		11/2002	Ramonowski et al.
2002/0197961	A1		12/2002	Warren
2003/0003969	A1		1/2003	Tong et al.
2003/0022690	A1		1/2003	Beyda et al.
2003/0067585	A1		4/2003	Miller et al.

2003/0068057	A1	4/2003	Miller et al.
2003/0073460	A1	4/2003	Van Pelt et al.
2004/0000733	A1	1/2004	Swab et al.
2004/0029582	A1	2/2004	Swab et al.
2004/0156012	A1	8/2004	Jannard et al.
2004/0157649	A1	8/2004	Jannard et al.
2004/0160572	A1	8/2004	Jannard et al.
2004/0239874	A1	12/2004	Swab et al.
2005/0046789	A1	3/2005	Jannard et al.
2005/0046790	A1	3/2005	Jannard et al.
2005/0128431	A1	6/2005	Jannard et al.
2005/0185815	A1	8/2005	Rickards
2005/0201585	A1	9/2005	Jannard et al.

OTHER PUBLICATIONS

Hands-Free Profile (HFP).

Headset Profile from Bluetooth Specification Version 1.1, Feb. 22, 2001, pp. 198-224.

How Bluetooth Works from "www.howstuffworks.com", web site visited on Jun. 11, 2002.

Special Product Review "ID Magazine", Aug. 2002, p. 179.

"Substance and Style" by Motorola and Frog Design, Motorola. *Time* Nov. 17, 2003.

* cited by examiner

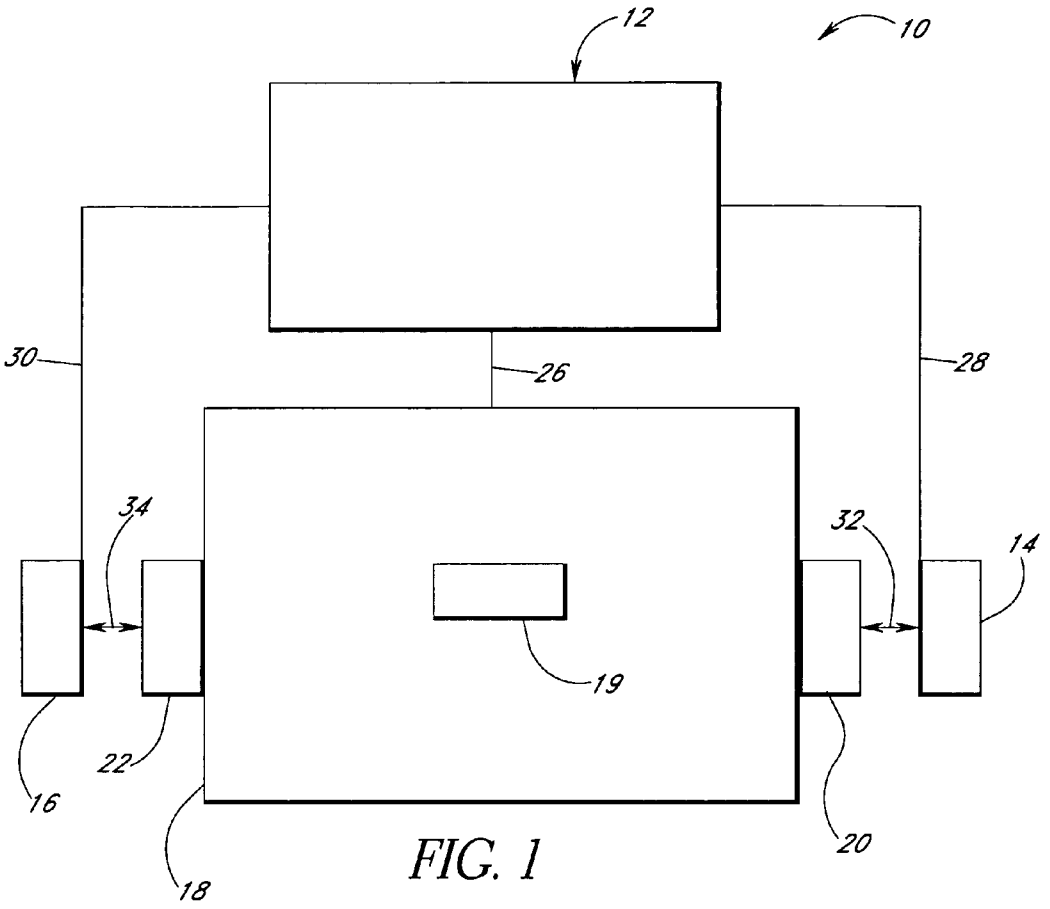

FIG. 1

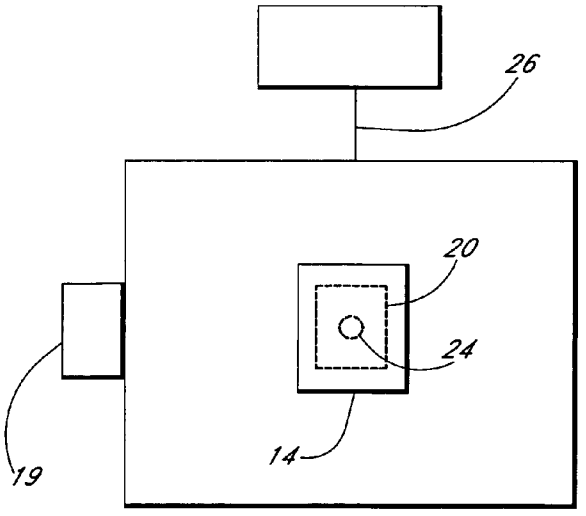

FIG. 2

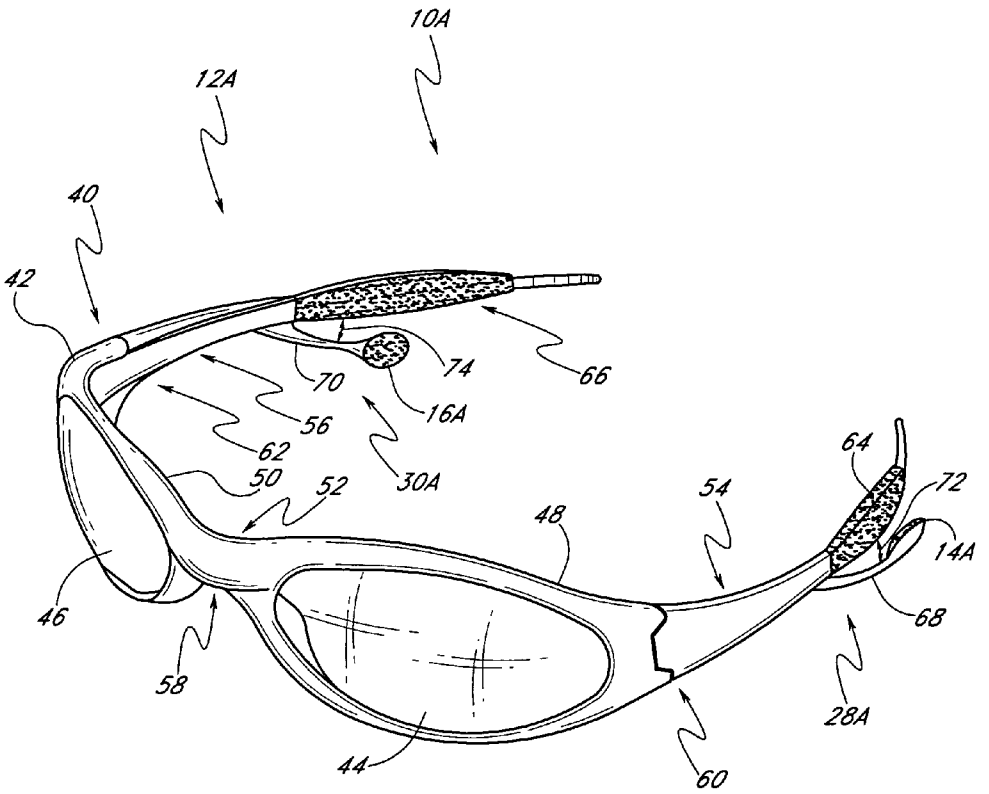
10A
12A
40
42
74
66
70
16A
56
62
30A
50
52
64
72
54
48
14A
46
68
58
28A
44
60

FIG. 3A

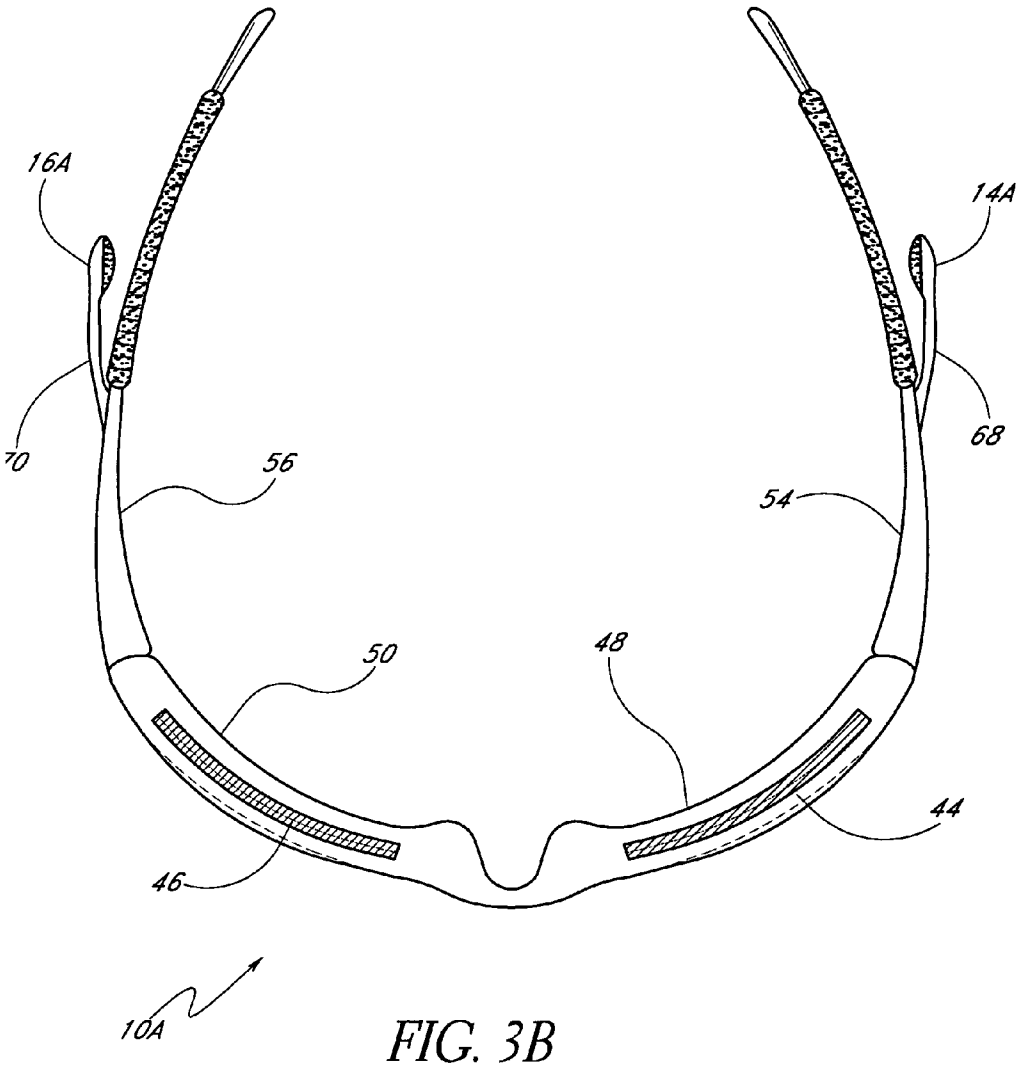

FIG. 3B

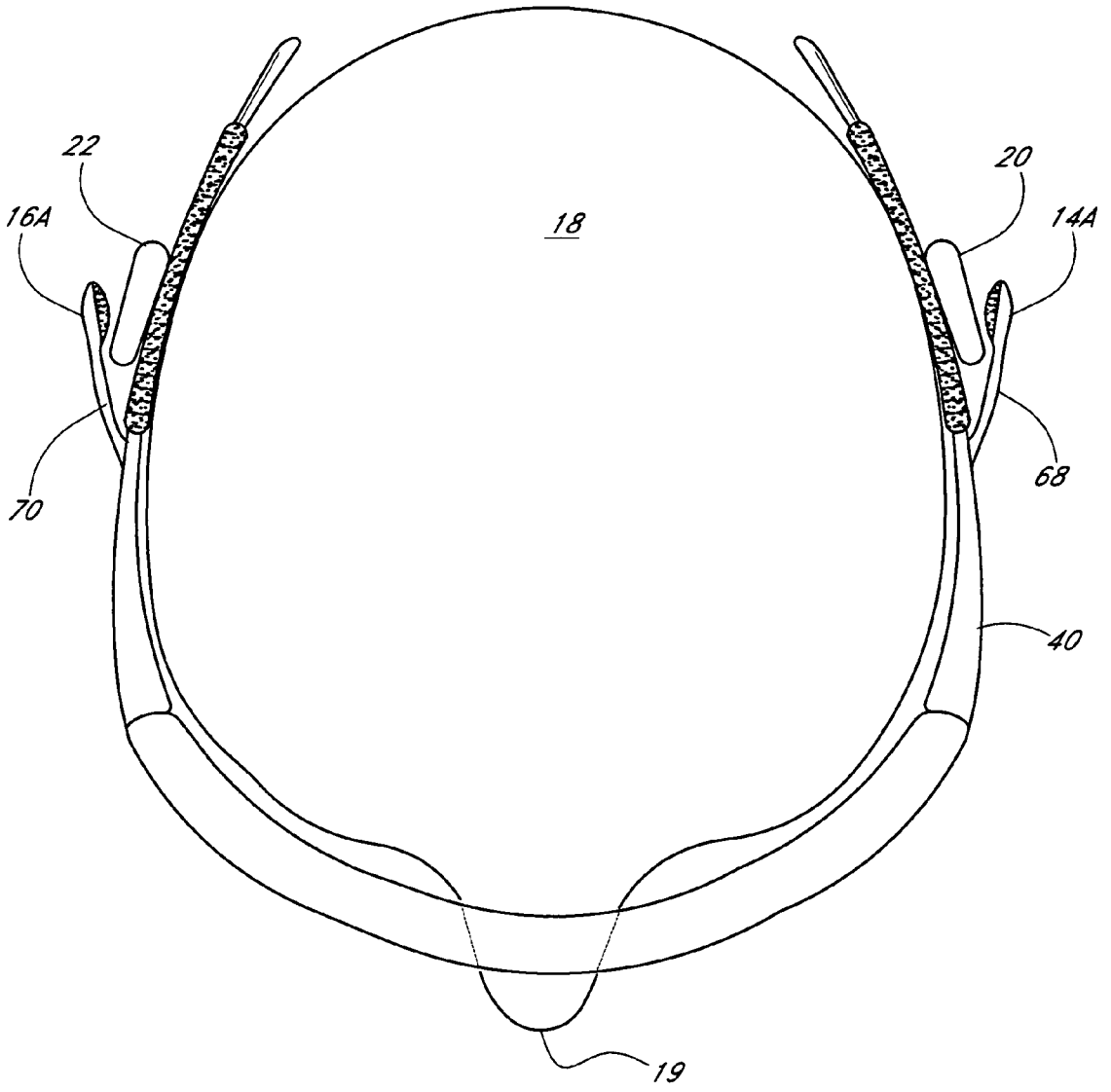

FIG. 3C

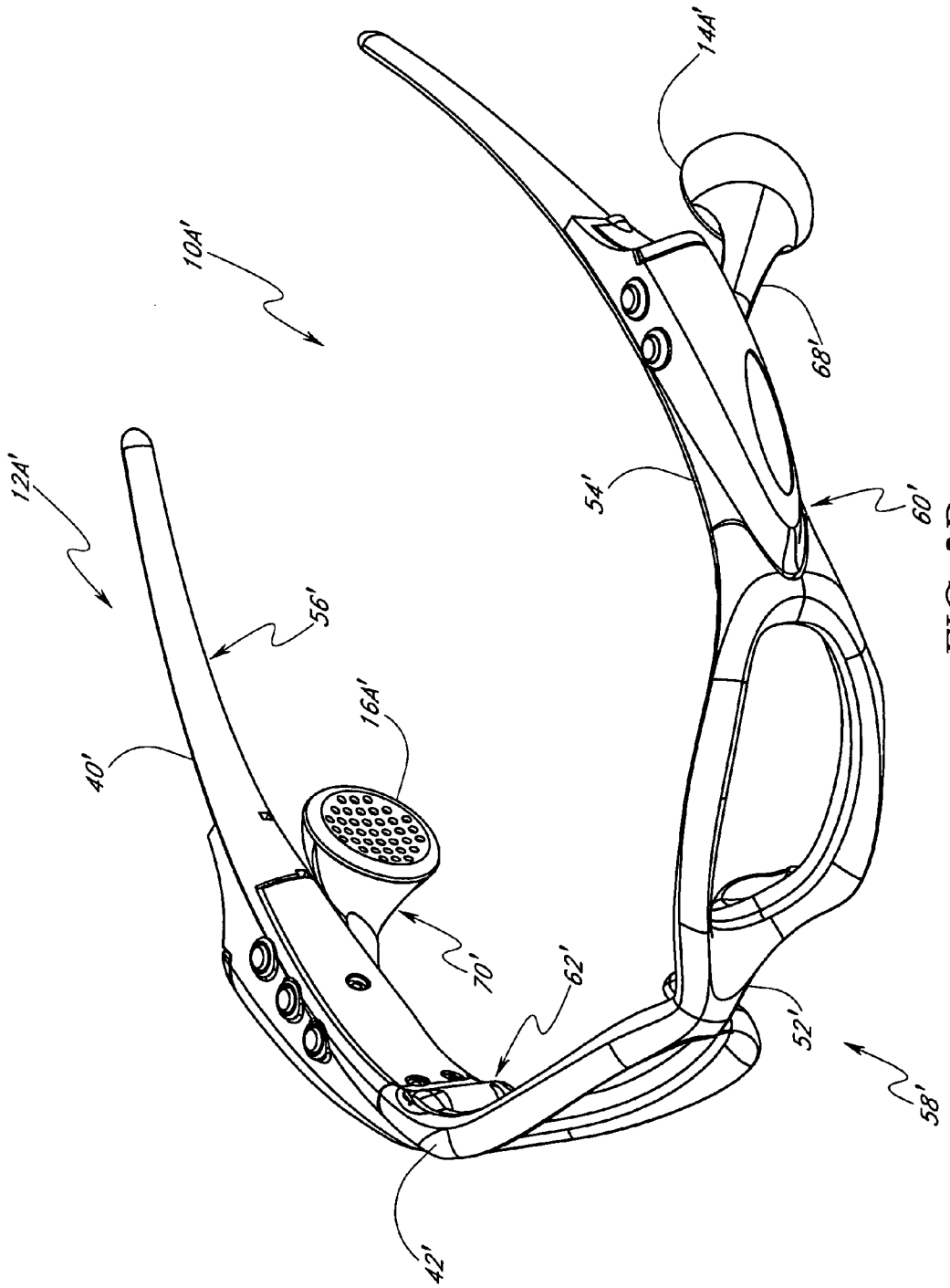

FIG. 3D

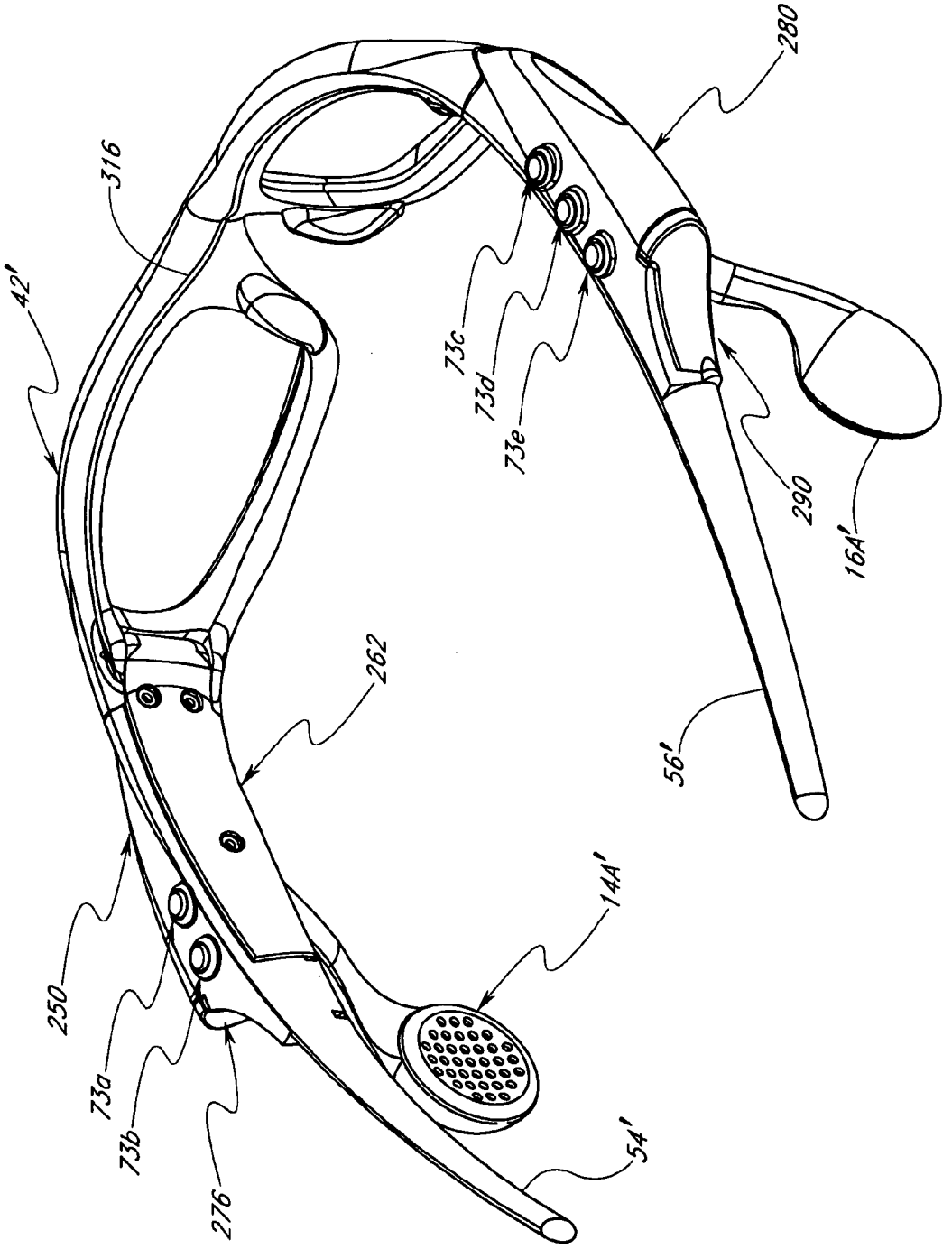

FIG. 3E

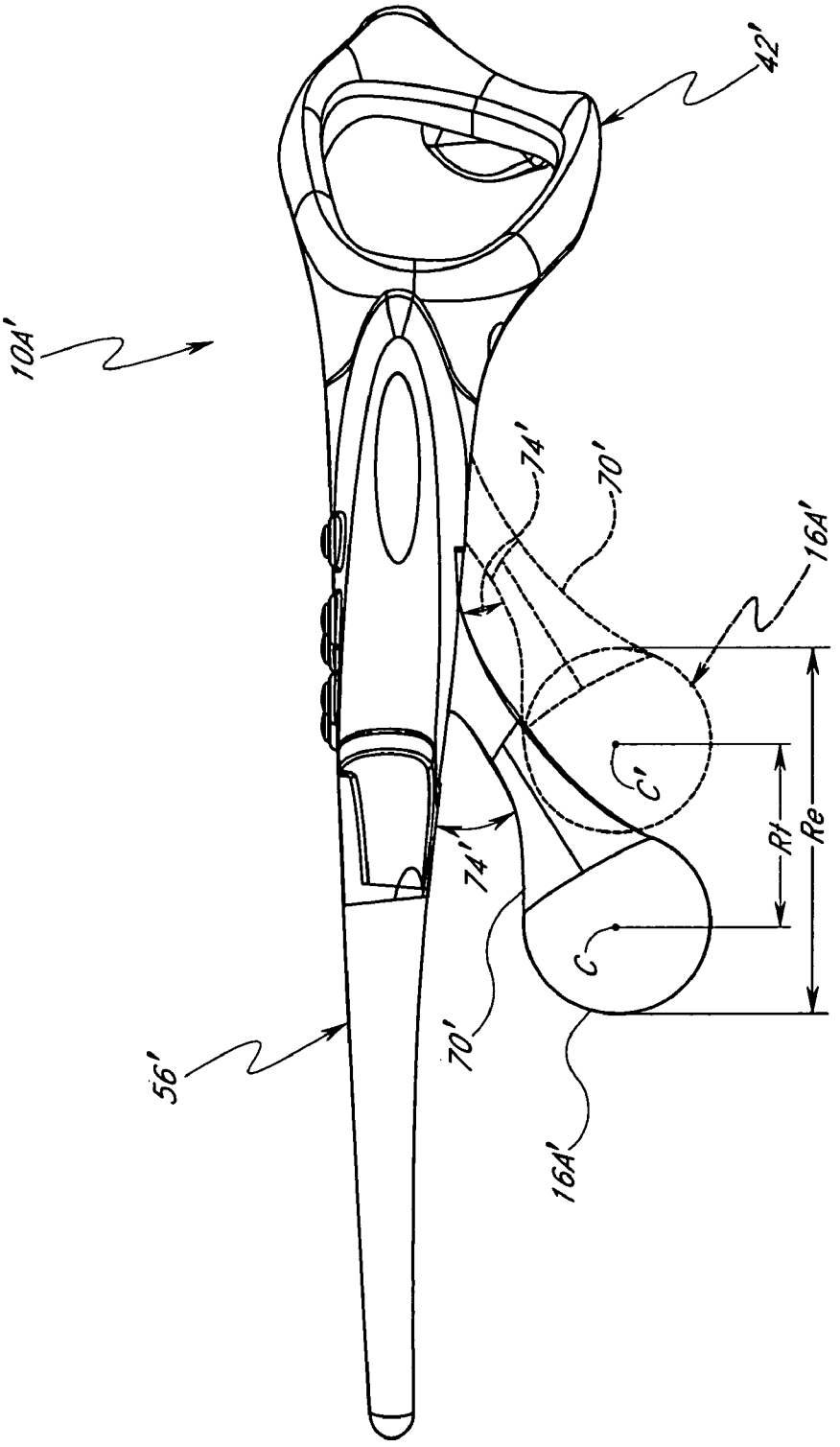

FIG. 3F

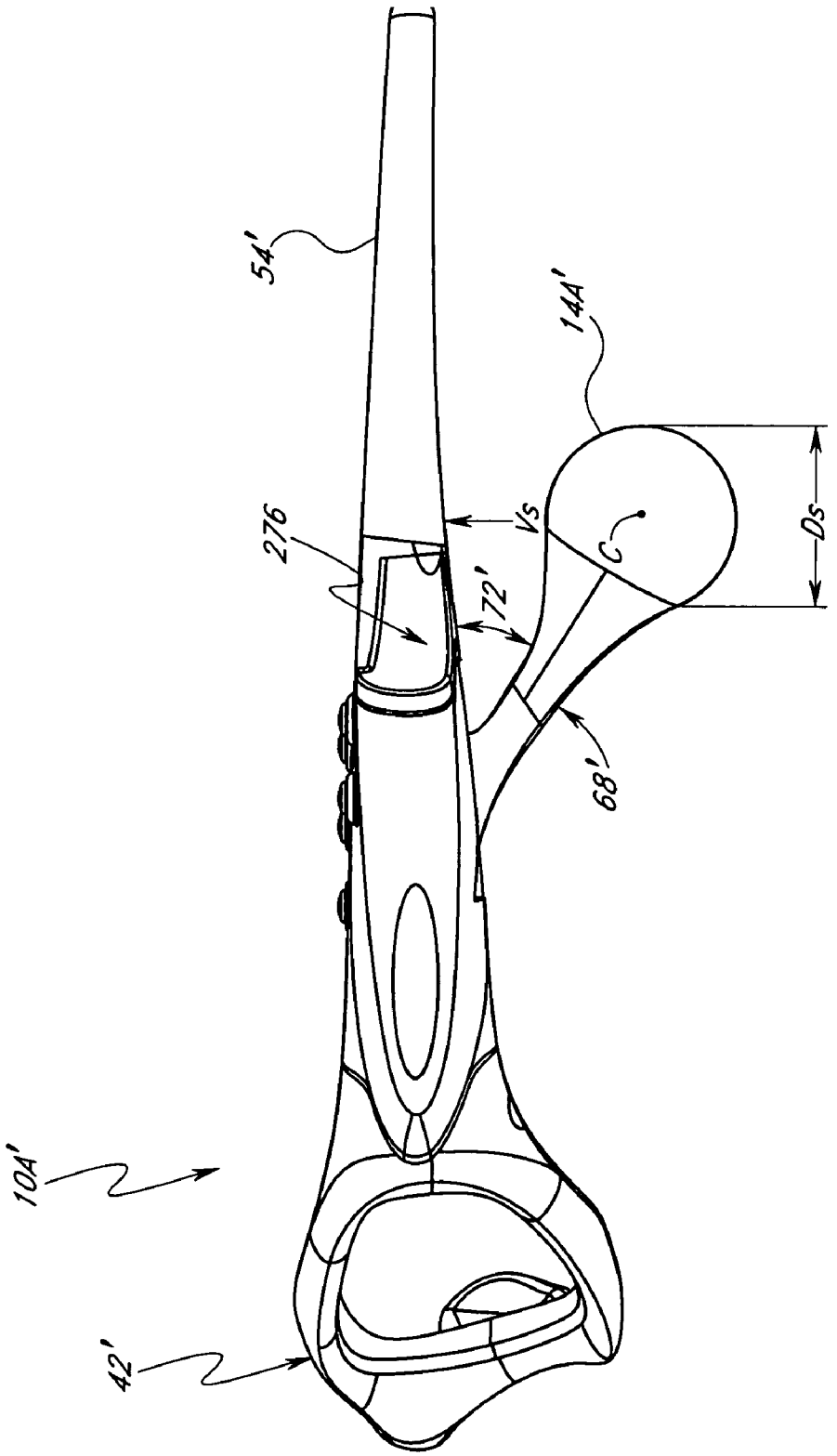

FIG. 3G

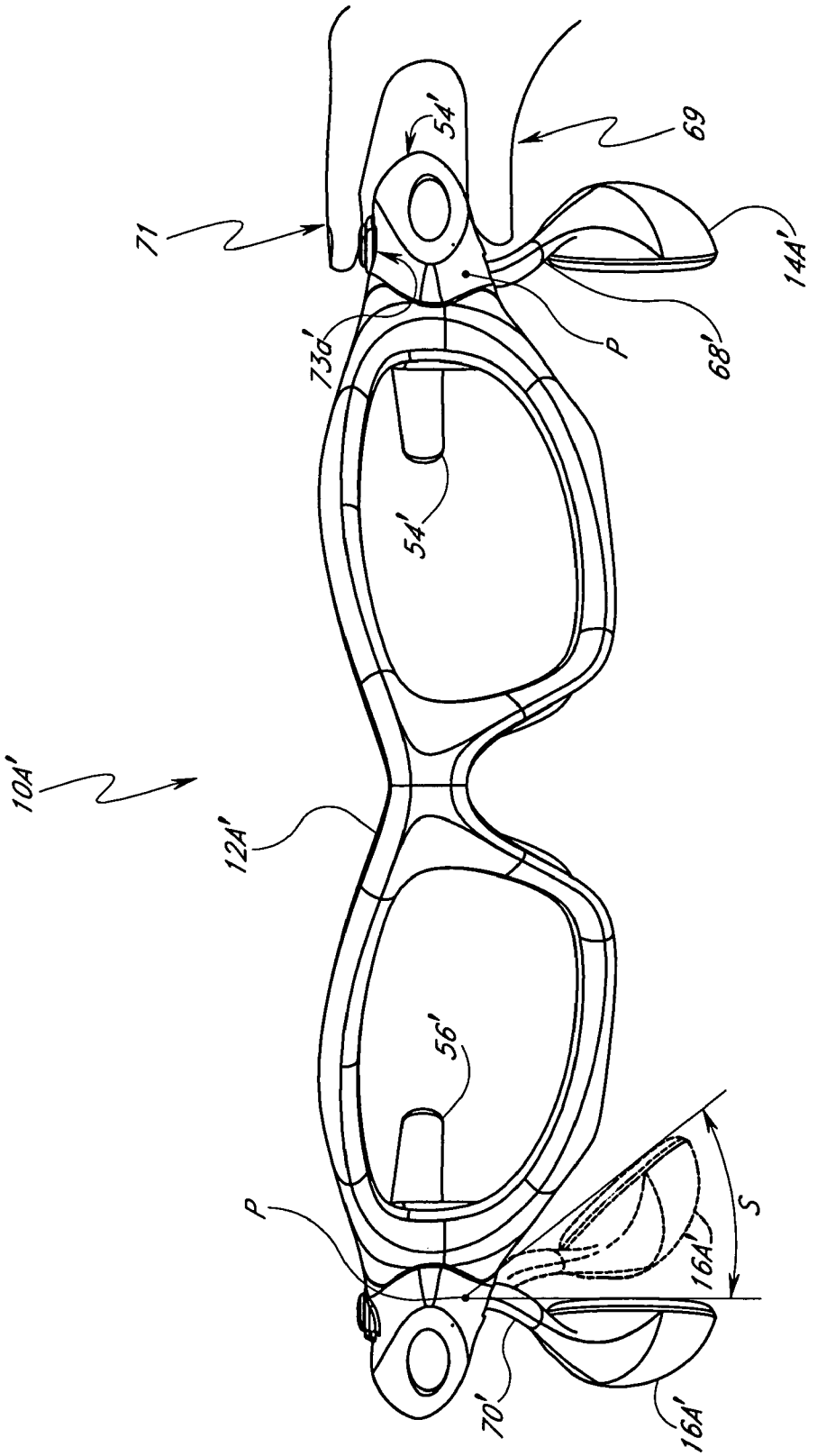

FIG. 3H

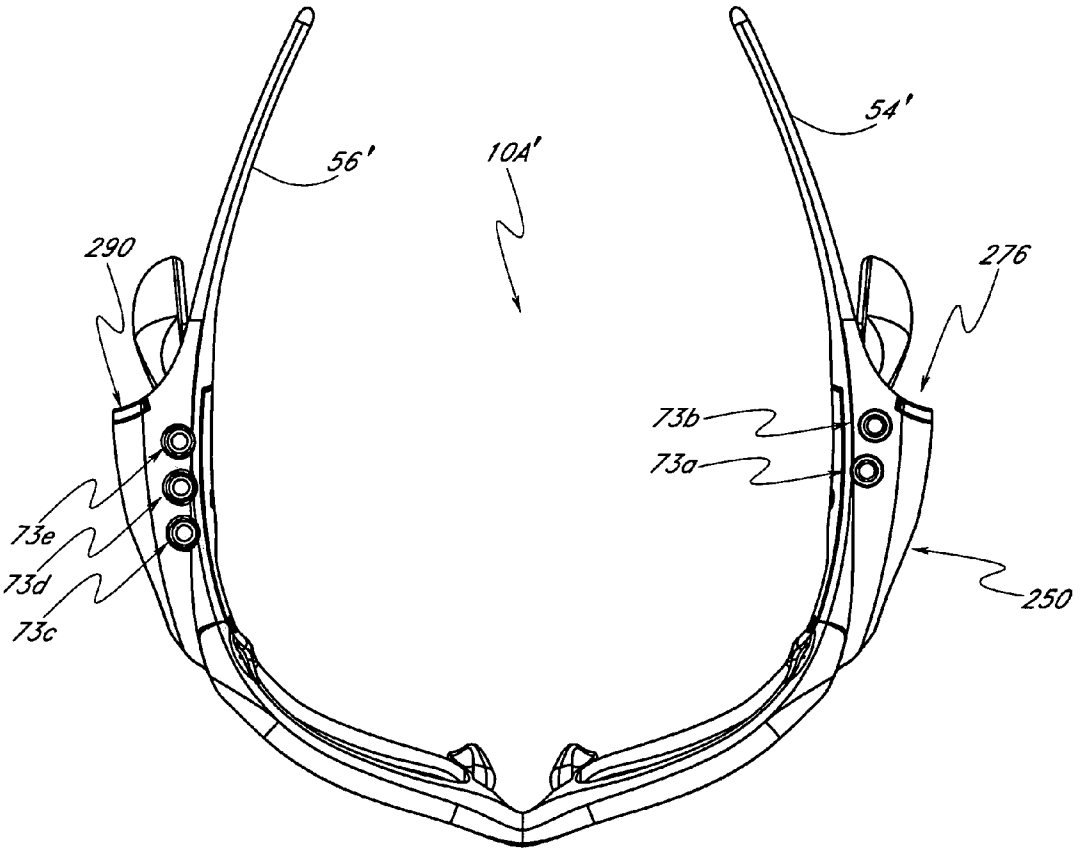

FIG. 3I

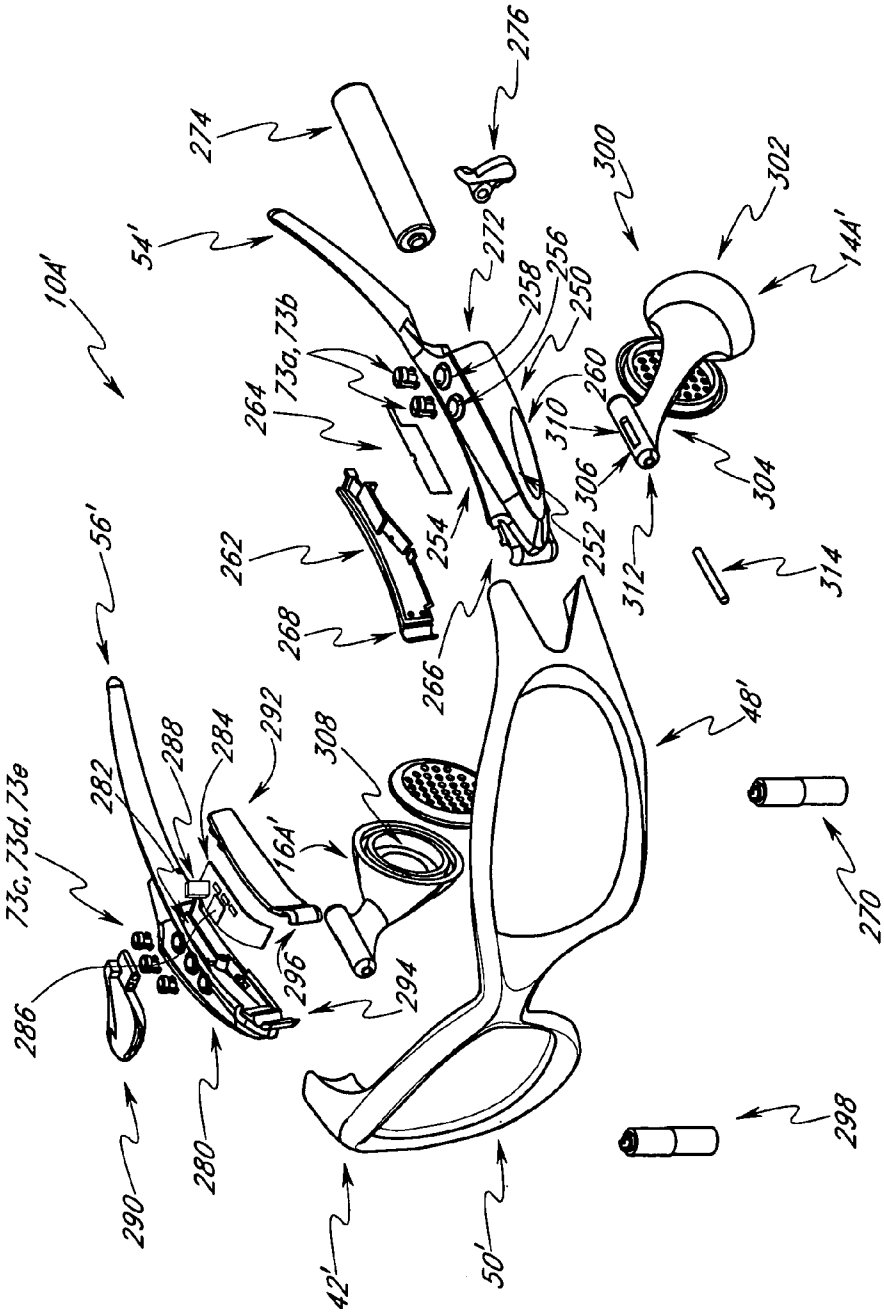
10A'
54'
274
276
272
300
302
14A'
258
256
250
73a,73b
264
260
310
306
304
262
254
252
312
314
268
266
56'
48'
292
308
284
288
282
73c,73d,73e
16A'
270
286
296
294
290
280
298
42'
50'

FIG. 3J

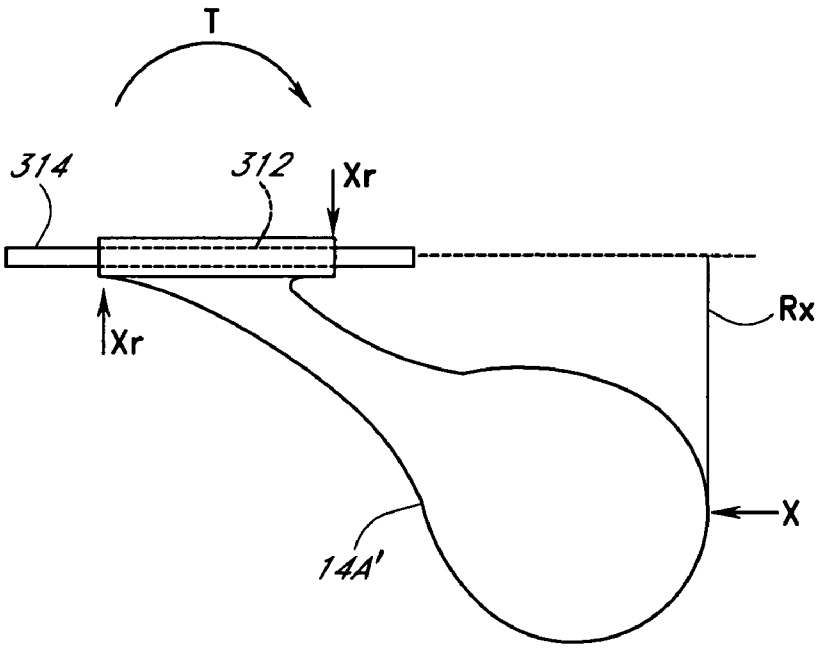

FIG. 3K

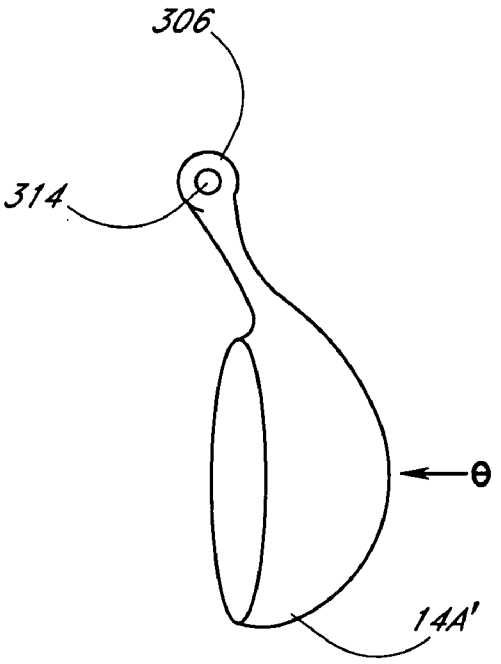

FIG. 3L

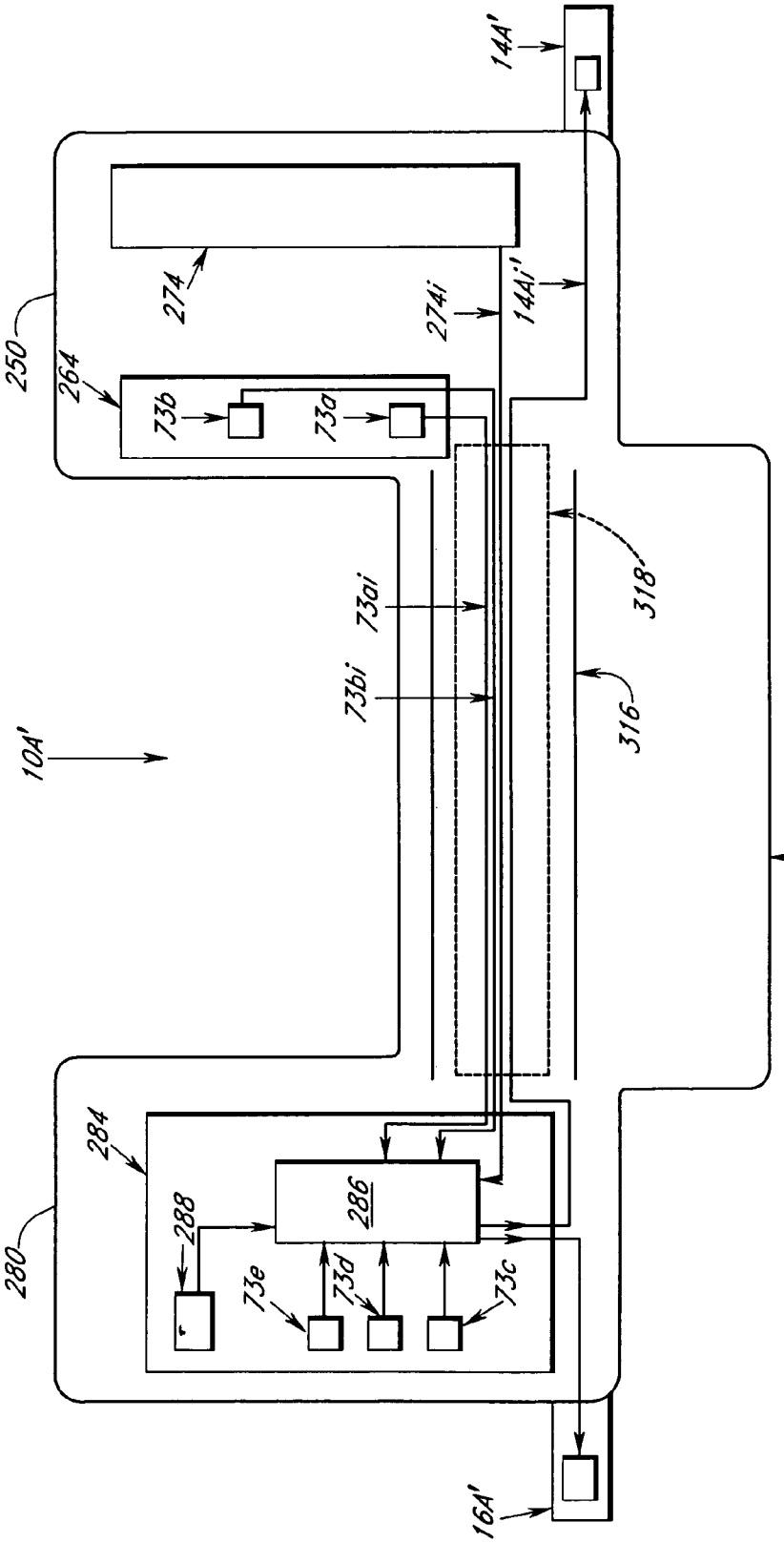
144'
274
274i
144i''
250
264
73b
73a
73ai
73bi
318'
316
104'
42'
284
286
288
280
73e
73d
73c
164'

FIG. 3M

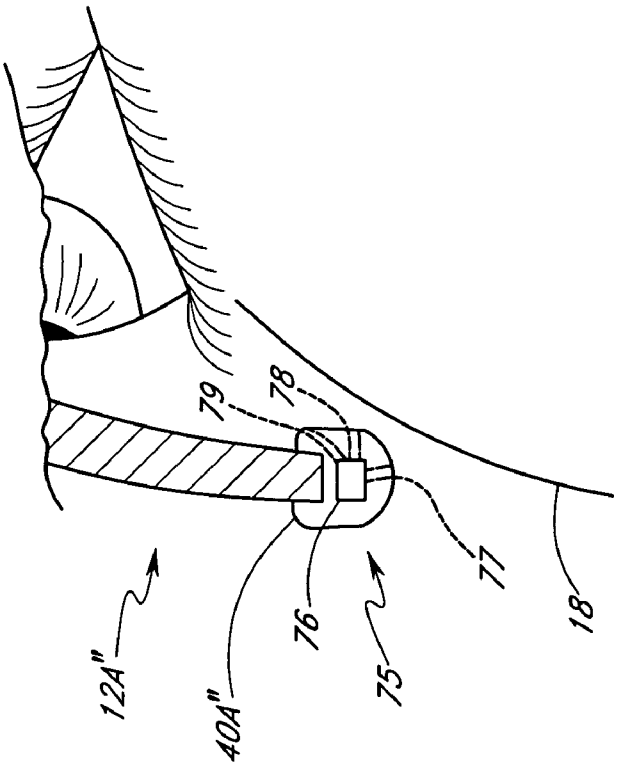

FIG. 4B

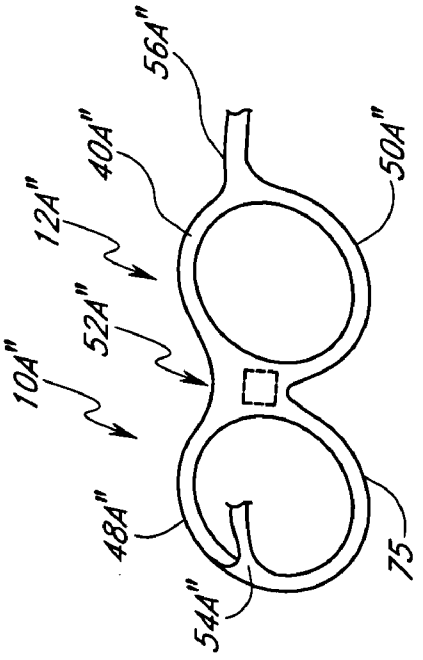

FIG. 4A

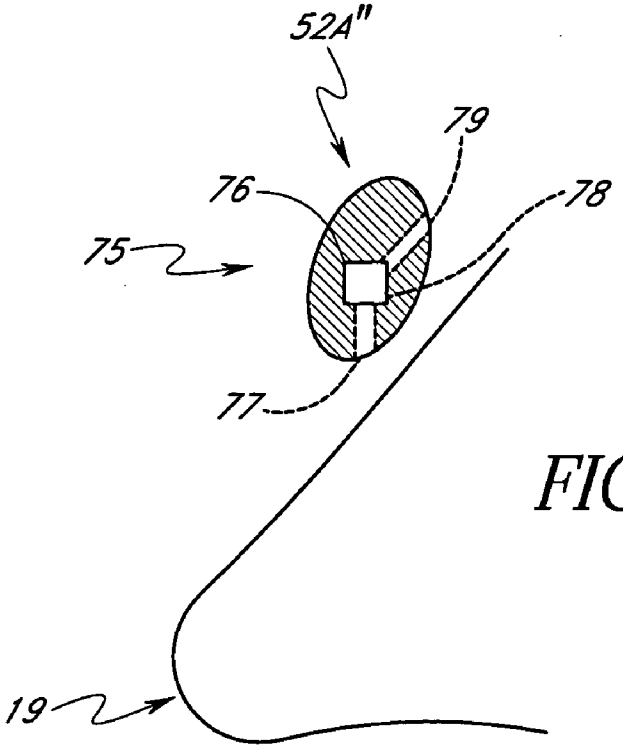

FIG. 5A

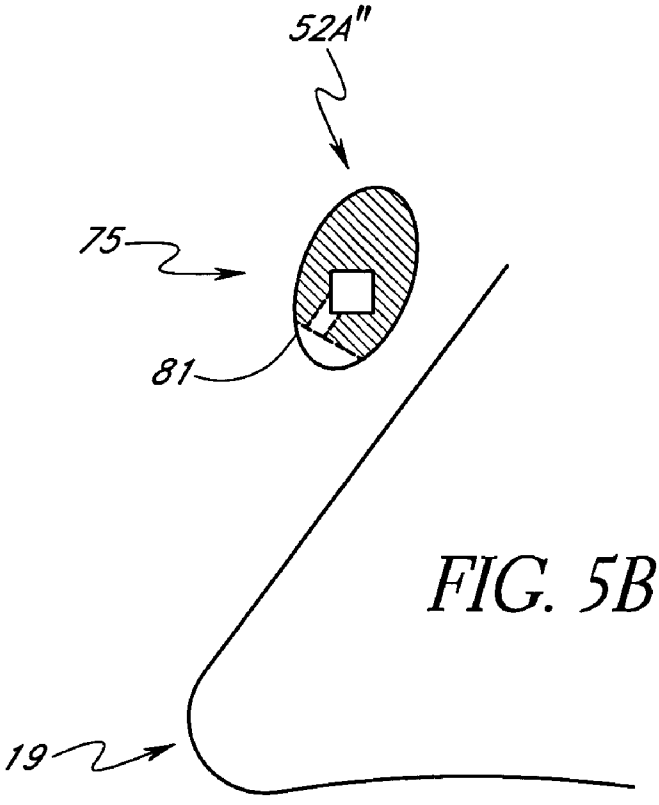

FIG. 5B

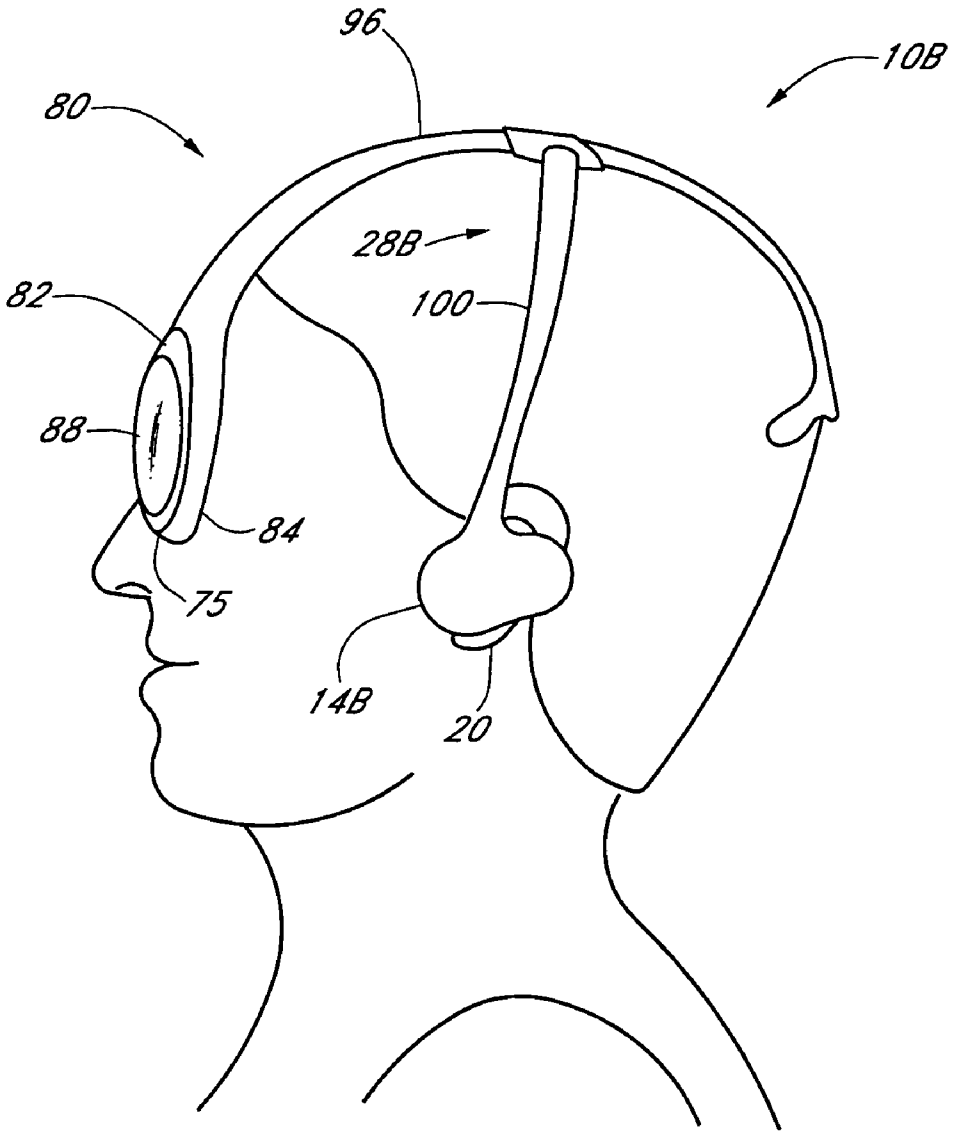

FIG. 6

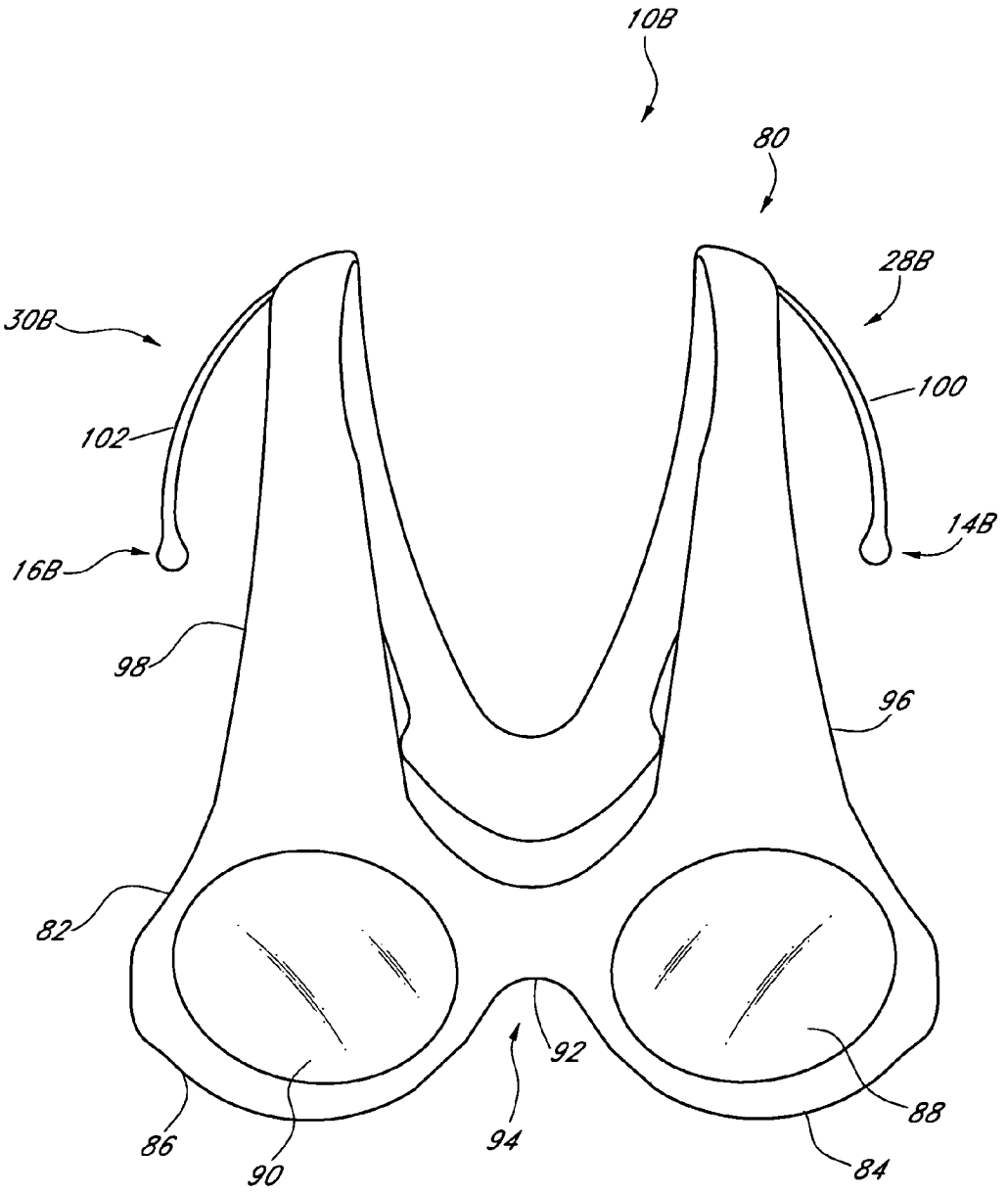

FIG. 7

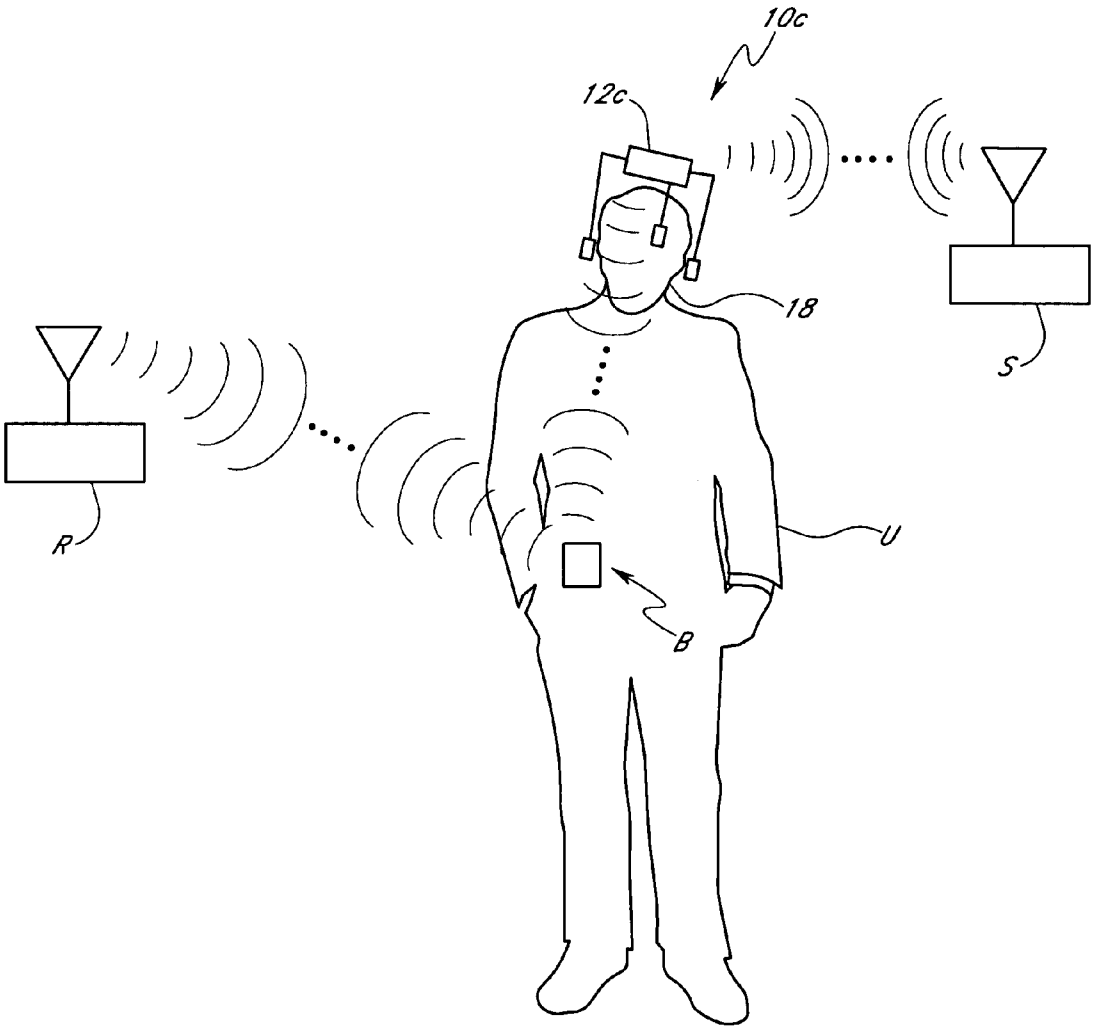

FIG. 8

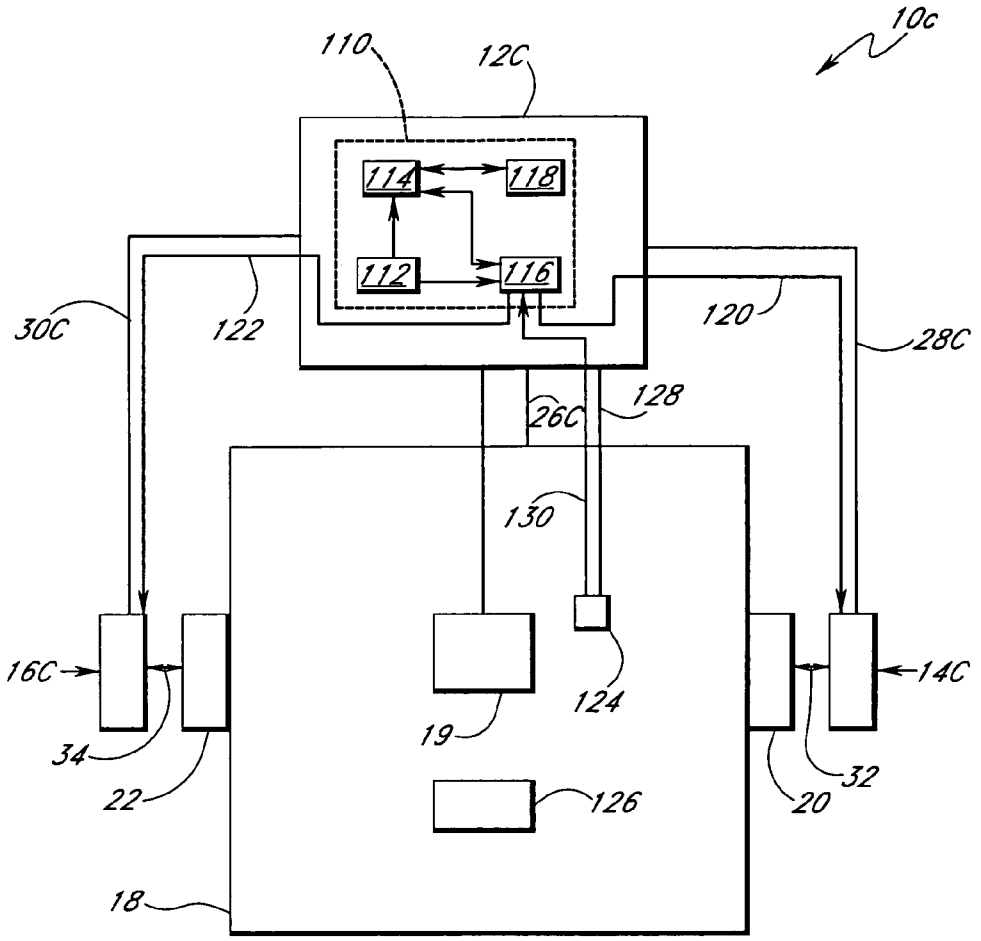
10c
110
12C
114
118
112
116
30C
122
120
28C
26C
128
130
16C
14C
124
19
34
32
22
20
126
18

FIG. 9A

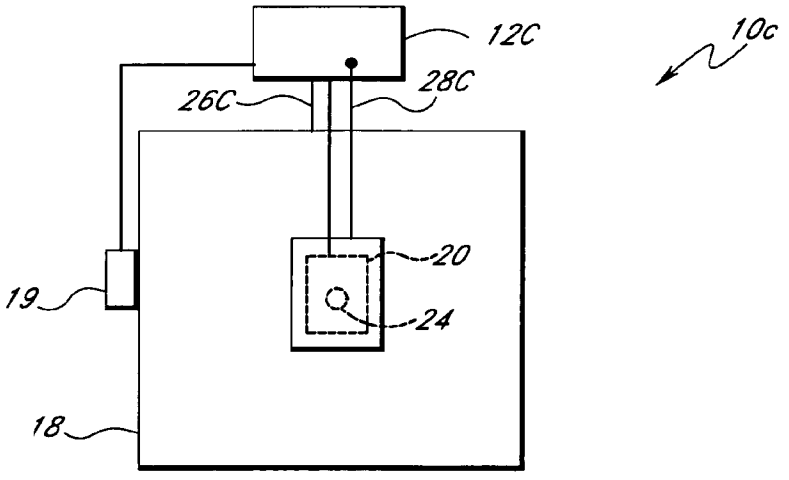
10c
12C
28C
26C
20
19
24
18

FIG. 9B

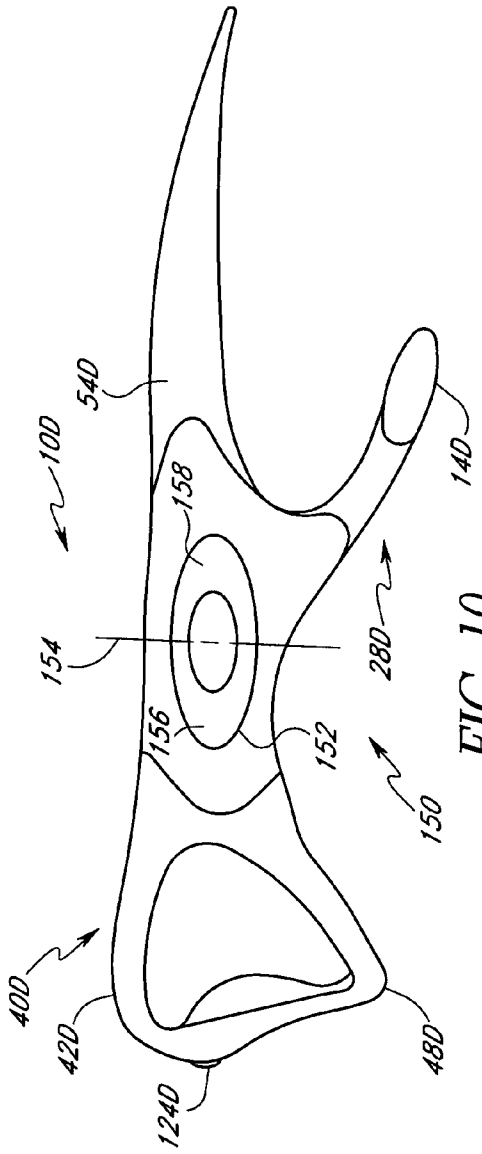
100
540
158
140
154
280
156
152
150
400
420
480
1240

FIG. 10

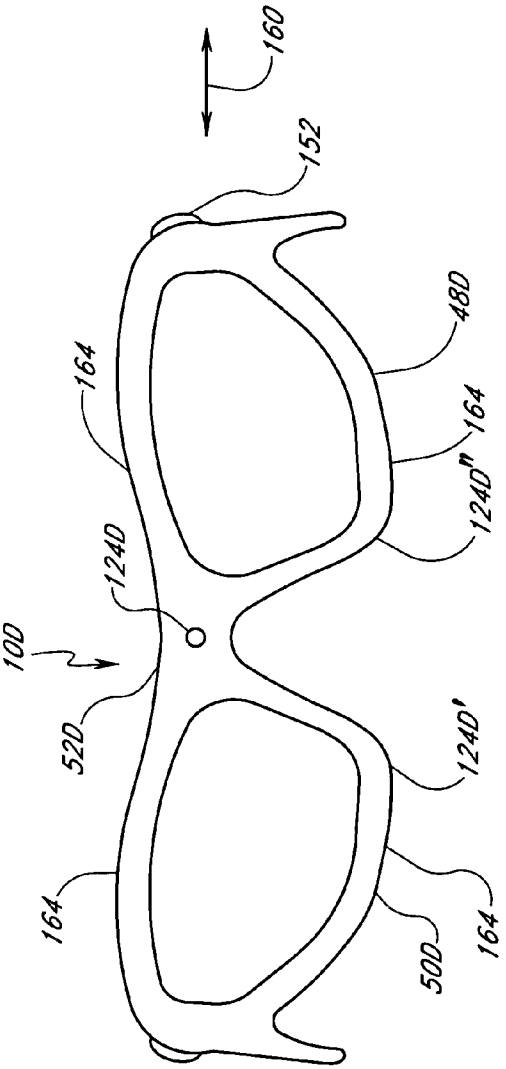
160
152
480
164
164
1240"
1240
100
520
1240'
164
164
500

FIG. 11

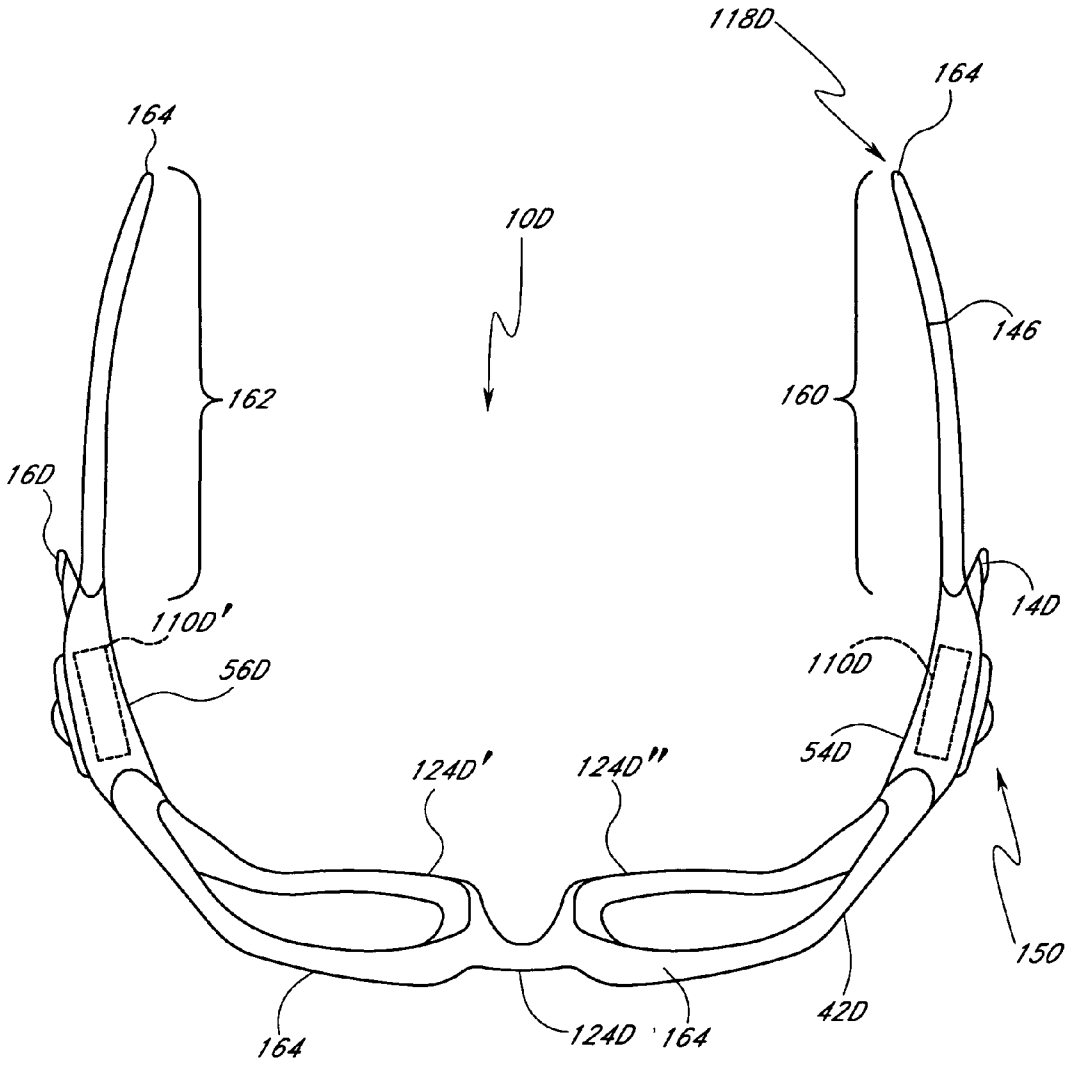
118D
164
164
10D
146
162
160
160
14D
110D'
110D
56D
54D
124D'
124D''
150
42D
164
124D
164

FIG. 12

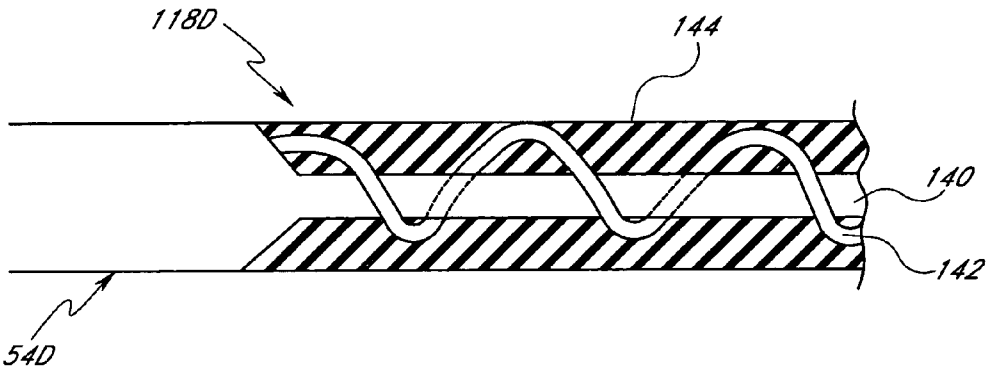

FIG. 13

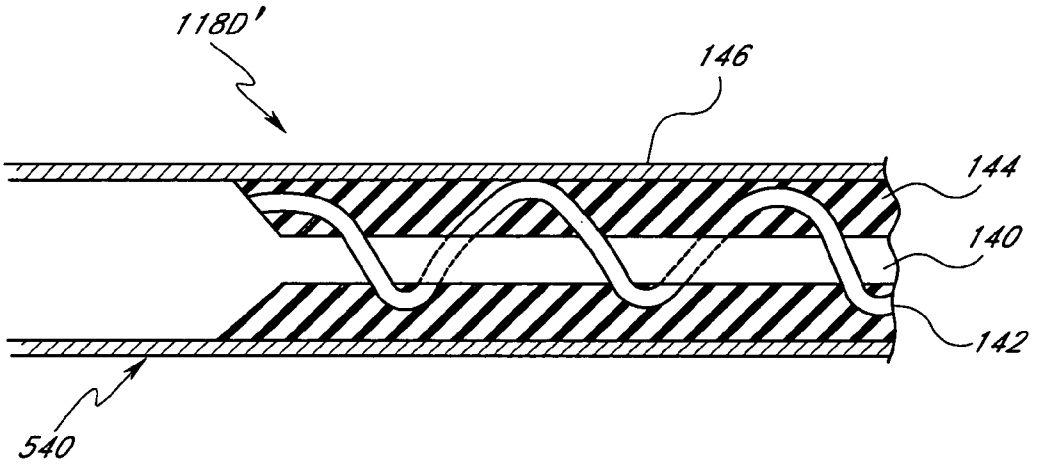

FIG. 14

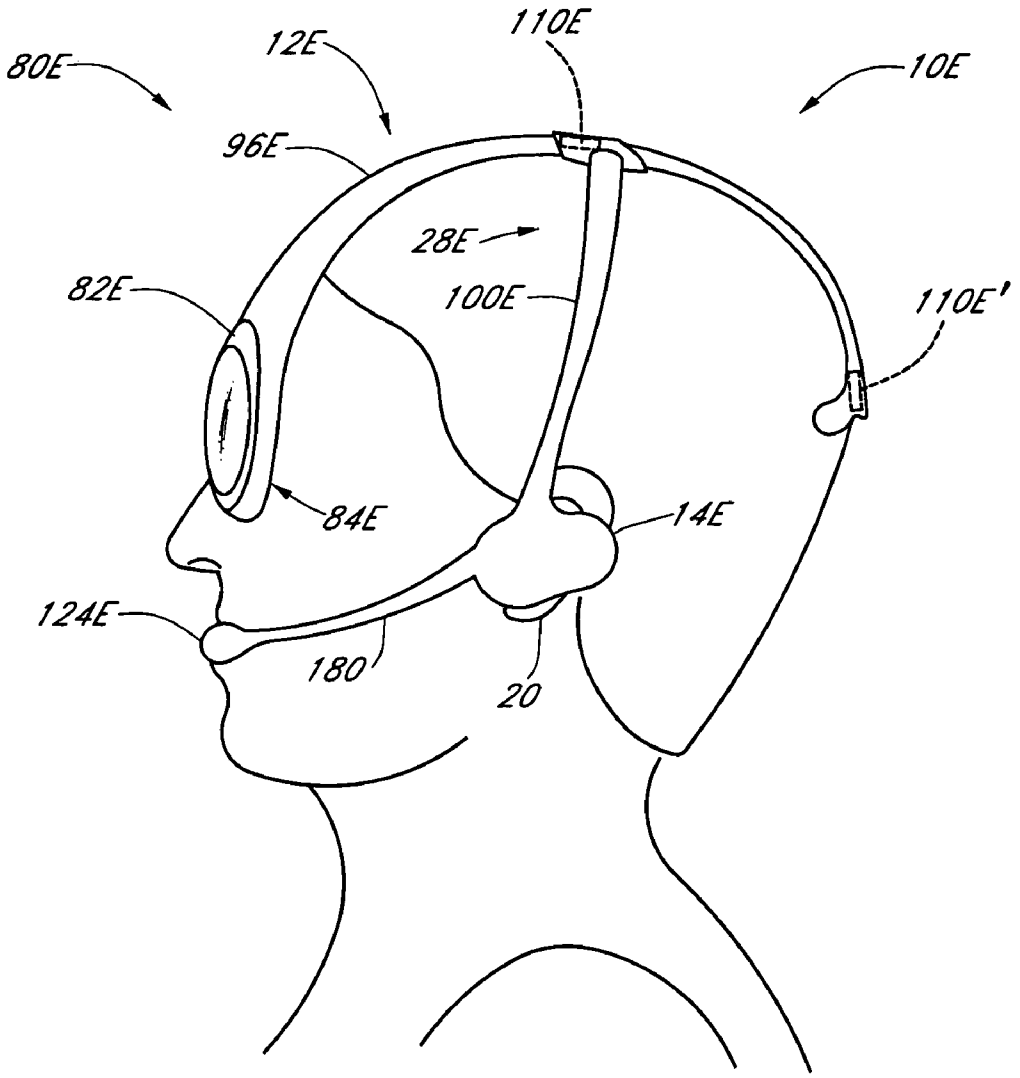

FIG. 15

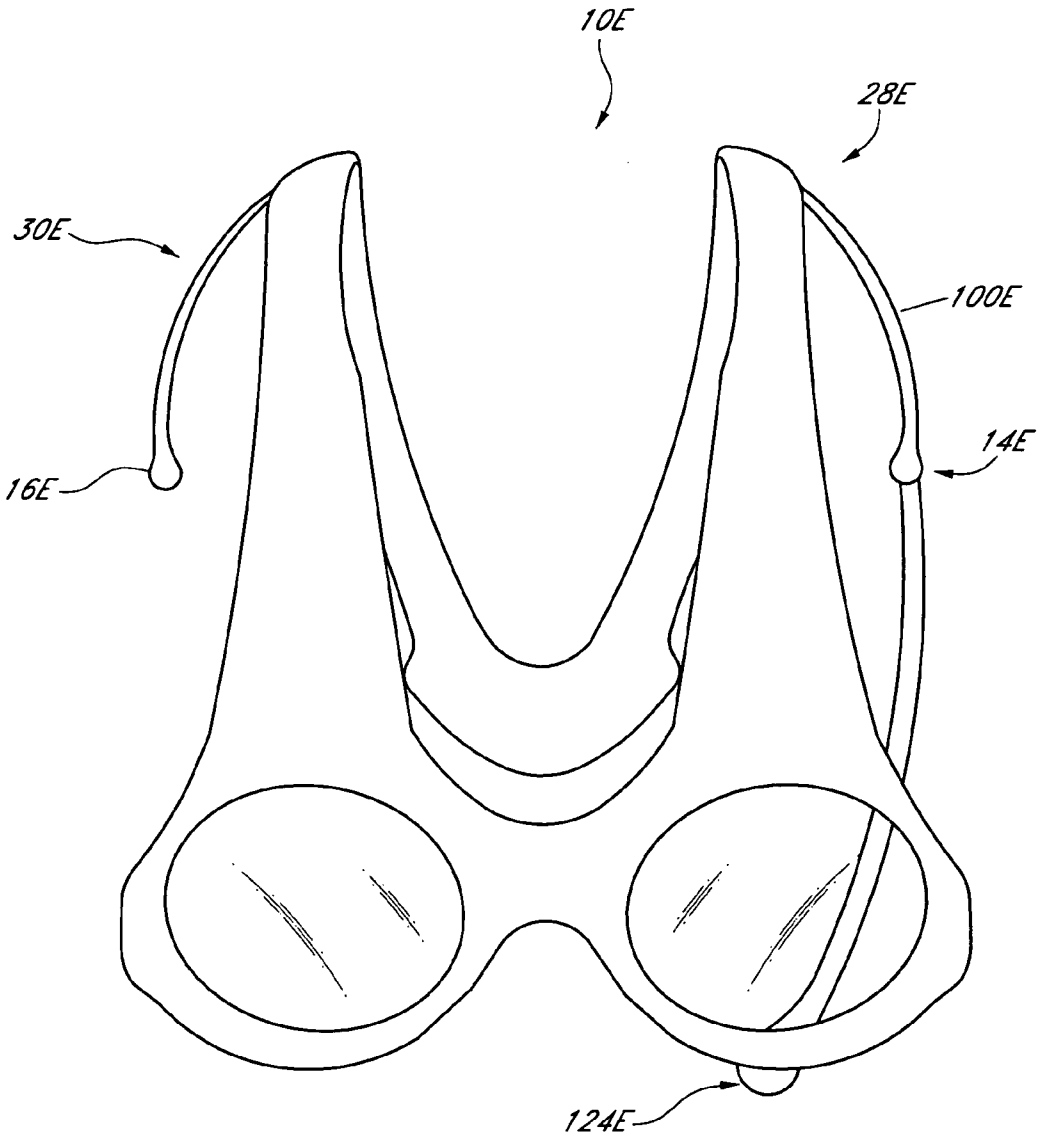

FIG. 16

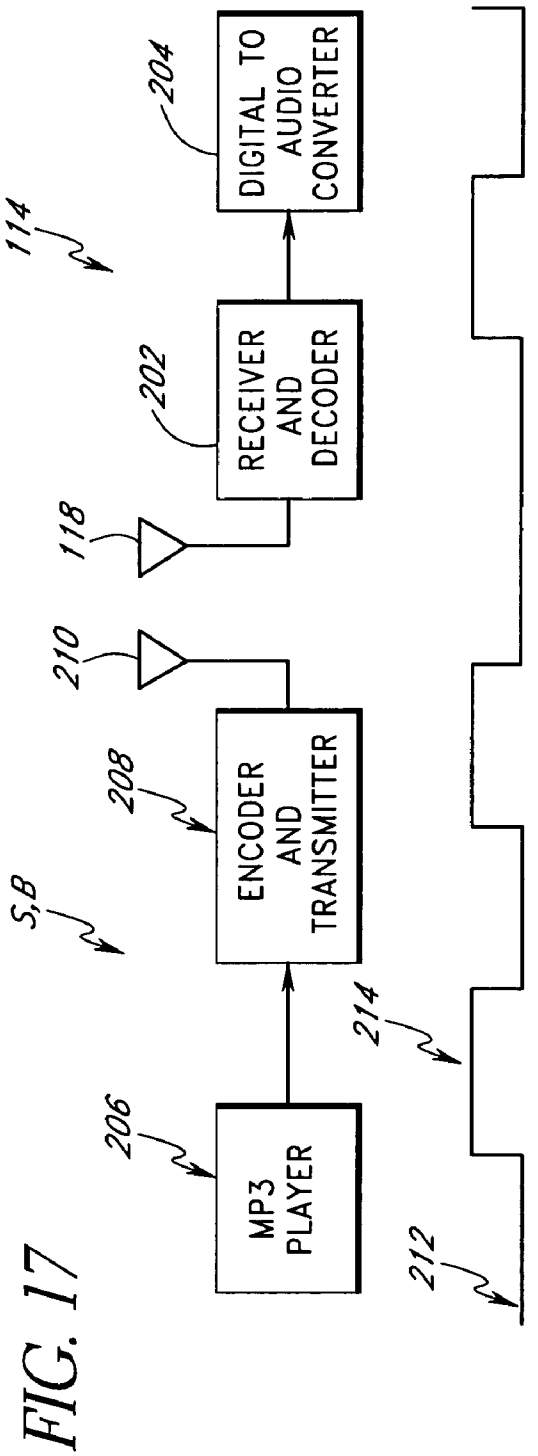
114
DIGITAL TO AUDIO CONVERTER
204
RECEIVER AND DECODER
202
118
210
ENCODER AND TRANSMITTER
208
5,8
MP3 PLAYER
206

FIG. 17

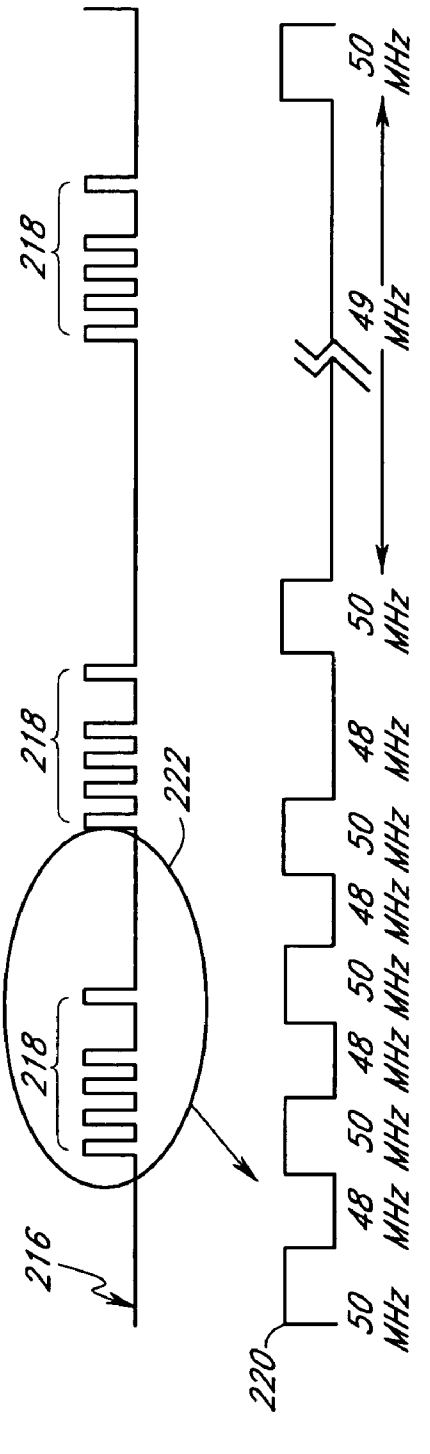
214
212
216
218
218
218
222
220
50 MHz
48 MHz
50 MHz
48 MHz
50 MHz
48 MHz
50 MHz
48 MHz
50 MHz
49 MHz
50 MHz

FIG. 18

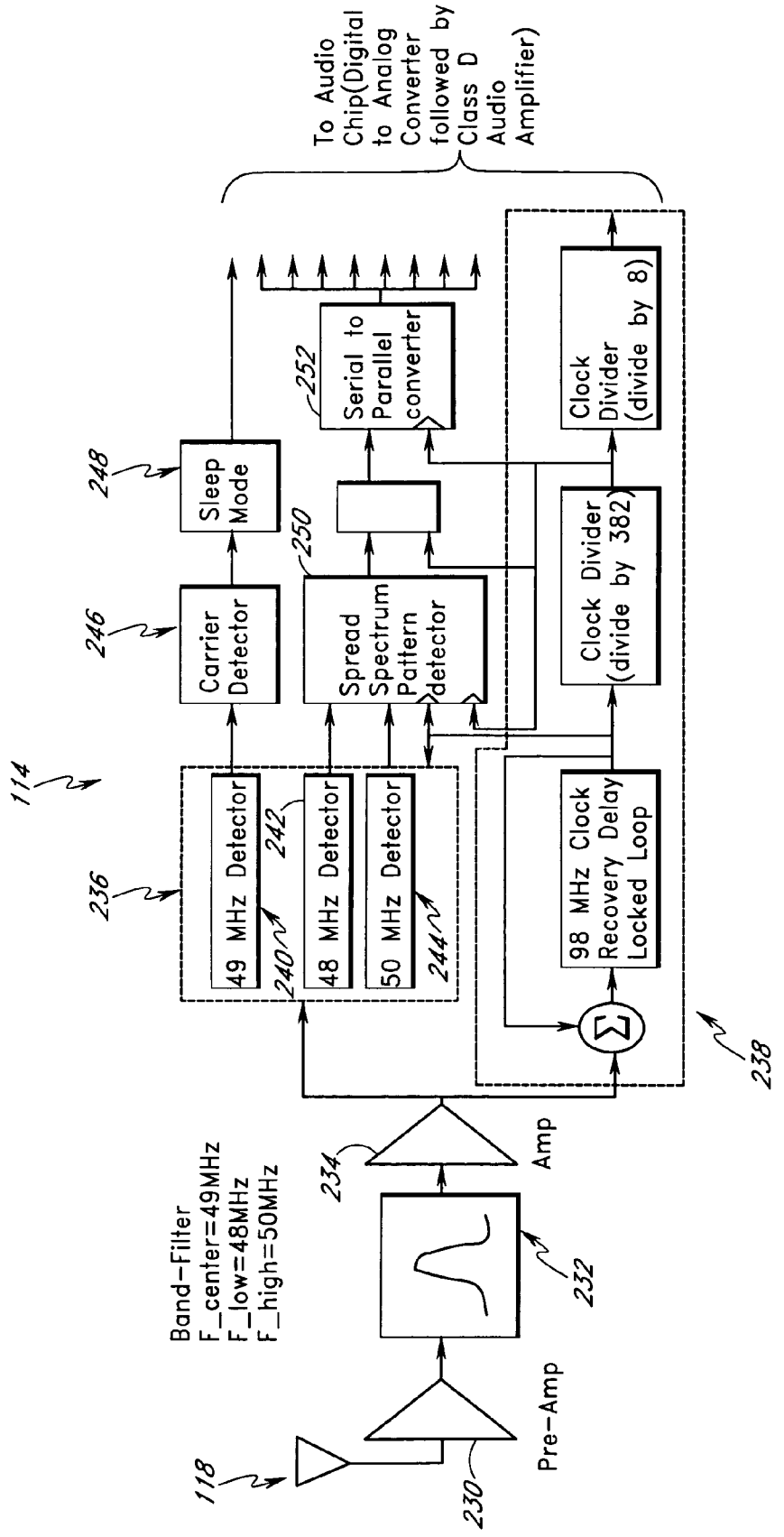
To Audio Chip(Digital to Analog Converter followed by Class D Audio Amplifier)
Serial to Parallel converter
252
Clock Divider (divide by 8)
248
Sleep Mode
250
Clock Divider (divide by 382)
246
Carrier Detector
Spread Spectrum Pattern detector
114
236
49 MHz Detector
242
48 MHz Detector
50 MHz Detector
240
244
98 MHz Clock Recovery Delay Locked Loop
238
Band-Filter
F_center=49MHz
F_low=48MHz
F_high=50MHz
234
Amp
232
Pre-Amp
118
230

FIG. 19

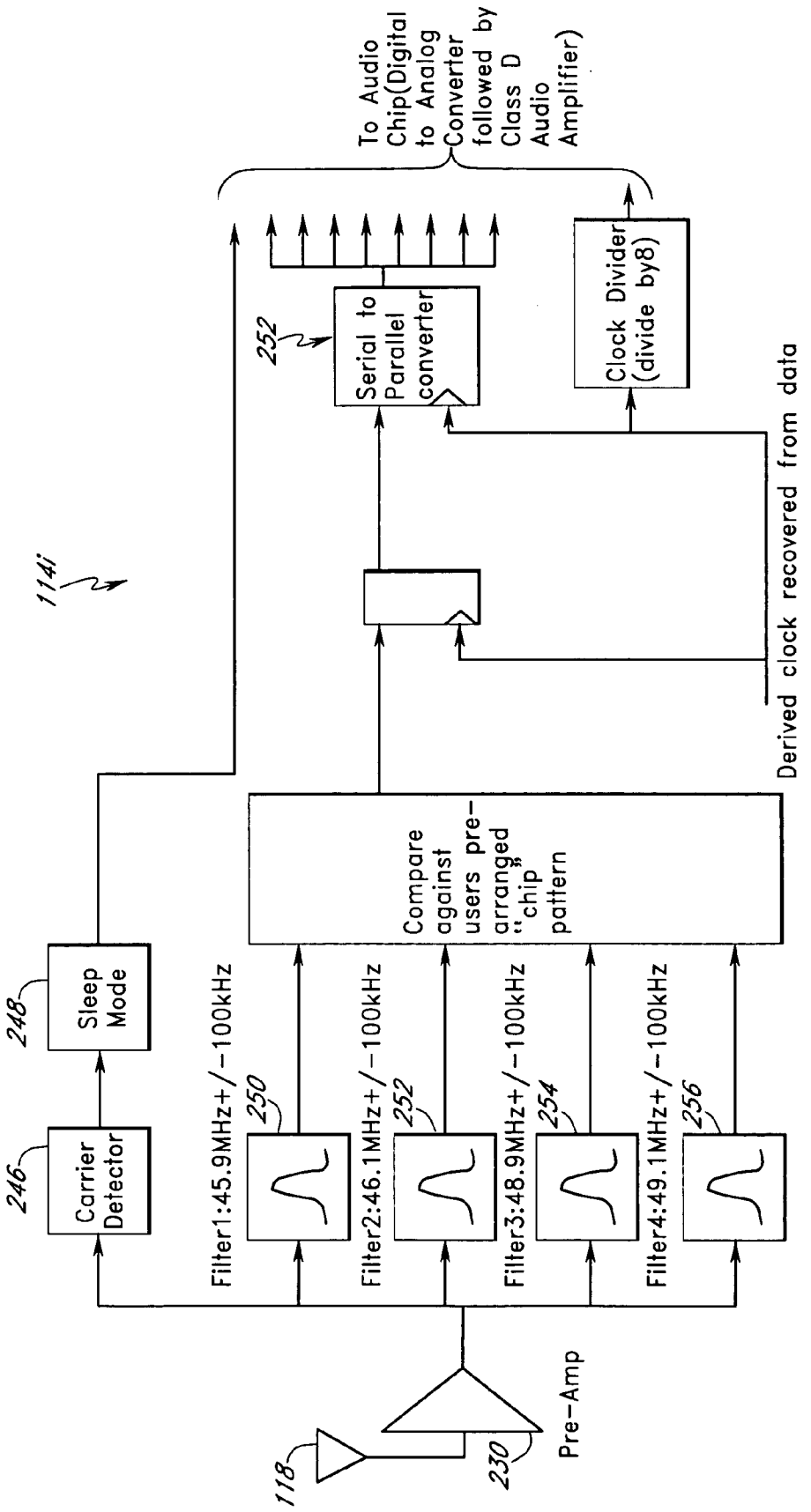
To Audio Chip(Digital to Analog Converter followed by Class D Audio Amplifier)
252
Serial to Parallel converter
Clock Divider (divide by8)
Derived clock recovered from data
114i
Compare against users pre-arranged "chip" pattern
248
Sleep Mode
246
Carrier Detector
Filter1:45.9MHz+/-100kHz
250
Filter2:46.1MHz+/-100kHz
252
Filter3:48.9MHz+/-100kHz
254
Filter4:49.1MHz+/-100kHz
256
Pre-Amp
118
230

FIG. 20

WIRELESS INTERACTIVE HEADSET

REFERENCE TO RELATED APPLICATIONS

The present application is a continuation-in-part of U.S. patent application Ser. No. 10/004,543, filed Dec. 4, 2001, pending, which is a continuation of U.S. patent application Ser. No. 09/585,593, filed Jun. 2, 2000, U.S. Pat. No. 6,325,507, and the present application claims priority benefit under 35 U.S.C. § 120 to the same. Moreover, the present application claims priority benefit under 35 U.S.C. § 119(e) from U.S. Provisional Application Nos. 60/399,317, filed Jul. 26, 2002 and 60/460,154, filed Apr. 3, 2003. The present application incorporates all of the foregoing disclosures herein by reference.

BACKGROUND OF THE INVENTION

1. Field of the Invention

The present invention is directed to wearable audio devices, and in particular, devices that humans can wear on their head and which include audio electronics such as, for example, speakers, microphones, and/or interface electronics for interacting with a wireless network.

2. Description of the Related Art

There are numerous situations in which it is convenient and preferable to mount audio output devices so that they can be worn on the head of a user. Such devices can be used for portable entertainment, personal communications, and the like. For example, these devices could be used in conjunction with cellular telephones, cordless telephones, radios, tape players, MP3 players, portable video systems, hand-held computers and laptop computers.

The audio output for many of these systems is typically directed to the wearer through the use of transducers physically positioned in or covering the ear, such as earphones and headphones. Earphones and headphones, however, are often uncomfortable to use for long periods of time.

In the cell phone industry, certain devices for remote use of a cell phone have become more popular. Certain companies have begun to widely distribute headsets for cell phones which allow a user to interact with the cell phone remotely. For example, a user can wear a headset having an earphone and a microphone connected by a flexible cable to a wireless transceiver which can be worn on the belt, for example. The transceiver communicates wirelessly with a cell phone. Thus, the user can interact with a cell phone without having the cell phone held against their head. However, with such headsets, whenever a user wants to use the cell phone, they must reattach the headphone to their ear. Further, because the headphone is supported only by one ear, it imparts an unbalanced load on the head of the user. Such an unbalanced load, when applied for a long period of time, can cause muscular pain and/or headaches.

SUMMARY OF THE INVENTION

In accordance with one embodiment of at least one of the inventions disclosed herein, a wearable wireless audio interface comprises a support. The support is configured to support at least one lens in a wearer's field of view. The support also comprises a first ear stem and an orbital. A first earphone is supported by the support, directed toward at least one of the wearer's ears, and configured to convert at least one received telecommunication signal into sound. A first electronics device is supported by the support and configured to receive the received telecommunication signal. A microphone is supported by the support and configured to convert the wearer's voice into at least one transmitted telecommunication signal. A second electronics device is supported by the support and configured to transmit the transmitted telecommunication signal.

In accordance with another embodiment of at least one of the inventions disclosed herein, an audio interface system comprises an eyeglass frame, receiver electronics supported by the eyeglass frame and configured to wirelessly receive information. The system also comprises source electronics electrically coupled with the receiver electronics and configured to wirelessly transmit information to the receiver electronics. The eyeglass frame comprises at least one earphone directed toward a wearer's ear. In one implementation, the source electronics are configured to wirelessly receive the information that the source electronics transmits to the receiver electronics. In a further implementation, the source electronics comprises a satellite. In a further implementation, the satellite comprises a source of global positioning to determine the position of the wearer. In another implementation, the source electronics comprises a source of music. In a further implementation, the source electronics comprises an MP3 player. In another implementation, the receiver electronics is configured to receive telecommunications information.

In accordance with another embodiment of at least one of the inventions disclosed herein, an eyeglass frame comprises a support for supporting at least one lens in the path of a wearer's field of view, a first ear stem attached to the support, a second ear stem attached to the support, and at least one microphone supported by at least one of the support, first ear stem, and second ear stem. The microphone is advantageously arranged to face towards the head of a wearer of the eyeglass frame. In one implementation of the invention, the support comprises a pair of orbitals that supports the at least one lens and a second lens, respectively, and a bridge connecting the orbitals. The microphone is advantageously supported by the bridge. In another implementation of the invention, a power supply is replaceably carried by the support.

In accordance with yet another embodiment of at least one of the inventions disclosed herein, an eyeglass comprises a frame configured to support a lens in the path of the wearer's field of view, a telecommunications receiver positioned inside of the frame, a telecommunications transmitter positioned inside of the frame, a first earphone carried by the first earphone support, and a microphone carried by the frame. The frame preferably comprises at least one orbital and a first earphone support. In one implementation of the invention, the eyeglass further comprises a digital storage device. In a further implementation, the digital storage device comprises an MP3 storage device. In one implementation, the eyeglass further comprises a power supply carried by the frame. In one implementation, the power supply is advantageously rechargeable. In one implementation, the power supply is replaceably carried by the frame. In another implementation, the frame further comprises a second earphone and a second earphone support. The second earphone is preferably carried by the second earphone support. In one implementation, the first earphone support extends rearwardly from the front of the eyeglass and second earphone support extends rearwardly from the front of the eyeglass. In one implementation, the first earphone support extends down from the frame and second earphone support extends down from the frame.

An aspect of at least one of the inventions disclosed herein includes the realization that where interactive electronics,

such as audio and/or video devices, are incorporated into eyeglasses, it is more important that a user can comfortably and continuously wear such eyeglasses as compared to non-interactive eyeglasses. For example, eyeglasses that have interactive devices, such as, for example, but without limitation, telephonic, video, computers, etc, will have a retail price that is substantially greater than that of non-interactive eyeglasses. Additionally, an advantage of such eyeglasses is that the user can remain highly mobile while utilizing the interactive devices in the eyeglasses. For example, a user could drive an automobile while talking to another person through telephonic devices carried by the eyeglasses. Of course, the user can encounter different lighting conditions when deriving, including bright and low-light conditions. Thus, the eyeglasses are more useful if they can be used in a variety of environments, i.e., different light levels.

In accordance with another embodiment of at least one invention disclosed herein, an eyeglass includes a frame, at least one interactive electronic device supported by the frame, and at least one lens configured to have variable light attenuation.

Further features and advantages of the present invention will become apparent to those of skill in the art in view of the detailed description of preferred embodiments which follows, when considered together with the attached drawings and claims.

BRIEF DESCRIPTION OF THE DRAWINGS

FIG. **1** is a schematic representation of a front elevational view of a wearable audio device supported by a human head.

FIG. **2** is a left side elevational view of the audio device illustrated in FIG. **1**.

FIG. **3**A is a front, left side, and top perspective view of a modification of the wearable audio device illustrated in FIGS. **1** and **2**.

FIG. **3**B is a top plan view of the audio device illustrated in FIG. **3**A.

FIG. **3**C is a schematic top plan view of the audio device of FIG. **3**A being worn on the head of a user.

FIG. **3**D is a front, top, and left side perspective view of another modification of the wearable audio devices illustrated in FIGS. **1**, **2** and **3**A–C.

FIG. **3**E is a rear, top and right side perspective view of the wearable audio device illustrated in FIG. **3**D.

FIG. **3**F is a right side elevational view of the wearable audio device illustrated in FIG. **3**D.

FIG. **3**G is a left side elevational view of the wearable audio device illustrated in FIG. **3**D.

FIG. **3**H is a front elevational view of the wearable audio device illustrated in FIG. **3**D.

FIG. **3**I is a top plan view of the wearable audio device illustrated in FIG. **3**D.

FIG. **3**J is a front, top, and left side perspective and exploded view of the wearable audio device illustrated in FIG. **3**D.

FIG. **3**K is an enlarged left side elevational view of one of the speakers of the audio device illustrated in FIG. **3**D.

FIG. **3**L is an enlarged front elevational view of the speaker illustrated in FIG. **3**K.

FIG. **3**M is a schematic illustration of the audio device illustrated in FIG. **3**D.

FIG. **4**A is a schematic representation of a rear and left side perspective view of a further modification of the wearable audio devices illustrated in FIGS. **1**, **2**, and **3**A–J.

FIG. **4**B is a schematic representation of a partial sectional and left side elevational view of the wearable audio device illustrated in FIG. **4**A being worn a human.

FIG. **5**A is a partial sectional and side elevational view of a modification of the wearable audio device illustrated in FIG. **4**A.

FIG. **5**B is a partial sectional and side elevational view of a modification of the wearable audio device illustrated in FIG. **5**A.

FIG. **6** is a left side elevational view of a modification of the audio device illustrated in FIGS. **3**–**5** being worn on the head of a user.

FIG. **7** is a front elevational view of the audio device illustrated in FIG. **6**.

FIG. **8** is a schematic representation of a front elevational view of a further modification of the audio device illustrated in FIGS. **1** and **2** being worn by a wearer and interacting with source electronics.

FIG. **9**A is an enlarged schematic representation of a front elevational view of the audio device illustrated in FIG. **8**.

FIG. **9**B is a schematic representation of a left side elevational view of the audio device illustrated in FIG. **9**A.

FIG. **10** is a schematic left side elevational view of a modification of the audio device illustrated in FIGS. **8** and **9**A, B.

FIG. **11** is a front elevational view of the audio device illustrated in FIG. **10**.

FIG. **12** is a top plan view of the audio device illustrated in FIG. **10**.

FIG. **13** is a schematic representation of a partial cross-sectional view of a portion of any of the audio devices illustrated in FIGS. **1**–**12**.

FIG. **14** is a schematic representation of a partial cross-sectional view of a modification of the portion illustrated in FIG. **13**.

FIG. **15** is a left side elevational view of a modification of the audio devices illustrated in FIGS. **8**–**12**.

FIG. **16** is a front elevational view of the audio device illustrated in FIG. **15**.

FIG. **17** is a schematic illustration of communication hardware which can be incorporated into any of the wearable audio device as illustrated in FIGS. **1**–**16** and the communication hardware of another device.

FIG. **18** is a schematic representation showing three output signals, the uppermost signal being the output of a source device, and the lower signals being the representation of the output of an encoder/decoder device illustrated in FIG. **17**.

FIG. **19** is a schematic illustration of the decoder illustrated in FIG. **17**.

FIG. **20** is a schematic illustration of a modification of the decoder illustrated in FIG. **19**, which can be incorporated into any of the wearable audio devices illustrated in FIGS. **1**–**16**.

DETAILED DESCRIPTION OF THE PREFERRED EMBODIMENT

With reference to FIGS. **1** and **2**, an audio device **10** includes a support **12** and left and right speakers **14**, **16**.

The audio device **12** is illustrated as being supported on the head **18** of a human. The head **18** includes a nose **19**, and left and right ears **20**, **22**. The schematic representation of human ears **20** and **22** are intended to represent the tissue forming the "pinna" of a human ear. With reference to FIG.

2, the meatus of the external auditory canal **24** is illustrated schematically as a circle (in phantom) generally at the center of the left ear **20**.

The support **12** is configured to be supported by the head **18**. Thus, the support **12** can be in the form of any known headwear. For example, but without limitation, the support **12** can be in the form of a hat, sweatband, tiara, helmet, headphones, and eyeglasses.

Advantageously, the support **12** is configured to support the speakers **14**, **16** at a position juxtaposed to the ears **20**, **22**, respectively, without applying a force against the ears **20**, **22** sufficient for anchoring the speakers **14**, **16** in place. Thus, the support **12** contacts the head **18** at a position other than the outer surface of the ears **20**, **22**. As shown in FIG. **1**, the support **12** is supported by the head **18** by a support portion **26** which contacts a portion of the head **18** other than the outer surface of the ears **20**, **22**. For example, but without limitation, the support **26** can contact the top of the head **18**, the sides of the head, top of the nose **19**, forehead, occipital lobe, etc.

The audio device **10** also includes support members **28**, **30** which extend from the support **12** to the speakers **14**, **16**, respectively. The support members **28**, **30** are provided with sufficient strength to maintain the position of the speakers **14**, **16** such that the speakers **14**, **16** are spaced from the outer surface of the ears **20**, **22**.

Optionally, the support members **28**, **30** can be made from a flexible material configured to allow the speakers **14**, **16** to be moved toward and away from the ears **20**, **22**, respectively. Alternatively, the support members **28**, **30** can be mounted relative to the support **12** with a mechanical device configured to allow the speakers **14**, **16** to be moved toward and away from the ears **20**, **22** respectively. The same mechanical device or an additional mechanical device can also optionally be configured to allow the speakers **14**, **16** and/or supports **28**, **30** to be translated forward and rearwardly relative to the support **12**. Further, such mechanical devices can be used in conjunction with the flexibility provided to the support members **28**, **30** from a flexible material noted above. As such, the user can adjust the spacing between the speakers **14**, **16** and the ears **20**, **22** to provide the desired spacing.

As noted above, the speakers **14**, **16** are spaced from the ears **20**, **22** such that the speakers **14**, **16** do not engage the outer surface of the ears **20**, **22** with sufficient force to provide an anchoring effect for the speakers **14**, **16**. Thus, the speakers **14**, **16** can make contact with the ears **20**, **22**, at a pressure less than that sufficient to cause discomfort to the user.

Comfort of the user is further enhanced if the support **12** is configured to maintain gaps **32**, **34** between the speakers **14**, **16** and the ears **20**, **22**, respectively. As such, the chance of irritation to the user's ears **20**, **22** is eliminated. Preferably, the gaps **32**, **34** are within the range from about 2 mm to about 3 cm. The gaps **32**, **34** can be measured from the inner surface of the speakers **14**, **16** and the outer surface of the tragus (small projection along the front edge of a human ear which partially overlies the meatus of the external auditory canal **24**) (FIG. **2**).

Such a spacing can allow the support **12** to be removed and replaced onto the head **18** of the user without rubbing against the ears **20**, **22**. This makes the audio device **10** more convenient to use.

A modification of the audio device **10** is illustrated in FIG. **3**A, and referred to generally by the reference numeral **10**A. Components of the audio device **10**A that are the same as the audio device **10** have been given the same reference numeral, except that a letter "A" has been added thereto.

In the illustrated embodiment of the audio device **10**A, the support **12**A is in the form of an eyeglass **40**. The eyeglass **40** comprises a frame **42** which supports left and right lenses **44**, **46**. Although the present audio device **10**A will be described with reference to a dual lens eyeglass, it is to be understood that the methods and principles discussed herein are readily applicable to the production of frames for unitary lens eyeglass systems and protective goggle systems as well. Further, the lenses **44**, **46** can be completely omitted. Optionally, at least one of the lenses **44**, **46** can be in the form of a view finder or a video display unit configured to be viewable by a wearer of the support **12**A.

Preferably, the lenses **44**, **46** are configured to provide variable light attenuation. For example, each of the lenses **44**, **46** can comprise a pair of stacked polarized lenses, with one of the pair being rotatable relative to the other. For example, each lens of the stacked pairs can comprise an iodine stained polarizing element. By rotating one lens relative to the other, the alignment of the polar directions of the lenses changes, thereby changing the amount of light that can pass through the pair. U.S. Pat. No. 2,237,567 discloses iodine stained polarizers and is hereby expressly incorporated herein by reference. Additionally, rotatable lens designs are disclosed in U.S. Pat. No. 4,149,780, which is hereby expressly incorporated herein by reference.

Alternatively, the lenses **44**, **46**, can comprise photochromic compositions that darken in bright light and fade in lower light environments. Such compositions can include, for example, but without limitation, silver, copper, and cadmium halides. Photochromic compounds for lenses are disclosed in U.S. Pat. Nos. 6,312,811, 5,658,502, 4,537,612, each of which are hereby expressly incorporated by reference.

More preferably, the lenses **44**, **46** comprise a dichroic dye guest-host device configured to provide variable light attenuation. For example, the lenses **44**, **46** can comprise spaced substrates coated with a conducting layer, an alignment layer, and preferably a passivation layer. Disposed between the substrates is a guest-host solution which comprises a host material and a light-absorbing dichroic dye guest. A power circuit (not shown) can be supported by the frame **42**. The power circuit is provided with a power supply connected to the conducting layers. Adjustment of the power supply alters the orientation of the host material which in turn alters the orientation of the dichroic dye. Light is absorbed by the dichroic dye, depending upon its orientation, and thus provides variable light attenuation. Such a dichroic dye guest-host device is disclosed in U.S. Pat. No. 6,239,778, which is hereby expressly incorporated by reference.

The frame **42** also comprises left and right orbitals **48**, **50** for supporting the left and right lenses **44**, **46**, respectively. Although the present inventions will be described in the context of a pair of orbitals **48**, **50** which surround the respective lenses **44**, **46**, the principles of the present inventions also apply to eyeglass systems in which the frame only partially surrounds the lens or lenses, or contacts only one edge or a portion of one edge of the lens or each lens as well. In the illustrated embodiment, the orbitals **48**, **50** are connected by a bridge portion **52**.

The eyeglass **40** is also provided with a pair of generally rearwardly extending ear stems **54**, **56** configured to retain the eyeglass **40** on the head of a wearer. In addition, an open region **58** is configured to receive the nose of the wearer, as is understood in the art. The open region **58** may optionally

be provided with a nose piece, either connected to the lens orbitals **48**, **50**, or the bridge **52**, or directly to the lenses, depending on the particular embodiment. Alternatively, the nose piece may be formed by appropriately sculpting the medial edges of the orbitals **48**, **50** and the lower edge of the bridge **52**, as in the illustrated embodiment.

The frame **42** and the ear stems **54**, **56** can be made from any appropriate material, including polymers and metals. Preferably, the frame **42** and the ear stems **54**, **56** are manufactured from a polymer. The orbitals **48**, **50** can be separately formed and assembled later with a separately manufactured bridge **52**, or the orbitals **48**, **50** and bridge **52** can be integrally molded or cast. When a metal material is used, casting the eyeglass components directly into the final configuration desirably eliminates the need to bend metal parts.

The ear stems **54**, **56** are pivotally connected to the frame **42** with hinges **60**, **62**. Additionally, the ear stems **54**, **56** preferably include padded portions **64**, **66**, respectively. The padded portions preferably comprise a foam, rubber, or other soft material for enhancing comfort for a wearer. The padded portions **64**, **66** preferably are positioned such that when the audio device **10**A is worn by a wearer, the padded portions **64**, **66** lie between the side of the user's head and the superior crux and/or upper portion of the helix of the wearer's ears.

In the illustrated embodiment, the support members **28**A, **30**A are in the form of support arms **68**, **70** extending downwardly from the ear stems **54**, **56**, respectively. As such, the speakers **14**A, **16**A can be precisely positioned relative to the ears **20**, **22** (FIG. **1**) of a wearer's head **18**. In particular, because the eyeglass **40** is generally supported at three positions, the alignment of the speakers **14**A, **16**A with the ears **20**, **22** can be reliably repeated. In particular, the eyeglass **40** is supported at the left ear stem in the vicinity of the left ear **20**, at the bridge **52** by a portion of the user's head in the vicinity of the nose **19**, and at the right ear stem **56** by a portion of the user's head **18** in the vicinity of the ear **22**.

Optionally, the support arms **68**, **70** can be flexible. Thus, users can adjust the spacing **32**, **34** between the speakers **14**A, **16**A and the ears **20**, **22**, respectively. Once a wearer adjusts the spacing of the speakers **14**A, **16**A from the ears **20**, **22**, respectively, the spacing will be preserved each time the wearer puts on or removes the eyeglass **40**.

Further, the support arms **68**, **70** can be attached to the ear stems **54**, **56**, respectively, with mechanical devices (not shown) configured to allow the support arms **68**, **70** to be adjustable. For example, such a mechanical device can allow the support arms **68**, **70** to be pivoted, rotated, and/or translated so as to adjust a spacing between the speakers **14**A, **16**A and the ears **20**, **22**. The same mechanical devices or other mechanical devices can be configured to allow the support arm **68**, **70** to be pivoted, rotated, and/or translated to adjust a forward to rearward alignment of the speakers **14**A, **16**A and the ears **20**, **22**, respectively. Such mechanical devices are described in greater detail below with reference to FIGS. **3**D–J.

With the configuration shown in FIG. **3**A, the audio device **10**A maintains the speakers **14**A, **16**A in a juxtaposed position relative to the ears **20**, **22**, respectively, and spaced therefrom. Thus, the user is not likely to experience discomfort from wearing and using the audio device **10**A.

Preferably, the support arms **68**, **70** are raked rearwardly along the ear stems **54**, **56**, respectively. As such, the support arms **68**, **70** better cooperate with the shape of the human ear. For example, the helix and the lobe of the human ear are generally raised and extend outwardly from the side of a human head. The helix extends generally from an upper forward portion of the ear, along the top edge of the ear, then downwardly along a rearward edge of the ear, terminating at the lobe. However, the tragus is nearly flush with the side of the human head. Thus, by arranging the support arm **68**, **70** in a rearwardly raked orientation, the support arms **68**, **70** are less likely to make contact with any portion of the ear. Particularly, the support arms **68**, **70** can be positioned so as to be lower than the upper portion of the helix, above the lobe, and preferably overlie the tragus.

Alternatively, the support arm **68**, **70** can be attached to the ear stems **54**, **56**, respectively, at a position rearward from the meatus of the ears **20**, **22** when the eyeglass **40** is worn by a user. As such, the support arms **68**, **70** preferably are raked forwardly so as to extend around the helix and position the speakers **14**A, **16**A over the tragus. This construction provides a further advantage in that if a user rotates the eyeglass **40** such that the lenses **44**, **46** are moved upwardly out of the field of view of the wearer, the speakers **14**A, **16**A can be more easily maintained in alignment with the ears **20**, **22** of the wearer.

Preferably, the support arm **68**, **70** are raked rearwardly so as to form angles **72**, **74** relative to the ear stems **54**, **56**. The angles **72**, **74** can be between 0 and 90 degrees. Preferably, the angles **72**, **74** are between 10 and 70 degrees. More preferably, the angles **72**, **74** are between 20 and 50 degrees. The angles **72**, **74** can be between about 35 and 45 degrees. In the illustrated embodiment, the angles **72**, **74** are about 40 degrees.

Optionally, the support arm **68**, **70** can be curved. In this configuration, the angles **72**, **74** can be measured between the ear stems **54**, **56** and a line extending from the point at which the support arm **68**, **70** connect to the ear stems **54**, **56** and the speakers **14**A, **16**A.

The audio device **10**A can be used as an audio output device for any type of device which provides an audio output signal. The audio device **10**A can include an audio input terminal disposed anywhere on the eyeglass **40** for receiving a digital or analog audio signal. Preferably, wires connecting the input jack (not shown) with the speakers **14**A, **16**A extend through the interior of the ear stems **54**, **56** so as to preserve the outer appearance of the eyeglass **40**. Alternatively, the audio device **10**A can include a wireless transceiver for receiving digital signals from another device.

With reference to FIGS. **3**D–**3**J, a modification of the audio devices **10**, **10**A is illustrated therein and referred to generally by the reference numeral **10**A'. The audio device **10**A' can include the same components as the audio devices **10**, **10**A except as noted below. Components of the audio device **10**A' that are similar to the corresponding components of the audio devices **10**, **10**A are identified with the same reference numerals except, that a "" has been added thereto.

The audio device **10**A' is in the form of an eyeglass **12**A' having a frame **40**A'. The audio device **10**A' also includes a device for the storage and playback of a sound recording.

As noted above, an aspect of at least one of the inventions disclosed herein includes a realization that the forward to rearward spacing of the bridge of a human nose to the auditory canal of the ear falls into a relatively narrow range of distances for large portions of the population. For example, the forward-to-rearward spacing from the bridge of the nose to the auditory canal is normally between about 4 ⅞ inches to about 5 ⅛ inches, and often between about 4

¾ inches and about 5 ¼ inches. Corresponding anterior-posterior plane adjustability of the speakers is preferably provided.

Thus, with reference to FIG. **3**F, the audio device **10**A' is configured such that the supports **68'**, **78'**, can translate, along a forward to rearward direction, over a range identified generally by the reference numeral Rt. Preferably, the range Rt is at least about ⅛ of one inch. Further, the range Rt can be at least about ¼ of one inch. Further, the range Rt can be in the range of from about 0.25 inches to about 1.5 inches, and, in one construction, is about 0.75 of one inch. As such, a substantial percentage of the human population will be able to align a Center of the speakers **14**A', **16**A' with their auditory canal.

With reference to FIG. **3**G, a further advantage is provided where the diameter Ds of the speakers **14**A', **16**A' is greater than about 0.5 inches, such as about 1 inch or greater. As such, an effective range Re (FIG. **3**F) over which the speakers **14**A', **16**A' can reach, is significantly enhanced with respect to the above-noted nose bridge to auditory canal spacings for humans.

Thus, the connection between the supports **68'**, **70'** to the ear stems **54'**, **56'**, respectively, can be configured to allow a limited translational range of movement of Rt yet provide a larger range of coverage Re.

Preferably, the connection between the support **68'**, **70'** and the ear stems **54'**, **56'**, is configured such that the translational position of the speakers **14**A', **16**A' is maintained when a user removes the audio device **10**A' from their head. For example, the connection between the supports **68'**, **70'**, and the ear stems **54'**, **56'** can generate sufficient friction so as to resist movement due to the weight of the supports **68'**, **70'** and the speakers **14**A', **16**A'. Alternatively, the connection or an adjustment device can include locks, clips, or other structures to prevent unwanted translational movement of the speakers **14**A', **16**A'. As such, a further advantage is provided in that a user can repeatedly remove and replace the audio device **10**A' without having to readjust the translational position of the speakers **14**A', **16**A'.

Another advantage is provided where the supports **68'**, **70'** are made from a material that is substantially rigid, at least at room temperature. For example, with reference to FIG. **3**F, the angles **72'**, **74'** defined between the supports **68'**, **70'** and the ear stems **54'**, **56'**, respectively, can be maintained at a predetermined value while the speakers **14**A', **16**A' can be moved over the range Rt. Thus, as noted above with reference to FIG. **3**A and the description of the angles **72**, **74**, the angles **72'**, **74'** can be maintained at a desired angle as a user moves the speakers **14**A', **16**A' over the range Rt.

Optionally, the supports **68'**, **70'** can be made from a material that can be deformed at room temperature. However, more preferably the material is sufficiently rigid such that substantial pressure is required to change the angle **74'**. Alternatively, the supports **68'**, **70'** can be made from a thermally sensitive material that can be softened with the application of heat. Thus, a wearer of the audio device **10**A' can heat the supports **68'**, **70'** and adjust the angle **74'** to optimize comfort for the particular wearer. Such thermal sensitive materials are widely used in the eyewear industry and thus a further description of such materials is not deemed necessary for one of ordinary skill in the art to make and use the inventions disclosed herein.

Preferably, the angles **72'**, **74'** are sized such that the spacing Vs between the center C of the speakers **14**A', **16**A' and a lower surface of the ear stems **54'**, **56'** is within the range of about 0.75 of an inch to about 1.25 inches. One aspect of at least one of the inventions disclosed herein includes the realization that there is little variation in the spacing for adult humans between the center of the auditory canal and the connecting tissue between the pinna of the ear and the skin on the side of the head. In particular, it has been found that in virtually all humans, the distance between the upper most connection of the ear and the head to the center of the auditory canal is between 0.75 of an inch and 1.25 inches. Thus, by sizing the angles **72'**, **74'** such the spacing Vs is between about 0.75 of an inch and 1.25 inches, the audio device **10**A can be worn by virtually any adult human and has sufficient alignment between the wearer's auditory canal and the center C of the speakers **14**A', **16**A'. Further, where the diameter Ds of the speakers **14**A', **16**A' is about 1 inch, almost any human can wear the audio device **10**A' without having to adjust the angles **72'**, **74'**. In other words, the auditory canal of virtually any human would be aligned with a portion of the speakers **14**A', **16**A' although the wearer's auditory canal might not be precisely aligned with the center C of the speakers **14**A', **16**A'.

With reference to FIG. **3**H, the supports **68'**, **70'** are configured to allow the speakers **14**A', **16**A', respectively, to pivot toward and away from an ear of a user. For example, as shown in FIG. **3**H, the supports **68'**, **70'** are connected to the ear stems **54'**, **56'**, respectively, so as to be pivotable about a pivot axis P. As such, the speakers **14**A', **16**A' can be pivoted or swung about the pivot axis P.

The range of motion provided by the connection between the supports **68'**, **70'** and the ear stems **54'**, **56'** is identified by the angle S in FIG. **3**H. In FIG. **3**H, the speaker **14**A' is illustrated in an intermediate position in the range of motion provided by the connection between the support **68'** and the ear stem **54'**.

The illustration of the speaker **16**A' includes a solid line representation showing a maximum outward position of the speaker **16**A'. Additionally, FIG. **3**H includes a phantom illustration of the speaker **16**A' in a maximum inward position. The angle S illustrates a range of motion between a maximum outward position (solid line) and a maximum inward position (phantom line) of the speaker **16**A'.

Preferably, the range of motion S is sufficiently large to allow any human wearer of the audio device **10**A' to position the speakers **14**A', **16**A' such that sound emitted from the speakers **14**A', **16**A' is clearly audible yet comfortable for the wearer of the audio device **10**A'. For example, human ears vary in the precise shape and size of the outwardly facing features. As such, one wearer of the audio device **10**A' may have outer facing features of their ear that project further than another wearer of the audio device **10**A'. Thus, one wearer may prefer the speakers **14**A', **16**A' to be positioned more inwardly than another wearer.

Further, some wearers of the audio device **10**A' may prefer to press the speakers **14**A', **16**A' into contact with the outer surfaces of their ears. For example, some users may desire to experience to loudest possible volume from the speakers **14**A', **16**A'. Thus, by pressing the speakers **14**A', **16**A' against their ears, the perceived volume of the sound emitted from the speakers **14**A', **16**A' will be the greatest.

Alternatively, other users may prefer to have the speakers spaced from the outer surfaces of their ear so as to prevent contact with the ear, yet maintain a close spacing to preserve the perceived volume of the sound emitted from the speakers **14**A', **16**A'. Additionally, a user may occasionally wish to move the speakers **14**A', **16**A' further away from their ears, so as to allow the wearer better hear other ambient sounds when the speakers **14**A', **16**A' are not operating. For example, a wearer of the audio device **10**A' might wish to use a cellular phone while wearing the audio device **10**A'.

Thus, the wearer can pivot one of the speakers **14**A', **16**A' to a maximum outward position (e.g., the solid line illustration of speaker **16**A' in FIG. **3**H) to allow a speaker of the cell phone to be inserted in the space between the speaker **16**A' and the ear of the wearer. As such, the wearer can continue to wear the audio device **10**A' and use another audio device, such as a cell phone. This provides a further advantage in that, because the audio device **10**A' is in the form of eyeglasses **12**A', which may include prescription lenses or tinted lenses, the wearer of the audio device **10**A' can continue to receive the benefits of such tinted or prescription lenses while using the other audio device.

An additional advantage is provided where the pivotal movement of the supports **68'**, **70'** is isolated from the translational movement thereof. For example, the connection between the supports **68'**, **70'** and the ear stems **54'**, **56'** can be configured so as to allow a user to pivot the supports **68'**, **70'** without substantially translating the supports **68'**, **70'** forwardly or rearwardly. In one embodiment, the connections can be configured to provide more perceived frictional resistance against translational movement than the frictional resistance against pivotal movement about the pivot axis P (FIG. **3**H). Thus, a user can easily pivot the speakers **14**A', **16**A' toward and away from their ears without translating the speakers **14**A', **16**A'. Thus, the procedure for moving the speakers **14**A', **16**A' toward and away from a wearer's ears can be performed more easily and, advantageously, with one hand.

The range of motion S is generally no greater than about 180°, and often less than about 90°. In one preferred embodiment, the range of motion S is no more than about 30° or 40°. The connection between the support **68'**, **70'** and the ear stems **54'**, **56'**, respectively, is generally configured to provide a sufficient holding force for maintaining a rotational orientation of the speakers **14**A', **16**A' about the pivot axis P. For example, the connection between the supports **68'**, **70'** and the ear stems **54'**, **56'**, respectively, can be configured to generate sufficient friction to resist the forces generated by normal movements of a wearer's head.

A further advantage is achieved where sufficient friction is generated to prevent the pivotal movement of the speakers **14**A', **16**A' when the audio device **10**A' is removed from the wearer and placed on a surface such that the speakers **14**A', **16**A' support at least some of the weight of the audio device **10**A'. For example, when a wearer of the audio device **10**A' removes the audio device **10**A' and places it on a table with the speakers **14**A', **16**A' facing downwardly, the speakers **14**A', **16**A' would support at least some of the weight of the audio device **10**A'. Thus, by providing sufficient friction in the connection between the supports **68'**, **70'** and the ear stems **54'**, **56'**, respectively, the position of the speakers **14**A', **16**A' can be maintained. Thus, when the wearer replaces the audio device **10**A', the speakers **14**A', **16**A' will be in the same position, thereby avoiding the need for the wearer to reposition speakers **14**A', **16**A'.

As noted above, an aspect of one of the inventions disclosed herein includes the realization that where an electronic device that is worn in the same manner as a pair of eyeglasses includes a user operable switch for controlling a function of the electronics, the comfort of the wearer of the audio device can be enhanced where the switches are operable without transferring a substantial load to the head of the wearer. For example, where the electronic device includes buttons for controlling an aspect of the device, a further advantage is provided where a support surface is provided opposite the button such that a user can apply a balancing force to the actuation force applied to the button, thereby preventing a substantial force from being transferred to the head of the wearer.

With reference to FIG. **31**, the audio device **10**A' can include at least one button **73***a*. In the illustrated embodiment, the audio device **10**A' includes five buttons; a first button **73***a* and a second button **73***b* mounted to the left ear stem **54'**, and a third button **73***c*, a fourth button **73***d*, and a fifth button **73***e* mounted to the right ear stem **56'**. Of course, this is one preferred embodiment of the arrangement of the buttons **73***a*, **73***b*, **73***c*, **73***d*, **73***e*. Other numbers of buttons and other arrangements of buttons are also applicable.

As shown in FIG. **3**H, the button **73***a* is mounted on an upwardly facing surface of the ear stem **54'**. Additionally, the ear stem **54'** has a lower surface that faces in a generally opposite direction to the direction towards which the upper surface of the ear stem **54'** faces. Thus, as shown in FIG. **3**H, the user can use a finger **71** to actuate the button **73***a* and a thumb **69** to counteract the actuation force of the finger **71** by pressing on the lower surface of the ear stem **54'**. As such, the wearer or user of the audio device **10**A' can actuate the button **73***a* without imparting a substantial load to the wearer of the audio device **10**A'.

This provides a further advantage in that a repeated application of a force against the audio device **10**A' that is transferred to the head of the wearer of the audio device **10**A' is avoided. For example, where the audio **10**A' is in the form of eyeglasses **12**A', a wearer of the eyeglasses **12**A' can be subjected to irritations if the wearer repeatedly presses the eyeglasses **12**A' to actuate a switch. Further, such repeated loads can cause headaches. Thus, by configuring the ear stems **54**A' such that the button **73***a* can be depressed without transferring a substantial load to the wearer of the ear glasses **12**A', such irritations and headaches can be avoided.

Further, by disposing the button **73***a* on an upper portion of the ear stems **54**A', and by providing the ear stems **54**A' with an opposite lower surface that faces an opposite direction relative to the upper surface, a wearer can grasp the ear stems **54**A' from the side, as illustrated in FIG. **38**, thereby allowing the user to counteract the actuation force required to actuate the button **73***a* without having to insert a finger between a side of the wearer's head and ear stems **54**A'.

FIG. **3**J illustrates an exemplary embodiment of the audio device **10**A. As shown in FIG. **3**J, the left side ear stem **54**A' defines an electronic housing portion **250** which defines an internal cavity **252** configured to receive electronic components. The electronics housing **250** includes an upper surface **254** and lower surface **256**. The upper surface **254** extends generally outwardly from the ear stems **54**A' and around the internal cavity **252**. The upper surface also includes apertures **256**, **258** through which the button **73***a*, **73***b*, respectively, extend.

The housing **250** includes a lower surface **260**. The lower surface **260** (which may contain apertures or slots) faces in an opposite direction from the upper surface **254** of the housing **250**. Preferably, the lower surface **260** is at least about 0.5 inches, and may be 0.75 inches or more wide. As such, the lower surface **260** provides a surface which allows a wearer to easily grasp the ear stems **54**A' so as to balance an actuation force supplied to the button **73***a*, **73***b*.

A cover member **262** cooperates with the housing **250** to define the closed internal cavity **252**. In the illustrated embodiment, the internal cavity **252** includes at least one compartment configured to receive an electronic circuit board **264** which includes at least one switch for each of the buttons **73***a*, **73***b*. In an exemplary but non-limiting embodi-

ment, the board **264** can include two switches, one for each of the buttons **73***a*, **73***b*, which are configured to control a volume output from the speakers **14**A', **16**A'. The cover **262** can be attached to the ear stems **54**A' with any type of fastener, such as, for example, but without limitation, screws, rivets, bolts, adhesive, and the like.

In the illustrated embodiment, the housing **250** also defines a hinge recess **262**. Additionally, the cover member **262** includes a complimentary hinge recess **268**. The recesses **266**, **268** are sized to receive a hinge pin **270**. In the illustrated embodiment, the hinge pin **270** is hollow and includes an aperture therethrough. The ends of the hinge pin **270** are configured to be engaged with corresponding portions of the frame **42'** so as to anchor the position of the hinge pin **270** relative to the frame **42'**. When the cover **262** is attached to the housing **250**, with the hinge pin **270** disposed in the recesses **266**, **268**, the ear stem **54**A' is pivotally mounted to the frame **42'**. The aperture extending through the hinge pin **270** provides a passage through which electrical conduits can pass, described in greater detail below.

The housing **250** also includes a power source recess (not shown). The power source recess includes an opening **272** sized to receive a power storage device **274**. In the illustrated embodiment, the power storage device **274** is in the form of an AAAA-sized battery. Of course, the power storage device **274** can be in the form of any type or any size of battery and can have any shape. However, a further advantage is provided where a standard-sized battery such as an AAAA battery is used. For example, as described in greater detail below, this size battery can be conveniently balanced with other electronic components configured for playback of a sound recording.

A door **276** is configured to close the opening **272**. In the illustrated embodiment, the door **276** is preferably hingedly connected to a housing **250** so as to allow the door to be rotated between an open position and a closed position. FIGS. **3**D–**3**I illustrate the door **276** in a closed position.

The ear stem **56'** includes a housing **280** defining an internal cavity **282** configured to receive at least one electronic component. The housing **280** also includes upper and lower surfaces (unnumbered) that can be configured identically or similarly to the upper and lower surfaces **254**, **260** of the housing **250**. However, in the illustrated embodiment, the upper surface of the housing **280** includes 3 apertures configured to receive portions of the buttons **73***c*, **73***d*, **73***e*. Thus, a further description of the housing **280** is not necessary for one of ordinary skill in the art to make and use the inventions disclosed herein.

The internal cavity **282**, in the illustrated embodiment, is configured to receive a printed circuit board **284**. In the illustrated embodiment, the printed circuit board **284** includes one switch for each of the buttons **73***c*, **73***d*, and **73***e*. Additionally, the printed circuit board **284** includes an audio file storage and playback device **286**.

The device **286** can be configured to store and playback any type of electronic audio and/or video file. In the illustrated embodiment, the device **286** includes a memory, an amplifier, and a processor. The memory, amplifier, and the processor are configured to operate together to function as an audio storage and playback system. For example, the audio storage and playback system can be configured to store MP3 files in a memory and to play back the MP3 files through the speakers **14**A', **16**A'. Suitable electronics for enabling and amplifying MP3 storage and playback are well known in the art, and may be commercially available from Sigmatel, Inc. or Atmel, Inc. Thus, further description of the hardware and software for operating the device **286** as a storage and playback device is not necessary for one of ordinary skill in the art to make and use the inventions disclosed herein.

Advantageously, the printed circuit board **284** also includes or is in electrical communication with a data transfer port **388**. In the illustrated embodiment, the housing **280** includes an aperture (not shown) disposed in a position similar to the position of the aperture **272** on the housing **250**. In the housing **280**, however, the aperture is aligned with the data transfer port **288**. Thus, when the printed circuit board **284** is received in the internal cavity **282**, the data transfer port **288** is aligned with the aperture.

A door **290** is configured to open and close the aperture through which the data port **288** is exposed. Preferably, the door **290** is hingedly engaged to the housing **280**, in an identical or similar manner as the door **276**. In the illustrated embodiment, the door **290** can be pivoted relative to housing **280**, thereby exposing the data transfer port **288**. In the illustrated embodiment, the data transfer port is configured to operate according to the universal serial bus (USB) transfer protocol. Optical data ports may alternatively be used. As a further alternative, MP3 files may be uploaded from a source using wireless systems, such as BLUETOOTH® protocols, as is discussed below. Further, the device **286** is configured to receive audio files from another computer, through the data transfer port **288** and to store the files into the memory incorporated into the device **286**.

A cover **292** is configured to close the internal cavity **282**. The cover **292** can be configured in accordance with the description of the cover **262**. Similarly to the housing **250** and cover **262**, the housing **280** and cover **292** include recesses **294**, **296** configured to receive a hinge pin **298**. The hinge pin **298** can be constructed identically or similarly to the hinge pin **270**. Thus, with the hinge pin **298** engaged with a frame **42'**, the cover member **292** can be attached to the housing **280** with the hinge pin **298** received within the recesses **294**, **296**. As such, the ear stem **56**A' can be pivoted relative to the frame **42'**.

With continued reference to FIG. **3**J, the speakers **14**A', **16**A' can be constructed in a similar manner, as a mirror image of each other. Each of the speakers **14**A', **16**A', include a housing member **300**. Each housing member **300** includes a transducer housing **302**, a support stem **304**, and a guide portion **306**.

The transducer housing portion **302** includes an internal recess **308** (identified in the illustration of speaker **16**A'). The transducer recess **308** can be sized to receive any type of acoustic transducer. For example, but without limitation, the transducer recess **308** can be configured to receive a standard acoustic speaker commonly used for headphones. In a non-limiting embodiment, the speaker transducer (not shown) has an outer diameter of at least about **0.6** inches. However, this is merely exemplary, and other sizes of transducers can be used.

With reference to the illustration of the speaker **14**A', the support stem **304** connects the transducer housing **302** with the guide portion **306**. The support stem **304** includes an aperture therethrough (not shown) which connects the transducer recess **308** with the guide portion **306**.

The guide portion **306** includes an aperture **310** which communicates with the aperture extending through the support stem **304**. Thus, an electric conduit, described in greater detail below, can extend through the aperture **310**, through the stem **304**, and then to the transducer recess **308**.

The guide portion **306** also includes a guide aperture **312**. The guide aperture **312** is configured to receive a guide pin **314**.

The guide pin **314** can be made from any material. In the illustrated embodiment, the guide pin **314** is a rod having an outer diameter of about 0.0625 of an inch. When assembled, the guide pin **314** is disposed within an open recess (not shown) disposed on an under surface of the housing **250**. The aperture **312** is sized so as to slidably receive the pin **314**. Thus, the guide portion **306** can translate relative to the pin **314** as well as rotate relative to the pin **314**. The size of the aperture **312** can be configured to provide a slip fit with sufficient friction to provide the stable positions noted above with reference to FIGS. **3**D–**3**I.

In this embodiment, the guide pin **314** and the aperture **312** provide both translational and pivotal movement. Additionally, the guide pin **314** and the aperture **312** can be configured to resistance to both translational movement and pivotal movement, with the resistance to translational movement being greater. For example, the axial length and diameter of the aperture **312**, controls the maximum contact area between the guide pin **314** and the guide portion **306** and thus affects the frictional force generated therebetween. Thus, the length and diameter of the aperture **312** can be adjusted to achieve the desired frictional forces.

Additionally, with reference to FIG. **3**K, when a translational force X is applied to the speaker **14**A', a torque T is created, which results in reaction forces Xr urging the guide portion **306** against the guide pin **314** at the forward and rearward ends thereof. These reaction forces Xr increase the frictional resistance against the translational movement of the speaker **14**A'. However, as shown in FIG. **3**L, when a pivot force Θ is applied to the speaker **14**A', such reaction forces are not created, and the speaker **14**A' can pivot about the guide pin **314** with seemingly less force applied as compared to the force X required to move the speaker **14**A' in a direction parallel to the guide pin **314**.

With reference again to FIG. **3**J, the recess on the lower surface of the housings **250**, **280**, are sized so as to allow the guide portion **306** to slide in a forward to rearward direction in the range Rt, described above with reference to FIG. **3**F. Additionally, the open recess on the lower surface of the housings **250**, **280** is provided with a width to limit the range of motion S of the speakers **14**A', **16**A', described above with reference to FIG. **3**H.

With reference to FIG. **3**E, the frame **42'** includes an interior electrical conduit channel **316** configured to receive an electrical conduit for connecting the speakers **14'**, **16'**, the printed circuit boards **264**, **284**, and the power storage device **274**. For example, with reference to FIG. **3**M, the buttons **73***a*, **73***b*, are connected to the device **286** through conduits **73***ai*, **73***bi*. The storage device **274** is connected to the device **286** through a power line **274***i*. Additionally, the speaker **14**A' is connected to the device **286** with an audio output conduit **14**Ai'.

As illustrated in FIG. **3**M, portions of the conduits **73***ai*, **73***bi*, **274***i* and **14**Ai', extend through the channel **316**. In an exemplary embodiment, the conduits **73***ai*, **73***bi*, **274***i*, and **14**Ai', can be in the form of a ribbon connector **318** extending through the channel **316**. Thus, with reference to FIGS. **3**J and **3**M, the ribbon connector **318** can extend from the housing **280**, into the recesses **294**, **296**, through an aperture (not shown) in the hinge pin **298** to the upper opening within the hinge pin **298**, then through the channel **316** (FIG. **3**E), to an upper opening of the hinge pin **270**, out through an aperture (not shown) through a side of a hinge pin **270**, through the recesses **266**, **268** of the housing **250**, and then to the speaker **14**A', printed circuit board **264**, and the power storage device **274**.

The conduit **14**Ai' can extend to the aperture **310** in the guide portion **306**, through a central aperture of the support stem **304**, and into the transducer recess **308**, as to connect to a transducer disposed therein. Optionally, the portion of the conduit **14**Ai' that extends out of the housing **250** and into the transducer housing **300** can be formed from an insulated metal conduit, or any other known conduit. The speaker **16**A' can be connected to the printed circuit board **284** in a similar manner.

The buttons **73***c*, **73***d*, **73***e* and the data transfer port **288** are connected to the device **286** through printed conduits incorporated into the printed circuit board **284**.

As noted above, one aspect of at least one of the inventions disclosed herein includes the realization that a desirable balance can be achieved by disposing a power storage device in one ear stem of an eyeglass and play-back device into the second ear stem. Thus, as illustrated in FIGS. **3**J and **3**K, the power storage device **274** is disposed in the left ear stem **54'** and the storage and play-back device **286** is disposed in the right ear stem **56'**.

In the illustrated embodiment, the buttons **73***a* and **73***b* for controlling the volume of the sound output from the speakers **14**A', **16**A'. For example, the button **73***a* can be used for increasing volume and the button **73***b* can be used for decreasing volume. Alternatively, the button **73***b* can be for increasing volume and the button **73***a* can be for decreasing volume. When a wearer of the audio device **10**A' presses one of the buttons **73***a*, **73***b*, a simple on-off signal can be transmitted to the device **286**. The device **286** can be configured to interpret the on-off signals from the buttons **73***a*, **73***b* as volume control signals and adjust the volume to the speakers **14**A', **16**A' accordingly.

Optionally, a third command can be generated by pressing both of the buttons **73***a*, **73***b* simultaneously. For example, but without limitation, the device **286** can be configured to interpret simultaneous signals from both the buttons **73***a*, **73***b*, as a signal for turning on and off an additional feature. For example, but without limitation, the additional feature can be a bass boost feature which increases the bass of the audio signal transmitted to the speakers **14**A', **16**A'. Of course, other functions can be associated with the buttons **73***a*, **73***b*.

The buttons **73***c*, **73***d*, **73***e* can be figured to operate switches to transmit control signals to the device **286** similarly to the buttons **73***a*, **73***b*. For example, but without limitation, the button **73***c* corresponds to a power button. For example, the device **286** can be configured to recognize a signal from the button **73***c* as a power on or power off request. In this embodiment, when the device **286** is off, and a signal from the button **73***c* is received, the device **286** can turn on. Additionally, the device **286**, when in an on state, can be configured to turn off when a signal from the button **73***c* is received. Optionally, the device **286** can be configured to, when in an off or standby state, turn on and begin to play an audio file when a signal from the button **73***c* is received. Additionally, the device **286** can be configured to pause when another signal from the button **73***c* is received. In this embodiment, the device **286** can be configured to turn off only if the button **73***c* is held down for a predetermined amount of time. For example, the device **286** can be configured to turn off if the button **73***c* is held down for more than two seconds or for three seconds or for other periods of time.

The buttons **73***d* and **73***e* can correspond to forward and reverse functions. For example, the button **73***d* can corre-

spond to a track skip function. In an illustrative but non-limiting example, such a track skip function can cause the device **286** to skip to a next audio file in the memory of the device **286**. Similarly, the button **73***e* can correspond to a reverse track skip function in which the device **286** skips to the previous audio file.

Optionally, the buttons **73***d*, **73***e* can be correlated to fast forward and rewind functions. For example, the device **286** can be configured to fast forward through an audio file, and play the corresponding sounds at a fast forward speed, when the button **73***d* is held down and to stop and play the normal speed when the button **73***d* is released. Similarly, the device **286** can be configured to play an audio file backwards at an elevated speed, when the button **73***e* is held down, and to resume normal forward play when the button **73***e* is released. This arrangement of the buttons **73***a*, **73***b*, **73***c*, **73***d*, **73***e* provides certain advantages noted above. However, other arrangements of the buttons **73***a*, **73***b*, **73***c*, **73***d*, **73***e* and the corresponding functions thereof can be modified.

With reference to FIGS. **4**A–**4**B, a modification of the audio devices **10**, **10**A, **10**A' is illustrated therein and referred to generally by the reference numeral **10**A". The audio device **10**A" can include the same components as the audio devices **10**, **10**A, **10**A' except as noted below. Components of the audio device **10**A" that are similar to corresponding components of the audio devices **10**, **10**A, **10**A' are identified with the same reference numerals, except that a "" has been added thereto.

The audio device **10**A" is in the form of a eyeglass **12**A" having a frame **40**A". The audio device **10**A" also includes at least one microphone **75**. Advantageously, the microphone **75** is disposed so as to face toward the wearer.

FIG. **4**B illustrates a partial cross-sectional view of the eyeglass **12**A" on the head **18** of a wearer. The microphone **75** is schematically illustrated and includes a transducer unit **76**. In the illustrated embodiment, the transducer **76** is disposed within the frame **40**A" and at least one aperture **77** extends from the transducer unit **76** to the outer surface of the frame **40**A". Alternatively, the transducer can be positioned so as to be exposed on the outer surface of the frame **40**A".

Advantageously, the aperture **77** is disposed so as to face toward the head of the user **18**. The illustrated aperture **77** faces downward and toward the head **18** of the wearer. By configuring the aperture to extend downwardly and toward the head **18**, the aperture is disposed as close as possible to the mouth of the wearer while benefiting from the wind protection provided by positioning the aperture **77** on the portion of the frame **40**A' facing toward the head **18**.

Alternatively, the aperture can be positioned so as to extend generally horizontally from the transducer **76** to an outer surface of the frame **40**A", this configuration being illustrated and identified by the numeral **78**. By configuring the aperture **78** to extending generally horizontally toward the head **18**, the aperture **78** is better protected from wind.

As another alternative, the aperture can be configured to extend upwardly from the transducer and toward the head **18**, this configuration being identified by the numeral **79**. By configuring the aperture **79** to extend upwardly from the transducer **76** and toward the head **18**, the aperture **79** is further protected from wind which can cause noise. However, in this orientation, the aperture **79** is more likely to collect water that may inadvertently splash onto the aperture **79**. Thus, the aperture configuration identified by the numeral **77** provides a further advantage in that water is less likely to enter the aperture **77**. Any water that may enter the aperture **77** will drain therefrom due to gravity.

The microphone **75** can be disposed anywhere on the frame **40**A', including the orbitals **48**A", **50**A", the bridge **52**A", or the ear stems **54**A", **56**A". Optionally, the microphone **75** can be in the form of a bone conduction microphone. As such, the microphone **75** is disposed such that the when a user wears the audio device **10**A', the microphone **75** is in contact with the user's head **18**. For example, but without limitation, the microphone can be positioned anywhere on the anywhere on the frame **40**A', including the orbitals **48**A", **50**A", the bridge **52**A", or the ear stems **54**A", **56**A" such that the microphone contacts the user's head. More preferably, the microphone **75** is positioned such that it contacts a portion of the user's head **18** near a bone, such that vibrations generated from the user's voice and traveling through the bone, are conducted to the microphone. In another alternative, the microphone **75** can be configured to be inserted into the meatus **24** (FIG. **2**) of the ear canal of the user. Thus, in this modification, the microphone **75** can be substituted for one of the speakers **14**, **16**. Alternatively, an ear-canal type bone conduction microphone can be combined with a speaker so as to provide two-way communication with the user through a single ear canal.

Further, the audio device **10**A" can include noise cancellation electronics (not shown) configured to filter wind-generated noise from an audio signal transmitted from the microphone **75**.

FIG. **5**A illustrates a modification in which the microphone **75** is disposed on the bridge **52**A". Similarly to the configuration illustrated in FIG. **4**B, the bridge **52**A" can include an aperture **77** which extends downwardly and toward the nose **19** of the wearer, horizontally extending aperture **78**, or an upwardly extending aperture **79**.

Alternatively, the microphone **75** can include a forwardly facing aperture, as illustrated in FIG. **5**B, and a wind sock **81** disposed over the aperture. The wind sock **81** can be made in any known manner. For example, the wind sock **81** can be made from a shaped piece of expanded foam. Configuring the bridge portion **52**A' as such is particularly advantageous because the bridge portion of an eyeglass is typically somewhat bulbous. A wind sock can be shaped complementarily to the bridge portion **52**A'. Thus, the sock **81** can be made so as to appear to be part of a normal bridge portion of an eyeglass.

The audio device **10**A" can include electrical conduits extending through the frame **40**A" to an audio output jack (not shown). The audio output jack can be disposed at the end of the ear stems **54**A", **56**A", or anywhere else on the frame **40**A". Thus, a user can wear the audio device **10**A' and use the microphone **75** in order to transform the voice of the wearer or other sounds into an electrical signal. The electrical signal can be transmitted to another audio device, such as a palm top computer, a laptop computer, a digital or analog audio recorder, a cell phone, and the like. Additionally, the audio device **10**A" can include speakers, such as the speakers **14**A", **16**A" illustrated in FIG. **3**A. As such, the audio device **10**A" can be configured to provide two-way audio for the wearer, i.e., audio input being transmitted to the user through the speakers **14**A", **16**A", and audio output being transmitted from the wearer, through the microphone **75**, and out through the audio output jack. As such, a user can use the audio device **10**A" for two-way audio communication in a comfortable manner.

With reference to FIGS. **6** and **7**, a modification of the audio devices **10**, **10**A, **10**A', **10**A" is illustrated therein and referred to generally by the reference numeral **10**B. Components of the audio device **10**B corresponding to compo-

nents of the audio devices **10**, **10**A, **10**A', **10**A" are identified with the same reference numerals, except that letter "C" has been added thereto.

The audio device **10**B is in the form of an eyeglass **80**. The eyeglass **80** includes a frame **82**. The frame **82** includes left and right orbitals **84**, **86**. Each of the orbitals **84**, **86** support a lens **88**, **90**. The frame **82** also includes a bridge portion **92**. Similarly to the bridge portion **52** of the audio device **10**A, the bridge portion **92** connects the orbitals **84**, **86**. Additionally, the bridge portion **92** defines an open space **94** configured to receive the nose **19** of a wearer. The inner sides of the orbitals **84**, **86** and/or the bridge portion **92** is configured to support the frames **82** on the nose of a user.

The eyeglass **80** also includes support stems **96**, **98** extending from the upper portions of the orbitals **84**, **86** toward a posterior of a wearer's head. In the illustrated embodiment, the stems **96**, **98** extend along an upper surface of the wearer's head. Thus, the stems **96**, **98**, along with the bridge portion **92**, support the eyeglass **80** on the wearer's head **18**. The support members **28**B, **30**B are comprised of support arms **100**, **102**.

With reference to FIGS. **5**, **6** and **7**, the support arms **100**, **102** extend downwardly from the stems **96**, **98**, respectively. In the illustrated embodiment, the support arms **100**, **102** extend in an "L" shape. In particular, the support arm **100** extends from the stem **96** to a point just forward from the tragus of the user's ear **20**. From this point, the support arm **100** extends rearwardly so as to support the speaker **14**B at a position juxtaposed and spaced from the ear **20**. Preferably, the speaker **14**B is maintained in a position from about 2 mm to 3 cm from the tragus of the ear **20**. Similarly to the audio device **10**A, the audio device **10**B can include an audio input through a wired arrangement or through a wireless transceiver.

With reference to FIGS. **8**, **9**A, and **9**B, another modification of the audio device **10** is illustrated therein and referred to generally by the reference numeral **10**C. Similar components of the audio device **10**C have been given the same reference numerals, except that that a "C" has been added thereto.

As illustrated in FIG. **8**, the audio device **10**C can be worn on the head **18** of a user U. Preferably, the audio device **10**C is configured to provide one or two-way wireless communication with a source device, or the source device can be incorporated into the audio device **10**C. The source device can be carried by the user U, mounted to a moveable object, stationary, or part of a local area or personal area network.

The user U can carry a "body borne" source device B such as, for example, but without limitation, a cellular phone, an MP3 player, a "two-way" radio, a palmtop computer, or a laptop computer. As such, the user U can use the audio device **10**C to receive and listen to audio signals from the source device B, and/or transmit audio signals to the source device B. Optionally, the audio device **10**C can also be configured to transmit and receive data signals to and from the source device B, described in greater detail below.

Optionally, the device B can also be configured to communicate, via long or short range wireless networking protocols, with a remote source R. The remote source R can be, for example, but without limitation, a cellular phone service provider, a satellite radio provider, or a wireless internet service provider. For example, but without limitation, the source device B can be configured to communicate with other wireless data networks such as via, for example, but without limitation, long-range packet-switched network protocols including PCS, GSM, and GPRS. As such, the audio device **10**C can be used as an audio interface for the source device B. For example, but without limitation, where the source device B is a cellular phone, the user U can listen to the audio output of the cellular phone, such as the voice of a caller, through sound transducers in the audio device **10**C. Optionally, the user U can send voice signals or commands to the cellular phone by speaking into a microphone on the audio device **10**C, described in greater detail below. Thus, the audio device **10**C may advantageously be a receiver and/or a transmitter for telecommunications.

In general, the component configuration of FIG. **8** enables the audio device **10**C to carry interface electronics with the user, such as audio output and audio input. However, the source electronics such as the MP3 player, cellular phone, computer or the like may be off board, or located remotely from the audio device **10**C. This enables the audio device **10**C to accomplish complex electronic functions, while retaining a sleek, low weight configuration. Thus, the audio device **10**C is in communication with the off board source electronics device B. The off board source device B may be located anywhere within the working range of the audio device **10**C. In many applications, the source electronics B will be carried by the wearer, such as on a belt clip, pocket, purse, backpack, integrated with "smart" clothing, or the like. This accomplishes the function of off loading the bulk and weight of the source electronics from the headset.

The source electronics B may also be located within a short range of the wearer, such as within the room or same building. For example, personnel in an office building or factory may remain in contact with each, and with the cellular telephone system, internet or the like by positioning transmitter/receiver antenna for the off board electronics B throughout the hallways or rooms of the building. In shorter range, or personal applications, the out board electronics B may be the form of a desktop unit, or other device adapted for positioning within relatively short (e.g. no greater than about 10 feet, no greater than about 20 feet, no greater than about 50 feet, no greater than 100 feet) of the user during the normal use activities.

In all of the foregoing constructions of the invention, the off board electronics B may communicate remotely with the remote source R. Source R may be the cellular telephone network, or other remote source. In this manner, the driver electronics may be off loaded from the headset, to reduce bulk, weight and power consumption characteristics. The headset may nonetheless communicate with a remote source R, by relaying the signal through the off board electronics B with or without modification.

Optionally, the audio device **10**C can be configured to provide one or two-way communication with a stationary source device S. The stationary source device can be, for example, but without limitation, a cellular phone mounted in an automobile, a computer, or a local area network.

With reference to FIGS. **9**A and **9**B, the audio device **10**C preferably comprises a wearable wireless audio interface device which includes a support **12**C supported on the head **18** of a user by the support **26**C and includes an interface device **110**. The interface device **110** includes a power source **112**, a transceiver **114**, an interface **116**, and an antenna **118**.

The power source **112** can be in the form of disposable or rechargeable batteries. Optionally, the power source **112** can be in the form of solar panels and a power regulator.

The transceiver **114** can be in the form of a digital wireless transceiver for one-way or two-way communication. For example, the transceiver **114** can be a transceiver used in known wireless networking devices that operate under the standards of 802.11a, 802.11b, or preferably, the standard

that has become known as BLUETOOTH™. As illustrated in BLUETOOTH™-related publications discussed below, the BLUETOOTH™ standard advantageously provides low-cost, low-power, and wireless links using a short-range, radio-based technology. Systems that employ the BLUETOOTH™ standard and similar systems advantageously allow creation of a short-range, wireless "personal area network" by using small radio transmitters. Consequently, with BLUETOOTH™-enabled systems and similar systems, components within these systems may communicate wirelessly via a personal area network. Personal area networks advantageously may include voice/data, may include voice over data, may include digital and analogue communication, and may provide wireless connectivity to source electronics. Personal area networks may advantageously have a range of about 30 feet; however, longer or shorter ranges are possible. The antenna **118** can be in the form of an onboard antenna integral with the transceiver **114** or an antenna external to the transceiver **114**. In another implementation, the transceiver **114** can support data speeds of up to 721 kilo-bits per second as well as three voice channels.

In one implementation, the transceiver **114** can operate at least two power levels: a lower power level that covers a range of about ten yards and a higher power level. The higher level covers a range of about one hundred yards, can function even in very noisy radio environments, and can be audible under severe conditions. The transceiver **114** can advantageously limit its output with reference to system requirements. For example, without limitation, if the source electronics B is only a short distance from audio device **10**C, the transceiver **114** modifies its signal to be suitable for the distance. In another implementation, the transceiver **114** can switch to a low-power mode when traffic volume becomes low or stops.

The interface **116** can be configured to receive signals from the transceiver **114** that are in the form of digital or analog audio signals. The interface **116** can then send the audio signals to the speakers **14**C, **16**C through speaker lines **120**, **122**, respectively, discussed in greater detail below.

Optionally, the audio device **10**C can include a microphone **124**. Preferably, the support **12**C is configured to support the microphone **124** in the vicinity of a mouth **126** of a user. As such, the support **12**C includes a support member **128** supporting the microphone **124** in the vicinity of the mouth **126**.

The microphone **124** is connected to the interface **116** through a microphone line **130**. Thus, the transceiver **114** can receive audio signals from the microphone **124** through the interface **116**. As such, the audio device **10**C can wirelessly interact with an interactive audio device, such as a cellular phone, cordless phone, or a computer which responds to voice commands. The microphone **124** can also be in any of the forms discussed above with reference to the microphone **75**.

As noted above with reference to the audio device **10** in FIGS. **1** and **2**, by configuring the support **12**C to support the speakers **14**C, **16**C in a position juxtaposed and spaced from the ears **20**, **22** of the head **18**, the audio device **10**C provides enhanced comfort for a user.

With reference to FIGS. **10**–**12**, a modification of the audio device **10**C is illustrated therein and identified generally by the reference numeral **10**D. The components of the audio device **10**D which are the same as the components in the audio devices **10**, **10**A, **10**B, and **10**C are identified with the same reference numerals, except that a letter "D" has been added.

In the audio device **10**D, the microphone **124**D can be disposed in the frame **42**D. In particular, the microphone **124**D can be disposed in the bridge portion **52**D. Alternatively, the microphone **124**D can be disposed along a lower edge of the right orbital **50**D, this position being identified by the reference numeral **124**D'. Further, the microphone could be positioned in a lower edge of the left orbital **48**D, this position being identified by the reference numeral **124**D". Optionally, two microphones can be disposed on the frame **42**D at both the positions **124**D' and **124**D". Similarly to the microphone **75**, the microphones **124**D', **124**D" preferably are positioned so as to face toward the user. Thus, the microphones **124**D', **124**D" can be protected from wind and noise. The microphones **124**D, **124**D',**124**D" can also be constructed in accordance with any of the forms of the microphone **75** discussed above with reference to FIGS. **4**A, **4**B, **5**A, **5**B.

With reference to FIG. **12**, the interface device **110**D can be disposed in one of the ear stems **54**D, **56**D. Optionally, the components of the interface device **110**D can be divided with some of the components being in the ear stem **54**D and the remaining components in the ear stem **56**D, these components being identified by the reference numeral **110**D'. Preferably, the components are distributed between the ear stems **54**D, **56**D so as to provide balance to the device **10**D. This is particularly advantageous because imbalanced headwear can cause muscle pain and/or headaches. Thus, by distributing components of the interface device **110**D between the ear stems **54**D, **56**D, the device **10**D can be better balanced.

In one arrangement, the transceiver **114**, interface **116**, and the antenna **118** can be disposed in the left ear stem **54**D with the battery **112** being disposed in the right ear stem **56**D. This arrangement is advantageous because there are numerous standard battery sizes widely available. Thus, the devices within the ear stem **54**D can be balanced with the appropriate number and size of commercially available batteries disposed in the ear stem **56**D.

In another arrangement, the lenses **44**D, **46**D can include an electronic variable light attenuation feature, such as, for example, but without limitation, a dichroic dye guest-host device. Additionally, another user operable switch (not shown) can be disposed in the ear stem **56**D. Such a user operable switch can be used to control the orientation, and thus the light attenuation provided by, the dichroic dye.

Optionally, a further power source (not shown) for the dichroic dye guest-host device can also be disposed in the ear stem **56**D. For example, the rear portion **162** of ear stem **56**D can comprise a removable battery. Such a battery can provide a power source for controlling the orientation of the dichroic dye in the lenses **44**D, **46**D. In this modification, the additional user operable switch disposed in the ear stem **56**D can be used to control the power from the battery supplied to the lenses **44**D, **46**D.

The appropriate length for the antenna **118**D is determined by the working frequency range of the transceiver **114**. Typically, an antenna can be approximately 0.25 of the wave length of the signal being transmitted and/or received. In one illustrative non-limiting embodiment, such as in the BLUETOOTH™ standard, the frequency range is from about 2.0 gigahertz to 2.43 gigahertz. For such a frequency range, an antenna can be made with a length of approximately 0.25 of the wavelength. Thus, for this frequency range, the antenna can be approximately 1 inch long.

With reference to FIG. **12**, the antenna can be formed at a terminal end of one of the ear stems **54**D, **56**D. In the

illustrated embodiment, the antenna **118**D is disposed at the terminal end of the left ear stem **54**D.

In this embodiment, approximately the last inch of the ear stem **54**D is used for the antenna **118**D. The antenna **118**D can be made of any appropriate metal. The antenna can be connected to the transceiver **114** with a direct electrical connection, an inductive connection, or a capacitive connection.

With reference to FIG. **13**, an inductive type connection is illustrated therein. As shown in FIG. **13**, the antenna **118**D comprises an inner conductive rod **140** and a coil **142** wrapped helically around the rod **140**. The coil **142** is connected to the transceiver **114** in a known manner.

The ear stems **54**D, **56**D can be made from a conductive metal material. Where metal is used, near the terminal end of the ear stem **54**D, the metal material is reduced relative to the outer surface of the stem **54**D. The coil member is wrapped around the rod **140** and an insulative material **144** is disposed over the coil **142** so as to be substantially flush with the remainder of the ear stem **54**D. Thus, the smooth outer appearance of the ear stem **54**D is maintained, without comprising the efficiency of the antenna **118**D.

With reference to FIG. **14**, a modification of the antenna **118**D is illustrated therein and identified by the reference numeral **118**D'. Components of the antenna **118**D' which were the same as the antenna **118**D illustrated in FIG. **13**, have been given the same reference numeral, except that a "'" has been added.

The antenna **118**D' and the stem **54**D includes a thin outer layer **146** of a metal material. As known in the antenna arts, it is possible to dispose a thin layer of metal over an antenna without destroying the antenna's ability to transmit and receive signals. This design is advantageous because if the device **10**D is constructed of a metal material, including metal such as, for example, without limitation, sintered titanium or magnesium, the thin outer layer **146** can be formed of this material so that the appearance of the device **10**D is uniform.

Where the stem **54**D is made from a metal material, the antennas **118**D, **118**D' illustrated in FIGS. **13** and **14** provide an additional advantage in that electrons in the ear stem **54**D can be excited by the signal applied to the coil **142**. Thus, the ear stem **54**D itself becomes part of the antenna **118**D, **118**D', and thus can provide better range and/or efficiency for the transmission and reception of signals. Furthermore, if the ear stem **54**D is electrically coupled to the frame **42**D, the frame **42**D would also become excited in phase with the excitations of the antenna **118**D, **118**D'. Thus, the ear stem **54**D and the frame **42**D would effectively become part of the antenna, thereby allowing transmission and reception from two sides of the head of the user.

Optionally, the ear stem **56**D could also be electrically coupled to the frame **42**D. Thus, the stem **56**D would also become part of the antenna **118**D, **118**D', thereby allowing transmission and reception of signals on three sides of the user's head. Thus, where at least a portion of a frame of an eyeglass is used as the antenna for the wireless transceiver **114**, the audio device benefits from enhanced antenna efficiency.

Optionally, the antenna **118**D, **118**D' can be isolated from the remainder of the stem **54**D via an insulator **146**, thereby preventing interference between the antenna and other devices on the audio device **10**D. As such, the remainder of the device **10**D can be made from any material, such as, for example, but without limitation, a polymer.

Preferably, the audio device **10**D includes a user interface device **150** configured to transmit user input signals to the interface **116** and/or the transceiver **114**. In the illustrated embodiment, the user interface device **150** is in the form of a 3-way button. The 3-way button **152** is configured to have three modes of operation. Firstly, the button **152** is mounted to pivot about a rocker axis **154**. Thus, in one mode of operation, the button **152** can be depressed inwardly on a forward end **156** of the button **152**, thereby causing the button **152** to pivot or "rock" about the pivot axis **154**. Additionally, the button **152** can be pressed at a rearward end **158**, thereby causing the button **152** to pivot about the pivot axis **154** in the opposite direction. Additionally, the button **152** can be mounted so as to be translatable in the medial-lateral direction, identified by the reference numeral **160** (FIG. **11**). Appropriate springs can be provided beneath the button **152** to bias the button in an outward protruding and balanced position. Appropriate contacts can be mounted beneath the button **152** so as to be activated individually according to the modes of operation.

In one illustrative and non-limiting embodiment, the button **152** can be used to control volume. For example, by pressing on the forward portion **156**, a contact can be made causing the transceiver **114** or the interface **116** to increase the volume of the speakers **14**D, **16**D. Additionally, by pressing on the rearward portion **158** of the button **152**, the transceiver **114** or interface **116** could lower the volume of the speakers **14**D, **16**D.

In a further illustrative and non-limiting example, the medial-lateral movement of the button **152**, along the directions identified by the arrow **160**, can be used to choose different functions performed by the transceiver **114** or the interface **116**. For example, an inward movement of the button **152** could be used to answer an incoming phone call where the audio device **10**D is used as an audio interface for a cellular phone.

Optionally, the power source **112** can comprise portions of the ear stems **54**D, **56**D which have been formed into batteries. For example, the rear portions **160**, **162** of the ear stems **54**D, **56**D, respectively, can be in the form of custom made batteries, either disposable or rechargeable. Preferably, the rear portions **160**, **162** are removable from the forward portions of the ear stems **54**D, **56**D. This provides a particular advantage in terms of balance. As noted above, imbalanced loads on the head can cause muscular pain and/or headaches. In particular, excessive pressure on the nose can cause severe headaches. Additionally, batteries can have a significantly higher mass density than plastic and lightweight metals, such as sintered titanium or magnesium. Thus, by constructing the rearward portions **160**, **162** of the ear stems **54**D, **56**D of batteries, the weight of these batteries can improve forward-rearward balance of the audio device **10**D in that the weight of the interface device **110** can be offset by the batteries. In another embodiment, the ear stems **54**D, **56**D can define a housing for removable batteries.

The audio device **10**D can also include power contacts **164** for recharging any rechargeable batteries connected thereto. For example, the power contacts **164** can be disposed on a lower edge of the orbitals **48**D, **50**D. Thus, with an appropriate recharging cradle (not shown), the audio device **10**D can be laid on the cradle, thereby making contact between the power contacts **164** and corresponding contacts in the cradle (not shown). Alternatively, power contacts can be provided in numerous other locations as desired. For example, the power contacts **164** can be disposed at the ends of the ear stems **54**D, **56**D. A corresponding cradle can include two vertically oriented holes into which the ear

stems are inserted for recharging. In this configuration, the lens within the orbitals **48**D, **50**D would face directly upwardly.

In another alternative, the power contacts **164** are disposed on the upper edges of the orbitals **48**D, **50**D. In this configuration, the audio device **10**D is laid in a cradle in an inverted position, such that the contacts **164** make electrical contact with corresponding contacts in the cradle. This position is advantageous because it prevents weight from being applied to the supports **28**D, **30**D. This prevents misalignment of the speakers **14**D, **16**D.

With reference to FIGS. **8**, **9**A, and **9**B, in another embodiment, the audio device **10**C is advantageously adapted to support any of a variety of portable electronic circuitry or devices which have previously been difficult to incorporate into conventional headsets due to bulk, weight or other considerations. For example, but without limitation, the electronics are digital or other storage devices and retrieval circuitry such as for retrieving music or other information from MP3 format memory or other memory devices. The audio device **10**C can carry any of a variety of receivers and/or transmitters, such as transceiver **114**. For example, but without limitation, the audio device **10**C can carry receivers and/or transmitters for music or for global positioning. In another example, the audio device **10**C can carry receivers and/or transmitters for telecommunications (i.e., telecommunications devices). As used herein, the term "telecommunications devices" is intended to include telephone components as well as devices for communicating with a telephone. For example, "telecommunications devices" can include one or more transceivers for transmitting an audio signal to a cellular phone to be transmitted by the cellular phone as the speaker's voice, and/or for receiving an audio signal from a cellular phone representing a caller's voice. Of course, other audio, video, or data signals can be transmitted between the audio device **10**C and such a cellular phone through such transceivers.

In other embodiments, drivers and other electronics for driving heads-up displays, such as liquid crystal displays or other miniature display technology can also be carried by the audio device **10**C. The power source **112** can be carried by the audio device **10**C. For example, without limitation, the power source **112** can advantageously be replaceable or rechargeable. Other electronics or mechanical components can additionally be carried by the audio device **10**C. In other embodiments, the audio device **10**C can also be utilized solely to support any of the foregoing or other electronics components or systems, without also supporting one or more lenses in the wearer's field of view. Thus, in any of the embodiments of the audio devices disclosed herein, the lenses and/or lens orbitals can be omitted as will be apparent to those of skill in the art in view of the disclosure herein.

In another embodiment, a further modification of the audio devices **10**, **10**A, **10**B, **10**C, and **10**D is provided wherein the audio devices include at least two banks of microphones, with one bank acting as a speaker of received and one bank providing an ambient noise-cancellation function. The microphone banks can be positioned at any suitable location or combination of locations (e.g., on the audio device, within the audio device, opposing sides of the audio device, or the like). In one embodiment, automatic switching of the speaking-microphone and noise-canceling-microphone banks' functions advantageously enhances ease of use. In a further embodiment, the microphone banks can be arranged in an array to be used in conjunction with algorithms to discern, reduce, and/or eliminate noise for the purpose of voice recognition. For example, in one embodiment, such microphone banks can include ASIC-based noise-canceling technology, such as is available in chips from Andrea Electronics Corporation (AEC), to enable voice recognition in ambient noise up to about 130 Db or more. In another embodiment, microphone banks can be arranged in any suitable combination of linear or non-linear arrays to be used in conjunction with algorithms to discern, reduce, and/or eliminate noise in any suitable manner. In another embodiment, audio/proximity sensors can advantageously trigger the appropriate functionality in a specific bank. In another embodiment, a noise-canceling microphone can be provided in connection with a cord or other microphones described above. For example, without limitation, a series of miniature microphones can be supported down a cord from the audio device, separated by desired distances, and aimed in different directions. In another implementation, one or more of the microphones can be for verbal input from the user, and one or more others of the microphones, or the same microphone, can also be for noise-cancellation purposes.

With reference to FIGS. **8**, **9**A, and **9**B, in another embodiment, the transceiver **114** is adapted to employ a wide variety of technologies, including wireless communication such as RF, IR, ultrasonic, laser or optical, as well as wired and other communications technologies. In one embodiment, a body-LAN radio is employed. Other embodiments can employ a flexible-circuit design. Many commercially available devices can be used as transceiver **114**. For example, without limitation, Texas Instruments, National Semiconductor, Motorola manufacture and develop single RF transceiver chips, which can use, for example, 0.18 micron, 1.8 V power technologies and 2.4 GHz transmission capabilities. Of course, a variety of transceiver specifications are available and usable, depending on the particular embodiment envisioned. In another implementation, other commercially available products operating at 900 MHz to 1.9 GHz or more can be used. Data rates for information transfer to wearable or other type computing devices will vary with each possible design. In a preferred implementation, a data rate is sufficient for text display. RF products, and other products, ultimately will be capable of updating a full-color display and have additional capabilities as well. Thus, heads-up displays, such as liquid crystal displays or other miniature display technology described above can be employed.

In another embodiment, a further modification of the audio devices **10**, **10**A, **10**B, **10**C, and **10**D is provided wherein the audio devices can include and/or communicate with a variety of sensors, including but not limited to motion, radar, heat, light, smoke, air-quality, oxygen, CO and distance. Medical monitoring sensors are also contemplated. Sensors can be directed inwardly toward the user's body, or outwardly away from the body (e.g., sensing the surrounding environment). Sensors in communication with the audio devices also can be strategically positioned or left behind to facilitate the communication of sensed information. For example, a firefighter entering a burning building can position sensor to communicate the smoke and heat conditions to that firefighter and to others at the sensor-drop location. Remote sensors can also be relatively fixed in position, as in the case of a maintenance worker wearing an audio device that receives various signals from sensors located in machines or other equipment for which the worker is responsible. A blind wearer of audio device can employ a distance sensor to determine distance to surrounding objects, for example, or a GPS unit for direction-finding. Other exemplary sensing capabilities are disclosed on one or

more of the following, all of which are incorporated by reference herein: U.S. Pat. No. 5,285,398 to Janik, issued Feb. 9, 1994; U.S. Pat. No. 5,491,651 to Janik, issued Feb. 13, 1996; U.S. Pat. No. 5,798,907 to Janik, issued Aug. 25, 1998; U.S. Pat. No. 5,581,492 to Janik, issued Dec. 3, 1996; U.S. Pat. No. 5,555,490 to Carroll, issued Sep. 10, 1996; and U.S. Pat. No. 5,572,401 to Carroll, issued Nov. 5, 1996.

With reference to FIGS. **15** and **16**, a further modification of the audio devices **10**, **10**A, **10**B, **10**C, and **10**D, is illustrated therein and identified generally by the reference numeral **10**E. Components that are similar or the same as the components of the audio devices **10**, **10**A, **10**B, **10**C, and **10**D, have been given the same reference numerals, except that a "E" has been added thereto.

The audio device **10**E includes a microphone boom **180** extending downwardly from the lower end of the support arm **100**E. The microphone **124**E is disposed at the lower end of the microphone boom **180**.

In the illustrated embodiment, the audio device **10**E can include the interface device **110**E at an upper portion of the stem **96**E. In particular, the interface device **110**E can be disposed at the point at which the support arm **100**E connects to the stem **96**E. Optionally, certain components of the interface device **110**E can be disposed at a rear portion of the stem **96**E, this position being identified by the reference numeral **110**E'.

In this embodiment, the antenna **118**E can be disposed in the frame **82**E, the stem **96**E, the support arm **100**E, or the microphone boom **180**E. However, as noted above, it is preferable that at least a portion of the support **12**E is used as the antenna. More preferably, the support **12**E is made from a metal material, such that at least a portion of the support **12**E is excited by the antenna and thereby forms part of the antenna.

The transceiver **114** can be in the form of a digital wireless transceiver for one-way or two-way communication. For example, the transceiver **114** can be configured to receive a signal from another transmitter and provide audio output to the speakers **14**, **14**A, **14**B, **14**C, **14**D, **14**E, **16**, **16**A, **16**B, **16**C, **16**D, **16**E. Alternatively, the transceiver **114** can be configured to receive an analog audio signal from microphone **75**, **124**, **124**D, **124**E, convert the signal to a digital signal, and transmit the signal to another audio device, such as, for example, but without limitation, a cell phone, a palm top computer, a laptop computer or an audio recording device.

The over-the-head configuration of the audio device **10**E advantageously allows distribution of the load across a wearer's head, as well as positioning of relatively bulky or heavy electronics along the length of (i.e., inside) the audio device **10**E or at the posterior aspect of the audio device **10**E such as at the occipital end of the audio device **10**E. This enables the audio device **10**E to carry electronic equipment in a streamlined fashion, out of the wearer's field of view, and in a manner which distributes the weight across the head of the wearer such that the eyewear tends not to shift under the load, and uncomfortable pressure is not placed upon the wearer's nose, ears or temple regions.

In this embodiment, additional functional attachments may be provided as desired anywhere along the length of the frame, lenses or orbitals of the audio device **10**E. For example, earphones may be directed towards the wearer's ear from one or two earphone supports extending rearwardly from the front of the eyeglass, down from the top of the audio device **10**E or forwardly from the rear of the audio device **10**E. Similarly, one or more microphones may be directed at the wearer's mouth from one or two microphone supports connected to the orbitals or other portion of the audio device **10**E.

With reference to FIGS. **17** and **18**, a communication protocol between the audio device S, B and the transceiver **114** is described. In this embodiment, the transceiver **114** is configured for one-way communication. The transceiver includes a receiver and decoder **202** and a digital-to-audio converter **204**.

As noted above with reference to FIG. **8**, the audio device S, B can be any one of a number of different audio devices. For example, but without limitation, the audio device S, B can be a personal audio player such as a tape player, a CD player, a DVD player, an MP3 player, and the like. Alternatively, where the transceiver **114** is configured only to transmit a signal, the audio device S, B can be, for example, but without limitation, an audio recording device, a palm top computer, a laptop computer, a cell phone, and the like.

For purposes of illustration, the audio device S, B will be configured only to transmit a signal to the transceiver **114**. Thus, in this embodiment, the audio device S, B includes an MP3 player **206** and an encoder and transmitter **208**. An antenna **210** is illustrated schematically and is connected to the encoder and transmitter **208**. As an illustrative example, the MP3 player **206** outputs a signal at 128 kbps (NRZ data). However, other data rates can be used. The encoder and transmitter **208** is configured to encode the 128 kbps signal from the MP3 player and to transmit it through the antenna **210**. For example, the encoder and transmitter **208** can be configured to transmit the encoded signal on a carrier signal centered on 49 MHz.

The receiver and decoder **202** can be configured to receive the carrier signal of 49 MHz through the antenna **118**, decode the digital signal, and transmit the digital signal to the digital-to-audio converter **204**. The digital-to-audio converter **204** can be connected to the speakers **14**,**16** and thereby provide an audio output that is audible to the user.

With reference to FIG. **18**, the 128 kbps signal from the MP3 player **206** is identified by the reference numeral **212**. In one embodiment, the encoder and transmitter **208** can be configured to encode the signal **212** from the MP3 player **206**. The encoded signal from the encoder and transmitter **208** is identified by reference numeral **216**.

The encoder and transmitter **208** can be configured to encode each pulse **214** of the signal **212** into a pattern of pulses, one pattern being identified by the reference numeral **218**.

In the lower portion of FIG. **18**, signal **220** represents an enlarged illustration of the portion of the signal **216** identified by a circle **222**. As shown in FIG. **18**, the pattern **218** is comprised of a series of 50 MHz and 48 MHz signals.

With reference to FIG. **19**, a more detailed illustration of the transceiver **114** is illustrated therein. As shown in FIG. **19**, the transceiver includes a preamplifier **230**, a band pass filter **232**, and an amplifier **234** connected in series. The preamplifier **230** and the amplifier **234** can be of any known type, as known to those of ordinary skill in the art. The band filter **232**, in the present embodiment, can be constructed as a band pass filter, allowing signals having a frequency from 48 MHz to 50 MHz, inclusive, to pass therethrough. Alternatively, the band filter **232** can be comprised of three band pass filters configured to allow frequencies centered on 48 MHz, 49 MHz, and 50 MHz, respectively, pass therethrough.

The transceiver **114** also includes a signal detector **236** and a system clock circuit **238**. The signal detector **236** comprises three signal detectors, i.e., a 49 MHz detector

240, a 48 MHz detector 242 and a 50 MHz detector 244. The 49 MHz detector 240 is connected to a carrier detector 246. As is schematically illustrated in FIG. 19, when the signal detector 236 detects a 49 MHz signal, which corresponds to a state in which no audio signal is being transmitted from the MP3 player 206, the carrier detector 246 causes the transceiver 114 to enter a sleep mode, schematically illustrated by the operation block 248.

As the detectors 242, 244 detect 48 MHz and 50 MHz detectors, respectively, they output signals to a spread spectrum pattern detector 250. The spread spectrum pattern detector outputs a corresponding signal to a serial-to-parallel converter 252. The output of the serial-to-parallel converter 252 is output to a digital-to-analog converter 204. A "class D" audio amplifier (not shown), for example, but without limitation, can be connected to the output of the digital-to-audio converter 204 to thereby supply an audio signal to the speakers 14, 14A, 14B, 14C, 14D, 14E, 16, 16A, 16B, 16C, 16D, 16E. It is to be noted that the encoding performed by the encoder and transmitter 208 can be in accordance with known signal processing techniques, such as, for example, but without limitation, CDMA, TDMA, FDM, FM, FSK, PSK, BPSK, QPSK, M-ARYPSK, MSK, etc. In this embodiment, the transceiver 114 can operate with a single channel.

With reference to FIG. 20, a dual channel transceiver 114*i* is schematically illustrated therein. In this modification, the transceiver 114*i* is configured to simultaneously receive two signals, one signal centered on 46 MHz, and a second signal centered on 49 MHz. Thus, the transceiver 114*i* includes four band-pass filters. The first filter 250 is configured to allow a signal at 45.9 MHz plus or minus 100 kHz to pass therethrough. A second filter 252 is configured to allow signals at 46.1 MHz plus or minus 100 kHz to pass therethrough. The third filter 254 is configured to allow signals at 48.9 MHz plus or minus 100 kHz to pass therethrough. A fourth filter 256 is configured to allow signals at 49.1 MHz plus or minus 100 kHz to pass therethrough. As such, the transceiver 114 can receive two simultaneous signals, as noted above, one being centered at 46 MHz and one being centered at 49 MHz. Thus, this modification can be used to receive two audio signals simultaneously, for example, left and right signals of the stereo audio signal.

Each of the transceivers 114, 114*i*, illustrated in FIGS. 17–20, can be configured to receive one pattern 218, a plurality of different signals 218 or only one unique pattern 218. Additionally, as known in the art, the transceiver 114 or 114*i* and the encoder 208 can include pseudo random generators which vary the pattern 218 according to a predetermined sequence. Thus, the receiver and decoder 202 can be configured to auto synchronize by recognizing a portion of the predetermined sequence.

In an application where the transceiver 114 operates according to the BLUETOOTH™ standards, the transceiver 114 communicates with the transmitter according to a spread spectrum protocol so as to establish communication in a short range wireless environment with the minimal risk of interference with other devices. For example, the transceiver 114 can communicate with a BLUETOOTH™ enabled MP3 player, or other audio device. The audio device 10C can receive the output signal from the BLUETOOTH™ enabled MP3 player, and then output the audio signals to the interface 116. Optionally, the signal can be a stereo signal. The interface 116 can then direct the left and right audio signals to the speakers 14, 14A, 14B, 14C, 14D, 14E, 16, 16A, 16B, 16C, 16D, 16E through the speaker lines 120, 122.

In accordance with the BLUETOOTH™ standard, for example, but without limitation, the transceiver 114 can operate in a half duplex mode in which signals are transmitted in only one direction. For example, at any one moment, the transceiver 114 can only either receive signals and direct them to the speakers 14, 14A, 14B, 14C, 14D, 14E, 16, 16A, 16B, 16C, 16D, 16E or transmit signals, for example, from the microphone 75, 124, 124D, 124E to another device through the antenna 118, 118D, 118D'. Alternatively, the transceiver 114 can be configured to operate in a full duplex mode in which simultaneous of audio signals are received and transmitted to the speakers 14, 14A, 14B, 14C, 14D, 14E, 16, 16A, 16B, 16C, 16D, 16E and simultaneously audio signals from the microphone 75, 124, 124D, 124E are transmitted through the antenna 118, 118D, 118D' to a cooperating wireless device.

Further, the interface 116 can include a processor and a memory for providing added functionality. For example, the interface 116 can be configured to allow a user to control the cooperating wireless device, such as a cell phone. In an illustrative, non-limiting embodiment, where the transceiver 114 is a BLUETOOTH™ device, the interface 116 can be configured to support a hands-free protocol, as set forth in the BLUETOOTH™ hands-free protocol published Oct. 22, 2001, the entire contents of which is hereby expressly incorporated by reference. Optionally, the interface 116 can be configured to comply with other protocols such as, for example, but without limitation, general access profile, service discovery application profile, cordless telephony profile, intercom profile, serial port profile, headset profile, dialup networking profile, fax profile, land access profile, generic object exchange profile, object push profile, file transfer profile, and synchronization profile, published Oct. 22, 2001, the entire contents of each of which being hereby expressly incorporated by reference. Additionally, the "Specification of the Bluetooth System, Core", version 1.1, published Feb. 22, 2001 is hereby expressly incorporated by reference.

The headset profile is designed to be used for interfacing a headset having one earphone, a microphone, and a transceiver worn by the wearer, for example, on a belt clip, with a cordless phone through a wireless connection. According to the headset profile, certain commands can be issued from a headset, such as the audio devices 10, 10A, 10A', 10B, 10C, 10D, and 10E, using an AT command protocol. In such a protocol, text commands must be input to the BLUETOOTH™ device, which the BLUETOOTH™ device then transmits wirelessly to a synchronized BLUETOOTH™ enabled device. Such commands include, for example, but without limitation, initiating a call, terminating a call, and redialing a previously dialed number.

With reference to FIG. 9A, the interface electronics 116 can include audio or "aural" menus that can be selected by user. For example, a user can initiate an audio menu by depressing the button 150 (FIGS. 10–12). Upon initiation of the audio menus, the interface electronics 116 can send an audio signal to the speakers 14, 14A, 14B, 14C, 14D, 14E, 16, 16A, 16B, 16C, 16D, 16E including a humanoid voice. The voice signal can indicate that a first menu option is available. For example, but without limitation, the first menu choice can be to initiate a call. Thus, when the user pushes the button 150 the first time, the user will hear the words "initiate a call," emanating from the speakers 14, 14A, 14B, 14C, 14D, 14E, 16, 16A, 16B, 16C, 16D, 16E. If the user wishes to initiate a call, the user can depress the button 150 again which will send the appropriate AT command to the

transceiver **114** so as to transmit the proper AT code to the cellular phone source device S, B (FIG. **8**).

The user can be provided with further convenience if there are other menu choices available, for example, if the user does not wish to choose the first menu option, the user can depress either the forward or rearward portions **156**, **158** of the button **150** so as to "scroll" through other audio menu options. For example, other audio menu options can include, for example, but without limitation, phonebook, email, clock, voice commands, and other menu options typically available on cellular phones and/or personal audio devices such as MP3 players.

As an illustrative, but non-limiting example, if a user wishes to access the phonebook, the user can depress the button **150** to initiate the audio menu, then "scroll" to the phonebook by depressing the portions **156** or **158** until the user hears the word "phonebook" in the speakers **14**, **14**A, **14**B, **14**C, **14**D, **14**E, **16**, **16**A, **16**B, **16**C, **16**D, **16**E. Once the user hears the word "phonebook," the user can depress the button **150** again to enter the phonebook. Thereafter, the user can depress the portions **156**, **158** to "scroll" through phonebook entries. As the user scrolls through the phonebook entries, the interface **116** can be configured to cause the cellular phone to scroll through the phonebook and thereby transmit an audio signal of a humanoid voice indicating entries in the phonebook. When the user hears the name of the person or entity which the user desires to call, the user can again push the button **150** to initiate a call to that entity.

In this embodiment, the cell phone can be configured with a text-to-voice speech engine which generates a humanoid voice corresponding to entries of the phonebook. Such speech engines are known in the art and are not described further herein.

A text-to-speech engine can provide further convenient uses for a user. For example, if the cell phone or other source device is configured to receive email, the device can be configured to signal the user with an audio signal that an email has been received. The user can send a signal to the source device so as to open the email. The text-to-speech engine can be configured to read the email to the user. Thus, a user can "listen" to email through the audio device **10**, **10**A, **10**A', **10**B, **10**C, **10**D, **10**E, without manually operating the source device.

A further option is to allow a user to respond to such an email. For example, the user could record an audio file, such as, for example, but without limitation a .WAV, .MP3 file as an attachment to a reply email. For such a feature, the interface **116** can be configured to automatically provide a user with options at the end of an email that is read to the user. For example, after the text-to-speech engine finishes "reading" the email to the user, the interface device **116** can enter another audio menu. Such an audio menu can include a reply option, a forward option, or other options. If a user wishes to reply, the user can "scroll" until the user hears the word "reply." Once the user hears the word "reply" the user can depress the button **150** to enter a reply mode. As noted above, these types of commands can be issued using an AT command protocol, to which the source device will also be configured to respond. As noted above, one audio menu option can include voice command. For example, when a user chooses the voice command option, the interface electronic **116** can reconfigure to send an AT command to the source device, such as a cellular phone, to accept voice commands directly from the transceiver **114**. Thus, as the user speaks, the audio signal is directed to the source device, which in turn is configured to issue audio indicators back to the user, through the speakers **14**, **14**A, **14**B, **14**C, **14**D, **14**E, **16**, **16**A, **16**B, **16**C, **16**D, **16**E, to guide the user through such a voice command.

For example, if a user chooses a voice command option, the user could issue commands such as, for example, but without limitation, "phonebook" or "call alpha." With a source device such as a cellular phone, that has a speech recognition engine and that is properly trained to recognize the voice of the user, the user can automatically enter the phonebook mode or directly call the phonebook listing "alpha," of course, as is apparent to one of ordinary skill in the art, such a voice command protocol could be used to issue other commands as well.

In another alternative, the interface electronics **116** can include a speech recognition engine and audio menus. In this alternative, the interface electronics **116** can recognize speech from the user, convert the speech to AT commands, and control this source device using a standard AT command protocol.

For example, but without limitation, the source device B can be in the form of a palm-top or hand-held computer known as a BLACKBERRY™. The presently marketed BLACKBERRY™ devices can communicate with a variety of wireless networks for receiving email, phone calls, and/or internet browsing. One aspect of at least one of the present inventions includes the realization that such a hand-held computer can include a text-to-speech engine. Thus, such a hand-held computer can be used in conjunction with any of the audio devices **10**, **10**A, **10**A', **10**B to allow a user to "hear" emails, or other text documents without the need to hold or look at the device B. Preferably, the hand-held computer includes a further wireless transceiver compatible with at least one of the transceivers **114**, **114***i*. As such, a user can use any of the audio devices **10**C, **10**D, **10**E to "hear" emails, or other text documents without the need to hold or look at the device B. Thus, a presently preferred hand-held computer, as a non-limiting example, includes a BLACKBERRY™ hand-held device including long range wireless network hardware for email and internet browsing capability, a BLUETOOTH™ transceiver for two-way short range audio and/or data audio communication, and a text-to-speech engine.

Preferably, the transceiver **114** is configured to transmit signals at about 100 mW. More preferably, the transceiver **114** is configured to transmit signals at no more than 100 mW. As such, the transceiver **114** uses less power. This is particularly advantageous because the power source **112** can be made smaller and thus lighter while providing a practicable duration of power between charges or replacement of the power source **112**.

Of course, the foregoing description is that of a preferred construction having certain features, aspects and advantages in accordance with the present invention. Accordingly, various changes and modifications may be made to the above-described arrangements without departing from the spirit and scope of the invention, as defined by the appended claims.

What is claimed is:

1. An eyeglass frame, comprising:

a support for supporting at least one lens in the path of a wearer's field of view;

a first ear stem attached to the support, for extending in a posterior direction along a first side of the wearer's head;

a second ear stem attached to the support, for extending in a posterior direction along a second side of the wearer's head;

at least one speaker supported by the first ear stem with a first mounting mechanism, the first mounting mechanism defining a linear path slang which the speaker can be translated by a user, the first mounting mechanism further defining a pivot configured to allow the speaker to be pivoted about a first pivot axis parallel to the linear path, wherein an electrical conduit extends from the speaker through at least a portion of the first mounting mechanism; and

at least one microphone supported by at least one of the support, first ear stem, and second ear stem, the microphone being arranged to face towards the head of a wearer of the eyeglass frame.

2. An eyeglass frame as in claim **1**, further comprising a power supply replaceably carried by the support.

3. An eyeglass frame as in claim **1**, wherein the support comprises a pair of orbitals supporting the at least one lens and a second lens, respectively, a bridge connecting the orbitals, the microphone being supported by the bridge.

4. An eyeglass frame as in claim **1** additionally comprising a second speaker supported by the second ear stem with a second mounting mechanism, the second mounting mechanism being configured to define a second linear path along which a user can translate the second speaker, the second mounting mechanism being further configured to allow the second speaker to pivot about a second pivot axis parallel to the second linear path.

5. An eyeglass frame as in claim **1**, wherein the mounting mechanism is configured to allow the first speaker to pivot about the first pivot axis over a range of at least about 30–40 degrees.

6. An eyeglass frame as in claim **1**, wherein the mounting mechanism is configured to allow the first speaker to pivot about the first pivot axis over a range of at least about 90 degrees.

7. An eyeglass frame as in claim **1**, wherein the mounting mechanism is configured to allow the first speaker to translate along the linear path over a range of at least about one-quarter of one inch.

8. An eyeglass frame as in claim **1**, wherein the mounting mechanism is configured to allow the first speaker to translate along the linear path over a range of at least about three-quarters of one inch.

9. An eyeglass frame as in claim **1**, wherein the electrical conduit comprises a wire.

10. An eyeglass frame as in claim **1**, wherein the electrical conduit extends through an aperture in the first mounting mechanism.

11. An eyeglass frame as in claim **1**, wherein the first mounting mechanism comprises a rod.

12. An eyeglass, comprising:

a frame configured to support a lens in the path of a wearer's field of view, the frame comprising:

at least one orbital; and

a first earphone support;

a telecommunications receiver positioned inside of the frame;

a telecommunications transmitter positioned inside of the frame;

a first earphone carried by the first earphone support, the earphone support being configured to define a linear path for the first earphone along which a user can translate the first earphone, the first earphone support being further configured to allow the first earphone to pivot about a first pivot axis parallel to the linear path, wherein an electrical conduit extends from the first earphone through at least a portion of the first earphone support; and

a microphone carried by the frame.

13. An eyeglass as in claim **12**, further comprising a digital storage device.

14. An eyeglass as in claim **13**, wherein the digital storage device comprises an MP3 storage device.

15. An eyeglass as in claim **12**, further comprising a power supply carried by the frame.

16. An eyeglass as in claim **15**, wherein the power supply is rechargeable.

17. An eyeglass as in claim **15**, wherein the power supply is replaceably carried by the frame.

18. An eyeglass as in claim **12**, wherein the frame further comprises a second earphone and a second earphone support and wherein the second earphone is carried by the second earphone support.

19. An eyeglass as in claim **18**, wherein the first earphone support extends rearwardly from the front of the eyeglass and second earphone support extends rearwardly from the front of the eyeglass.

20. An eyeglass as in claim **18**, wherein the first earphone support extends down from the frame and second earphone support extends down from the frame.

21. An eyeglass as in claim **12** additionally comprising a second earphone supported by a second earphone support, the second earphone support being configured to define a second linear path along which a user can translate the second earphone, the second earphone support being further configured to allow the second earphone to pivot about a second pivot axis parallel to the second linear path.

22. An eyeglass as in claim **12**, wherein the earphone support is configured to allow the first earphone to pivot about the first pivot axis over a range of at least about 30–40 degrees.

23. An eyeglass as in claim **12**, wherein the first earphone support is configured to allow the first earphone to pivot about the first pivot axis over a range of at least about 90 degrees.

24. An eyeglass as in claim **12**, wherein the earphone support is configured to allow the first earphone to translate along the linear path over a range of at least about one-quarter of one inch.

25. An eyeglass as in claim **12**, wherein the earphone support is configured to allow the first earphone to translate along the linear path over a range of at least about three-quarters of one inch.

26. An eyeglass as in claim **12**, wherein the electrical conduit comprises a wire.

27. An eyeglass as in claim **12**, wherein the electrical conduit extends through an aperture in the first mounting mechanism.

28. An eyeglass as in claim **12**, wherein the first earphone support comprises a rod.

* * * * *

UNITED STATES PATENT AND TRADEMARK OFFICE

CERTIFICATE OF CORRECTION

PATENT NO. : 7,150,526 B2
APPLICATION NO. : 10/628831
DATED : December 19, 2006
INVENTOR(S) : James Jannard et al.

It is certified that error appears in the above-identified patent and that said Letters Patent is hereby corrected as shown below:

On the Title page Item (56) Reference Cited, at column 1, under U.S. Patent Documents, line 2, please delete "Gamer" and insert -- Garner --, therefore.

At column 12, line 4, please delete "31" and insert -- 3I -- therefore.

At column 33, line 3, please delete "slang" and insert -- along --, therefore.

Signed and Sealed this

Twenty-ninth Day of May, 2007

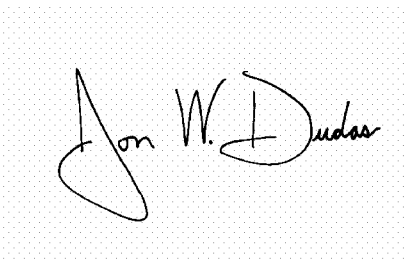

JON W. DUDAS
Director of the United States Patent and Trademark Office