# EXHIBIT B-1

**Invalidity of 11,644,693 in view of Anderson '783**

U.S. Patent No. 5,721,783 ("Anderson '783" or "Anderson"), filed on June 7, 1995, and published on February 24, 1998, qualifies as prior art to U.S. Patent No. 11,644,693 ("the '693 patent") at least under pre-AIA 35 U.S.C. §§ 102(a), (b), and (e). Anderson anticipates or, alone or with other references, renders obvious one or more of the Asserted Claims of the '693 patent. To the extent IngenioSpec contends Anderson does not disclose one or more limitations of the claims, it would have been obvious to combine Anderson with the knowledge of a person of ordinary skill in the art ("POSITA") and/or with one or more of the following references to render the Asserted Claims the '693 patent invalid. The chart below illustrates how the Asserted Claims of the '693 patent are invalid in view of Anderson and/or additional secondary references listed below, including but not limited to the prior art identified in Defendant's Invalidity Contentions.

- U.S. Patent No. 7,187,960 ("Abreu" or "Abreu '960") was filed on April 22, 2003, claims priority to a provisional application filed on April 22, 2002, and published on March 25, 2004, and is thus prior art under at least 35 U.S.C. §§102(a) and (e).
- U.S. Patent No. 7,620,433 ("Bodley" or "Bodley '433") was filed on January 15, 2003, published on July 15, 2004, and issued on November 17, 2009, and is thus prior art under at least 35 U.S.C. §§102(a) and (e).
- WIPO Publication No. 2004/093490A1 ("Hollemans" or "Hollemans '490") was filed on April 15, 2004, and claims priority to a PCT application filed on April 18. 2003, and is thus prior art under at least 35 U.S.C. §§102(a) and (e).
- U.S. Patent No. 7,046,230 ("Zadesky" or "Zadesky '230") was filed on July 1, 2002, published on April 24, 2003, and issued on May 16, 2006, and is thus prior art under at least 35 U.S.C. §§102(a), (b), and (e).
- U.S. Patent No. 6,671,379 ("Nemirovski" or "Nemirovski '379") was filed on July 31, 2001, and issued on December 30, 2003, and is thus prior art under at least 35 U.S.C. §§102(a), (b), and (e).
- U.S. Patent No. 7,150,526 ("Jannard" or "Jannard '526") was filed on July 28, 2003 and is thus prior art under at least 35 U.S.C. §§102(a) and (e).
- WIPO Publication No. WO2001054458 ("Eaton" or "Eaton '458") was filed on January 18, 2001, and published on July 26, 2001, and is therefore prior art under 35 U.S.C. § 102(b).
- U.S. Patent Publication No. 2005/0058313 ("Victorian" or "Victorian '313") was filed on September 11, 2003, and published on March 17, 2005, and is thus prior art under at least 35 U.S.C. §§102(a) and (e).
- U.S. Patent Publication No 2005/0136839A1 ("Seshadri '839" or "Seshadri") was filed on October 27, 2004, claims priority to a provisional application filed on May 28, 2003, and published on June 23, 2005, and is thus prior art under at least 35 U.S.C. §102(e).
- U.S. Patent Publication No 2005/0226446A1 ("Luo '446" or "Luo"), filed on April 8, 2004 and published on October 13, 2005, and is thus prior art under at least 35 U.S.C. §102(e).
- U.S. Patent No. 7010332B1 ("Irvin '332" or "Irvin"), filed on February 21, 2000, was patented on March 7, 2006, and is thus prior art under at least 35 U.S.C. §102(e).

- U.S. Pat. No. 6,373,942 ("Braund") was filed on April 7, 2000 and issued on April 16, 2002, and is thus prior art under at least 35 U.S.C. §§ 102 (a), (b), and (e).
- U.S. Pat. No. 7,979,035 ("Griffin") was filed on Dec. 4, 2007 with a priority claim to Nov. 7, 2000, and is thus prior art under at least 35 U.S.C. § 102 (e).
- U.S. Pub. No. 2003/0068057 ("Miller") was filed on Oct. 6, 2001 and published on Apr. 10, 2003, and is thus prior art under at least 35 U.S.C. §§ 102 (a), (b), and (e).
- U.S. Pat. No. 4,955,729 ("Marx") was filed on Mar. 29, 1988 and issued on Sep. 11, 1990, and is thus prior art under at least 35 U.S.C. §§ 102 (a), (b), and (e).
- U.S. Pat. No. 7,542,012 ("Kato") was filed on June 16, 2005 with a priority claim to Dec. 22, 2003 and issued on Jun. 2, 2009, and is thus prior art under at least 35 U.S.C. § 102(e).

With respect to the proposed modifications to Anderson, such modification would have been obvious to try, an obvious combination of prior art elements according to known methods to yield predictable results, a simple substitution of one known element for another to obtain predictable results, a use of known techniques to improve a similar devices or method in the same way, an application of a known technique to a known device or method ready for improvement to yield predictable results, a variation of a known work in one field of endeavor for use in either the same field or a different one based on design incentives or other market forces with variations that are predictable to a POSITA, and/or obvious in view of teachings, suggestions, and motivations in the prior art that would have led a POSITA to modify or combine the prior art references.

The chart below illustrates how the asserted claims of the '693 patent are anticipated by Anderson and/or would have been obvious in view of Abreu, Bodley, Zadesky, Nemirovski, Victorian, Jannard, Eaton, Seshadri, Luo, Irvin and/or additional secondary references. The excerpts cited herein are exemplary. For any claim limitation, Defendant may rely on excerpts cited for any other limitation and/or additional excerpts not set forth fully herein to the extent necessary to provide further explanation for a reference's disclosure of a limitation. Where an excerpt refers to or discusses a figure or figure items, that figure and any additional descriptions of that figure should be understood to be incorporated by reference as if set forth fully herein. Defendant reserves the right to further supplement this chart.

Defendant expressly reserves the right to rely on additional prior art references to demonstrate that certain features were well known in the art and would have been obvious to a POSITA as of the effective filing date of the '693 patent, e.g., to the extent the references cited in the accompanying chart are argued or found not to expressly teach or suggest such features. For example, use of directional microphones in headworn devices, e.g., for voice recognition, receipt of audio commands, sensing of environmental sounds, and noise cancellation were well known features, and it would have been obvious to a POSITA to combine them with those of Anderson for the reasons set forth below. For example, Braund discloses well-known aspects of using a microphone for voice recognition (see, e.g., Braund at 3:47-58, 6:23-27, 8:55-61) and rechargeable battery features (see, e.g., Braund at 9:6-7), as recited in at least claims 17, 25, 26, 52, 83, and 72. Griffin discloses well-known aspects of directional microphones for noise cancellation (see, e.g., Griffin at 4:21-39) and rechargeable battery features (see, e.g., 4:21-5:8, 9:26-33), as recited in at least claims 6-12, 17, 50, 51, 53, 61, and 64-72, 25, 26, 52, and 72. Miller discloses well-known aspects of directional microphones for noise cancellation (see, e.g., Miller at paras. [0044]-[0045], [0062]), as recited in at least claims 6-12, 17, 50, 51, 53, 61, and 64-72. Other well-known features include use of sensors in, on, or with headworn devices, e.g., to determine if/when headworn devices were being worn. For example, Marx discloses well-known aspects of using sensor data to determine if a device is being worn and modifying operation of the device based on that determination (see, e.g., 3:34-4:12), as

recited in at least claims 23, 54, 55, 56, 57, and 73. For further example, Kato discloses well-known aspects of including an accelerometer in a head worn device (see, e.g., 35:3-9), as recited in at least claim 30.

To the extent that these Invalidity Contentions rely on or otherwise embody particular interpretations of terms or phrases in the asserted claims, Defendant is not proposing any such interpretations as proper interpretations or constructions of those terms or phrases. Various positions put forth in this document are predicated on IngenioSpec's apparent interpretation of its claims as evidenced by its Infringement Contentions. Those positions are not intended to and do not necessarily reflect Defendant's interpretation of the true and proper scope of the asserted claims. Defendant further incorporates by reference all reservations of rights set forth in the Invalidity Contentions, as if fully set forth herein.

Defendant's arguments throughout these invalidity contentions are based on IngenioSpec's apparent interpretation of the claims in its infringement contentions. Defendant does not agree that such interpretation is proper and reserves the right to argue that the mapped actions do not infringe any claims of the '693 patent. In the alternative, should the Court or factfinder construe and/or apply the claims in a manner consistent with IngenioSpec's interpretations in its infringement contentions for the '693 patent, the claims are invalid for at least the reasons set forth herein.

| **Claims** | **Prior Art** |
|---|---|
| 1[pre]. A personal audio system operable to at least generate customized audio output, comprising: | To the extent that the preamble is found to be limiting, Anderson '783 expressly or inherently discloses "[a] personal audio system operable to at least generate customized audio output." For example, Anderson discloses a hearing aid with an earpiece in communication with a remote processor unit. *See, e.g.,* Anderson '783 at 1:7–10; FIG. 1. This system generates a customized audio output for a user of the hearing aid, for example, by enhancing audio signals according to a user's needs. *See, e.g.*, Anderson '783 at 1:55–63. The following citations show examples of where Anderson '783 discloses this limitation.<br><br>Anderson '783 at Abstract<br>A hearing aid or audio communication system includes an earpiece (10) that can be hidden in the ear canal, and which communicates wirelessly with a remote processor unit, or RPU (16), that enhances audio signals and can be concealed under clothing. Sounds from the environment are picked up by a microphone (12) in the earpiece and sent with other information over a two-way wireless link (17) to the RPU (16). The wireless link (17) uses microwaves for component miniaturization. Furthermore, use of radar technology to implement the wireless link (17), with an RPU (16) interrogator and earpiece (10) transponder, reduces earpiece size and power, as no microwave oscillator is needed in the earpiece (10). Optional secondary wireless link circuitry (19) can be used between the RPU (16) and a cellular telephone system or other sources of information. Electronic voice recognition and response can control system operation. |

| Claims | Prior Art |
| --- | --- |
| | Anderson ’783 at FIG. 1 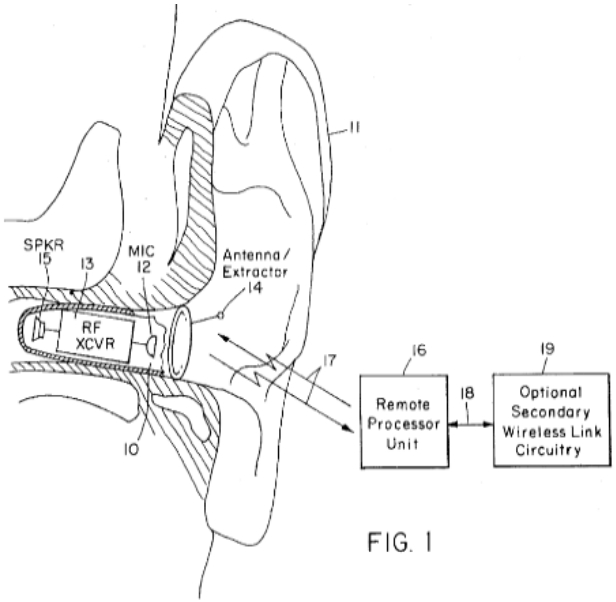  FIG. 1 |

| Claims | Prior Art |
|---|---|
| | Anderson ’783 at FIG. 2 |

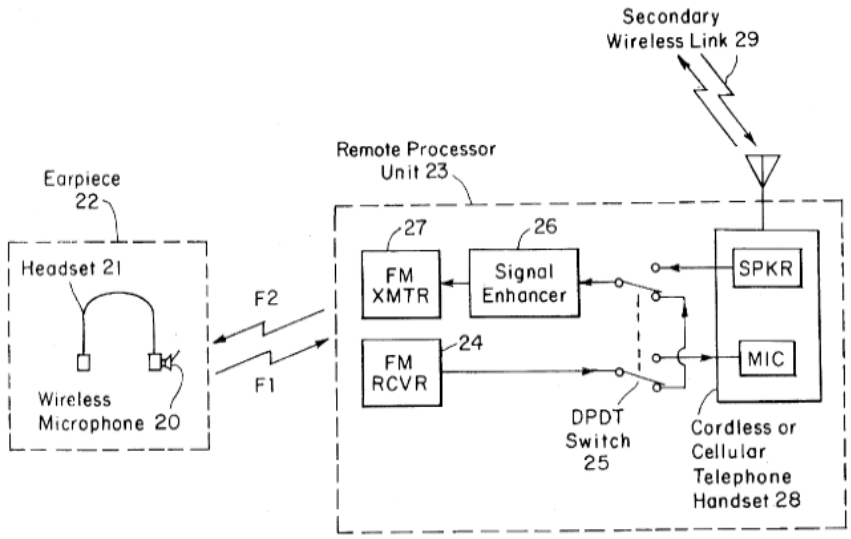


FIG. 2

Anderson ’783 at 1:5–18

The present invention is directed to hearing aids, and in particular to a hearing aid having an earpiece housing worn in or at the ear and a remote processor unit (RPU) worn by or located near the user that wirelessly receives signals from and transmits signals to the earpiece. The present invention is also directed to the use of hearing aid systems as wireless communication devices for hands-free cellular telephone and mobile radio communication "handsets," covert operation and control of hearing aids, hearing protection and noise cancellation simultaneous with binaural hearing aid functions, hearing test equipment, location of misplaced hearing aid system components and wireless cochlear implants.

Anderson ’783 at 1:50–65

The present invention uses an audio path that is different from the audio path used by devices in the prior art. The present invention uses a primary two-way wireless link (not a one-way link as in the prior art) between an earpiece worn in or at the user's ear and an RPU worn by or located near the user. In the present invention, audio signals from the environment are picked up by a microphone in the earpiece (not a hand-held microphone as used by wireless hearing aids in the prior art) and transmitted over the primary two-way wireless link to the RPU (instead of going to processor electronics contained in the earpiece, as in basic

| Claims | Prior Art |
| --- | --- |
| | hearing aids known in the prior art), where the audio signals are enhanced according to the user's needs before transmission over the primary wireless link to the earpiece. Signal processing is performed in the RPU rather than the earpiece to take advantage of relaxed size and power constraints.<br><br>Anderson ’783 at 3:13–18<br>FIG. 1 is a block diagram system overview illustrating how an earpiece (comprising a microphone, RF transceiver, dual-use antenna/extractor and speaker) is worn in the ear, communicates via a primary two-way RF link with an RPU, and also communicates via an optional secondary wireless link to a telephone system.<br><br>Anderson ’783 at 3:52–4:14<br>One preferred embodiment of the invention herein described is shown in block diagram form in FIG. 1. In this figure, the earpiece 10 shown worn in the ear 11 uses a standard completely-in-the-canal (CIC) housing, well known in the art, although many other earpiece housing types known in the art (e.g., behind-the-ear, or BTE) can be used. The earpiece shown in FIG. 1 comprises a microphone 12, RF transceiver 13 with an antenna that doubles as an earpiece extractor 14, and speaker 15. Although the dual-use antenna/extractor arrangement shown in FIG. 1 is often desirable, a separate antenna or antennae can be used in conjunction with many different types of earpiece extractors as appropriate for a particular application. Antennae and extractors can be disguised as ear hair or jewelry (e.g., earrings), or conductive filaments can be permanently implanted in the ear cartilage to act as antennae using a process similar to ear piercing. The earpiece 10 communicates with a remote processor unit (RPU) 16 via a primary two-way RF link 17, although many other wireless link media (e.g., ultrasonic or infrared) may be used instead. The RPU is typically worn under clothing (e.g., carried in a pocket or purse), but may also be worn in plain sight (e.g., on a belt) if desired. The RPU 16 may be connected (via wired or wireless means 18) to optional secondary wireless link circuitry 19 that allows wireless communication between the RPU and other sources of information (e.g., the general subscriber telephone network) via a secondary wireless link. Note that the optional secondary wireless link circuitry 19 may or may not be contained within the RPU case 70 of FIG. 7.<br><br>Anderson ’783 at 5:3–21<br>During normal operation, speech signals from a nearby talker (and other signals in the ambient audio environment) are picked up by the earpiece wireless microphone 20 and transmitted to the RPU FM receiver 24. The RPU FM receiver 24 output level may be adjusted using the RPU FM receiver 24 volume control. The resulting electrical waveform representing signals from the nearby talker travels through the DPDT switch 25, which is set to the lower position as shown in FIG. 2, to the signal enhancer 26. The signal enhancer 26 may be, for example, a voice changer device that varies the pitch of a received speech signal |

| Claims | Prior Art |
|---|---|
| | according to the setting of pushbutton controls located on the RPU signal enhancer 26. The speech signal's pitch can then be raised or lowered as desired to help compensate for a user's hearing loss relative to a particular talker's voice characteristics. The modified speech signal travels from the RPU signal enhancer 26 to the RPU FM transmitter 27, and finally to the earpiece headset 21 receiver where the signal is converted to acoustic waves heard by the user.<br><br>Anderson ’783 at 22:61–23:35<br>Details of normal system operation: During normal operation of the hearing aid with wireless remote processor, sounds from the ambient environment are picked up by a microphone 12 in the earpiece 10 and transmitted with other information (e.g., data representing the earpiece battery 860 voltage as obtained by an A/D 865 converter and transmitted under control of the earpiece ASIC 845 in the auxiliary bit of many successive replies via the reply data register 825) over a primary two-way wireless link 17 to the RPU 16, where the audio signals are enhanced according to the user's needs by the RPU DSP 948. Signal enhancement is achieved via any of a number of techniques well known in the art that use the capabilities of the general-purpose RPU DSP 948. The enhanced audio signals may be combined with other information (e.g., a synthesized voice, generated within the DSP 948, warning that the aforementioned earpiece battery voltage is low) and transmitted from the RPU 16 over the primary wireless link 17 to the earpiece 10, where they are converted by a speaker 15 to sounds that can only be heard by the user 11. Art auxiliary speaker can be supplied in the RPU 16 as a peripheral 950 device that allows people other than the user to hear the same sounds as those produced by the earpiece speaker 15, if desired (as, e.g., when a person other than the user wishes to use the system's optional cellular telephone capabilities). A different, optional secondary two-way wireless link (shown as part of the RPU in FIG. 9 as secondary wireless link circuitry 944, or connected to the RPU by a wired or other, e.g. infrared, wireless link 18 and shown as optional secondary wireless link circuitry 19 in FIG. 1) can be used for communication between the RPU and a cellular telephone system or other sources of information. An RPU keyboard suitable for covert data entry 72, or voice recognition capabilities in the RPU (implemented, e.g., using any of a number of techniques well known in the art that use the general-purpose RPU DSP 948), can be used to control hearing aid parameters (such as amplification level set by the RPU DSP 948) and telephone dialing functions (e.g., automatic dialing of a predefined telephone number using information stored in the RPU DSP 948) in a manner that can be made imperceptible to a casual observer if desired.<br><br>Anderson ’783 at 27:4–24<br>Hearing test: The present invention allows hearing tests to be performed via the earpiece normally worn by the user, without the need for additional expensive test equipment. All signal generation capabilities |

| Claims | Prior Art |
| --- | --- |
| | necessary to perform hearing tests are available in the hearing aid system comprising an earpiece 10 and RPU 16. Specifically, the RPU DSP 948 can be used to generate tones of varying frequencies and amplitudes, as well as other signals known to be useful for hearing test purposes (e.g., nonsense syllables) that are converted to acoustic waves by the earpiece. Such tones are used to perform a hearing test that determines appropriate gain vs. frequency parameters for a program stored in the RPU DSP 948 that performs signal enhancement to compensate for the user's hearing loss. Note that the hearing test program that controls the RPU DSP 948 during the hearing test can be temporarily stored in the RPU DSP 948 for the duration of the test, then deleted upon completion of the test to allow re-use of RPU DSP 948 memory resources during normal operation. The hearing test program may be loaded into the RPU DSP 948 through the secondary wireless link 944 or a wired peripheral link 950.<br><br>To the extent that Anderson ’783 does not disclose any elements of this claim limitation, it would have been obvious to a person having ordinary skill in the art to combine, with the teachings of Anderson ’783, those elements, as known to them or as disclosed by other prior art identified in the cover pleading. |
| [1a] a pair of ear buds, each configured to be placed in an ear of a user; and | Anderson ’783 expressly or inherently discloses “a pair of ear buds, each configured to be placed in an ear of a user.” For example, Anderson ’783 discloses that the hearing aid earpiece 10 can be worn “completely-in-the-canal” of the ear 11, as shown in FIG. 1, and that an ordinarily skilled artisan would recognize that the disclosed embodiments could be implemented in a binaural system, for two ears instead of one. *See, e.g.*, Anderson ’783 at 3:54–55; 4:30–33; FIG. 1. A POSTIA would have also understood each of these in-ear earpieces to be an ear bud.<br><br>The following citations show examples of where Anderson ’783 discloses this limitation. |

| Claims | Prior Art |
| --- | --- |
| | Anderson ’783 at FIG. 1<br> 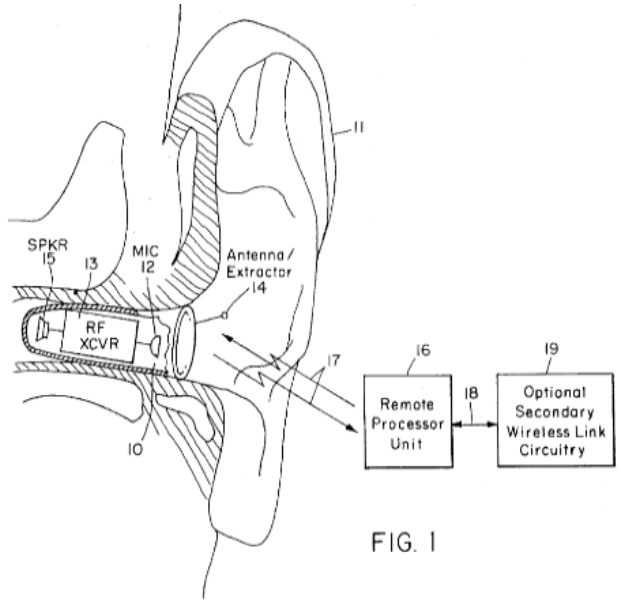 <br><br>FIG. 1<br><br>Anderson ’783 at 3:13–18<br>FIG. 1 is a block diagram system overview illustrating how an earpiece (comprising a microphone, RF transceiver, dual-use antenna/extractor and speaker) is worn in the ear, communicates via a primary two-way RF link with an RPU, and also communicates via an optional secondary wireless link to a telephone system.<br><br>Anderson ’783 at 3:52–4:14<br>One preferred embodiment of the invention herein described is shown in block diagram form in FIG. 1. In this figure, the earpiece 10 shown worn in the ear 11 uses a standard completely-in-the-canal (CIC) housing, well known in the art, although many other earpiece housing types known in the art (e.g., behind-the-ear, or BTE) can be used. The earpiece shown in FIG. 1 comprises a microphone 12, RF transceiver 13 with an antenna that doubles as an earpiece extractor 14, and speaker 15. Although the dual-use antenna/extractor arrangement shown in FIG. 1 is often desirable, a separate antenna or antennae can be used in conjunction with many different types of earpiece extractors as appropriate for a particular application. Antennae and extractors can be disguised as ear hair or jewelry (e.g., earrings), or conductive filaments can be permanently implanted in the ear cartilage to act as antennae using a process similar to ear piercing. The earpiece 10 communicates with a remote processor unit (RPU) 16 via a primary two-way RF link 17, although many |

| Claims | Prior Art |
|---|---|
| | other wireless link media (e.g., ultrasonic or infrared) may be used instead. The RPU is typically worn under clothing (e.g., carried in a pocket or purse), but may also be worn in plain sight (e.g., on a belt) if desired. The RPU 16 may be connected (via wired or wireless means 18) to optional secondary wireless link circuitry 19 that allows wireless communication between the RPU and other sources of information (e.g., the general subscriber telephone network) via a secondary wireless link. Note that the optional secondary wireless link circuitry 19 may or may not be contained within the RPU case 70 of FIG. 7.<br><br>Anderson ’783 at 4:30–33<br>Although the system described here is monaural, it will be clear to those skilled in the art that a binaural (stereo) system can be constructed based on the same principles as the monaural system.<br><br>Anderson ’783 at 22:61–23:35<br>Details of normal system operation: During normal operation of the hearing aid with wireless remote processor, sounds from the ambient environment are picked up by a microphone 12 in the earpiece 10 and transmitted with other information (e.g., data representing the earpiece battery 860 voltage as obtained by an A/D 865 converter and transmitted under control of the earpiece ASIC 845 in the auxiliary bit of many successive replies via the reply data register 825) over a primary two-way wireless link 17 to the RPU 16, where the audio signals are enhanced according to the user's needs by the RPU DSP 948. Signal enhancement is achieved via any of a number of techniques well known in the art that use the capabilities of the general-purpose RPU DSP 948. The enhanced audio signals may be combined with other information (e.g., a synthesized voice, generated within the DSP 948, warning that the aforementioned earpiece battery voltage is low) and transmitted from the RPU 16 over the primary wireless link 17 to the earpiece 10, where they are converted by a speaker 15 to sounds that can only be heard by the user 11. Art auxiliary speaker can be supplied in the RPU 16 as a peripheral 950 device that allows people other than the user to hear the same sounds as those produced by the earpiece speaker 15, if desired (as, e.g., when a person other than the user wishes to use the system's optional cellular telephone capabilities). A different, optional secondary two-way wireless link (shown as part of the RPU in FIG. 9 as secondary wireless link circuitry 944, or connected to the RPU by a wired or other, e.g. infrared, wireless link 18 and shown as optional secondary wireless link circuitry 19 in FIG. 1) can be used for communication between the RPU and a cellular telephone system or other sources of information. An RPU keyboard suitable for covert data entry 72, or voice recognition capabilities in the RPU (implemented, e.g., using any of a number of techniques well known in the art that use the general-purpose RPU DSP 948), can be used to control hearing aid parameters (such as amplification level set by the RPU DSP 948) and telephone dialing functions (e.g., automatic dialing of a predefined telephone number using information stored in the RPU DSP 948) in a manner that can be made |

| Claims | Prior Art |
| --- | --- |
| | imperceptible to a casual observer if desired.<br><br>In binaural embodiments, "[t]wo earpieces (one in each ear)" communicate with the RPU. *See* Anderson at 23:36-39. Anderson explains, in the context of the headset embodiment of FIG. 2, that binaural embodiments are "based on the same principles" as monaural embodiments. *See id.* at 4:30-33.<br><br>A POSITA would have found it obvious to implement the FIG. 1 earpieces in a binaural configuration to achieve the disclosed advantages of binaural embodiments—such as directionality and hearing protection—for in-ear devices. *See id.* at 23:36-65. Because the FIG. 1 earpieces are "functionally similar" to those of FIG. 2, and because binaural embodiments rely on the same principles as monaural embodiments, such an implementation would have been straightforward and reasonably likely to succeed. *See id.* at 4:30-35.<br><br>Accordingly, the POSITA would have understood references in Anderson to a single earpiece —whether in headset embodiments or in-ear embodiments—to apply to either or both earpieces in a binaural embodiment.<br><br>To the extent that Anderson '783 does not disclose any elements of this claim limitation, it would have been obvious to a person having ordinary skill in the art to combine, with the teachings of Anderson '783, those elements, as known to them or as disclosed by other prior art identified in the cover pleading. |
| [1b] a mobile communication device at least for supporting audio output, the mobile communication device configured to store at least a hearing profile associated with the user, the stored hearing profile associated with the user at least characterizes hearing impairment regarding the user's ability to hear, | Anderson '783 expressly or inherently discloses "a mobile communication device at least for supporting audio output, the mobile communication device configured to store at least a hearing profile associated with the user, the stored hearing profile associated with the user at least characterizes hearing impairment regarding the user's ability to hear." For example, the hearing aid includes a remote processor unit (i.e., a mobile communication device) that communicates with the earpiece to support audio output. *See, e.g.*, Anderson '783 at 1:7–10; 1:51–55; 3:42–43; 22:62–23:14; 23:19–26; FIGS. 1,9. The RPU enhances audio signals "according to a user's needs" and stores a program that "performs signal enhancement to compensate for the user's hearing loss," as described in detail in the citations below. *See, e.g.*, Anderson '783 at 5:11-21; 23:3-5, 23:29-31; 27:15-17.<br><br>The following citations show examples of where Anderson '783 discloses this limitation. |

| Claims | Prior Art |
| --- | --- |
| | Anderson ’783 at FIG. 1 (showing, e.g., that the RPU 16 communicates with the earpieces 10 to support audio output and receive audio signals from a microphone 12 located in the earpiece) 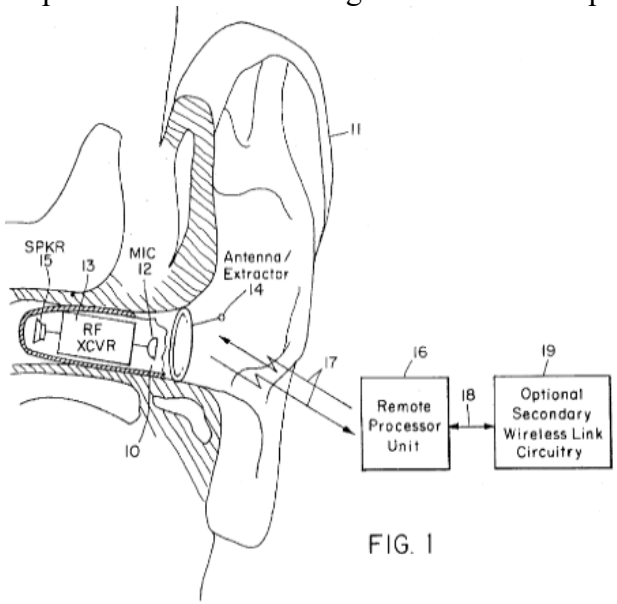  FIG. 1 |

| Claims | Prior Art |
|---|---|
| | Anderson ’783 at FIG. 9 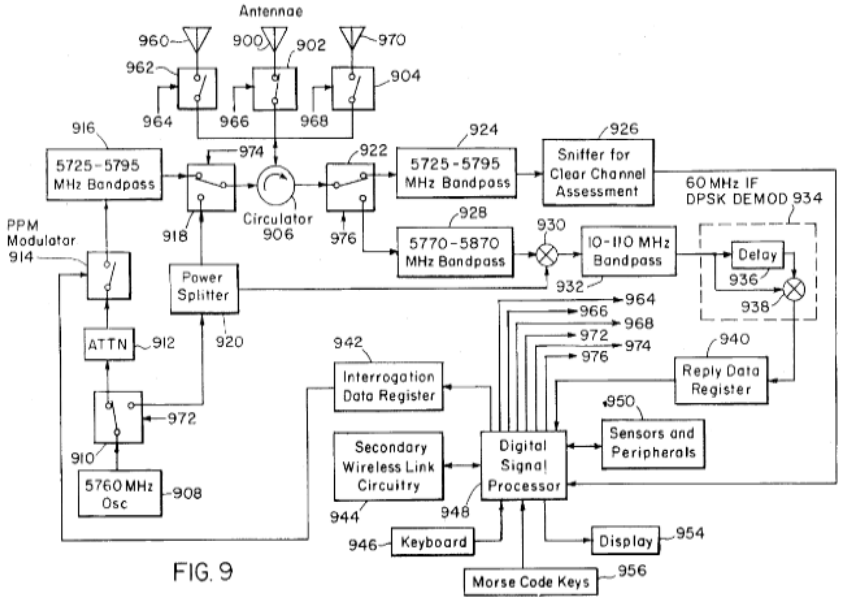  FIG. 9<br><br>The RPU 16 is a mobile communication device, as it is “worn by … the user,” communicates wirelessly with the earpieces, and includes secondary wireless link circuitry (944) for communication with a cellular telephone system, enabling the system to function as a virtual telephone handset. *See* Anderson at 1:51-55, 23:19-26, 24:45-25:14, FIG. 9.<br><br>Anderson ’783 at 1:5–18<br>The present invention is directed to hearing aids, and in particular to a hearing aid having an earpiece housing worn in or at the ear and a remote processor unit (RPU) worn by or located near the user that wirelessly receives signals from and transmits signals to the earpiece. The present invention is also directed to the use of hearing aid systems as wireless communication devices for hands-free cellular telephone and mobile radio communication "handsets," covert operation and control of hearing aids, hearing protection and noise cancellation simultaneous with binaural hearing aid functions, hearing test equipment, location of misplaced hearing aid system components and wireless cochlear implants.<br><br>Anderson ’783 at 1:50–65<br>The present invention uses an audio path that is different from the audio path used by devices in the prior art. The present invention uses a primary two-way wireless link (not a one-way link as in the prior art) between |

| Claims | Prior Art |
| --- | --- |
| | an earpiece worn in or at the user's ear and an RPU worn by or located near the user. In the present invention, audio signals from the environment are picked up by a microphone in the earpiece (not a hand-held microphone as used by wireless hearing aids in the prior art) and transmitted over the primary two-way wireless link to the RPU (instead of going to processor electronics contained in the earpiece, as in basic hearing aids known in the prior art), where the audio signals are enhanced according to the user's needs before transmission over the primary wireless link to the earpiece. Signal processing is performed in the RPU rather than the earpiece to take advantage of relaxed size and power constraints.<br><br>Anderson ’783 at 2:60–3:5<br>A further object of this invention is to provide some degree of protection for the residual hearing capability of a hearing-impaired user (or a non-impaired user who wishes to avoid impairment) in a wireless hearing aid system having the simultaneous capabilities of noise cancellation and binaural processing (e.g., directionality). Other objects of the invention are to provide a convenient means for testing a user's hearing capability without the need for additional equipment, to assist users in the location of misplaced hearing aid system components, and to provide profoundly deaf cochlear implant patients with a wireless system allowing improved freedom of movement compared to existing wire-connected systems.<br><br>Anderson ’783 at 3:42–43<br>FIG. 9 is a block diagram showing details of an RPU for a full-featured preferred embodiment of the invention.<br><br>Anderson ’783 at 5:3–21<br>During normal operation, speech signals from a nearby talker (and other signals in the ambient audio environment) are picked up by the earpiece wireless microphone 20 and transmitted to the RPU FM receiver 24. The RPU FM receiver 24 output level may be adjusted using the RPU FM receiver 24 volume control. The resulting electrical waveform representing signals from the nearby talker travels through the DPDT switch 25, which is set to the lower position as shown in FIG. 2, to the signal enhancer 26. The signal enhancer 26 may be, for example, a voice changer device that varies the pitch of a received speech signal according to the setting of pushbutton controls located on the RPU signal enhancer 26. The speech signal's pitch can then be raised or lowered as desired to help compensate for a user's hearing loss relative to a particular talker's voice characteristics. The modified speech signal travels from the RPU signal enhancer 26 to the RPU FM transmitter 27, and finally to the earpiece headset 21 receiver where the signal is converted to |

| Claims | Prior Art |
|---|---|
| | acoustic waves heard by the user.<br><br>Anderson ’783 at 22:61–23:35<br>Details of normal system operation: During normal operation of the hearing aid with wireless remote processor, sounds from the ambient environment are picked up by a microphone 12 in the earpiece 10 and transmitted with other information (e.g., data representing the earpiece battery 860 voltage as obtained by an A/D 865 converter and transmitted under control of the earpiece ASIC 845 in the auxiliary bit of many successive replies via the reply data register 825) over a primary two-way wireless link 17 to the RPU 16, where the audio signals are enhanced according to the user's needs by the RPU DSP 948. Signal enhancement is achieved via any of a number of techniques well known in the art that use the capabilities of the general-purpose RPU DSP 948. The enhanced audio signals may be combined with other information (e.g., a synthesized voice, generated within the DSP 948, warning that the aforementioned earpiece battery voltage is low) and transmitted from the RPU 16 over the primary wireless link 17 to the earpiece 10, where they are converted by a speaker 15 to sounds that can only be heard by the user 11. Art auxiliary speaker can be supplied in the RPU 16 as a peripheral 950 device that allows people other than the user to hear the same sounds as those produced by the earpiece speaker 15, if desired (as, e.g., when a person other than the user wishes to use the system's optional cellular telephone capabilities). A different, optional secondary two-way wireless link (shown as part of the RPU in FIG. 9 as secondary wireless link circuitry 944, or connected to the RPU by a wired or other, e.g. infrared, wireless link 18 and shown as optional secondary wireless link circuitry 19 in FIG. 1) can be used for communication between the RPU and a cellular telephone system or other sources of information. An RPU keyboard suitable for covert data entry 72, or voice recognition capabilities in the RPU (implemented, e.g., using any of a number of techniques well known in the art that use the general-purpose RPU DSP 948), can be used to control hearing aid parameters (such as amplification level set by the RPU DSP 948) and telephone dialing functions (e.g., automatic dialing of a predefined telephone number using information stored in the RPU DSP 948) in a manner that can be made imperceptible to a casual observer if desired.<br><br>Anderson ’783 at 27:4–24<br>Hearing test: The present invention allows hearing tests to be performed via the earpiece normally worn by the user, without the need for additional expensive test equipment. All signal generation capabilities necessary to perform hearing tests are available in the hearing aid system comprising an earpiece 10 and RPU 16. Specifically, the RPU DSP 948 can be used to generate tones of varying frequencies and amplitudes, as well as other signals known to be useful for hearing test purposes (e.g., nonsense syllables) that are converted to acoustic waves by the earpiece. Such tones are used to perform a hearing test that |

| Claims | Prior Art |
| --- | --- |
| | determines appropriate gain vs. frequency parameters for a program stored in the RPU DSP 948 that performs signal enhancement to compensate for the user's hearing loss. Note that the hearing test program that controls the RPU DSP 948 during the hearing test can be temporarily stored in the RPU DSP 948 for the duration of the test, then deleted upon completion of the test to allow re-use of RPU DSP 948 memory resources during normal operation. The hearing test program may be loaded into the RPU DSP 948 through the secondary wireless link 944 or a wired peripheral link 950.<br><br>A POSITA would have understood these disclosures to teach that the RPU 16 stores a user-specific hearing profile based on the test results—*i.e.*, gain-versus-frequency parameters—and uses that profile to compensate for hearing loss. This is analogous to the hearing profile described in the ’693 patent, which comprises digital data representing a user’s “amplification across frequencies” (analogous to Anderson’s gain-versus-frequency parameters) and is stored in a portable device. *See* ’693 patent at 68:62-69:52.<br><br>To the extent that Anderson ’783 does not disclose any elements of this claim limitation, it would have been obvious to a person having ordinary skill in the art to combine, with the teachings of Anderson ’783, those elements, as known to them or as disclosed by other prior art identified in the cover pleading.<br><br>For example, a POSITA would have understood the signal enhancement described in the citations above to modify the speech signal based on a hearing impairment of the user, e.g., the user’s impaired ability to hear particular audio frequencies (which correspond to a signal’s pitch). Anderson ’783 discloses that such hearing impairment can be identified by subjecting the user to a hearing test that “determines appropriate gain vs. frequency parameters” for the stored program. *See, e.g.,* 27:4-24. A POSITA would have understood these disclosures of Anderson ’783 to teach the RPU 16 storing a hearing profile for the user based on the results of the hearing test, i.e., such that the hearing profile stores the appropriate gain vs. frequency parameters for the user; and using the hearing profile to compensate for the user’s hearing loss, as described above in the citations. |
| [1c] the mobile communication device configured to produce audio output signals customized for the user based on at least the stored hearing profile associated with the user such that the customized audio output signals at least compensate for the hearing | Anderson ’783 expressly or inherently discloses “the mobile communication device configured to produce audio output signals customized for the user based on at least the stored hearing profile associated with the user such that the customized audio output signals at least compensate for the hearing impairment regarding the user's ability to hear.” For example, the RPU 16 uses a stored hearing profile to compensate for the user’s hearing loss, at least by, for example, by adjusting hearing aid parameters in accordance with the stored information.<br><br>*See* above at claim [1b].<br><br>The following citations show examples of where Anderson ’783 discloses this limitation.<br><br>Anderson ’783 at 22:61–23:35<br>Details of normal system operation: During normal operation of the hearing aid with wireless remote |

| Claims | Prior Art |
| --- | --- |
| impairment regarding the user's ability to hear, | processor, sounds from the ambient environment are picked up by a microphone 12 in the earpiece 10 and transmitted with other information (e.g., data representing the earpiece battery 860 voltage as obtained by an A/D 865 converter and transmitted under control of the earpiece ASIC 845 in the auxiliary bit of many successive replies via the reply data register 825) over a primary two-way wireless link 17 to the RPU 16, where the audio signals are enhanced according to the user's needs by the RPU DSP 948. Signal enhancement is achieved via any of a number of techniques well known in the art that use the capabilities of the general-purpose RPU DSP 948. The enhanced audio signals may be combined with other information (e.g., a synthesized voice, generated within the DSP 948, warning that the aforementioned earpiece battery voltage is low) and transmitted from the RPU 16 over the primary wireless link 17 to the earpiece 10, where they are converted by a speaker 15 to sounds that can only be heard by the user 11. Art auxiliary speaker can be supplied in the RPU 16 as a peripheral 950 device that allows people other than the user to hear the same sounds as those produced by the earpiece speaker 15, if desired (as, e.g., when a person other than the user wishes to use the system's optional cellular telephone capabilities). A different, optional secondary two-way wireless link (shown as part of the RPU in FIG. 9 as secondary wireless link circuitry 944, or connected to the RPU by a wired or other, e.g. infrared, wireless link 18 and shown as optional secondary wireless link circuitry 19 in FIG. 1) can be used for communication between the RPU and a cellular telephone system or other sources of information. An RPU keyboard suitable for covert data entry 72, or voice recognition capabilities in the RPU (implemented, e.g., using any of a number of techniques well known in the art that use the general-purpose RPU DSP 948), can be used to control hearing aid parameters (such as amplification level set by the RPU DSP 948) and telephone dialing functions (e.g., automatic dialing of a predefined telephone number using information stored in the RPU DSP 948) in a manner that can be made imperceptible to a casual observer if desired.<br><br>Anderson ’783 at 27:4–24<br>Hearing test: The present invention allows hearing tests to be performed via the earpiece normally worn by the user, without the need for additional expensive test equipment. All signal generation capabilities necessary to perform hearing tests are available in the hearing aid system comprising an earpiece 10 and RPU 16. Specifically, the RPU DSP 948 can be used to generate tones of varying frequencies and amplitudes, as well as other signals known to be useful for hearing test purposes (e.g., nonsense syllables) that are converted to acoustic waves by the earpiece. Such tones are used to perform a hearing test that determines appropriate gain vs. frequency parameters for a program stored in the RPU DSP 948 that performs signal enhancement to compensate for the user's hearing loss. Note that the hearing test program that controls the RPU DSP 948 during the hearing test can be temporarily stored in the RPU DSP 948 for the duration of the test, then deleted upon completion of the test to allow re-use of RPU DSP 948 memory resources during normal operation. The hearing test program may be loaded into the RPU DSP 948 through |

| Claims | Prior Art |
|---|---|
| | the secondary wireless link 944 or a wired peripheral link 950.<br><br>To the extent that Anderson ’783 does not disclose any elements of this claim limitation, it would have been obvious to a person having ordinary skill in the art to combine, with the teachings of Anderson ’783, those elements, as known to them or as disclosed by other prior art identified in the cover pleading. |
| [1d] the mobile communication device configured to produce the customized audio output signals using at least signal amplification, and | Anderson ’783 expressly or inherently discloses “the mobile communication device configured to produce the customized audio output signals using at least signal amplification.” For example, the RPU 16 performs processing for the hearing aid based on hearing aid parameters, such as amplification. The following citations show examples of where Anderson ’783 discloses this limitation.<br><br>Anderson ’783 at 2:20–39<br>It is an object of the present invention to provide a new and useful auditory aid for hearing-impaired persons (i.e., those having certain residual hearing) by removing audio signal enhancement functions from the earpiece and placing them in an RPU. Use of an RPU provides several advantages over systems that attempt to place all system capabilities within the earpiece. The RPU approach allows a simple earpiece design comprising a miniature low-power wireless transceiver, microphone and speaker. Note that the speaker is also known in the hearing aid art as a "receiver," but the term "speaker" is used here to avoid confusion (similarly, the term "talker," not "speaker," is used to describe a human producing vocal sounds). The resulting earpiece is extremely small, can be hidden from view in the ear canal if desired, and allows complete freedom of movement when a primary two-way wireless link to the RPU is used. Processing for all major system capabilities, such as amplification and other forms of signal enhancement, takes place in the RPU where size and power constraints are relaxed, leading to a cost-effective design.<br><br>Anderson ’783 at 22:61–23:35<br>Details of normal system operation: During normal operation of the hearing aid with wireless remote processor, sounds from the ambient environment are picked up by a microphone 12 in the earpiece 10 and transmitted with other information (e.g., data representing the earpiece battery 860 voltage as obtained by an A/D 865 converter and transmitted under control of the earpiece ASIC 845 in the auxiliary bit of many successive replies via the reply data register 825) over a primary two-way wireless link 17 to the RPU 16, where the audio signals are enhanced according to the user's needs by the RPU DSP 948. Signal enhancement is achieved via any of a number of techniques well known in the art that use the capabilities of the general-purpose RPU DSP 948. The enhanced audio signals may be combined with other information (e.g., a synthesized voice, generated within the DSP 948, warning that the aforementioned earpiece battery voltage is low) and transmitted from the RPU 16 over the primary wireless link 17 to the earpiece 10, where |

| Claims | Prior Art |
| --- | --- |
| | they are converted by a speaker 15 to sounds that can only be heard by the user 11. Art auxiliary speaker can be supplied in the RPU 16 as a peripheral 950 device that allows people other than the user to hear the same sounds as those produced by the earpiece speaker 15, if desired (as, e.g., when a person other than the user wishes to use the system's optional cellular telephone capabilities). A different, optional secondary two-way wireless link (shown as part of the RPU in FIG. 9 as secondary wireless link circuitry 944, or connected to the RPU by a wired or other, e.g. infrared, wireless link 18 and shown as optional secondary wireless link circuitry 19 in FIG. 1) can be used for communication between the RPU and a cellular telephone system or other sources of information. An RPU keyboard suitable for covert data entry 72, or voice recognition capabilities in the RPU (implemented, e.g., using any of a number of techniques well known in the art that use the general-purpose RPU DSP 948), can be used to control hearing aid parameters (such as amplification level set by the RPU DSP 948) and telephone dialing functions (e.g., automatic dialing of a predefined telephone number using information stored in the RPU DSP 948) in a manner that can be made imperceptible to a casual observer if desired.<br><br>Anderson ’783 at 27:4–24<br>Hearing test: The present invention allows hearing tests to be performed via the earpiece normally worn by the user, without the need for additional expensive test equipment. All signal generation capabilities necessary to perform hearing tests are available in the hearing aid system comprising an earpiece 10 and RPU 16. Specifically, the RPU DSP 948 can be used to generate tones of varying frequencies and amplitudes, as well as other signals known to be useful for hearing test purposes (e.g., nonsense syllables) that are converted to acoustic waves by the earpiece. Such tones are used to perform a hearing test that determines appropriate gain vs. frequency parameters for a program stored in the RPU DSP 948 that performs signal enhancement to compensate for the user's hearing loss. Note that the hearing test program that controls the RPU DSP 948 during the hearing test can be temporarily stored in the RPU DSP 948 for the duration of the test, then deleted upon completion of the test to allow re-use of RPU DSP 948 memory resources during normal operation. The hearing test program may be loaded into the RPU DSP 948 through the secondary wireless link 944 or a wired peripheral link 950.<br><br>To the extent that Anderson ’783 does not disclose any elements of this claim limitation, it would have been obvious to a person having ordinary skill in the art to combine, with the teachings of Anderson ’783, those elements, as known to them or as disclosed by other prior art identified in the cover pleading. |
| [1e] the mobile communication device configured to transmit | Anderson ’783 expressly or inherently discloses “the mobile communication device configured to transmit the customized audio output signals to the pair of ear buds.” For example, enhanced audio signals are “transmitted |

| Claims | Prior Art |
| --- | --- |
| the customized audio output signals to the pair of ear buds, | from the RPU 16 over the primary wireless link 17 to the earpiece 10, where they are converted by a speaker 15 to sounds that can only be heard by the user 11." *See, e.g.*, Anderson '783 at 23:11–14. In binaural embodiments, the audio output signals are "transmitted from the RPU to the left and right earpiece speakers." *See* Anderson at 24:10-14.<br><br>The following citations show examples of where Anderson '783 discloses this limitation.<br><br>Anderson '783 at FIG. 1<br><br> 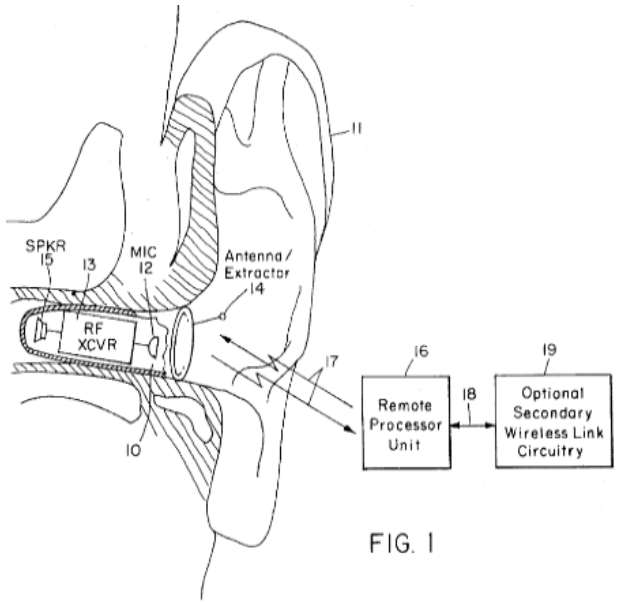 <br><br>FIG. 1<br><br>Anderson '783 at 22:61–23:35<br>Details of normal system operation: During normal operation of the hearing aid with wireless remote processor, sounds from the ambient environment are picked up by a microphone 12 in the earpiece 10 and transmitted with other information (e.g., data representing the earpiece battery 860 voltage as obtained by an A/D 865 converter and transmitted under control of the earpiece ASIC 845 in the auxiliary bit of many successive replies via the reply data register 825) over a primary two-way wireless link 17 to the RPU 16, where the audio signals are enhanced according to the user's needs by the RPU DSP 948. Signal enhancement is achieved via any of a number of techniques well known in the art that use the capabilities of the general-purpose RPU DSP 948. The enhanced audio signals may be combined with other information (e.g., a synthesized voice, generated within the DSP 948, warning that the aforementioned earpiece battery voltage is low) and transmitted from the RPU 16 over the primary wireless link 17 to the earpiece 10, where |

| Claims | Prior Art |
| --- | --- |
| | they are converted by a speaker 15 to sounds that can only be heard by the user 11. Art auxiliary speaker can be supplied in the RPU 16 as a peripheral 950 device that allows people other than the user to hear the same sounds as those produced by the earpiece speaker 15, if desired (as, e.g., when a person other than the user wishes to use the system's optional cellular telephone capabilities). A different, optional secondary two-way wireless link (shown as part of the RPU in FIG. 9 as secondary wireless link circuitry 944, or connected to the RPU by a wired or other, e.g. infrared, wireless link 18 and shown as optional secondary wireless link circuitry 19 in FIG. 1) can be used for communication between the RPU and a cellular telephone system or other sources of information. An RPU keyboard suitable for covert data entry 72, or voice recognition capabilities in the RPU (implemented, e.g., using any of a number of techniques well known in the art that use the general-purpose RPU DSP 948), can be used to control hearing aid parameters (such as amplification level set by the RPU DSP 948) and telephone dialing functions (e.g., automatic dialing of a predefined telephone number using information stored in the RPU DSP 948) in a manner that can be made imperceptible to a casual observer if desired.<br><br>To the extent that Anderson ’783 does not disclose any elements of this claim limitation, it would have been obvious to a person having ordinary skill in the art to combine, with the teachings of Anderson ’783, those elements, as known to them or as disclosed by other prior art identified in the cover pleading. |
| [1f] wherein each of the ear buds is configured to receive at least a portion of the customized audio output signals transmitted by the mobile communication device, and | Anderson ’783 expressly or inherently discloses “wherein each of the ear buds is configured to receive at least a portion of the customized audio output signals transmitted by the mobile communication device.” For example, the earpiece communicates with the RPU via a wireless link to receive the enhanced audio signals.<br><br>*See* above at claim [1e].<br><br>The following citations show examples of where Anderson ’783 discloses this limitation. |

| Claims | Prior Art |
| --- | --- |
| | Anderson ’783 at FIG. 1<br> 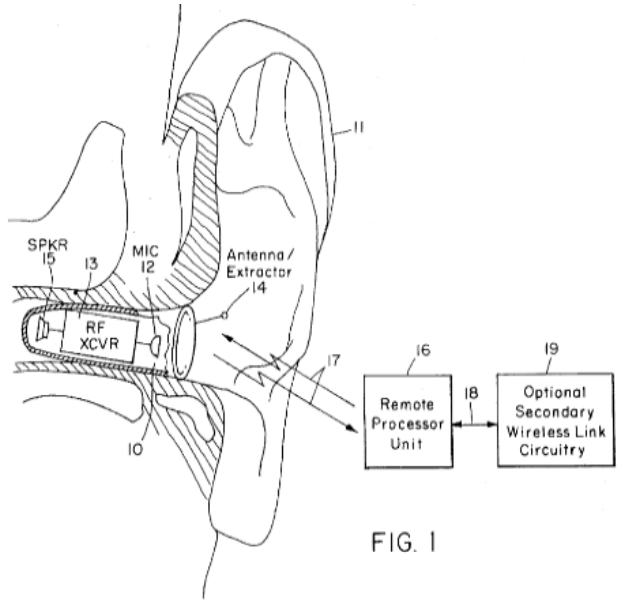 <br><br>FIG. 1<br><br>Anderson ’783 at 3:13–18<br>FIG. 1 is a block diagram system overview illustrating how an earpiece (comprising a microphone, RF transceiver, dual-use antenna/extractor and speaker) is worn in the ear, communicates via a primary two-way RF link with an RPU, and also communicates via an optional secondary wireless link to a telephone system.<br><br>Anderson ’783 at 3:52–4:14<br>One preferred embodiment of the invention herein described is shown in block diagram form in FIG. 1. In this figure, the earpiece 10 shown worn in the ear 11 uses a standard completely-in-the-canal (CIC) housing, well known in the art, although many other earpiece housing types known in the art (e.g., behind-the-ear, or BTE) can be used. The earpiece shown in FIG. 1 comprises a microphone 12, RF transceiver 13 with an antenna that doubles as an earpiece extractor 14, and speaker 15. Although the dual-use antenna/extractor arrangement shown in FIG. 1 is often desirable, a separate antenna or antennae can be used in conjunction with many different types of earpiece extractors as appropriate for a particular application. Antennae and extractors can be disguised as ear hair or jewelry (e.g., earrings), or conductive filaments can be permanently implanted in the ear cartilage to act as antennae using a process similar to ear piercing. The earpiece 10 communicates with a remote processor unit (RPU) 16 via a primary two-way RF link 17, although many |

| Claims | Prior Art |
|---|---|
| | other wireless link media (e.g., ultrasonic or infrared) may be used instead. The RPU is typically worn under clothing (e.g., carried in a pocket or purse), but may also be worn in plain sight (e.g., on a belt) if desired. The RPU 16 may be connected (via wired or wireless means 18) to optional secondary wireless link circuitry 19 that allows wireless communication between the RPU and other sources of information (e.g., the general subscriber telephone network) via a secondary wireless link. Note that the optional secondary wireless link circuitry 19 may or may not be contained within the RPU case 70 of FIG. 7.<br><br>Anderson ’783 at 4:30–33<br>Although the system described here is monaural, it will be clear to those skilled in the art that a binaural (stereo) system can be constructed based on the same principles as the monaural system.<br><br>Anderson ’783 at 22:61–23:35<br>Details of normal system operation: During normal operation of the hearing aid with wireless remote processor, sounds from the ambient environment are picked up by a microphone 12 in the earpiece 10 and transmitted with other information (e.g., data representing the earpiece battery 860 voltage as obtained by an A/D 865 converter and transmitted under control of the earpiece ASIC 845 in the auxiliary bit of many successive replies via the reply data register 825) over a primary two-way wireless link 17 to the RPU 16, where the audio signals are enhanced according to the user's needs by the RPU DSP 948. Signal enhancement is achieved via any of a number of techniques well known in the art that use the capabilities of the general-purpose RPU DSP 948. The enhanced audio signals may be combined with other information (e.g., a synthesized voice, generated within the DSP 948, warning that the aforementioned earpiece battery voltage is low) and transmitted from the RPU 16 over the primary wireless link 17 to the earpiece 10, where they are converted by a speaker 15 to sounds that can only be heard by the user 11. Art auxiliary speaker can be supplied in the RPU 16 as a peripheral 950 device that allows people other than the user to hear the same sounds as those produced by the earpiece speaker 15, if desired (as, e.g., when a person other than the user wishes to use the system's optional cellular telephone capabilities). A different, optional secondary two-way wireless link (shown as part of the RPU in FIG. 9 as secondary wireless link circuitry 944, or connected to the RPU by a wired or other, e.g. infrared, wireless link 18 and shown as optional secondary wireless link circuitry 19 in FIG. 1) can be used for communication between the RPU and a cellular telephone system or other sources of information. An RPU keyboard suitable for covert data entry 72, or voice recognition capabilities in the RPU (implemented, e.g., using any of a number of techniques well known in the art that use the general-purpose RPU DSP 948), can be used to control hearing aid parameters (such as amplification level set by the RPU DSP 948) and telephone dialing functions (e.g., automatic dialing of a predefined telephone number using information stored in the RPU DSP 948) in a manner that can be made |

| Claims | Prior Art |
| --- | --- |
| | imperceptible to a casual observer if desired.<br><br>A POSITA would have understood that for the customized audio signals transmitted from the RPU to the earpieces to be "converted by a speaker 15 to sounds" (Anderson at 23:11-14), they must be received by the earpieces.<br><br>To the extent that Anderson '783 does not disclose any elements of this claim limitation, it would have been obvious to a person having ordinary skill in the art to combine, with the teachings of Anderson '783, those elements, as known to them or as disclosed by other prior art identified in the cover pleading. |
| [1g] wherein each of the ear buds is configured to generate at least a portion of the customized audio output for the user in accordance with at least the portion of the customized audio output signals being received. | Anderson '783 expressly or inherently discloses "wherein each of the ear buds is configured to generate at least a portion of the customized audio output for the user in accordance with at least the portion of the customized audio output signals being received." For example, Anderson '783 discloses a speaker that converts incoming signals from the RPU to sounds heard by the user. The customized audio output signals are transmitted from the RPU to the earpieces, "where they are converted by a speaker 15 to sounds" for the user. *See* Anderson at 23:11-14. A POSITA would thus understand the sounds to be generated by the earpieces' respective speakers in accordance with the earpieces receiving the audio output signals.<br><br>*See* above at claims [1e] and [1f].<br><br>The following citations show examples of where Anderson '783 discloses this limitation. |

| Claims | Prior Art |
| --- | --- |
| | Anderson ’783 at FIG. 1<br> 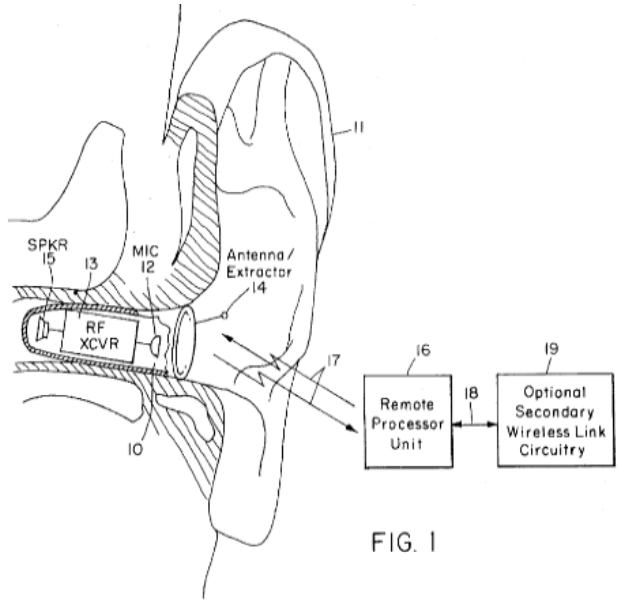 <br><br>FIG. 1<br><br>Anderson ’783 at 3:52–4:14<br>One preferred embodiment of the invention herein described is shown in block diagram form in FIG. 1. In this figure, the earpiece 10 shown worn in the ear 11 uses a standard completely-in-the-canal (CIC) housing, well known in the art, although many other earpiece housing types known in the art (e.g., behind-the-ear, or BTE) can be used. The earpiece shown in FIG. 1 comprises a microphone 12, RF transceiver 13 with an antenna that doubles as an earpiece extractor 14, and speaker 15. Although the dual-use antenna/extractor arrangement shown in FIG. 1 is often desirable, a separate antenna or antennae can be used in conjunction with many different types of earpiece extractors as appropriate for a particular application. Antennae and extractors can be disguised as ear hair or jewelry (e.g., earrings), or conductive filaments can be permanently implanted in the ear cartilage to act as antennae using a process similar to ear piercing. The earpiece 10 communicates with a remote processor unit (RPU) 16 via a primary two-way RF link 17, although many other wireless link media (e.g., ultrasonic or infrared) may be used instead. The RPU is typically worn under clothing (e.g., carried in a pocket or purse), but may also be worn in plain sight (e.g., on a belt) if desired. The RPU 16 may be connected (via wired or wireless means 18) to optional secondary wireless link circuitry 19 that allows wireless communication between the RPU and other sources of information (e.g., the general subscriber telephone network) via a secondary wireless link. Note that the optional secondary wireless link |

| Claims | Prior Art |
|---|---|
| | circuitry 19 may or may not be contained within the RPU case 70 of FIG. 7.<br><br>Anderson ’783 at 4:30–33<br>Although the system described here is monaural, it will be clear to those skilled in the art that a binaural (stereo) system can be constructed based on the same principles as the monaural system.<br><br>Anderson ’783 at 22:11–61<br>Stand-alone earpiece operation: If an earpiece cannot communicate with an RPU for any reason, stand-alone earpiece operation as a CIC hearing aid is generally desirable. Examples include occasions where the RPU must be turned off by pushing the RPU power-off key 78 (e.g., situations where operation of wireless transmitters is prohibited such as aircraft takeoffs and classified military briefings), RPU battery or other RPU electronics failure, misplacement of an RPU, and primary wireless link 17 interference. Note that a microphone located in the earpiece 10 is preferred to a body-worn microphone, since only an earpiece microphone 12 can be used to provide the desired default CIC hearing aid function (earpiece microphones also provide superior audio localization capabilities as the microphone moves with the user's head, and provide reduced wind and clothing noise compared with body-worn microphones). Parameters that control the stand-alone earpiece operation are stored in the earpiece CIC default parameter storage 870, which is accessed by the ASIC 845 to implement the desired stand-alone functions as described earlier. CIC default parameters include, but are not limited to, settings for the nominal and maximum allowable earpiece volume. Other information contained in the default parameter storage 870 includes, but is not limited to, the communication address and L/R (left/right) selection bit. To ensure that the CIC default parameter storage information cannot be changed inadvertently, changes are only allowed when the earpiece is not in use as, for example, when the earpiece battery 860 is being charged. A battery charging detector 840, that is sensitive to the high-level magnetic induction fields commonly used for earpiece battery charging, indicates to the ASIC 845 that the default parameter storage 870 values may be changed upon receipt of an appropriate command from the RPU. Specifically, to change information in the earpiece CIC default parameter storage 870, a user first activates the earpiece battery charging system, e.g., by placing the earpiece in a recharger/storage tray well known in the art. The RPU keyboard 946 is then used to enter a command to the DSP 948 that indicates the user's desire to change information in the default parameter storage 870, followed by the new information to be stored. The DSP 948 causes the RPU to transmit an interrogation with a reserved address code to which all earpieces being charged within the communication range of the RPU are receptive. The information that is to ultimately be loaded into the earpiece default parameter storage 870 is then transmitted by the RPU using the auxiliary bit field of many successive interrogations, said interrogations are received by the earpiece, and the desired information is loaded into the CIC default |

| Claims | Prior Art |
| --- | --- |
| | parameter storage 870 under control of the ASIC 845.<br><br>Anderson ’783 at 22:61–23:35<br>Details of normal system operation: During normal operation of the hearing aid with wireless remote processor, sounds from the ambient environment are picked up by a microphone 12 in the earpiece 10 and transmitted with other information (e.g., data representing the earpiece battery 860 voltage as obtained by an A/D 865 converter and transmitted under control of the earpiece ASIC 845 in the auxiliary bit of many successive replies via the reply data register 825) over a primary two-way wireless link 17 to the RPU 16, where the audio signals are enhanced according to the user's needs by the RPU DSP 948. Signal enhancement is achieved via any of a number of techniques well known in the art that use the capabilities of the general-purpose RPU DSP 948. The enhanced audio signals may be combined with other information (e.g., a synthesized voice, generated within the DSP 948, warning that the aforementioned earpiece battery voltage is low) and transmitted from the RPU 16 over the primary wireless link 17 to the earpiece 10, where they are converted by a speaker 15 to sounds that can only be heard by the user 11. Art auxiliary speaker can be supplied in the RPU 16 as a peripheral 950 device that allows people other than the user to hear the same sounds as those produced by the earpiece speaker 15, if desired (as, e.g., when a person other than the user wishes to use the system's optional cellular telephone capabilities). A different, optional secondary two-way wireless link (shown as part of the RPU in FIG. 9 as secondary wireless link circuitry 944, or connected to the RPU by a wired or other, e.g. infrared, wireless link 18 and shown as optional secondary wireless link circuitry 19 in FIG. 1) can be used for communication between the RPU and a cellular telephone system or other sources of information. An RPU keyboard suitable for covert data entry 72, or voice recognition capabilities in the RPU (implemented, e.g., using any of a number of techniques well known in the art that use the general-purpose RPU DSP 948), can be used to control hearing aid parameters (such as amplification level set by the RPU DSP 948) and telephone dialing functions (e.g., automatic dialing of a predefined telephone number using information stored in the RPU DSP 948) in a manner that can be made imperceptible to a casual observer if desired.<br><br>To the extent that Anderson ’783 does not disclose any elements of this claim limitation, it would have been obvious to a person having ordinary skill in the art to combine, with the teachings of Anderson ’783, those elements, as known to them or as disclosed by other prior art identified in the cover pleading.<br><br>For example, a POSITA would have understood that each of the ear buds (i.e., each respective speaker 15 of the pair of ear buds) generates at least a portion of the enhanced audio output signals, at least because Anderson ’783 discloses a binaural system in which stereo audio signals are presented to both ears via the pair of ear buds. *See, e.g., id.* at 4:30-33. |

| Claims | Prior Art |
|---|---|
| 2. A personal audio system as recited in claim 1, wherein the mobile communication device is configured to establish the hearing profile for the user. | Anderson ’783 expressly or inherently discloses “[a] personal audio system as recited in claim 1, wherein the mobile communication device is configured to establish the hearing profile for the user,” for example, via the generation of tones that provide a hearing test.<br><br>*See* above at claims [1pre]-[1g].<br><br>The following citations show examples of where Anderson ’783 discloses this limitation.<br><br>Anderson ’783 at 27:4–24<br>Hearing test: The present invention allows hearing tests to be performed via the earpiece normally worn by the user, without the need for additional expensive test equipment. All signal generation capabilities necessary to perform hearing tests are available in the hearing aid system comprising an earpiece 10 and RPU 16. Specifically, the RPU DSP 948 can be used to generate tones of varying frequencies and amplitudes, as well as other signals known to be useful for hearing test purposes (e.g., nonsense syllables) that are converted to acoustic waves by the earpiece. Such tones are used to perform a hearing test that determines appropriate gain vs. frequency parameters for a program stored in the RPU DSP 948 that performs signal enhancement to compensate for the user's hearing loss. Note that the hearing test program that controls the RPU DSP 948 during the hearing test can be temporarily stored in the RPU DSP 948 for the duration of the test, then deleted upon completion of the test to allow re-use of RPU DSP 948 memory resources during normal operation. The hearing test program may be loaded into the RPU DSP 948 through the secondary wireless link 944 or a wired peripheral link 950.<br><br>To the extent that Anderson ’783 does not disclose any elements of this claim limitation, it would have been obvious to a person having ordinary skill in the art to combine, with the teachings of Anderson ’783, those elements, as known to them or as disclosed by other prior art identified in the cover pleading. For example, a POSITA would have understood at the time of invention that establishing a hearing profile for a user to include determining gain versus frequency parameters for a signal enhancement program that compensates for the user’s hearing loss. |
| 3. A personal audio system as recited in claim 2, wherein the hearing profile for the user is established by the mobile communication device at least via generating audio tones and outputting such to one or more of the ear buds and receiving a | Anderson ’783, alone or in view of Eaton, expressly or inherently discloses “[a] personal audio system as recited in claim 2, wherein the hearing profile for the user is established by the mobile communication device at least via generating audio tones and outputting such to one or more of the ear buds and receiving a user indication corresponding to the user's ability to hear the generated audio tones.”<br><br>The following citations show examples of where Anderson ’783 discloses this limitation.<br><br>*See* above at claims [1pre]-[1g]; [2]. |

| Claims | Prior Art |
| --- | --- |
| user indication corresponding to the user's ability to hear the generated audio tones. | Anderson ’783 at 27:4–24<br>Hearing test: The present invention allows hearing tests to be performed via the earpiece normally worn by the user, without the need for additional expensive test equipment. All signal generation capabilities necessary to perform hearing tests are available in the hearing aid system comprising an earpiece 10 and RPU 16. Specifically, the RPU DSP 948 can be used to generate tones of varying frequencies and amplitudes, as well as other signals known to be useful for hearing test purposes (e.g., nonsense syllables) that are converted to acoustic waves by the earpiece. Such tones are used to perform a hearing test that determines appropriate gain vs. frequency parameters for a program stored in the RPU DSP 948 that performs signal enhancement to compensate for the user's hearing loss. Note that the hearing test program that controls the RPU DSP 948 during the hearing test can be temporarily stored in the RPU DSP 948 for the duration of the test, then deleted upon completion of the test to allow re-use of RPU DSP 948 memory resources during normal operation. The hearing test program may be loaded into the RPU DSP 948 through the secondary wireless link 944 or a wired peripheral link 950.<br><br>As Anderson describes above, the RPU “generate[s] tones of varying frequencies and amplitudes” and presents them to the user via the earpiece to determine gain-versus-frequency parameters for compensating hearing loss. *See* Anderson at 27:4-17. Because audio playback through the earpiece “can only be heard by the user,” the test necessarily relies on user feedback to determine whether the tones are audible. *See id.* at 23:11-14. A POSITA would have understood that such hearing tests depend on the user to indicate which tones are heard, as the user is best positioned to assess the audibility of tones presented via the earpiece.<br><br>To the extent that Anderson ’783 does not disclose any elements of this claim limitation, it would have been known to a person having ordinary skill in the art at the time of the invention that executing software to test a user’s hearing is a common part of fitting a user for a hearing aid. For example, Eaton ’458 teaches:<br><br>Eaton ’458 at 11:6–15<br>Figure 6 is a pictorial diagram illustrating a system in accordance with one embodiment. Figure 6 contains elements similar to those discussed in Figure 1. For these elements, the aforementioned discussion related to them is incorporated here in full. The system 600 includes hearing aid systems $602_A$ and $602_B$. The hearing aid system $602_A$ comprises a programming module $602_{A1}$ and a hearing aid device $602_{A0}$. The hearing aid system $602_B$ comprises the hearing aid device $602_{B0}$. Whereas a mobile device 606 communicates with the hearing aid device $602_{A0}$ of the hearing aid system $602_A$ through the programming module $602_{A1}$, the mobile device 606 communicates directly with the hearing aid device $602_{B0}$ of the hearing aid system $602_B$. |

| Claims | Prior Art |
| --- | --- |
| | Eaton ’458 at 11:16–28<br>For illustrative purposes only, suppose a patient is being fitted with the hearing aid system $602_B$. During the fitting process, a piece of software may be executed on the mobile device 606 to interact with the patient wearing the hearing aid system $602_B$. Such interaction includes sending audio test signals from the software executing on the mobile device 606 to the hearing aid system $602_B$. Such software includes a user interface. The aural response from the patient is either automatically sent back to the testing software by the hearing aid system $602_B$ or is recorded manually into the testing software through the mobile device 606. Once sufficient aural responses are collected, in one embodiment, such aural responses are sent to a programming fitting server 616 through the cellular/mobile network 610 and the Internet 614; in another embodiment, such aural responses are formatted to form an audiogram before sending the information to the programming fitting server 616.<br><br>Eaton ’458 at FIG. 6<br> 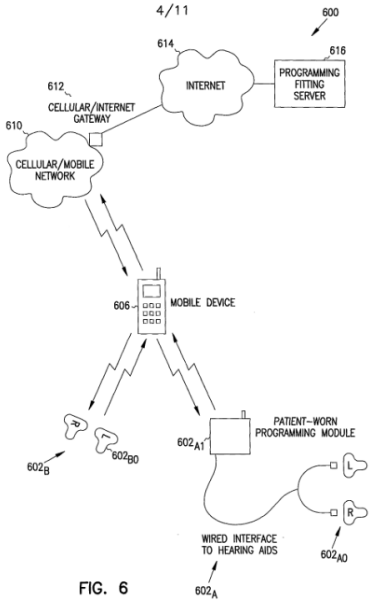 <br><br>FIG. 6<br><br>A POSITA would have been motivated to combine the teachings of Anderson and Eaton to meet the claim limitations with a reasonable expectation of success. A POSITA would have understood Anderson ’783’s hearing test to teach receiving a user indication corresponding to the user’s ability to hear the tones generated by |

| Claims | Prior Art |
|---|---|
| | the RPU because a POSITA would have understood such tests of hearing loss to rely on the user to indicate which audio tones are heard, for example, as disclosed by Eaton ’458.<br><br>To the extent that Anderson ’783, alone or in view of Eaton, does not disclose any elements of this claim limitation, it would have been obvious to a person having ordinary skill in the art to combine, with the teachings of Anderson ’783 and Eaton, those elements, as known to them or as disclosed by other prior art identified in the cover pleading. |
| 4. A personal audio system as recited in claim 1, wherein the signal amplification is frequency-dependent amplification. | Anderson ’783 expressly or inherently discloses “[a] personal audio system as recited in claim 1, wherein the signal amplification is frequency-dependent amplification.”<br><br>For example, Anderson discloses that a program stored in the RPU “performs signal enhancement to compensate for a user’s hearing loss” using “appropriate gain vs. frequency parameters.” *See, e.g., id.* at 27:13-17. S POSITA would have understood the disclosed “gain” to refer to a gain factor, indicating a level of signal amplification; and, accordingly, that the disclosed “gain vs. frequency parameters” for signal enhancement includes frequency-dependent gain factors used to perform frequency-dependent amplification. The following citations show examples of where Anderson ’783 discloses this limitation:<br><br>*See* above at claim [1d].<br><br>To the extent that Anderson ’783 does not disclose any elements of this claim limitation, it would have been obvious to a person having ordinary skill in the art to combine, with the teachings of Anderson ’783, those elements, as known to them or as disclosed by other prior art identified in the cover pleading. |
| 5[pre]. A personal audio system as recited in claim 1, wherein each of the earbuds includes a speaker, and | Anderson ’783 expressly or inherently discloses “[a] personal audio system as recited in claim 1, wherein each of the earbuds includes a speaker.” The following citations show examples of where Anderson ’783 discloses this limitation.<br><br>*See* above at claims [1a], [1e], [1g].<br><br>As described for claim 1[A], Anderson ’783 discloses that “a binaural (stereo) system can be constructed based on the same principles as the monaural system.” *See id.* at 4:30-33. Accordingly, a POSITA would have understood Anderson ’783 to disclose a pair of ear buds (i.e., one for each of the user’s two ears), where each ear bud includes a speaker.<br><br>To the extent that Anderson ’783 does not disclose any elements of this claim limitation, it would have been obvious to a person having ordinary skill in the art to combine, with the teachings of Anderson ’783, those elements, as known to them or as disclosed by other prior art identified in the cover pleading. |

| Claims | Prior Art |
|---|---|
| [5a] wherein the at least a portion of the customized audio output being generated by each of the ear buds is generated by the corresponding speaker. | Anderson ’783 expressly or inherently discloses “wherein the at least a portion of the customized audio output being generated by each of the ear buds is generated by the corresponding speaker.” Anderson discloses that enhanced audio signals received from the RPU are transmitted to the earpiece, “where they are converted by a speaker 15 to sounds that can only be heard by the user 11.” *See id.* at 23:11-14. The following citations show examples of where Anderson ’783 discloses this limitation.<br>*See* above at claims [1a], [1e], [1g].<br>To the extent that Anderson ’783 does not disclose any elements of this claim limitation, it would have been obvious to a person having ordinary skill in the art to combine, with the teachings of Anderson ’783, those elements, as known to them or as disclosed by other prior art identified in the cover pleading. |
| 6. A personal audio system as recited in claim 1, wherein at least one of the earbuds in the pair of earbuds comprises an array of microphones configured for directional audio pickup. | Anderson ’783, alone or in view of Nemirovski, expressly or inherently discloses “[a] personal audio system as recited in claim 1, wherein at least one of the earbuds in the pair of earbuds comprises an array of microphones configured for directional audio pickup,” for example, by disclosing both primary and auxiliary microphones housed in the same case. The following citations show examples of where Anderson ’783 discloses this limitation.<br>Anderson ’783 at FIG. 1<br> 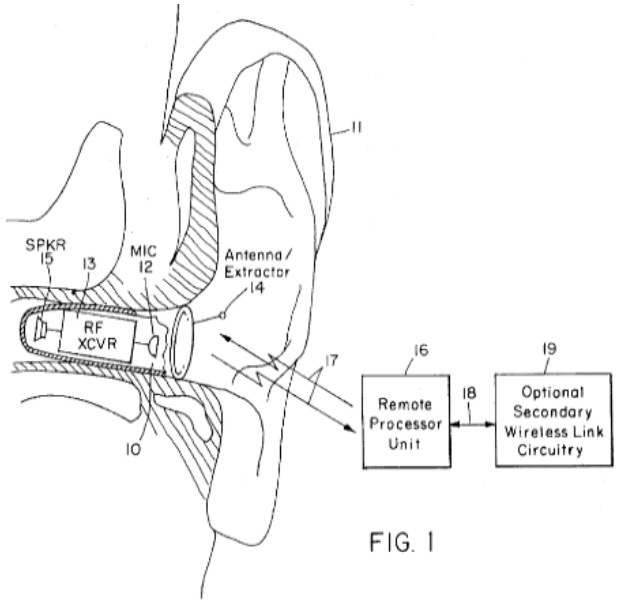 <br><br>FIG. 1 |

| Claims | Prior Art |
| --- | --- |
| | Anderson ’783 at 3:52–4:14<br>One preferred embodiment of the invention herein described is shown in block diagram form in FIG. 1. In this figure, the earpiece 10 shown worn in the ear 11 uses a standard completely-in-the-canal (CIC) housing, well known in the art, although many other earpiece housing types known in the art (e.g., behind-the-ear, or BTE) can be used. The earpiece shown in FIG. 1 comprises a microphone 12, RF transceiver 13 with an antenna that doubles as an earpiece extractor 14, and speaker 15. Although the dual-use antenna/extractor arrangement shown in FIG. 1 is often desirable, a separate antenna or antennae can be used in conjunction with many different types of earpiece extractors as appropriate for a particular application. Antennae and extractors can be disguised as ear hair or jewelry (e.g., earrings), or conductive filaments can be permanently implanted in the ear cartilage to act as antennae using a process similar to ear piercing. The earpiece 10 communicates with a remote processor unit (RPU) 16 via a primary two-way RF link 17, although many other wireless link media (e.g., ultrasonic or infrared) may be used instead. The RPU is typically worn under clothing (e.g., carried in a pocket or purse), but may also be worn in plain sight (e.g., on a belt) if desired. The RPU 16 may be connected (via wired or wireless means 18) to optional secondary wireless link circuitry 19 that allows wireless communication between the RPU and other sources of information (e.g., the general subscriber telephone network) via a secondary wireless link. Note that the optional secondary wireless link circuitry 19 may or may not be contained within the RPU case 70 of FIG. 7.<br><br>Anderson ’783 at 5:3–21<br>During normal operation, speech signals from a nearby talker (and other signals in the ambient audio environment) are picked up by the earpiece wireless microphone 20 and transmitted to the RPU FM receiver 24. The RPU FM receiver 24 output level may be adjusted using the RPU FM receiver 24 volume control. The resulting electrical waveform representing signals from the nearby talker travels through the DPDT switch 25, which is set to the lower position as shown in FIG. 2, to the signal enhancer 26. The signal enhancer 26 may be, for example, a voice changer device that varies the pitch of a received speech signal according to the setting of pushbutton controls located on the RPU signal enhancer 26. The speech signal's pitch can then be raised or lowered as desired to help compensate for a user's hearing loss relative to a particular talker's voice characteristics. The modified speech signal travels from the RPU signal enhancer 26 to the RPU FM transmitter 27, and finally to the earpiece headset 21 receiver where the signal is converted to acoustic waves heard by the user.<br><br>Anderson ’783 at 6:8–25<br>The user's voice (and other signals in the ambient audio environment) is picked up by the earpiece wireless microphone 20, transmitted to the RPU 23 FM receiver 24, sent through the DPDT switch 25 to the |

| Claims | Prior Art |
|---|---|
| | microphone input of the handset 28 (the handset's microphone transducer may be removed) and transmitted on the secondary wireless link 29 to, e.g., the general subscriber telephone network. Signals from the secondary wireless link 29 are received by the handset 28, sent from the speaker output of the handset 28 (the handset's speaker may be removed) via the DPDT switch 25 to the signal enhancer 26, FM transmitter 27 and finally to the earpiece headset 21 receiver where the signals are converted to acoustic waves heard by the user. Note that the RPU 23 may also include straight-forward connections to a "personal digital assistant" computer, or voice-operated devices connected to the FM receiver 24 output and not shown in FIG. 2.<br><br>Anderson ’783 at 22:11–61<br>Stand-alone earpiece operation: If an earpiece cannot communicate with an RPU for any reason, stand-alone earpiece operation as a CIC hearing aid is generally desirable. Examples include occasions where the RPU must be turned off by pushing the RPU power-off key 78 (e.g., situations where operation of wireless transmitters is prohibited such as aircraft takeoffs and classified military briefings), RPU battery or other RPU electronics failure, misplacement of an RPU, and primary wireless link 17 interference. Note that a microphone located in the earpiece 10 is preferred to a body-worn microphone, since only an earpiece microphone 12 can be used to provide the desired default CIC hearing aid function (earpiece microphones also provide superior audio localization capabilities as the microphone moves with the user's head, and provide reduced wind and clothing noise compared with body-worn microphones). Parameters that control the stand-alone earpiece operation are stored in the earpiece CIC default parameter storage 870, which is accessed by the ASIC 845 to implement the desired stand-alone functions as described earlier. CIC default parameters include, but are not limited to, settings for the nominal and maximum allowable earpiece volume. Other information contained in the default parameter storage 870 includes, but is not limited to, the communication address and L/R (left/right) selection bit. To ensure that the CIC default parameter storage information cannot be changed inadvertently, changes are only allowed when the earpiece is not in use as, for example, when the earpiece battery 860 is being charged. A battery charging detector 840, that is sensitive to the high-level magnetic induction fields commonly used for earpiece battery charging, indicates to the ASIC 845 that the default parameter storage 870 values may be changed upon receipt of an appropriate command from the RPU. Specifically, to change information in the earpiece CIC default parameter storage 870, a user first activates the earpiece battery charging system, e.g., by placing the earpiece in a recharger/storage tray well known in the art. The RPU keyboard 946 is then used to enter a command to the DSP 948 that indicates the user's desire to change information in the default parameter storage 870, followed by the new information to be stored. The DSP 948 causes the RPU to transmit an interrogation with a reserved address code to which all earpieces being charged within the communication range of the RPU are receptive. The information that is to ultimately be loaded into the earpiece default parameter storage 870 is then transmitted by the RPU using the auxiliary bit field of many successive interrogations, said |

| Claims | Prior Art |
| --- | --- |
| | interrogations are received by the earpiece, and the desired information is loaded into the CIC default parameter storage 870 under control of the ASIC 845.<br><br>Anderson ’783 at 22:61–23:35<br>Details of normal system operation: During normal operation of the hearing aid with wireless remote processor, sounds from the ambient environment are picked up by a microphone 12 in the earpiece 10 and transmitted with other information (e.g., data representing the earpiece battery 860 voltage as obtained by an A/D 865 converter and transmitted under control of the earpiece ASIC 845 in the auxiliary bit of many successive replies via the reply data register 825) over a primary two-way wireless link 17 to the RPU 16, where the audio signals are enhanced according to the user's needs by the RPU DSP 948. Signal enhancement is achieved via any of a number of techniques well known in the art that use the capabilities of the general-purpose RPU DSP 948. The enhanced audio signals may be combined with other information (e.g., a synthesized voice, generated within the DSP 948, warning that the aforementioned earpiece battery voltage is low) and transmitted from the RPU 16 over the primary wireless link 17 to the earpiece 10, where they are converted by a speaker 15 to sounds that can only be heard by the user 11. Art auxiliary speaker can be supplied in the RPU 16 as a peripheral 950 device that allows people other than the user to hear the same sounds as those produced by the earpiece speaker 15, if desired (as, e.g., when a person other than the user wishes to use the system's optional cellular telephone capabilities). A different, optional secondary two-way wireless link (shown as part of the RPU in FIG. 9 as secondary wireless link circuitry 944, or connected to the RPU by a wired or other, e.g. infrared, wireless link 18 and shown as optional secondary wireless link circuitry 19 in FIG. 1) can be used for communication between the RPU and a cellular telephone system or other sources of information. An RPU keyboard suitable for covert data entry 72, or voice recognition capabilities in the RPU (implemented, e.g., using any of a number of techniques well known in the art that use the general-purpose RPU DSP 948), can be used to control hearing aid parameters (such as amplification level set by the RPU DSP 948) and telephone dialing functions (e.g., automatic dialing of a predefined telephone number using information stored in the RPU DSP 948) in a manner that can be made imperceptible to a casual observer if desired.<br><br>Anderson ’783 at 23:36–42<br>Binaural, directional noise-canceling hearing aid with hearing protection: Two earpieces (one in each ear) and an RPU can be used in a binaural, directional noise-canceling hearing aid system with hearing protection features. Such a system provides some measure of protection for the residual hearing capability of a hearing-impaired user simultaneous with the hearing aid function. |

| Claims | Prior Art |
| --- | --- |
| | Anderson ’783 at 25:29–30<br>The verbal commands are received as audio signals by the earpiece 10 and transmitted to the RPU 16.<br><br>Anderson ’783 at 26:54–65<br>Secondary link audio considerations: In some applications, a user may not wish to transmit signals from the ambient audio environment over the secondary wireless link. In such cases, an auxiliary earpiece microphone which favors the "bone conduction" path over the normal "air path" between the user's mouth and ear can be used. To save space, the auxiliary microphone may be housed in the same miniature case as the primary earpiece microphone. Alternatively, when two earpieces are used, unwanted ambient sources can be "nulled out" in the RPU DSP 948 by digital signal processing techniques well known in the art (e.g., the equivalent of speakerphone circuitry).<br><br>Anderson ’783 at 26:65–67<br>Note that such binaural signal processing techniques can also provide directivity and background noise cancellation for users<br><br>Anderson ’783 at 27:1–3<br>having total hearing loss in one ear and partial loss in the other ear, as discussed earlier in connection with binaural hearing aid system operation.<br><br>A POSITA would have understood that the primary and auxiliary microphones are configured for directional pickup based on the locations shown in FIG. 1, the disclosures above, and in view of the explicit teaching that the configuration provides directional noise cancellation.<br><br>To the extent that Anderson ’783 does not disclose any elements of this claim limitation, this limitation would have been known to a person having ordinary skill in the art at the time of the invention and/or rendered obvious in view of Nemirovski. For example, Nemirovski discloses an earset having an internal microphone and an external microphone. *See* Nemirovski at 9:46-50, FIG. 5. A POSITA would have combined Anderson’s earpiece with Nemirovski’s multiple microphone teachings to improve speech detection and noise cancellation, among the other reasons discussed in this chart. Nemirovski’s internal microphone is “directed towards the ear canal of the user and detects sounds emanating or coming out of the ear (or air pressure changes occurring within the ear) to accurately and reliably detect the speech of the user.” *See* Nemirovski at 3:15-18. The external microphone “generally points away from the person wearing the earset” and detects air pressure changes outside of the ear that result from “externally generated noise (other people’s speech, environmental |

| Claims | Prior Art |
| --- | --- |
| | noise, etc.)" as well as "the speech of the person wearing the earset." *See id.* at 9:53-58. Thus, in the combination, a first microphone (the internal microphone) picks up audio from a user and a second microphone (the external microphone) picks up audio generated outward away from the user.<br><br>A POSITA would have understood this array of microphones, as well as each of the individual microphones, to be configured for directional audio pickup based on their placement. Nemirovski teaches that the internal microphone is directed toward the ear canal to detect user-generated sounds while being shielded from external noise, whereas the external microphone is oriented away from the user to detect environmental sounds. *See* Nemirovski at 9:19-35. Although the microphones themselves may be omnidirectional, the microphones are *configured* for directional audio pickup by their positions relative to the ear and the apparatus. *See id.* at 3:34-36, 7:13-14, 9:43-44. For example, the internal microphone is "shielded from environmental noise" by the housing and the user's head, which directionally blocks external sound, while the external microphone directionally detects ambient sound outside the ear "[a]s a result" of its outward orientation. *See id.* at 7:8-14, 9:51-55.<br><br>To the extent that Anderson '783, alone or in view of Nemirovski, does not disclose any elements of this claim limitation, it would have been obvious to a person having ordinary skill in the art to combine, with the teachings of Anderson '783 and Nemirovski, those elements, as known to them or as disclosed by other prior art identified in the cover pleading. |
| 7. A personal audio system as recited in claim 6, wherein direction of the directional audio pickup is in front of the user. | Anderson '783 expressly or inherently discloses "[a] personal audio system as recited in claim 6, wherein direction of the directional audio pickup is in front of the user." The following citations show examples of where Anderson '783 discloses this limitation.<br><br>*See* above at claim 6.<br><br>A POSITA would have understood Anderson '783 to teach that the directional microphone array is configured to detect environmental audio signals, including those in front of the user; and additionally to detect the user's speech, emitted in front of the user by the user's own mouth. *See, e.g., id.* at 5:3-6; 6:8-15; 25:29-30.<br><br>To the extent that Anderson '783 does not disclose any elements of this claim limitation, this limitation would have been known to a person having ordinary skill in the art at the time of the invention and/or rendered obvious in view of Nemirovski, as in the combination described above for claim 6. For example, in that combination, Anderson's external microphone of the array is oriented away from the ear canal to directionally detect sounds in the external environment, including the user's voice, as described for claim 6[A]. *See* Anderson at 5:3-6, 6:8-15, 25:29-30. A POSITA would have understood this directional audio pickup to include a direction in front of the user. As Anderson discloses, and as the POSITA would have recognized, the pinnae (external cartilage) of |

| Claims | Prior Art |
| --- | --- |
| | the ear provide shielding from sources behind the user, such that sources in front of the user are unshielded and thus more strongly detected. *See* Anderson at 20:6-8. Though Anderson describes this shielding principle with respect to the earpiece's antenna, a POSITA would have understood that Anderson's microphone 12 (co-located in the ear with the antenna) is subject to analogous directional shielding of audio signals. *See* Anderson at 3:53-60, FIG. 1. This directionality is consistent with Anderson's detection of speech signals, including for the user's own speech, which are generally emitted in front of the user. *See id.* at 5:3-21.<br><br>To the extent that Anderson '783 does not disclose any elements of this claim limitation, it would have been obvious to a person having ordinary skill in the art to combine, with the teachings of Anderson '783, those elements, as known to them or as disclosed by other prior art identified in the cover pleading. |
| 8. A personal audio system as recited in claim 6, wherein direction of the directional audio pickup is outward from the user. | Anderson '783 expressly or inherently discloses "[a] personal audio system as recited in claim 6, wherein direction of the directional audio pickup is outward from the user," for example, as explained above for claim 6, because the external microphone is oriented outward to directionally detect sound outside the ear. *See* Anderson at 7:8-14 9:51-55. The following citations show examples of where Anderson '783 discloses this limitation.<br><br>*See* above at claim 6.<br><br>To the extent that Anderson '783 does not disclose any elements of this claim limitation, it would have been obvious to a person having ordinary skill in the art to combine, with the teachings of Anderson '783, those elements, as known to them or as disclosed by other prior art identified in the cover pleading. |
| 9. A personal audio system as recited in claim 1, wherein at least one of the earbuds in the pair of earbuds comprises a plurality of microphones configured for audio pickup. | Anderson '783, alone or in view of Nemirovski, expressly or inherently discloses "[a] personal audio system as recited in claim 1, wherein at least one of the earbuds in the pair of earbuds comprises a plurality of microphones configured for audio pickup," for example, as described above for claim 6. The following citations show examples of where Anderson '783 and Nemirovski disclose this limitation.<br><br>*See* above at claim 6.<br><br>To the extent that Anderson '783, alone or in view of Nemirovski, does not disclose any elements of this claim limitation, it would have been obvious to a person having ordinary skill in the art to combine, with the teachings of Anderson '783 and Nemirovski, those elements, as known to them or as disclosed by other prior art identified in the cover pleading. |
| 10[pre]. A personal audio system as recited in claim 9, wherein the plurality of microphones includes at least: | Anderson '783 expressly or inherently discloses "[a] personal audio system as recited in claim 9" having a "plurality of microphones," as described above for claim 6.<br><br>*See* above at claims 6 and 9. |

| Claims | Prior Art |
|---|---|
| | To the extent that Anderson ’783 does not disclose any elements of this claim limitation, it would have been obvious to a person having ordinary skill in the art to combine, with the teachings of Anderson ’783, those elements, as known to them or as disclosed by other prior art identified in the cover pleading. |
| [10a] a first microphone configured to receive audio pickup from the user; and | Anderson ’783 expressly or inherently discloses “a first microphone configured to receive audio pickup from the user” (e.g., the internal microphone), as explained above for claim 6. For example, Anderson ’783 discloses that the auxiliary earpiece microphone can “favor[] the ‘bone conduction’ path over the normal ‘air path’ between the user’s mouth and ear.” *See id.* at 26:57-59. A POSITA would have understood that a microphone for picking up sounds from a bone conduction path between a user’s mouth and ear would pick up sounds from the user.<br><br>*See* above at claim 6.<br><br>To the extent that Anderson ’783 does not disclose any elements of this claim limitation, it would have been obvious to a person having ordinary skill in the art to combine, with the teachings of Anderson ’783, those elements, as known to them or as disclosed by other prior art identified in the cover pleading. |
| [10b] a second microphone configured to receive audio pickup outward away from the user. | Anderson ’783 expressly or inherently discloses “a second microphone configured to receive audio pickup outward away from the user” (e.g., the external microphone), as explained above for claim 6.<br><br>*See* above at claim 6.<br><br>To the extent that Anderson ’783 does not disclose any elements of this claim limitation, it would have been obvious to a person having ordinary skill in the art to combine, with the teachings of Anderson ’783, those elements, as known to them or as disclosed by other prior art identified in the cover pleading. |
| 11. A personal audio system as recited in claim 10, wherein the audio pickup from at least the second microphone is used at least for noise cancelation. | Anderson ’783, alone or in view of Nemirovski ’379, expressly or inherently discloses “[a] personal audio system as recited in claim 10, wherein the audio pickup from at least the second microphone is used at least for noise cancelation.” For example, Anderson ’783 discloses that “[b]ackground noise and competing talker cancellation are achieved using any of a number of techniques and circuits well known in the art, e.g., variations of the Least Means Squares (LMS) technique.” *See id.* at 23:65-24:2.<br><br>*See* above at claim 10.<br><br>The following citations show examples of where Anderson ’783 discloses this limitation.<br><br>Anderson ’783 at 23:65–24:14<br>Background noise and competing talker cancellation are achieved using any of a number of techniques and circuits well known in the art, e.g., variations of the Least Mean Squares (LMS) technique as implemented in the Motorola DSP56200 LMS filter integrated circuit, or the equivalent function implemented in the general-purpose RPU DSP 948. Note that for all binaural signal processing functions, data contained in replies from |

| Claims | Prior Art |
|---|---|
| | the left earpiece (i.e., audio data from the left earpiece microphone) is processed in the RPU DSP 948 by combining said data with other data contained in replies from the right earpiece (i.e., audio data from the right earpiece microphone). The processed audio data transmitted from the RPU to the left and right earpiece speakers via RPU interrogations is therefore a function of data received from both the left and right earpiece microphones via earpiece replies.<br><br>To the extent that Anderson ’783 alone does not teach that the audio picked up from the second microphone is used for noise cancelation, this element is met by Anderson ’783 in combination with Nemirovski ’379. The following citations show examples of where Nemirovski ’379 discloses this limitation.<br><br>Nemirovski ’379 at FIG. 5<br> 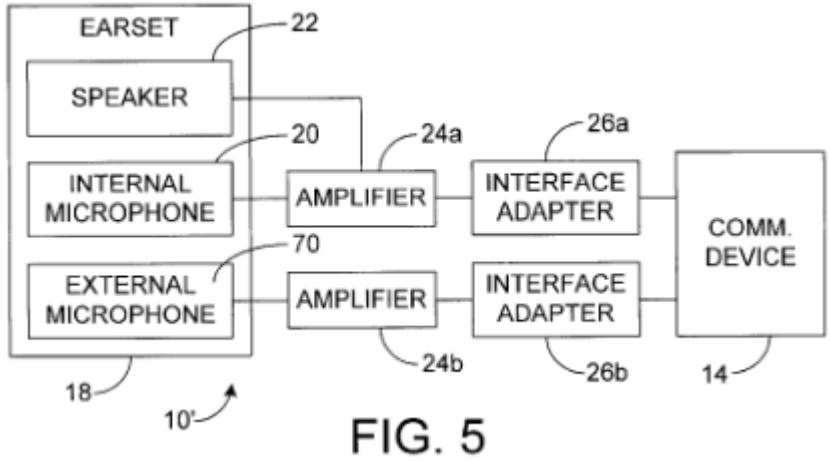 <br><br>FIG. 5<br><br>Nemirovski ’379 at 2:59–60<br>FIG. 5 is a block diagram of an ear microphone assembly according to another aspect of the invention; and<br><br>Nemirovski ’379 at 3:6–23<br>The present invention is directed to a communication system, including a communications device and an ear microphone, or earset, assembly. The communications system allows a user to speak with a remotely located person. The ear microphone assembly, also referred to herein as an earset, includes a microphone and a speaker supported by a housing. The housing is retained by the ear of the user and allows for hands free use of the communication system while carrying on a conversation with the remotely located person. The microphone is directed towards the ear canal of the user and detects sounds emanating or coming out of the |

| Claims | Prior Art |
| --- | --- |
| | ear (or air pressure changes occurring within the ear) to accurately and reliably detect the speech of the user. The position of the microphone may also help to reduce detection of externally generated sounds. The ear microphone assembly allows for separation of a speech input device for a cellular, or wireless, telephone from an RF transceiver of the telephone.<br><br>Nemirovski ’379 at 4:27–41<br>The communications system 10 includes an ear microphone assembly, or earset 18, having a microphone 20 and a speaker 22 supported by a housing 30 (FIG. 3). The physical arrangement of the earset 18 will be described in more detail below. The microphone 20 is used to detect sounds emanating or coming from the ear (sometimes referred to as air pressure changes within the ear) of the user that result from speech of the user. The microphone 20 converts those detections into an electrical signal. The electrical signal is optionally amplified by an amplifier 24. Next, the amplified electrical signal is received by the communication device 14 via an appropriate interface adapter 26. The interface adapter 26 can be, for example, a jack or other electrical connector received by a corresponding receptacle of the communication device 14.<br><br>Nemirovski ’379 at 9:33–39<br>The external microphone 70 is disposed on a exterior portion 72 of the housing 30 and is pointed away from the wearer of the earset 18 assembly. The external microphone 70 can be secured to the housing 30 with adhesive and can be disposed in a recess defined by the exterior portion 72. Similar to the internal microphone 20, the external microphone 70 is small (e.g., less than two mm in size).<br><br>Nemirovski ’379 at 9:45–60<br>FIG. 5 is a block diagram that illustrates a system 10′ for detecting speech of the user. The system 10′ includes the earset 18 having the internal microphone 20, the speaker 22 and amplifier 24a as described in greater detail above. In addition, the earset 18 of the system 10′ has the external microphone 70. As one skilled in the art will appreciate, the use of the external microphone 70 is optional. The external microphone 70 is disposed on the housing 30 (FIG. 3) and generally points away from the person wearing the earset 18. As a result, the external microphone 70 detects air pressure changes located outside the ear. These air pressure changes are mainly the result of externally generated noise (other people's speech, environmental noise, etc.) and, in part, to the speech of the person wearing the earset 18, when the speech travels from the mouth of the user and through the air to the external microphone 70. |

| Claims | Prior Art |
| --- | --- |
| | Nemirovski ’379 at 10:8–13<br>The unique signals generated by the internal and external microphone 20, 70 can be used to distinguish between user produced speech and externally produced sounds. In alternative configurations of the system 10′, the system 10′ can be adapted to cancel externally generated noise from the detections of the internal microphone 20.<br><br>Nemirovski ’379 at 10:14–26<br>When the user speaks both the internal microphone 20 and the external microphone 70 detects the speech. Sounds generated by a source other than the user (e.g., another person speaking, a passing vehicle, machinery, the hum of an air conditioner or computer, etc.) will be referred to herein as noise. Both the external microphone 70 and the internal microphone 20 detect the noise. Accordingly, the communication device 14 (or other processing circuit) can be programmed to isolate the user's speech by identifying (i.e., separating) the speech component and the noise component. As a result, a relatively noise-free speech signal can be produced which can be transmitted to the communication network 12 by the communication device 14.<br><br>Nemirovski ’379 at 10:27–47<br>In one embodiment, signal separation can be made by solving equations 1 and 2, identified below, for a sound component signal (“S”) and a noise component signal (“N”). An impulse response of the internal microphone ($F_{MI}$) and an impulse response of the external microphone ($F_{ME}$) reflect the sensitivity of the microphones, the frequency response of the microphones, resonating characteristics of the ear and housing, etc. $Y_I$ represents the overall signal produced by the internal microphone and $Y_E$ represents the overall signal produced by the external microphone. Assuming that the entire system is linear (the system features are additive and homogeneous), the system can be represented by equations 1 and 2 as follows (the asterisk, or “*”, represents a convolution operator):<br>[Equation]<br>$F_{ME}*S+F_{ME}*N=Y_E$ Eq. 2<br>By using the output signals $Y_I$ and $Y_E$ and the known impulse responses $F_{MI}$ and $F_{ME}$, the two equations can be solved in real time for the two unknown signals S and N.<br><br>As disclosed in the above–cited citations, Nemirovski ’379 discloses a first microphone for picking up audio from a user (the internal microphone), a second microphone for picking up audio generated outward away from the user (the external microphone), and that the audio is used for noise cancelation. A POSITA would thus have understood that the audio picked up by Nemirovski ’379’s second (external) microphone is used for noise cancelation. |

| Claims | Prior Art |
| --- | --- |
| | A POSITA would have been motivated to combine Anderson ’783 and Nemirovski ’379 to meet the claim limitations with a reasonable expectation of success. Anderson ’783 discloses that its hearing aid system can perform “background noise and competing talker cancellation…using any of a number of techniques and circuits well known in the art.” *See id.* at 23:65-24:1. Nemirovski ’379 discloses one such example of a known technique for producing “a relatively noise-free speech signal” that includes “cancel[ing] externally generated noise from the detections of the internal microphone.” *See id.* at 10:11-14, 24-25. It therefore would have been obvious to a POSITA to employ Nemirovski ’379’s noise cancellation techniques in Anderson ’783’s hearing aid system, which can employ “any of a number of techniques.” *See id.* at 23:65-24:1.<br><br>The features of Nemirovski’ 379’s earset would have been readily combinable with the hearing aid of Anderson ’783 by a POSITA with a reasonable expectation of success. Both systems disclose ear-worn devices for use with a communication system and can also include noise canceling functionality. Both devices also share other analogous and familiar computer components, such as microphones, speakers, and amplifiers. Accordingly, combining their respective teachings would involve combining known components to yield predictable results.<br><br>To the extent that Anderson ’783 and Nemirovski ’379 do not disclose any elements of this claim limitation, it would have been obvious to a person having ordinary skill in the art to combine, with the teachings of Anderson ’783, and Nemirovski ’379, those elements, as known to them or as disclosed by other prior art identified in the cover pleading. |
| 12. A personal audio system as recited in claim 11, wherein at least a portion of the audio pickup from the second microphone is subtracted from the audio pickup from the first microphone. | Anderson ’783 in view of Nemirovski ’379, as described above for claim 11, expressly or inherently disclose “[a] personal audio system as recited in claim 11, wherein at least a portion of the audio pickup from the second microphone is subtracted from the audio pickup from the first microphone.” For example, the disclosures of Nemirovski ’379 cited above for claim 11 teach that the external microphone audio picks up noise that is cancelled from the first microphone audio. *See, e.g., id.* at 10:12–13; 10:20–44; 9:55–57. A POSITA would have understood this cancellation process to teach that at least a portion of the audio picked up by the external microphone (the externally generated noise) is subtracted from the audio picked up by the internal microphone.<br><br>*See* above at claim 11.<br><br>For example, Nemirovski teaches “cancel[ing] externally generated noise from the detections of the internal microphone 20” to produce a “relatively noise-free speech signal.” *See* Nemirovski at 10:8-26, 10:48-58. For instance, in the below linear system, the internal and external microphone audio signals ($Y_I$ and $Y_E$, respectively) each include a sound component S (user speech) and a noise component N (ambient noise such as from passing vehicles and machinery) picked up by the microphones: |

| Claims | Prior Art |
| --- | --- |
| | $F_{MI} * S + F_{MI} * N = Y_I$ (Eq. 1)<br>$F_{ME} * S + F_{ME} * N = Y_E$ (Eq. 2)<br>*See id.*at 10:28-47.<br>The terms $F_{MI}$ and $F_{ME}$ represent the impulse responses of the internal and external microphones, respectively. (*see id.* at 10:30-34). The linear system is solved for the speech component S and the ambient noise component N, such that the noise component (*e.g.*, including a portion of the audio detected by the external microphone) can be subtracted from the microphone signals (*e.g.*, including audio detected by the internal microphone), thus isolating the speech component. *See id.* at 10:20-26.<br>A POSITA would have been motivated to combine the teachings of Anderson ’783 and Nemirovski ’379 to meet the claim limitations with a reasonable expectation of success for the reasons described above with respect to claim 11.<br>To the extent that Anderson ’783 in view of Nemirovski ’379 does not disclose any elements of this claim limitation, it would have been obvious to a person having ordinary skill in the art to combine, with the teachings of Anderson ’783 and Nemirovski ’379, those elements, as known to them or as disclosed by other prior art identified in the cover pleading. |
| 13. A personal audio system as recited in claim 12, wherein each of the ear buds includes at least a speaker and is configured to generate at least a portion of the customized audio output for the user via the speaker. | Anderson ’783 expressly or inherently disclose “[a] personal audio system as recited in claim 12, wherein each of the ear buds includes at least a speaker and is configured to generate at least a portion of the customized audio output for the user via the speaker.” For example, Anderson ’783 discloses that enhanced audio signals received from the RPU are transmitted to the earpiece, “where they are converted by a speaker 15 to sounds that can only be heard by the user 11.” *See id.* at 23:11-14. The following citations show examples of where Anderson ’783 discloses this limitation. |

| Claims | Prior Art |
| --- | --- |
| | Anderson ’783 at FIG. 1<br> 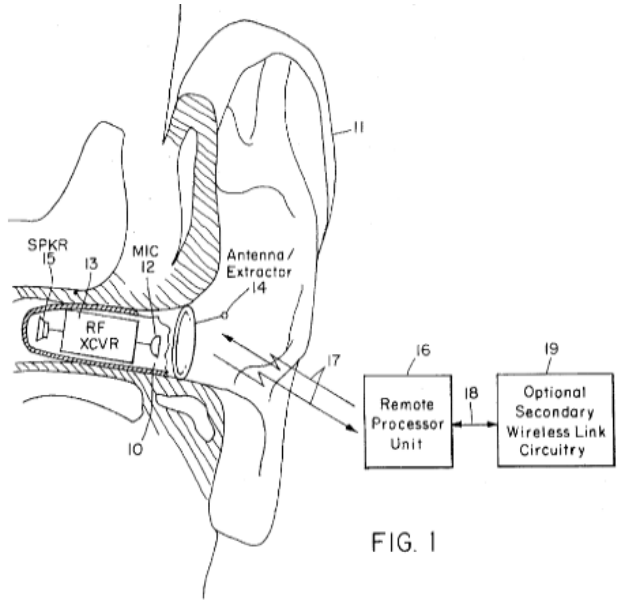 <br><br>FIG. 1<br><br>Anderson ’783 at 3:13–18<br>FIG. 1 is a block diagram system overview illustrating how an earpiece (comprising a microphone, RF transceiver, dual-use antenna/extractor and speaker) is worn in the ear, communicates via a primary two-way RF link with an RPU, and also communicates via an optional secondary wireless link to a telephone system.<br><br>Anderson ’783 at 3:52–4:14<br>One preferred embodiment of the invention herein described is shown in block diagram form in FIG. 1. In this figure, the earpiece 10 shown worn in the ear 11 uses a standard completely-in-the-canal (CIC) housing, well known in the art, although many other earpiece housing types known in the art (e.g., behind-the-ear, or BTE) can be used. The earpiece shown in FIG. 1 comprises a microphone 12, RF transceiver 13 with an antenna that doubles as an earpiece extractor 14, and speaker 15. Although the dual-use antenna/extractor arrangement shown in FIG. 1 is often desirable, a separate antenna or antennae can be used in conjunction with many different types of earpiece extractors as appropriate for a particular application. Antennae and extractors can be disguised as ear hair or jewelry (e.g., earrings), or conductive filaments can be permanently implanted in the ear cartilage to act as antennae using a process similar to ear piercing. The earpiece 10 communicates with a remote processor unit (RPU) 16 via a primary two-way RF link 17, although many |

| Claims | Prior Art |
|---|---|
| | other wireless link media (e.g., ultrasonic or infrared) may be used instead. The RPU is typically worn under clothing (e.g., carried in a pocket or purse), but may also be worn in plain sight (e.g., on a belt) if desired. The RPU 16 may be connected (via wired or wireless means 18) to optional secondary wireless link circuitry 19 that allows wireless communication between the RPU and other sources of information (e.g., the general subscriber telephone network) via a secondary wireless link. Note that the optional secondary wireless link circuitry 19 may or may not be contained within the RPU case 70 of FIG. 7.<br><br>Anderson ’783 at 4:30–33<br>Although the system described here is monaural, it will be clear to those skilled in the art that a binaural (stereo) system can be constructed based on the same principles as the monaural system.<br><br>Anderson ’783 at 22:11–61<br>Stand-alone earpiece operation: If an earpiece cannot communicate with an RPU for any reason, stand-alone earpiece operation as a CIC hearing aid is generally desirable. Examples include occasions where the RPU must be turned off by pushing the RPU power-off key 78 (e.g., situations where operation of wireless transmitters is prohibited such as aircraft takeoffs and classified military briefings), RPU battery or other RPU electronics failure, misplacement of an RPU, and primary wireless link 17 interference. Note that a microphone located in the earpiece 10 is preferred to a body-worn microphone, since only an earpiece microphone 12 can be used to provide the desired default CIC hearing aid function (earpiece microphones also provide superior audio localization capabilities as the microphone moves with the user's head, and provide reduced wind and clothing noise compared with body-worn microphones). Parameters that control the stand-alone earpiece operation are stored in the earpiece CIC default parameter storage 870, which is accessed by the ASIC 845 to implement the desired stand-alone functions as described earlier. CIC default parameters include, but are not limited to, settings for the nominal and maximum allowable earpiece volume. Other information contained in the default parameter storage 870 includes, but is not limited to, the communication address and L/R (left/right) selection bit. To ensure that the CIC default parameter storage information cannot be changed inadvertently, changes are only allowed when the earpiece is not in use as, for example, when the earpiece battery 860 is being charged. A battery charging detector 840, that is sensitive to the high-level magnetic induction fields commonly used for earpiece battery charging, indicates to the ASIC 845 that the default parameter storage 870 values may be changed upon receipt of an appropriate command from the RPU. Specifically, to change information in the earpiece CIC default parameter storage 870, a user first activates the earpiece battery charging system, e.g., by placing the earpiece in a recharger/storage tray well known in the art. The RPU keyboard 946 is then used to enter a command to the DSP 948 that indicates the user's desire to change information in the default parameter storage 870, followed |

| Claims | Prior Art |
|---|---|
| | by the new information to be stored. The DSP 948 causes the RPU to transmit an interrogation with a reserved address code to which all earpieces being charged within the communication range of the RPU are receptive. The information that is to ultimately be loaded into the earpiece default parameter storage 870 is then transmitted by the RPU using the auxiliary bit field of many successive interrogations, said interrogations are received by the earpiece, and the desired information is loaded into the CIC default parameter storage 870 under control of the ASIC 845.<br><br>Anderson ’783 at 22:61–23:35<br>Details of normal system operation: During normal operation of the hearing aid with wireless remote processor, sounds from the ambient environment are picked up by a microphone 12 in the earpiece 10 and transmitted with other information (e.g., data representing the earpiece battery 860 voltage as obtained by an A/D 865 converter and transmitted under control of the earpiece ASIC 845 in the auxiliary bit of many successive replies via the reply data register 825) over a primary two-way wireless link 17 to the RPU 16, where the audio signals are enhanced according to the user's needs by the RPU DSP 948. Signal enhancement is achieved via any of a number of techniques well known in the art that use the capabilities of the general-purpose RPU DSP 948. The enhanced audio signals may be combined with other information (e.g., a synthesized voice, generated within the DSP 948, warning that the aforementioned earpiece battery voltage is low) and transmitted from the RPU 16 over the primary wireless link 17 to the earpiece 10, where they are converted by a speaker 15 to sounds that can only be heard by the user 11. Art auxiliary speaker can be supplied in the RPU 16 as a peripheral 950 device that allows people other than the user to hear the same sounds as those produced by the earpiece speaker 15, if desired (as, e.g., when a person other than the user wishes to use the system's optional cellular telephone capabilities). A different, optional secondary two-way wireless link (shown as part of the RPU in FIG. 9 as secondary wireless link circuitry 944, or connected to the RPU by a wired or other, e.g. infrared, wireless link 18 and shown as optional secondary wireless link circuitry 19 in FIG. 1) can be used for communication between the RPU and a cellular telephone system or other sources of information. An RPU keyboard suitable for covert data entry 72, or voice recognition capabilities in the RPU (implemented, e.g., using any of a number of techniques well known in the art that use the general-purpose RPU DSP 948), can be used to control hearing aid parameters (such as amplification level set by the RPU DSP 948) and telephone dialing functions (e.g., automatic dialing of a predefined telephone number using information stored in the RPU DSP 948) in a manner that can be made imperceptible to a casual observer if desired. |

| Claims | Prior Art |
| --- | --- |
| | To the extent that Anderson ’783 does not disclose any elements of this claim limitation, it would have been obvious to a person having ordinary skill in the art to combine, with the teachings of Anderson ’783, those elements, as known to them or as disclosed by other prior art identified in the cover pleading. |
| 14. A personal audio system as recited in claim 1, wherein the mobile communication device is or includes a mobile phone. | Anderson ’783 expressly or inherently discloses “[a] personal audio system as recited in claim 1, wherein the mobile communication device is or includes a mobile phone,” for example, by disclosing that the RPU can access wireless links to telephone networks and be located near the user, thus making it both a phone and wireless. The following citations show examples of where Anderson ’783 discloses this limitation.<br><br>Anderson ’783 at 1:50–65<br>The present invention uses an audio path that is different from the audio path used by devices in the prior art. The present invention uses a primary two-way wireless link (not a one-way link as in the prior art) between an earpiece worn in or at the user's ear and an RPU worn by or located near the user. In the present invention, audio signals from the environment are picked up by a microphone in the earpiece (not a hand-held microphone as used by wireless hearing aids in the prior art) and transmitted over the primary two-way wireless link to the RPU (instead of going to processor electronics contained in the earpiece, as in basic hearing aids known in the prior art), where the audio signals are enhanced according to the user's needs before transmission over the primary wireless link to the earpiece. Signal processing is performed in the RPU rather than the earpiece to take advantage of relaxed size and power constraints.<br><br>Anderson ’783 at 2:40–59<br>Another object of this invention is to provide supplemental audio information (e.g. a verbal warning from the RPU that an earpiece battery is low) and communication services (e.g., cellular telephone and paging services) to the user via the hearing aid system. Such services are accessed in a manner that can be made imperceptible to a casual observer if desired. The RPU (which contains a digital signal processor or other computer) acts as one source of information, e.g., by using a synthesized voice message to provide the time of day, and the RPU can also be used to access a secondary wireless link to the general subscriber telephone network or voice paging services. User control of hearing aid parameters and requests for information are accomplished using pushbuttons located on the RPU (including pushbuttons suitable for data entry in a covert manner) or voice recognition. Many sensors and peripheral devices can reside in or be attached to the RPU by wired or wireless means, and can provide a variety of information for different applications (e.g., heart pulse rate) as audio in the user's earpiece.<br><br>Anderson ’783 at 24:47–66<br>Morse code keys 956 or voice recognition capabilities implemented using the RPU DSP 948) in a manner |

| Claims | Prior Art |
|---|---|
| | that can be made imperceptible to a casual observer if desired. In this respect, the system acts as a "virtual handset" communication aid that replaces a conventional telephone handset in many applications (although users may additionally communicate with a conventional handset or speakerphone in the usual fashion). To accomplish the virtual handset function, the RPU 16 is equipped with optional secondary two-way wireless link circuitry 19 to communicate with a telephone or other communication network. The secondary wireless link is separate from, and does not interfere with, the primary wireless link 17 between the earpiece 10 and RPU 16. In applications where relatively high-power transmissions take place on the secondary link and the secondary link transmitter is integrated into the RPU, the RPU can be placed on a user's wrist or ankle away from vital organs to reduce any potential health risk relative to conventional wireless handsets.<br><br>To the extent that Anderson ’783 does not disclose any elements of this claim limitation, it would have been obvious to a person having ordinary skill in the art to combine, with the teachings of Anderson ’783, those elements, as known to them or as disclosed by other prior art identified in the cover pleading. |
| 15. A personal audio system as recited in claim 1, wherein the customized audio output includes music. | Anderson ’783 expressly or inherently discloses “[a] personal audio system as recited in claim 1, wherein the customized audio output includes music.” The following citations show examples of where Anderson ’783 discloses this limitation.<br><br>Anderson ’783 at 1:50–65<br>The present invention uses an audio path that is different from the audio path used by devices in the prior art. The present invention uses a primary two-way wireless link (not a one-way link as in the prior art) between an earpiece worn in or at the user's ear and an RPU worn by or located near the user. In the present invention, audio signals from the environment are picked up by a microphone in the earpiece (not a hand-held microphone as used by wireless hearing aids in the prior art) and transmitted over the primary two-way wireless link to the RPU (instead of going to processor electronics contained in the earpiece, as in basic hearing aids known in the prior art), where the audio signals are enhanced according to the user's needs before transmission over the primary wireless link to the earpiece. Signal processing is performed in the RPU rather than the earpiece to take advantage of relaxed size and power constraints.<br><br>Anderson ’783 at 2:40–59<br>Another object of this invention is to provide supplemental audio information (e.g. a verbal warning from the RPU that an earpiece battery is low) and communication services (e.g., cellular telephone and paging services) to the user via the hearing aid system. Such services are accessed in a manner that can be made imperceptible to a casual observer if desired. The RPU (which contains a digital signal processor or other computer) acts as one source of information, e.g., by using a synthesized voice message to provide the time |

| Claims | Prior Art |
|---|---|
| | of day, and the RPU can also be used to access a secondary wireless link to the general subscriber telephone network or voice paging services. User control of hearing aid parameters and requests for information are accomplished using pushbuttons located on the RPU (including pushbuttons suitable for data entry in a covert manner) or voice recognition. Many sensors and peripheral devices can reside in or be attached to the RPU by wired or wireless means, and can provide a variety of information for different applications (e.g., heart pulse rate) as audio in the user's earpiece.<br><br>Anderson ’783 at 24:15–26<br>The invention provides useful unsolicited information (i.e., information automatically provided to the user by the system, not as a result of a user request for information) to the user of the system in a manner that can be made imperceptible to a casual observer if desired. Information about the status of the hearing aid system itself, such as a verbal warning that an earpiece or RPU battery voltage is low, is provided to the user as detailed earlier. Automatic measurements of heart pulse rate, body temperature and walking distance traveled can be taken by sensors 950 in the RPU 16 or earpiece 10 and stored in the RPU DSP 948.<br><br>Anderson ’783 at 24:26–32<br>Sensor measurements can be reported to the user by a voice synthesized in the RPU DSP 948 using any of a variety of synthesis techniques well known in the art, including playback of pre-recorded digitized speech. The voice signal produced within the RPU DSP 948 is then added to the processed audio signals already being sent from the RPU to the earpiece.<br><br>Anderson ’783 at 24:45–47<br>Solicited information: Solicited information is provided by the system (e.g., via the earpiece speaker 15) in response to user requests (e.g., via an RPU keyboard 946,<br><br>Anderson ’783 at 24:47–66<br>Morse code keys 956 or voice recognition capabilities implemented using the RPU DSP 948) in a manner that can be made imperceptible to a casual observer if desired. In this respect, the system acts as a "virtual handset" communication aid that replaces a conventional telephone handset in many applications (although users may additionally communicate with a conventional handset or speakerphone in the usual fashion). To accomplish the virtual handset function, the RPU 16 is equipped with optional secondary two-way wireless link circuitry 19 to communicate with a telephone or other communication network. The secondary wireless link is separate from, and does not interfere with, the primary wireless link 17 between the earpiece 10 and |

| Claims | Prior Art |
| --- | --- |
| | RPU 16. In applications where relatively high-power transmissions take place on the secondary link and the secondary link transmitter is integrated into the RPU, the RPU can be placed on a user's wrist or ankle away from vital organs to reduce any potential health risk relative to conventional wireless handsets.<br><br>Anderson ’783 at 25:50–26:5<br>Sensors and peripheral devices: Many sensors and peripheral devices 950 can reside in or be attached to the RPU by wired or wireless means, and controlled by the user (via inputs to the RPU DSP 948 through the keyboard 946, Morse code keys 956 or voice recognition) to provide both solicited and unsolicited information. Music can be provided from pre-stored information including tape, compact disc, over-the-telephone services via the secondary wireless link, or a commercial broadcast radio receiver. User location information can be provided to the RPU from special-purpose transmitters at specific locations in nursing home applications. Self-contained user-carried inertial navigation packages (with solid-state gyroscopes, accelerometers and a compass) or a Global Positioning System receiver can also be used. Sensors for a foot soldier RPU application may include many types of detectors such as RF detectors (e.g., radar detection capability), nuclear/biological/chemical weapon detectors, infrared or laser detectors and metal detectors. Appropriate verbal warnings or distinctive alerting tones generated by the RPU DSP 948 are sent from the RPU 16 to the earpiece 10 and ultimately received as audio signals by the user.<br><br>Anderson’s RPU can include a “peripheral device[]” to provide music (*e.g.*, from a compact disc) or other information to the user. *See* Anderson at 24:45-47, 25:51-59. As an example, a peripheral device can provide music from, *e.g.*, a compact disc. *See id.* at 25:51-59. The RPU combines the enhanced audio signals described for claim 1 with other audio information, which a POSITA would have understood to include the music, and transmits this customized audio output to the earpiece. *See id.* at 23:5-14.<br><br>To the extent that Anderson ’783 does not disclose any elements of this claim limitation, it would have been obvious to a person having ordinary skill in the art to combine, with the teachings of Anderson ’783, those elements, as known to them or as disclosed by other prior art identified in the cover pleading. |
| 16. A personal audio system as recited in claim 1, wherein the customized audio output includes a voice conversation. | Anderson ’783 expressly or inherently discloses “[a] personal audio system as recited in claim 1, wherein the customized audio output includes a voice conversation.” The following citations show examples of where Anderson ’783 discloses this limitation.<br><br>Anderson ’783 at 5:3–21<br>During normal operation, speech signals from a nearby talker (and other signals in the ambient audio environment) are picked up by the earpiece wireless microphone 20 and transmitted to the RPU FM receiver 24. The RPU FM receiver 24 output level may be adjusted using the RPU FM receiver 24 volume control. |

| Claims | Prior Art |
| --- | --- |
| | The resulting electrical waveform representing signals from the nearby talker travels through the DPDT switch 25, which is set to the lower position as shown in FIG. 2, to the signal enhancer 26. The signal enhancer 26 may be, for example, a voice changer device that varies the pitch of a received speech signal according to the setting of pushbutton controls located on the RPU signal enhancer 26. The speech signal's pitch can then be raised or lowered as desired to help compensate for a user's hearing loss relative to a particular talker's voice characteristics. The modified speech signal travels from the RPU signal enhancer 26 to the RPU FM transmitter 27, and finally to the earpiece headset 21 receiver where the signal is converted to acoustic waves heard by the user.<br><br>A POSITA would have understood the speech signals to include a voice conversation, *i.e.*, a conversation involving the nearby talker.<br><br>To the extent that Anderson ’783 does not disclose any elements of this claim limitation, it would have been obvious to a person having ordinary skill in the art to combine, with the teachings of Anderson ’783, those elements, as known to them or as disclosed by other prior art identified in the cover pleading. |
| [17a] A personal audio system as recited in claim 1, wherein at least one of the earbuds in the pair of earbuds comprises a plurality of microphones configured for audio pickup, | Anderson ’783 expressly or inherently discloses “[a] personal audio system as recited in claim 1, wherein at least one of the earbuds in the pair of earbuds comprises a plurality of microphones configured for audio pickup,” as described above for claim 6. *See* Anderson at 1:51-63, 22:62-23:5; 26:54-61.<br><br>*See* above at claim 6.<br><br>To the extent that Anderson ’783 does not disclose any elements of this claim limitation, it would have been obvious to a person having ordinary skill in the art to combine, with the teachings of Anderson ’783, those elements, as known to them or as disclosed by other prior art identified in the cover pleading. |
| [17b] wherein at least one of the microphones is configured to pick up an audio command, and | Anderson ’783 expressly or inherently discloses “wherein at least one of the microphones is configured to pick up an audio command.” The following citation shows an example of where Anderson ’783 discloses this limitation.<br><br>Anderson ’783 at 25:29–30<br>The verbal commands are received as audio signals by the earpiece 10 and transmitted to the RPU 16.<br><br>Anderson discloses that a user can provide voice commands, which are “received as audio signals by the earpiece 10 and transmitted to the RPU 16.” *See* Anderson at 25:15-30. A POSITA would have understood the audio signals to be picked up by the microphones, which are the components of the earpiece that receive audio signals. *See id.* at 5:3-6, 6:8-15, 22:62-23:5. |

| Claims | Prior Art |
| --- | --- |
| | A POSITA would have understood receiving verbal commands by an earpiece to include receiving the verbal commands by the microphone of the earpiece. To the extent that Anderson ’783 does not disclose any elements of this claim limitation, it would have been obvious to a person having ordinary skill in the art to combine, with the teachings of Anderson ’783, those elements, as known to them or as disclosed by other prior art identified in the cover pleading. |
| [17c] wherein the mobile communication device is configured to induce an operation or action based on the audio command. | Anderson ’783 or Seshadri expressly or inherently discloses “wherein the mobile communication device is configured to induce an operation or action based on the audio command.” The following citation shows an example of where Anderson ’783 discloses this limitation.<br><br>Anderson ’783 at 25:15–27<br>To obtain solicited information, user requests are processed in a variety of means well known in the art, including inputs via one or more pushbuttons on the RPU and voice recognition computer programs implemented in the RPU electronics. Voice recognition can be used almost exclusively, if desired, thereby eliminating nearly all RPU pushbutton controls. Voice commands recognized by the RPU can cause the RPU to initiate actions such as changing hearing aid parameter settings (e.g., volume), or activate appliances and environmental controls (e.g., aids for the physically handicapped) in a distributed wireless network via the secondary wireless link.<br><br>Anderson ’783 at 25:27–29<br>RPU circuitry may also enable a user to voice-dial a desired telephone number by speaking certain pre-defined commands.<br><br>Seshadri ’839 at [0042]<br>Input module 128, which may be a keypad, touch screen, voice recognition circuit, or other like user interfaces, receives user commands and produces digital command messages 124 there from. Such digital command messages 124 includes, but are not limited to, packet size, synchronization information, frequency hopping initiation information, timeslot allocation information, link establishment information, piconet address information, fast-forward, play, pause, volume adjust, record, stop and rewind.<br><br>Seshadri ’839 at [0047]<br>Detachable ear-piece 156 and microphone 154 may have on-chip operations to support call conferencing, call waiting, flash, and other features associated with telephones. These functions may me accessed and reviewed by a user interface 158 and display 160 within host device 152 or a user interface and display |

| Claims | Prior Art |
|---|---|
| | located on either detachable ear-piece 156 or microphone 154. The user interface and display, located on either the host device or detachable ear-piece 156 and microphone 154 may have a display and button(s) that may be used to program device, perform directory functions including selecting number to call, view caller ID, initiate call waiting, or initiate call conferencing. Additionally, circuitry within the ear-piece 156 and microphone 154 may enable voice activated dialing. The actual voice recognition could be performed within ear-piece 156, microphone 154, or host device 152. Thus, ear-piece 156 and microphone 154 may act to initiate calls and receive calls.<br><br>Anderson ’783 thus discloses that the RPU can recognize voice commands, which cause action initiation, such as changing hearing aid parameter settings (e.g., volume), or activating appliances or environmental controls in a distributed wireless network. *See* Anderson at 25:22-27. To the extent Anderson does not disclose the details by which a voice command may be induced, a POSITA would have been motivated to look to the teachings of Seshadri—all of which were conventional—with a reasonable expectation of success since both Anderson and Sheshadri disclose ear devices configured to be used with mobile devices with a wide range of functionalities.<br><br>To the extent that Anderson ’783 does not disclose any elements of this claim limitation, it would have been obvious to a person having ordinary skill in the art to combine, with the teachings of Anderson ’783, those elements, as known to them or as disclosed by other prior art identified in the cover pleading. |
| 18. A personal audio system as recited in claim 1, wherein the customized audio output signals are produced based on amplifying or attenuating different frequency bands differently according to at least the stored hearing profile. | Anderson ’783 expressly or inherently discloses “[a] personal audio system as recited in claim 1, wherein the customized audio output signals are produced based on amplifying or attenuating different frequency bands differently according to at least the stored hearing profile,” as described above for claim 1. *See, e.g. id.* at 27:4–17. A POSITA would have understood that using gain vs. frequency parameters to enhance signals includes attenuating different frequency bands differently in accordance with the results of the user’s hearing test.<br><br>*See* above at claims [1b], [1d].<br><br>To the extent that Anderson ’783 does not disclose any elements of this claim limitation, it would have been obvious to a person having ordinary skill in the art to combine, with the teachings of Anderson ’783, those elements, as known to them or as disclosed by other prior art identified in the cover pleading. |
| 19. A personal audio system as recited in claim 1, wherein the hearing profile associated with the user is self-determined by the user. | Anderson ’783 expressly or inherently discloses “[a] personal audio system as recited in claim 1, wherein the hearing profile associated with the user is self-determined by the user,” for example, by disclosing that the hearing test an be performed by the earpiece worn by the user.<br><br>*See* above at claim [3].<br><br>The following citation shows an example of where Anderson ’783 discloses this limitation. |

| Claims | Prior Art |
|---|---|
| | Anderson ’783 at 27:4–24<br>Hearing test: The present invention allows hearing tests to be performed via the earpiece normally worn by the user, without the need for additional expensive test equipment. All signal generation capabilities necessary to perform hearing tests are available in the hearing aid system comprising an earpiece 10 and RPU 16. Specifically, the RPU DSP 948 can be used to generate tones of varying frequencies and amplitudes, as well as other signals known to be useful for hearing test purposes (e.g., nonsense syllables) that are converted to acoustic waves by the earpiece. Such tones are used to perform a hearing test that determines appropriate gain vs. frequency parameters for a program stored in the RPU DSP 948 that performs signal enhancement to compensate for the user's hearing loss. Note that the hearing test program that controls the RPU DSP 948 during the hearing test can be temporarily stored in the RPU DSP 948 for the duration of the test, then deleted upon completion of the test to allow re-use of RPU DSP 948 memory resources during normal operation. The hearing test program may be loaded into the RPU DSP 948 through the secondary wireless link 944 or a wired peripheral link 950.<br><br>*See also* Anderson at 23:11-14.<br><br>A POSITA would have understood based on these disclosures that a hearing profile can be self-determined by a user of the hearing aid system via the RPU and that the hearing test relied on the user’s own indications of audio tone detection. For example, a POSITA would understand that the user, as the person who can hear the test’s audio playback, self-determines the hearing profile by providing the responses that result in the profile’s gain vs. frequency parameters. Additionally, as described for claim 3, a POSITA would have understood Anderson’s hearing test to rely on the user’s own indications of audio tone detection.<br><br>To the extent that Anderson ’783 does not disclose any elements of this claim limitation, it would have been obvious to a person having ordinary skill in the art to combine, with the teachings of Anderson ’783, those elements, as known to them or as disclosed by other prior art identified in the cover pleading. |
| 20[pre]. A personal audio system as recited in claim 1, | Anderson ’783 expressly or inherently discloses “[a] personal audio system as recited in claim 1” at least for the reasons discussed above for claim 1.<br><br>*See* above at claim 1[pre].<br><br>To the extent that Anderson ’783 does not disclose any elements of this claim limitation, it would have been obvious to a person having ordinary skill in the art to combine, with the teachings of Anderson ’783, those elements, as known to them or as disclosed by other prior art identified in the cover pleading. |

| Claims | Prior Art |
| --- | --- |
| [20a] wherein the mobile communication device includes computing capabilities and a storage device, the storage device storing at least a software program executed by the mobile communication device to enable the user to establish the hearing profile associated with the user, and | Anderson ’783, alone or in view of Eaton ’458, expressly or inherently discloses “wherein the mobile communication device includes computing capabilities and a storage device, the storage device storing at least a software program executed by the mobile communication device to enable the user to establish the hearing profile associated with the user.” For example, Anderson ’783 discloses that the RPU includes a computer and a program that enhances signals to compensate for a user’s hearing loss.<br><br>*See* above at claim 1[b].<br><br>The following citations show an example of where Anderson ’783 discloses this limitation.<br><br>Anderson ’783 at 1:50–65<br>The present invention uses an audio path that is different from the audio path used by devices in the prior art. The present invention uses a primary two-way wireless link (not a one-way link as in the prior art) between an earpiece worn in or at the user's ear and an RPU worn by or located near the user. In the present invention, audio signals from the environment are picked up by a microphone in the earpiece (not a hand-held microphone as used by wireless hearing aids in the prior art) and transmitted over the primary two-way wireless link to the RPU (instead of going to processor electronics contained in the earpiece, as in basic hearing aids known in the prior art), where the audio signals are enhanced according to the user's needs before transmission over the primary wireless link to the earpiece. Signal processing is performed in the RPU rather than the earpiece to take advantage of relaxed size and power constraints.<br><br>Anderson ’783 at 2:40–59<br>Another object of this invention is to provide supplemental audio information (e.g. a verbal warning from the RPU that an earpiece battery is low) and communication services (e.g., cellular telephone and paging services) to the user via the hearing aid system. Such services are accessed in a manner that can be made imperceptible to a casual observer if desired. The RPU (which contains a digital signal processor or other computer) acts as one source of information, e.g., by using a synthesized voice message to provide the time of day, and the RPU can also be used to access a secondary wireless link to the general subscriber telephone network or voice paging services. User control of hearing aid parameters and requests for information are accomplished using pushbuttons located on the RPU (including pushbuttons suitable for data entry in a covert manner) or voice recognition. Many sensors and peripheral devices can reside in or be attached to the RPU by wired or wireless means, and can provide a variety of information for different applications (e.g., heart pulse rate) as audio in the user's earpiece.<br><br>Anderson ’783 at 24:47–66<br>Morse code keys 956 or voice recognition capabilities implemented using the RPU DSP 948) in a manner |

| Claims | Prior Art |
| --- | --- |
| | that can be made imperceptible to a casual observer if desired. In this respect, the system acts as a "virtual handset" communication aid that replaces a conventional telephone handset in many applications (although users may additionally communicate with a conventional handset or speakerphone in the usual fashion). To accomplish the virtual handset function, the RPU 16 is equipped with optional secondary two-way wireless link circuitry 19 to communicate with a telephone or other communication network. The secondary wireless link is separate from, and does not interfere with, the primary wireless link 17 between the earpiece 10 and RPU 16. In applications where relatively high-power transmissions take place on the secondary link and the secondary link transmitter is integrated into the RPU, the RPU can be placed on a user's wrist or ankle away from vital organs to reduce any potential health risk relative to conventional wireless handsets.<br><br>Anderson ’783 at 27:4–24<br>Hearing test: The present invention allows hearing tests to be performed via the earpiece normally worn by the user, without the need for additional expensive test equipment. All signal generation capabilities necessary to perform hearing tests are available in the hearing aid system comprising an earpiece 10 and RPU 16. Specifically, the RPU DSP 948 can be used to generate tones of varying frequencies and amplitudes, as well as other signals known to be useful for hearing test purposes (e.g., nonsense syllables) that are converted to acoustic waves by the earpiece. Such tones are used to perform a hearing test that determines appropriate gain vs. frequency parameters for a program stored in the RPU DSP 948 that performs signal enhancement to compensate for the user's hearing loss. Note that the hearing test program that controls the RPU DSP 948 during the hearing test can be temporarily stored in the RPU DSP 948 for the duration of the test, then deleted upon completion of the test to allow re-use of RPU DSP 948 memory resources during normal operation. The hearing test program may be loaded into the RPU DSP 948 through the secondary wireless link 944 or a wired peripheral link 950.<br><br>To the extent that Anderson ’783 is found not to disclose some or all of this limitation, Eaton ’458 explicitly discloses a mobile device adapted to program a hearing aid system (*see, e.g.*, FIG. 6) and fit a patient with the system by executing software that sends audio test signals for a patient response:<br><br>Eaton ’458 at 6:29–7:6<br>The hearing aid system 102 can communicate with a device 106 facilitated by the short-range network 104. In various embodiments, the device 106 includes a mobile device or a terminal. The term “mobile device” means the inclusion of a digital cellular telephone, a personal digital assistant, a personal communication and information device. Furthermore, the term “mobile device” means the inclusion of a handheld device. The term “terminal” means the inclusion of a data terminal. The term “personal digital assistant” means the inclusion of a portable personal-computing device. The term “personal communication and information |

| Claims | Prior Art |
|---|---|
| | device" means the inclusion of a device capable of mobile communication as well as being capable of functioning as a personal digital assistant.<br><br>Eaton '458 at 11:6–15<br>Figure 6 is a pictorial diagram illustrating a system in accordance with one embodiment. Figure 6 contains elements similar to those discussed in Figure 1. For these elements, the aforementioned discussion related to them is incorporated here in full. The system 600 includes hearing aid systems $602_A$ and $602_B$. The hearing aid system $602_A$ comprises a programming module $602_{A1}$ and a hearing aid device $602_{A0}$. The hearing aid system $602_B$ comprises the hearing aid device $602_{B0}$. Whereas a mobile device 606 communicates with the hearing aid device $602_{A0}$ of the hearing aid system $602_A$ through the programming module $602_{A1}$, the mobile device 606 communicates directly with the hearing aid device $602_{B0}$ of the hearing aid system $602_B$.<br><br>Eaton '458 at 11:16–28<br>For illustrative purposes only, suppose a patient is being fitted with the hearing aid system $602_B$. During the fitting process, a piece of software may be executed on the mobile device 606 to interact with the patient wearing the hearing aid system $602_B$. Such interaction includes sending audio test signals from the software executing on the mobile device 606 to the hearing aid system $602_B$. Such software includes a user interface. The aural response from the patient is either automatically sent back to the testing software by the hearing aid system $602_B$ or is recorded manually into the testing software through the mobile device 606. Once sufficient aural responses are collected, in one embodiment, such aural responses are sent to a programming fitting server 616 through the cellular/mobile network 610 and the Internet 614; in another embodiment, such aural responses are formatted to form an audiogram before sending the information to the programming fitting server 616.<br><br>Eaton '458 at 11:28–30<br>The term audiogram means the inclusion of profiling from the aural responses so as to obtain the extent of the hearing loss of the patient.<br><br>A POSITA would have been motivated to combine Anderson '783 and Eaton '458 to meet the claim limitations with a reasonable expectation of success. A POSITA would be motivated to combine Anderson '783 and Eaton '458 because Anderson '783 discloses a hearing test for determining signal enhancement parameters for a hearing aid, and Eaton '458 discloses a specific technique for performing such a test using interactive software in order to fit a user with a hearing aid. Anderson '783 discloses that the hearing test can be performed using a |

| Claims | Prior Art |
| --- | --- |
| | hearing test program (i.e., software) stored in the RPU. Thus, Anderson ’783 lends itself to combination with Eaton ’458’s teaching of a specific software program that could be stored in the RPU to perform the hearing test.<br><br>Eaton ’458’s hearing aid fitting software would have been readily combinable with Anderson ’783’s hearing aid system by the POSITA with a reasonable expectation of success because the hearing aid systems of Anderson ’783 and Eaton ’458 share multiple similarities. For example, both Anderson ’783 and Eaton ’458 disclose hearing aid systems for use with a wireless communication system. Both systems also share analogous and familiar computer components, such as earn-worn hearing aid devices that can be wirelessly connected to a mobile communication device. Accordingly, combining the teachings of Anderson ’783 and Eaton ’458 would involve combining known components to yield predictable results.<br><br>To the extent that Anderson ’783, alone or in view of Eaton ’458, does not disclose any elements of this claim limitation, it would have been obvious to a person having ordinary skill in the art to combine, with the teachings of Anderson ’783, alone or in view of Eaton ’458, those elements, as known to them or as disclosed by other prior art identified in the cover pleading. |
| [20b] wherein the mobile communication device is configured to establish the hearing profile associated with the user via the software program executed by the mobile communication device based on the user interacting with the software program via the mobile communication device. | Anderson ’783, alone or in view of Eaton ’458, expressly or inherently discloses “wherein the mobile communication device is configured to establish the hearing profile associated with the user via the software program executed by the mobile communication device based on the user interacting with the software program via the mobile communication device.” For example, the disclosures cited above for element [20a] describe how Anderson ’783 uses the RPU to perform the hearing test described above. As explained for claim 3, a POSITA would have understood the hearing test to include user interaction with the program. Additionally, Eaton ’458 discloses a hearing aid system configured to communicate with a mobile device (e.g., a cell phone, a personal digital assistant, or a personal communication and information device) and software that facilitates the fitting of the hearing aid to the patient, as described above for element [20a]. Eaton also teaches that the user interacts with the hearing test program to profile the extent of the user’s hearing loss. *See* Eaton at 11:17-31. A POSITA would have been motivated to combine Anderson ’783 and Eaton ’458 to meet the claim limitations at least for the reasons set forth above for element [20a].<br><br>*See* above at claim [20a].<br><br>To the extent that Anderson ’783 in view of Eaton ’458 does not disclose any elements of this claim limitation, it would have been obvious to a person having ordinary skill in the art to combine, with the teachings of Anderson ’783 in view of Eaton ’458, those elements, as known to them or as disclosed by other prior art identified in the cover pleading. |
| 21. A personal audio system as recited in claim 20, wherein | Anderson ’783 in view of Eaton ’458, expressly or inherently discloses “[a] personal audio system as recited in claim 20, wherein the software program at least interactively guides the user to establish the hearing profile for |

| Claims | Prior Art |
| --- | --- |
| the software program at least interactively guides the user to establish the hearing profile for the user. | the user." For example, Eaton '458 discloses that the software executed on the mobile device "interact[s] with the patient wearing the hearing aid system," where "[s]uch interaction includes sending audio test signals from the software executing on the mobile device 606 to the hearing aid system" and receiving aural responses from the patient. *See id.* at 11:16-33. The aural responses are then formatted into an audiogram that includes "profiling from the aural responses so as to obtain the extent of the hearing loss of the patient." *See id.* at 11:27-30. The hearing test results are used to establish the user's hearing profile as described for claim 1[B]. *See* Eaton at 27:4-24. A POSITA would have been motivated to combine the teachings of Anderson '783 and Eaton '458 to meet the claim limitations with a reasonable expectation of success for the reasons described above with respect to claim 20<br><br>*See* above at claims [20a], [20b].<br><br>To the extent that Anderson '783 in view of Eaton '458 does not disclose any elements of this claim limitation, it would have been obvious to a person having ordinary skill in the art to combine, with the teachings of Anderson '783 in view of Eaton '458, those elements, as known to them or as disclosed by other prior art identified in the cover pleading. |
| 22. A personal audio system as recited in claim 21, wherein the software program at least interactively guides the user to establish the hearing profile for the user by at least causing various audio tones to be output to the user via at least one of the earbuds, prompting the user to provide a hearing input with respect to one or more of the various audio tones being output, and receiving the hearing user input pertaining to one or more of the various audio tones being output. | Anderson '783 in view of Eaton '458 expressly or inherently discloses "[a] personal audio system as recited in claim 21, wherein the software program at least interactively guides the user to establish the hearing profile for the user by at least causing various audio tones to be output to the user via at least one of the earbuds, prompting the user to provide a hearing input with respect to one or more of the various audio tones being output, and receiving the hearing user input pertaining to one or more of the various audio tones being output." The citations provided above for claim 3 discuss Anderson '783's example disclosures with respect to the hearing test.<br><br>*See* above at claims 3, 21.<br><br>As described for element [20b], a POSITA would have understood a "hearing test" to include receiving a user input pertaining to one or more of the various audio tones being output. To the extent that Anderson '783 alone does not teach that a software program interactively guides the user to establish the hearing profile, this limitation is met by Anderson '783 in combination with Eaton '458. For example, Eaton '458 discloses that the software executed on the mobile device "interact[s] with the patient wearing the hearing aid system" by "sending audio test signals from the software executing on the mobile device 606 to the hearing aid system" and receiving aural responses from the patient. *See id.* at 11:17-24. A POSITA would have been motivated to combine the teachings of Anderson '783 and Eaton '458 to meet the claim limitations with a reasonable expectation of success for the reasons described above with respect to claim 20.<br><br>Anderson's hearing test program generates tones of varying frequencies and amplitudes that are converted to acoustic waves by the earpiece, as previously described. In the combination of Anderson and Eaton, as |

| Claims | Prior Art |
| --- | --- |
| | described for claim 21[A], the program guides the user to interactively respond to the tones, *i.e.*, via aural input, to establish the hearing profile.<br><br>To the extent that Anderson ’783 in view of Eaton ’458 does not disclose any elements of this claim limitation, it would have been obvious to a person having ordinary skill in the art to combine, with the teachings of Anderson ’783 in view of Eaton ’458, those elements, as known to them or as disclosed by other prior art identified in the cover pleading. |
| [23a] A personal audio system as recited in claim 1, wherein at least one of the earbuds in the pair of earbuds comprises a radiation detector configured to capture radiation data; and | Anderson ’783, alone or in view of Abreu or Irvin ’332 or Luo ’446, expressly or inherently discloses “[a] personal audio system as recited in claim 1, wherein at least one of the earbuds in the pair of earbuds comprises a radiation detector configured to capture radiation data.” For example, Anderson ’783 discloses that “automatic measurements of heart pulse rate, body temperature and walking distance traveled can be taken by sensors 950 in the RPU 16 or earpiece 10.” *See id.* at 24:23-25. The following citation shows an example of where Anderson ’783 discloses this limitation.<br><br>Anderson ’783 at 24:15–26<br>The invention provides useful unsolicited information (i.e., information automatically provided to the user by the system, not as a result of a user request for information) to the user of the system in a manner that can be made imperceptible to a casual observer if desired. Information about the status of the hearing aid system itself, such as a verbal warning that an earpiece or RPU battery voltage is low, is provided to the user as detailed earlier. Automatic measurements of heart pulse rate, body temperature and walking distance traveled can be taken by sensors 950 in the RPU 16 or earpiece 10 and stored in the RPU DSP 948.<br><br>A POSITA would have understood a sensor for measuring body temperature to be a radiation detector for capturing thermal radiation data.<br><br>The following citations show examples of where Abreu ’960 discloses this limitation.<br><br>Abreu ’960 at 6:28–38<br>Head-mounted structures are structures mounted on the head or neck for positioning sensors on the end of the tunnel and include head bands with accessories that are adjacent to the tunnel, visors, helmets, headphone, structures wrapping around the ear and the like. For the purpose of this description TempAlert is referred herein as a system that measures temperature in the BTT area and has means to report the measured value and that can incorporate alarm means that are activated when certain levels are reached. Support structures yet include any article that has sensing means in which said sensing means are positioned at the |

| Claims | Prior Art |
| --- | --- |
| | end of the tunnel.<br><br>Abreu ’960 at 10:49–55<br>The apparatus of the invention include a temperature sensor located in the medial canthal pad. For temperature measurement the sensing system is located on a skin area that includes the medial canthal corner of the eye and upper eyelid. The sensor in the medial canthal pad is preferably positioned on the skin adjacent to the medial canthal area (medial corner of the eye).<br><br>Abreu ’960 at 32:29–45<br>In accordance with this exemplary embodiment for temperature measurement, the thermal energy emitted by the BTT is sensed by the temperature sensor 102 such as a miniature thermistor which produces a signal representing the thermal energy sensed. The signal is then converted to digital information and processed by processor 106 using standard processing for determining the temperature.<br><br>The following citations show examples of where Irvin ’332 discloses this limitation. For example, Irvin discloses that its proximity sensor 220 can be an “active or passive [infrared] sensor,” which a POSITA would have understood to include a detector for detecting capturing infrared radiation data (*i.e.*, an amount of infrared radiation detected by the infrared sensor). *See* Irvin at 6:22-24. A POSITA would have combined Irvin’s proximity sensor 220 with Anderson’s in-ear earpiece, such that the earpiece includes the proximity sensor.<br>Irvin ’332 at 6:3–33<br>FIG. 4C illustrates the power control circuit 210 coupled with a contact switch functioning as the sensor 220. The contact switch includes a first and second contact connected to the power control circuit 210, and connecting member 222 actuated when the user places the wireless headset 100 on their body. When actuated, the connecting member 222 places the first and second contacts of sensor 220 in electrical connection. Ideally, the sensor 220, when configured as a contact sensor, is placed in the earpiece 130, in the retaining member 140, or in the retaining pad 150 shown in FIG. 1B. Preferably, when sensor 220 is configured as a contact-based proximity sensor, the contacting element of sensor 220 is sealed in a manner that minimizes contaminant ingress. In some embodiments, the contact sensor may be actuated by the user resiliently expanding the retaining member 140 or other element of the wireless headset 100 for mounting upon their body.<br>FIG. 4D illustrates the power control circuit 210 coupled with a proximity sensor 220 not based on mechanical actuation. The proximity sensor 220 may be an active or passive IR sensor, may be a resistive or |

| Claims | Prior Art |
| --- | --- |
| | other type of thermal sensor, or may be an acoustic sensor. As a proximity sensor, sensor 220 provides indication that a user has placed the wireless headset 100 upon their body. As such, any of the foregoing or other presence sensing techniques may be used to implement sensor 220. Preferably, when configured as a proximity sensor, sensor 220 requires minimal power and provides a sensor output signal based on proximity to the user's body. Depending upon the sensing technology chosen, the control circuit 210 may be required to periodically stimulate sensor 220 to generate a detection response.<br><br>The following citation shows examples of where Luo ’446 discloses this limitation.<br><br>Luo ’446 at [0036]<br><br>The invention generally relies on shining light having a particular wavelength on human skin as well as the reflectance properties of human skin. The surface reflection of the human skin occurs at the surface of the epidermis and is approximately independent of the lighting wavelength and independent of human race. In the infrared (IR) range the wavelengths that can be used are greater than 800 nano-meters and the surface reflectance of human skin is more or less constant and close to 50%. The same hold true for orange and red light in the visible light range, namely wavelengths between approximately 600 and 800 nano-meters can be used, although the surface reflectance for darker skin is reduced for shorter wavelengths. Surface reflectance for dark skin is approximately 25% at 700 nano-meters. In the embodiments shown herein, the energy of choice in the sensor unit 18 is preferably infrared (IR) energy. However, long wavelength visible light energy can also be used as discussed below.<br><br>A POSITA would have been motivated to combine the teachings of Anderson with Abreu or Luo or Irvin to meet the claim limitations with a reasonable expectation of success for the reasons. For example, each of Anderson, Abreu, Luo and Irvin disclose audio devices worn in and/or on a user’s head, and it would have been obvious to the POSITA to incorporate other types of sensors into the device as well. Given that Anderson discloses audio devices worn both in and on a user’s head with various sensors for measuring different types of data, the POSITA would have looked to Abreu or Luo or Irvin for different types of sensors that could be incorporated into Anderson’s system. Moreover, a POSITA would have understood that sending a signal if the earpiece is no longer being worn by a user would necessarily include processing the data from the sensor to make that determination. Further, a POSITA would have understood that the sensor would fail to capture signals in a proper manner if the earbud were not being worn. Accordingly, the modified Anderson system could determine whether its earbud are being worn based on at least the sensor data. Further, a POSITA would have been motivated to modify Anderson to include this feature to conserve battery use, as if the earbud or headset is not being worn, the device can switch to a low power mode and minimize power usage. Moreover, the devices |

| Claims | Prior Art |
| --- | --- |
| | of the Anderson ’783, Abreu, Luo, and Irvin share various structural and functional similarities that render the inventions readily combinable. Accordingly, combining the teachings of Anderson ’783 and Abreu or Luo or Irvin would involve combining known components to yield predictable results.<br><br>To the extent that Anderson ’783, alone or in view of Abreu, Luo or Irvin, does not disclose any elements of this claim limitation, it would have been obvious to a person having ordinary skill in the art to combine, with the teachings of Anderson ’783 , those elements, as known to them or as disclosed by other prior art identified in the cover pleading. |
| [23b] first electronic circuitry electrically connected to the radiation detector, the first electronic circuitry configured to process at least the radiation data captured by the radiation detector, | Anderson ’783 in view of Abreu ’960 or Irvin ’332 or Luo ’446 expressly or inherently discloses “first electronic circuitry electrically connected to the radiation detector, the first electronic circuitry configured to process at least the radiation data captured by the radiation detector.” The following citation shows an example of where Anderson ’783 discloses this limitation.<br><br>Anderson ’783 at 12:47–13:22<br>Remote processor unit interrogator and reply processor: The RPU, shown in FIG. 9, may use any of a wide variety of components well known in the art. The DSP 948 may contain several integrated circuits, e.g., the Motorola DSP56L002 single-chip digital signal processor, a Motorola DSP56200 cascadable-adaptive digital filter chip and supporting memory devices well known in the art. Miniature components such as dielectric resonance oscillators are available for the microwave oscillator 908, and the DPSK replies can be decoded using surface acoustic wave (SAW) or glass bulk acoustic wave (BAW) delay lines 936 in a standard delay-and-multiply demodulator circuit 934. An alternative demodulator that achieves superior noise immunity can be implemented using a phase-locked loop in a squaring loop configuration for carrier recovery instead of delay-and-multiply circuitry 934. Decoding of a DPSK waveform using such coherent detection techniques is known in the art as differentially encoded coherent phase shift keying, or DECPSK. Amplifiers using low noise pseudomorphic high electron mobility transistors (e.g., the HP ATF-36077) may be used as needed (e.g., between the circulator 906 and routing switch 922), and such amplifiers are not individually identified in FIG. 9. All switches shown in FIG. 9 are RF switches that can be implemented using, e.g., PIN diodes. Switch control connections from the DSP 948 to the RF switches are shown in FIG. 9 for clarity, and all switches remain set as shown until changed as noted. The system shown in FIG. 9 demodulates a received reply when the RF reply travels through a selected antenna 900, antenna selection switch 902, circulator 906, routing switch 922 (set to the position opposite that shown in FIG. 9 during the reply interval by DSP 948 via control signal 976), bandpass filter 928 and IF mixer 930. The IF mixer 930 downconverts the reply by mixing it with a small amount of RF power from the 5760 MHz oscillator 908 via switch 910 (which is set to the position opposite that shown in FIG. 9 during the reply interval by DSP 948 via control signal 972) and power splitter 920. The resulting DPSK reply has a center frequency of 60 MHz, a bandwidth of 100 MHz, |

| Claims | Prior Art |
| --- | --- |
| | and is passed through the bandpass filter 932 to the DPSK demodulator 934 which, in this example, consists of a 50 nsec delay line 936 and multiplier 938. The resulting bits are stored in the reply data register 940 for processing by the DSP 948.<br><br>Anderson ’783 at 24:15–26<br>The invention provides useful unsolicited information (i.e., information automatically provided to the user by the system, not as a result of a user request for information) to the user of the system in a manner that can be made imperceptible to a casual observer if desired. Information about the status of the hearing aid system itself, such as a verbal warning that an earpiece or RPU battery voltage is low, is provided to the user as detailed earlier. Automatic measurements of heart pulse rate, body temperature and walking distance traveled can be taken by sensors 950 in the RPU 16 or earpiece 10 and stored in the RPU DSP 948.<br><br>Anderson ’783 at 24:26–32<br>Sensor measurements can be reported to the user by a voice synthesized in the RPU DSP 948 using any of a variety of synthesis techniques well known in the art, including playback of pre-recorded digitized speech. The voice signal produced within the RPU DSP 948 is then added to the processed audio signals already being sent from the RPU to the earpiece.<br><br>A POSITA would have understood that the RPU DSP processes the sensor measurements to produce an audible signal related to the measurements and the circuitry of the RPU DSP to be electrically connected to the sensor in order for the circuitry to process the radiation data collected by the sensor. To the extent that Anderson ’783 alone does not explicitly teach that electronic circuitry electrically connected to the radiation detector processes radiation data captured by the radiation detector, this limitation is met by Anderson ’783 in view of Abreu ’960. The following citations show an example of where Abreu ’960 discloses this limitation.<br><br>Abreu ’960 at 6:28–38<br>Head-mounted structures are structures mounted on the head or neck for positioning sensors on the end of the tunnel and include head bands with accessories that are adjacent to the tunnel, visors, helmets, headphone, structures wrapping around the ear and the like. For the purpose of this description TempAlert is referred herein as a system that measures temperature in the BTT area and has means to report the measured value and that can incorporate alarm means that are activated when certain levels are reached. Support structures yet include any article that has sensing means in which said sensing means are positioned at the end of the tunnel. |

| Claims | Prior Art |
| --- | --- |
| | Abreu ’960 at 10:49–55<br>The apparatus of the invention include a temperature sensor located in the medial canthal pad. For temperature measurement the sensing system is located on a skin area that includes the medial canthal corner of the eye and upper eyelid. The sensor in the medial canthal pad is preferably positioned on the skin adjacent to the medial canthal area (medial corner of the eye).<br><br>Abreu ’960 at 15:57–60<br>The eyeglasses can be incorporated with a detecting system to send a signal if the eyeglasses were removed or if the temperature sensor is not capturing signals in a proper manner.<br><br>Abreu ’960 at 18:56–59<br>The present invention preferably includes all functions in a miniature semiconductor chip, which as an integrated circuit, incorporates sensor, processing and transmitting units and control circuits.<br><br>Abreu ’960 at 32:29–45<br>In accordance with this exemplary embodiment for temperature measurement, the thermal energy emitted by the BTT is sensed by the temperature sensor 102 such as a miniature thermistor which produces a signal representing the thermal energy sensed. The signal is then converted to digital information and processed by processor 106 using standard processing for determining the temperature.<br><br>Abreu ’960 thus discloses an embodiment in which “[t]he eyeglasses can be incorporated with a detecting system to send a signal if the eyeglasses were removed or if the temperature sensor is not capturing signals in a proper manner.” *See id.* at 15:57-60. A POSITA would have understood that the “detecting system” is necessarily electrically connected to the temperature sensor in order to be able to send signals if the temperature sensor is not capturing signals in a proper manner.<br><br>Abreu ’960 further discloses that “[t]he present invention preferably includes all functions in a miniature semiconductor chip, which as an integrated circuit, incorporates sensor, processing and transmitting units and control circuits.” *See id.* at 18:56-59. Thus, a POSITA would have understood the “detecting system” incorporated into the eyeglasses to include electronic circuitry for processing data captured by the temperature sensor.<br><br>The following citation shows an example of where Irvin ’332 discloses this limitation. For example, Irvin teaches that electronic circuitry processes data received from sensor 220 (*e.g.*, an infrared proximity sensor indicating the distance to the user’s head) to enable or disable the headset’s electronic circuitry based on whether |

| Claims | Prior Art |
| --- | --- |
| | the headset is being worn. *See* Irvin at 4:3-10, 4:39-49, 6:20-33; FIG. 4D. A communications circuit 230 transitions to an active state 620 after the sensor 220 indicates a stimulus (*e.g.*, infrared radiation data indicating that the device is worn); and transitions to an inactive state 610 or a sleep state 720 after the indication is no longer provided. *See id.* at 8:11-9:39, FIG. 6, FIG. 7. A POSITA would have understood that in the combination, the electronic circuitry would electrically connect to the sensor, to receive the sensor's electrical signals; and would be implemented by Anderson's earpiece (*e.g.*, ASIC 845) and/or RPU (*e.g.*, DSP 645), at least because Anderson discloses these components as configured to interface with sensors. *See id.* at 24:23-26.<br><br>Irvin '332 at 6:3–33<br>FIG. 4C illustrates the power control circuit 210 coupled with a contact switch functioning as the sensor 220. The contact switch includes a first and second contact connected to the power control circuit 210, and connecting member 222 actuated when the user places the wireless headset 100 on their body. When actuated, the connecting member 222 places the first and second contacts of sensor 220 in electrical connection. Ideally, the sensor 220, when configured as a contact sensor, is placed in the earpiece 130, in the retaining member 140, or in the retaining pad 150 shown in FIG. 1B. Preferably, when sensor 220 is configured as a contact-based proximity sensor, the contacting element of sensor 220 is sealed in a manner that minimizes contaminant ingress. In some embodiments, the contact sensor may be actuated by the user resiliently expanding the retaining member 140 or other element of the wireless headset 100 for mounting upon their body.<br>FIG. 4D illustrates the power control circuit 210 coupled with a proximity sensor 220 not based on mechanical actuation. The proximity sensor 220 may be an active or passive IR sensor, may be a resistive or other type of thermal sensor, or may be an acoustic sensor. As a proximity sensor, sensor 220 provides indication that a user has placed the wireless headset 100 upon their body. As such, any of the foregoing or other presence sensing techniques may be used to implement sensor 220. Preferably, when configured as a proximity sensor, sensor 220 requires minimal power and provides a sensor output signal based on proximity to the user's body. Depending upon the sensing technology chosen, the control circuit 210 may be required to periodically stimulate sensor 220 to generate a detection response.<br><br>The following citations show an example of where Luo '446 discloses this limitation.<br><br>Luo '446 at [0034]<br>In general, the location sensor module 18 and the hearing aid module 24 communicate via a bi-directional information signal 42. The hearing aid module 24 polls the location sensor module 18 via the bi-directional signal 42, on preferably a periodic basis, to determine whether the hearing aid 10 is in the ear of the hearing aid user. In this case, the bi-directional signal 42 acts as a polling signal. In response to polling done via the |

| Claims | Prior Art |
| --- | --- |
| | bi-directional information signal 42, the location sensor module 18 probes the outer environment of the hearing aid 10 and returns location information via the bi-directional location signal 42. In this case, the bi-directional signal 42 acts as a location information signal. If the location information indicates that the hearing aid 10 is in the ear of the hearing aid user (i.e. the in-the-ear case), the hearing aid 10 operates in full-function mode. If the location information indicates that the hearing aid 10 is not in the ear of the hearing aid user (i.e. the out-of-the-ear case), the hearing aid 10 operates in sleep mode. In sleep mode, the hearing aid 10 can essentially be considered to be off.<br><br>Luo ’446 at [0035]<br><br>There are several general scenarios for the location of the hearing aid. In the first scenario, the hearing aid 10 is not in the ear of the user and the hearing aid 10 and is in sleep mode. In this case, the location sensor module 18 is polled and the location information indicates that the hearing aid 10 is not in the ear of the hearing aid user and the hearing aid 10 continues to operate in sleep mode. In the second scenario, the hearing aid 10 has just been inserted into the ear of the hearing aid user and the hearing aid 10 was previously in sleep mode. In this case, the location sensor module 18 is polled and the location information indicates that the hearing aid 10 is in the ear of the hearing aid user. The hearing aid 10 then moves into full-function mode. In the third scenario, the hearing aid 10 is in full-function mode and is being taken out of the ear of the hearing aid user. The location sensor module 18 is polled and the location information indicates that the hearing aid 10 is no longer in the ear of the hearing aid user. The hearing aid 10 then moves into sleep mode.<br><br>A POSITA would have been motivated to combine the teachings of Anderson ’783 and Abreu ’960 or Irvin ’332 or Luo ’446 to meet the claim limitations with a reasonable expectation of success, for the reasons discussed above. In addition, Anderson ’783 discloses that various sensors can be included in an earpiece or headset, such as sensors that measure heart pulse rate, body temperature, and walking distance traveled. It would have been obvious to a POSITA to incorporate other types of sensors into the earpiece or headset as well. A POSITA would have looked to Abreu ’960 or Irvin ’332 or Luo ’446, which, like Anderson ’783, discloses a device worn in or on a user’s head with sensors for measuring data. Given these structural and functional similarities between the two prior art systems, a POSITA would have a reasonable expectation of success in combining their teachings.<br><br>To the extent that Anderson ’783 in view of Abreu ’960 or Irvin ’332 or Luo ’446, does not disclose any elements of this claim limitation, it would have been obvious to a person having ordinary skill in the art to combine, with the teachings of Anderson ’783 and Abreu ’960, those elements, as known to them or as disclosed by other prior art identified in the cover pleading. |

| Claims | Prior Art |
| --- | --- |
| [23c] wherein the first electronic circuitry is configured to determine whether the earbud is being worn by a user based on at least the processed radiation data. | Anderson ’783 in view of Abreu ’960 or Irvin ’332 or Luo ’446 expressly or inherently discloses “wherein the first electronic circuitry is configured to determine whether the earbud is being worn by a user based on at least the processed radiation data.”<br><br>*See* above at claim [23b].<br><br>For example, Abreu ’960 discloses detection of signals to determine if the glasses are removed. The following citations show an example of where Abreu ’960 discloses this limitation.<br><br>Abreu ’960 at 15:57–60<br>The eyeglasses can be incorporated with a detecting system to send a signal if the eyeglasses were removed or if the temperature sensor is not capturing signals in a proper manner.<br><br>Abreu ’960 at 18:56–59<br>The present invention preferably includes all functions in a miniature semiconductor chip, which as an integrated circuit, incorporates sensor, processing and transmitting units and control circuits.<br><br>Abreu ’960 at 44:61–67<br>The present invention includes means for directing preferably near-infrared energy into the surface of the skin at the end of the BTE tunnel, means for analyzing and converting the reflectance or back scattered spectrun into the concentration of the substance measured and support means for positioning the light source and detector means adjacent to the surface of the skin at the BTE tunnel site.<br><br>A POSITA would have understood that sending a signal if the eyeglasses were removed or if the temperature sensor is not functioning properly would necessarily include processing the thermal radiation data from the temperature sensor to make that determination. Further, a POSITA would have understood that the temperature sensor would fail to capture signals in a proper manner if the eyeglasses were not being worn. Accordingly, Abreu ’960’s detecting system could determine whether the eyeglasses are being worn based on at least the processed thermal radiation data.<br><br>The following citations show an example of where Irvin ’332 discloses this limitation. *See also* above at claim element [22b]. |

| Claims | Prior Art |
| --- | --- |
| | Irvin ’332 at 2:20–34<br>The wireless headset serves as a communication accessory to a base unit, such as a cellular telephone. When not in use, the wireless headset reverts to an inactive state and draws essentially no power. A power control circuit imparts automatic enabling capability to the wireless headset. Preferably, the power control circuit employs a sensor responsive to a natural stimulus associated with a person preparing to use the wireless headset. The wireless headset may sense motion, physical orientation, or user proximity. Sensing techniques include but are not limited to micro-electro-mechanical-systems (MEMS), mercury switches, attitude switches, and IR or acoustic proximity sensors. In some embodiments, the wireless headset transitions from the inactive state to an active state in response to a user picking it up or mounting the wireless headset upon their head.<br><br>Irvin ’332 at 6:3–33<br>FIG. 4C illustrates the power control circuit 210 coupled with a contact switch functioning as the sensor 220. The contact switch includes a first and second contact connected to the power control circuit 210, and connecting member 222 actuated when the user places the wireless headset 100 on their body. When actuated, the connecting member 222 places the first and second contacts of sensor 220 in electrical connection. Ideally, the sensor 220, when configured as a contact sensor, is placed in the earpiece 130, in the retaining member 140, or in the retaining pad 150 shown in FIG. 1B. Preferably, when sensor 220 is configured as a contact-based proximity sensor, the contacting element of sensor 220 is sealed in a manner that minimizes contaminant ingress. In some embodiments, the contact sensor may be actuated by the user resiliently expanding the retaining member 140 or other element of the wireless headset 100 for mounting upon their body.<br>FIG. 4D illustrates the power control circuit 210 coupled with a proximity sensor 220 not based on mechanical actuation. The proximity sensor 220 may be an active or passive IR sensor, may be a resistive or other type of thermal sensor, or may be an acoustic sensor. As a proximity sensor, sensor 220 provides indication that a user has placed the wireless headset 100 upon their body. As such, any of the foregoing or other presence sensing techniques may be used to implement sensor 220. Preferably, when configured as a proximity sensor, sensor 220 requires minimal power and provides a sensor output signal based on proximity to the user's body. Depending upon the sensing technology chosen, the control circuit 210 may be required to periodically stimulate sensor 220 to generate a detection response.<br>Irvin ’332 at 8:11–22<br>FIGS. 6 and 7 illustrate operation of the wireless headset 100. FIG. 6 is a state diagram for one exemplary embodiment of the present invention. When the wireless headset 100 is not in use, it automatically enters an |

| Claims | Prior Art |
| --- | --- |
| | inactive state (610). As explained, this inactive state may constitute disconnecting the communications circuit 230 from the power source 240, or may simply represent placing the communications circuit 230 in a non-functional, low-power condition. Absent user stimulus, such as motion of the wireless headset 100 or placement of the wireless headset 100 upon the user's body, the wireless headset 100 remains in the inactive state (610).<br><br>The following citations show an example of where Luo ’446 discloses this limitation.<br><br>Luo ’446 at [0034]<br>In general, the location sensor module 18 and the hearing aid module 24 communicate via a bi-directional information signal 42. The hearing aid module 24 polls the location sensor module 18 via the bi-directional signal 42, on preferably a periodic basis, to determine whether the hearing aid 10 is in the ear of the hearing aid user. In this case, the bi-directional signal 42 acts as a polling signal. In response to polling done via the bi-directional information signal 42, the location sensor module 18 probes the outer environment of the hearing aid 10 and returns location information via the bi-directional location signal 42. In this case, the bi-directional signal 42 acts as a location information signal. If the location information indicates that the hearing aid 10 is in the ear of the hearing aid user (i.e. the in-the-ear case), the hearing aid 10 operates in full-function mode. If the location information indicates that the hearing aid 10 is not in the ear of the hearing aid user (i.e. the out-of-the-ear case), the hearing aid 10 operates in sleep mode. In sleep mode, the hearing aid 10 can essentially be considered to be off.<br><br>Luo ’446 at [0035]<br>There are several general scenarios for the location of the hearing aid. In the first scenario, the hearing aid 10 is not in the ear of the user and the hearing aid 10 and is in sleep mode. In this case, the location sensor module 18 is polled and the location information indicates that the hearing aid 10 is not in the ear of the hearing aid user and the hearing aid 10 continues to operate in sleep mode. In the second scenario, the hearing aid 10 has just been inserted into the ear of the hearing aid user and the hearing aid 10 was previously in sleep mode. In this case, the location sensor module 18 is polled and the location information indicates that the hearing aid 10 is in the ear of the hearing aid user. The hearing aid 10 then moves into full-function mode. In the third scenario, the hearing aid 10 is in full-function mode and is being taken out of the ear of the hearing aid user. The location sensor module 18 is polled and the location information indicates that the hearing aid 10 is no longer in the ear of the hearing aid user. The hearing aid 10 then moves into sleep mode. |

| Claims | Prior Art |
| --- | --- |
| | Luo ’446 at [0036]<br>The invention generally relies on shining light having a particular wavelength on human skin as well as the reflectance properties of human skin. The surface reflection of the human skin occurs at the surface of the epidermis and is approximately independent of the lighting wavelength and independent of human race. In the infrared (IR) range the wavelengths that can be used are greater than 800 nano-meters and the surface reflectance of human skin is more or less constant and close to 50%. The same hold true for orange and red light in the visible light range, namely wavelengths between approximately 600 and 800 nano-meters can be used, although the surface reflectance for darker skin is reduced for shorter wavelengths. Surface reflectance for dark skin is approximately 25% at 700 nano-meters. In the embodiments shown herein, the energy of choice in the sensor unit 18 is preferably infrared (IR) energy. However, long wavelength visible light energy can also be used as discussed below.<br><br>A POSITA would have been motivated to combine the teachings of Anderson and Abreu or Lu or Irvin to meet the claim limitations with a reasonable expectation of success for the reasons described above with respect to claim [23a] and [23b].<br><br>To the extent that Anderson ’783 and Abreu ’960 or Irvin ’332 or Luo ’446, do not disclose any elements of this claim limitation, it would have been obvious to a person having ordinary skill in the art to combine, with the teachings of Anderson ’783 and Abreu ’960, those elements, as known to them or as disclosed by other prior art identified in the cover pleading. |
| 24[pre]. A personal audio system operable to at least generate customized audio output, comprising: | Anderson ’783 expressly or inherently discloses “[a] personal audio system operable to at least generate customized audio output” for the reasons set forth above for element [1pre].<br><br>*See* above at claim 1[pre].<br><br>To the extent that Anderson ’783 does not disclose any elements of this claim limitation, it would have been obvious to a person having ordinary skill in the art to combine, with the teachings of Anderson ’783, those elements, as known to them or as disclosed by other prior art identified in the cover pleading. |
| [24a] a head-worn wearable electronic device including at least a pair of speakers, each of the speakers being configured to be wearable proximate to an ear of a user; and | Anderson ’783 expressly or inherently discloses “a head-worn wearable electronic device including at least a pair of speakers, each of the speakers being configured to be wearable proximate to an ear of a user,” for example, for the reasons explained above for element [1a].<br><br>*See* above at claim [1a]. |

| Claims | Prior Art |
| --- | --- |
| | Moreover, Anderson '783 discloses that the earpiece of a hearing aid includes a speaker, and can be worn "completely-in-the-canal" of the ear, as shown in FIG. 1 or behind the ear, or formed from a headset 21. *See id.* at 3:52-60; 4:15-39; 5:52-55; FIG. 1; FIG. 2. The speaker is thus wearable proximate to the ear of the user.<br><br>In some embodiments, such as shown in FIG. 2, the earpiece belongs to a head-worn headset 21. *See* Anderson at 4:15-39; FIG. 2.<br><br> 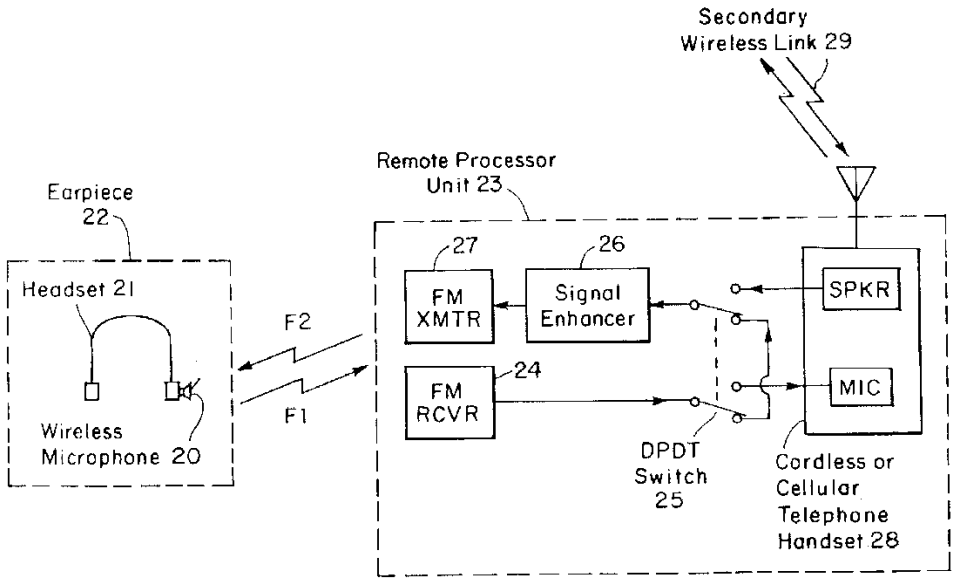 <br><br>FIG. 2<br><br>The headset earpiece 22 shown in FIG. 2 is "functionally similar" to the in-ear earpiece 10 shown in FIG. 1. *See* Anderson at 4:33-35. In a disclosed embodiment, "[a]n FM wireless microphone 20 transmitter, e.g. Radio Shack (R) model 33-1076, is mounted on an FM headset 21 receiver, e.g. Radio Shack (R) model 12-103, to form an earpiece 22 which is not necessarily hidden from view." *See id.* at 4:33-39. A POSITA would understand such Radio Shack models to include a headset that is "head-worn." The illustrated headset 21, as well as the referenced commercially available models, include a headband that rests on the top of the user's head for support. |

| Claims | Prior Art |
| --- | --- |
| | A POSITA would have understood from these disclosures that Anderson's headset 21 can include a pair of speakers, one for each ear, as shown above; with each speaker wearable near (and thus proximate to) its respective ear, *i.e.*, when the headset is worn.<br><br>Anderson illustrates headset 21 and earpiece 22 within the context of a "limited-feature embodiment," shown in FIG. 2. *See id.* at 4:15-29. However, a POSITA would have understood headset 21 and earpiece 22 to be combinable with the "full-featured" embodiment of FIG. 1. *See id.* at 3:52-58. This is because Anderson characterizes FIG. 1 and FIG. 2 as showing two preferred embodiments of the same invention; explains that the headset earpiece shown in FIG. 2 is "functionally similar" to the in-ear earpiece 10 of FIG. 1; and further explains that "many other earpiece housing types" can be used in place of the CIC earpiece housing shown in FIG. 1. *See id.* at 3:52-58, 4:15-35. A POSITA would have understood from these disclosures that the FIG. 1 system could be flexibly implemented using various housings for the earpiece, including headset 21.<br><br>A POSITA would have been motivated to use the headset instead of the CIC housing to realize advantages in cost, simplicity, and commercial availability described by Anderson. Even using headset 21 in a full-featured application, it would provide certain advantages over the in-ear embodiment. Unlike some CIC housings, the headset did not need to be customized to fit in a user's ear canal. Additionally, there would have been comfort benefits: many users do not like supporting objects with their ears, a problem addressed by replacing a CIC housing with a headset. And using a larger headset rather than a small in-ear device would make it easier and less expensive to include the processing and communication capabilities of the full-featured application, and would reduce the likelihood of misplacing the device. Anderson provides specific guidance for adapting the headset using "techniques [that] are well known in the art," and notes that schematics and service manuals for the headset were readily available, demonstrating that the POSITA would have had a reasonable expectation of success in making the combination. *See* Anderson at 4:26-5:60.<br><br>Because the POSITA would have combined headset 21 and its earpiece 22 with the full-featured FIG. 1 embodiment, throughout these invalidity contentions for the '693 and '355 patents, unless otherwise noted, references to the earpiece 10 shown for FIG. 1 should be understood to apply equally to earpiece 22 and headset 21.<br><br>The "head-worn wearable electronic device" is "eyewear or headwear" and thus encompasses an article worn over the user's head in the manner shown in Fig. 2. In addition, it would have been obvious to a POSITA to make the in-ear earpiece of Anderson into a head–worn device, e.g., to disguise the earpiece and/or to reduce the number of components a user needs to wear for different purposes, and in particular in view of the well known nature of head–worn wearable electronic devices at the time of the invention. |

| Claims | Prior Art |
| --- | --- |
| | In addition, as noted above, Anderson ’783 discloses that “it will be clear to those skilled in the art that a binaural (stereo) system can be constructed based on the same principles as the monaural system.” *See id.* at 4:30-33. A POSITA would thus have understood the disclosure to encompass a pair of earbuds with a pair of speakers, one for each ear.<br><br>To the extent that Anderson ’783 does not disclose any elements of this claim limitation, it would have been obvious to a person having ordinary skill in the art to combine, with the teachings of Anderson ’783, those elements, as known to them or as disclosed by other prior art identified in the cover pleading. |
| [24b] a mobile communication device at least for supporting audio output, the mobile communication device configured to store at least a hearing profile associated with the user, the stored hearing profile associated with the user at least characterizes hearing impairment regarding the user's ability to hear, | Anderson ’783 expressly or inherently discloses “a mobile communication device at least for supporting audio output, the mobile communication device configured to store at least a hearing profile associated with the user, the stored hearing profile associated with the user at least characterizes hearing impairment regarding the user's ability to hear,” for the reasons set forth above for element [1b].<br><br>*See* above at claim [1b].<br><br>To the extent that Anderson ’783 does not disclose any elements of this claim limitation, it would have been obvious to a person having ordinary skill in the art to combine, with the teachings of Anderson ’783, those elements, as known to them or as disclosed by other prior art identified in the cover pleading. |
| [24c] the mobile communication device configured to produce audio output signals customized for the user based on at least the stored hearing profile associated with the user such that the customized audio output signals at least compensate for the hearing impairment regarding the user's ability to hear, | Anderson ’783 expressly or inherently discloses “the mobile communication device configured to produce audio output signals customized for the user based on at least the stored hearing profile associated with the user such that the customized audio output signals at least compensate for the hearing impairment regarding the user's ability to hear,” for the reasons set forth above for element [1c].<br><br>*See* above at claim [1c].<br><br>To the extent that Anderson ’783 does not disclose any elements of this claim limitation, it would have been obvious to a person having ordinary skill in the art to combine, with the teachings of Anderson ’783, those elements, as known to them or as disclosed by other prior art identified in the cover pleading. |

| Claims | Prior Art |
|---|---|
| [24d] the mobile communication device configured to produce the customized audio output signals using at least signal amplification, | Anderson ’783 expressly or inherently discloses “the mobile communication device configured to produce the customized audio output signals using at least signal amplification,” for the reasons set forth above for element [1d].<br><br>*See* above at claim [1d].<br><br>To the extent that Anderson ’783 does not disclose any elements of this claim limitation, it would have been obvious to a person having ordinary skill in the art to combine, with the teachings of Anderson ’783, those elements, as known to them or as disclosed by other prior art identified in the cover pleading. |
| [24e] and the mobile communication device configured to transmit the customized audio output signals to the pair of speakers, | Anderson ’783 expressly or inherently discloses “the mobile communication device configured to transmit the customized audio output signals to the pair of speakers,” for the reasons set forth above for element [1e].<br><br>*See* above at claim [1e].<br><br>In addition, Anderson ’783 discloses that enhanced audio signals are “transmitted from the RPU 16 over the primary wireless link 17 to the earpiece 10, where they are converted by a speaker 15 to sounds that can only be heard by the user 11,” and, thus, that the customized audio signals ae transmitted to the speakers. *See id.* at 23:8-1. Similarly, for two-earpiece (stereo) embodiments, the audio signals are “transmitted from the RPU to the left and right earpiece speakers” for presentation to the user. *See* Anderson at 4:30-33, 24:10-14.<br><br>To the extent that Anderson ’783 does not disclose any elements of this claim limitation, it would have been obvious to a person having ordinary skill in the art to combine, with the teachings of Anderson ’783, those elements, as known to them or as disclosed by other prior art identified in the cover pleading. |
| [24f] wherein each of the speakers is configured to receive at least a portion of the customized audio output signals transmitted by the mobile communication device, and | Anderson ’783 expressly or inherently discloses “wherein each of the speakers is configured to receive at least a portion of the customized audio output signals transmitted by the mobile communication device,” for the reasons set forth above for element [1f].<br><br>*See* above at claims [1f]; [24e].<br><br>In addition, a POSITA would have understood that the speakers must receive the enhanced audio signals in order to convert them to sounds in view of Anderson ’783s disclosures at 3:58-60,; 4:1-3; 23:11-14; FIG. 1.<br><br>To the extent that Anderson ’783 does not disclose any elements of this claim limitation, it would have been obvious to a person having ordinary skill in the art to combine, with the teachings of Anderson ’783, those elements, as known to them or as disclosed by other prior art identified in the cover pleading. |

| Claims | Prior Art |
|---|---|
| [24g] wherein each of the speakers is configured to generate at least a portion of the customized audio output for the user in accordance with at least the portion of the customized audio output signals being received. | Anderson ’783 expressly or inherently discloses “wherein each of the speakers is configured to receive at least a portion of the customized audio output signals transmitted by the mobile communication device,” for the reasons set forth above for element [1g].<br><br>*See* above at claims [1g]; [24e].<br><br>In addition, a POSITA would have understood that each of two disclosed respective speakers generates at least a portion of the enhanced audio output signals, at least because Anderson ’783 discloses a binaural system in which stereo audio signals are presented to both ears. *See id.* at 4:30-33.<br><br>To the extent that Anderson ’783 does not disclose any elements of this claim limitation, it would have been obvious to a person having ordinary skill in the art to combine, with the teachings of Anderson ’783, those elements, as known to them or as disclosed by other prior art identified in the cover pleading. |
| [25a] A personal audio system as recited in claim 24, wherein the head-worn wearable electronic device includes at least a rechargeable battery, and | Anderson ’783 expressly or inherently discloses “[a] personal audio system as recited in claim 24, wherein the head-worn wearable electronic device includes at least a rechargeable battery,” for example, by disclosing battery 860. The following citation shows an example of where Anderson ’783 discloses this limitation.<br><br>Anderson ’783 at FIG. 8<br><br> 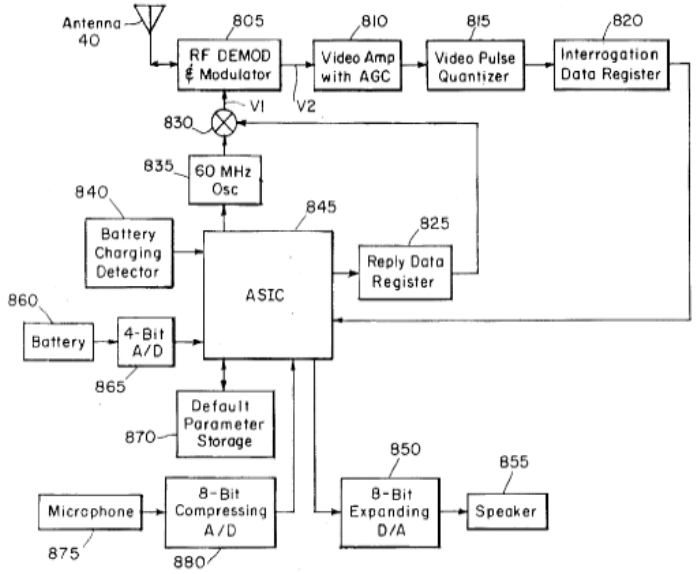 <br><br>FIG. 8 |

| Claims | Prior Art |
| --- | --- |
| | Anderson ’783 at 3:40–41<br>FIG. 8 is a block diagram showing details of an earpiece for a full-featured preferred embodiment of the invention.<br><br>Anderson ’783 at 6:55–57<br>Earpiece power consumption is preferably minimized to extend battery life, and use of a rechargeable battery is desirable.<br><br>To the extent that Anderson ’783 does not disclose any elements of this claim limitation, it would have been obvious to a person having ordinary skill in the art to combine, with the teachings of Anderson ’783, those elements, as known to them or as disclosed by other prior art identified in the cover pleading. |
| [25b] wherein the rechargeable battery is able to be charged when the head-worn wearable electronic device is coupled to a docking station. | Anderson ’783 expressly or inherently discloses “wherein the rechargeable battery is able to be charged when the head-worn wearable electronic device is coupled to a docking station,” for example, by disclosing use of a recharger/storage tray for the battery. The following citation shows an example of where Anderson ’783 discloses this limitation.<br><br>Anderson ’783 at 22:11–61<br>Stand-alone earpiece operation: If an earpiece cannot communicate with an RPU for any reason, stand-alone earpiece operation as a CIC hearing aid is generally desirable. Examples include occasions where the RPU must be turned off by pushing the RPU power-off key 78 (e.g., situations where operation of wireless transmitters is prohibited such as aircraft takeoffs and classified military briefings), RPU battery or other RPU electronics failure, misplacement of an RPU, and primary wireless link 17 interference. Note that a microphone located in the earpiece 10 is preferred to a body-worn microphone, since only an earpiece microphone 12 can be used to provide the desired default CIC hearing aid function (earpiece microphones also provide superior audio localization capabilities as the microphone moves with the user's head, and provide reduced wind and clothing noise compared with body-worn microphones). Parameters that control the stand-alone earpiece operation are stored in the earpiece CIC default parameter storage 870, which is accessed by the ASIC 845 to implement the desired stand-alone functions as described earlier. CIC default parameters include, but are not limited to, settings for the nominal and maximum allowable earpiece volume. Other information contained in the default parameter storage 870 includes, but is not limited to, the communication address and L/R (left/right) selection bit. To ensure that the CIC default parameter storage information cannot be changed inadvertently, changes are only allowed when the earpiece is not in use as, for example, when the earpiece battery 860 is being charged. A battery charging detector 840, that is sensitive to the high-level magnetic induction fields commonly used for earpiece battery charging, indicates |

| Claims | Prior Art |
| --- | --- |
| | to the ASIC 845 that the default parameter storage 870 values may be changed upon receipt of an appropriate command from the RPU. Specifically, to change information in the earpiece CIC default parameter storage 870, a user first activates the earpiece battery charging system, e.g., by placing the earpiece in a recharger/storage tray well known in the art. The RPU keyboard 946 is then used to enter a command to the DSP 948 that indicates the user's desire to change information in the default parameter storage 870, followed by the new information to be stored. The DSP 948 causes the RPU to transmit an interrogation with a reserved address code to which all earpieces being charged within the communication range of the RPU are receptive. The information that is to ultimately be loaded into the earpiece default parameter storage 870 is then transmitted by the RPU using the auxiliary bit field of many successive interrogations, said interrogations are received by the earpiece, and the desired information is loaded into the CIC default parameter storage 870 under control of the ASIC 845.<br><br>To the extent that Anderson ’783 does not disclose any elements of this claim limitation, it would have been obvious to a person having ordinary skill in the art to combine, with the teachings of Anderson ’783, those elements, as known to them or as disclosed by other prior art identified in the cover pleading. |
| [26a] A personal audio system as recited in claim 24, wherein the head-worn wearable electronic device includes at least a rechargeable battery and at least one conductive element, | Anderson ’783, alone or in view of Jannard ’526, expressly or inherently discloses “[a] personal audio system as recited in claim 24, wherein the head-worn wearable electronic device includes at least a rechargeable battery and at least one conductive element.” The following citations show examples of where Anderson ’783 discloses a rechargeable battery. |

| Claims | Prior Art |
|---|---|
| | Anderson ’783 at FIG. 8<br> 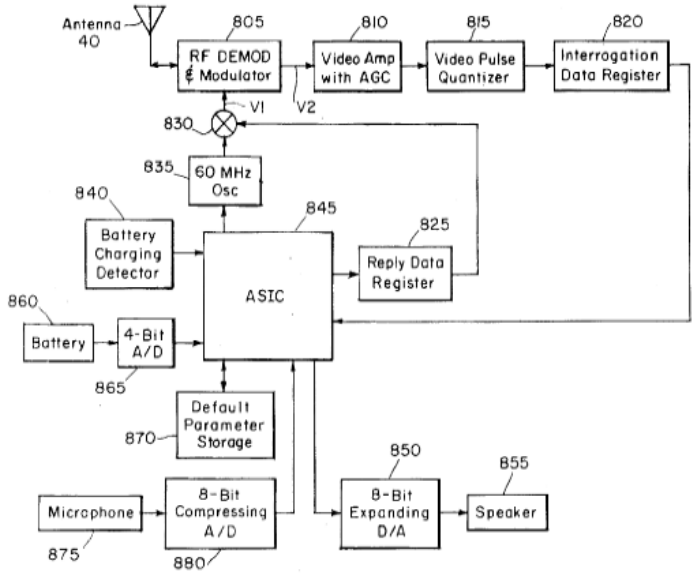 <br><br>FIG. 8<br><br>Anderson ’783 at 3:40–41<br>FIG. 8 is a block diagram showing details of an earpiece for a full-featured preferred embodiment of the invention.<br><br>Anderson ’783 at 6:55–57<br>Earpiece power consumption is preferably minimized to extend battery life, and use of a rechargeable battery is desirable.<br><br>The battery is recharged by placing the device in a recharger. *See* Anderson at 22:46-48. A POSITA would have understood the device to include a conductive element to couple the battery the power source for charging.<br><br>To the extent that Anderson ’783 alone does not teach that the head-worn wearable electronic device includes at least one conductive element, this element is met by Anderson ’783 in combination with Jannard ’526. The following citations show examples of where Jannard ’526 discloses conductive elements for recharging. |

| Claims | Prior Art |
| --- | --- |
| | Jannard ’526 at FIG. 11<br> 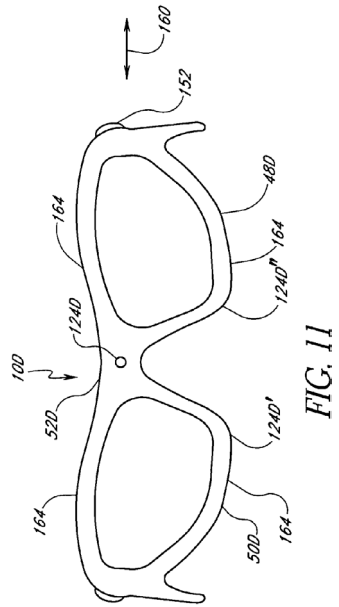 <br><br>Jannard ’526 at 4:27–28<br>FIG. 11 is a front elevational view of the audio device illustrated in FIG. 10.<br><br>Jannard ’526 at 24:56–25:3<br>The audio device 10D can also include power contacts 164 for recharging any rechargeable batteries connected thereto. For example, the power contacts 164 can be disposed on a lower edge of the orbitals 48D, 50D. Thus, with an appropriate recharging cradle (not shown), the audio device 10D can be laid on the cradle, thereby making contact between the power contacts 164 and corresponding contacts in the cradle (not shown). Alternatively, power contacts can be provided in numerous other locations as desired. For example, the power contacts 164 can be disposed at the ends of the ear stems 54D, 56D. A corresponding cradle can include two vertically oriented holes into which the ear stems are inserted for recharging. In this configuration, the lens within the orbitals 48D, 50D would face directly upwardly.<br><br>A POSITA would have been motivated to combine the teachings of Anderson ’783 and Jannard ’526 to meet the claim limitations with a reasonable expectation of success. Anderson ’783 discloses that an earpiece can include a rechargeable battery and notes that the battery can be recharged using “a recharger/storage tray well known in |

| Claims | Prior Art |
| --- | --- |
| | the art." *See id.* at 6:56-57, 22:47-48. However, Anderson '783 does not disclose the details of such a recharger., leaving this detail to a POSITA's knowledge. A POSITA would look to Jannard '526 and/or his own knowledge to supply these missing details, since both Anderson '783 and Jannard '526 disclose head-worn audio devices with rechargeable batteries.<br><br>A POSITA would have a reasonable chance of success combining the teachings of Anderson '783 and Jannard '526 because the inventions share several structural and functional similarities. For example, as noted above, both Anderson '783 and Jannard '526 disclose head-worn devices that are configured to provide audio output to a user. Both devices include similar, well-understood components, such as rechargeable batteries, microphones, speakers, and appropriate processing circuitry. Therefore, combining the teachings of Anderson '783 and Jannard '526 would involve combining known components with predictable results.<br><br>To the extent that Anderson '783 in view of Jannard '526, does not disclose any elements of this claim limitation, it would have been obvious to a person having ordinary skill in the art to combine, with the teachings of Anderson '783 and Jannard '526, those elements, as known to them or as disclosed by other prior art identified in the cover pleading. |
| [26b] wherein the rechargeable battery is able to be electrically coupled via the at least one conductive element to a charging apparatus and charged when the head-worn wearable electronic device is placed within the charging apparatus, and | Anderson '783, alone or in view of Jannard '526, expressly or inherently discloses "wherein the rechargeable battery is able to be electrically coupled via the at least one conductive element to a charging apparatus and charged when the head-worn wearable electronic device is placed within the charging apparatus." The following citations show examples of where Anderson '783 discloses a recharger/storage tray for battery recharging.<br><br>*See* above at claim [26a].<br><br>Anderson '783 at 22:11–61<br>Stand-alone earpiece operation: If an earpiece cannot communicate with an RPU for any reason, stand-alone earpiece operation as a CIC hearing aid is generally desirable. Examples include occasions where the RPU must be turned off by pushing the RPU power-off key 78 (e.g., situations where operation of wireless transmitters is prohibited such as aircraft takeoffs and classified military briefings), RPU battery or other RPU electronics failure, misplacement of an RPU, and primary wireless link 17 interference. Note that a microphone located in the earpiece 10 is preferred to a body-worn microphone, since only an earpiece microphone 12 can be used to provide the desired default CIC hearing aid function (earpiece microphones also provide superior audio localization capabilities as the microphone moves with the user's head, and provide reduced wind and clothing noise compared with body-worn microphones). Parameters that control the stand-alone earpiece operation are stored in the earpiece CIC default parameter storage 870, which is accessed by the ASIC 845 to implement the desired stand-alone functions as described earlier. CIC default parameters include, but are not limited to, settings for the nominal and maximum allowable earpiece volume. Other information contained in the default parameter storage 870 includes, but is not limited to, the |

| Claims | Prior Art |
| --- | --- |
| | communication address and L/R (left/right) selection bit. To ensure that the CIC default parameter storage information cannot be changed inadvertently, changes are only allowed when the earpiece is not in use as, for example, when the earpiece battery 860 is being charged. A battery charging detector 840, that is sensitive to the high-level magnetic induction fields commonly used for earpiece battery charging, indicates to the ASIC 845 that the default parameter storage 870 values may be changed upon receipt of an appropriate command from the RPU. Specifically, to change information in the earpiece CIC default parameter storage 870, a user first activates the earpiece battery charging system, e.g., by placing the earpiece in a recharger/storage tray well known in the art. The RPU keyboard 946 is then used to enter a command to the DSP 948 that indicates the user's desire to change information in the default parameter storage 870, followed by the new information to be stored. The DSP 948 causes the RPU to transmit an interrogation with a reserved address code to which all earpieces being charged within the communication range of the RPU are receptive. The information that is to ultimately be loaded into the earpiece default parameter storage 870 is then transmitted by the RPU using the auxiliary bit field of many successive interrogations, said interrogations are received by the earpiece, and the desired information is loaded into the CIC default parameter storage 870 under control of the ASIC 845.<br><br>To the extent that Anderson alone does not teach that a rechargeable battery is able to be electrically coupled via the at least one conductive element to the charging apparatus and charged when the head-worn wearable electronic device is placed within the charging apparatus, this element is met by Anderson in combination with Jannard.<br><br>Jannard ’526 at 24:56–25:3<br>The audio device 10D can also include power contacts 164 for recharging any rechargeable batteries connected thereto. For example, the power contacts 164 can be disposed on a lower edge of the orbitals 48D, 50D. Thus, with an appropriate recharging cradle (not shown), the audio device 10D can be laid on the cradle, thereby making contact between the power contacts 164 and corresponding contacts in the cradle (not shown). Alternatively, power contacts can be provided in numerous other locations as desired. For example, the power contacts 164 can be disposed at the ends of the ear stems 54D, 56D. A corresponding cradle can include two vertically oriented holes into which the ear stems are inserted for recharging. In this configuration, the lens within the orbitals 48D, 50D would face directly upwardly.<br><br>It would have been obvious to a POSITA to combine the teachings of Anderson ’783 and Jannard ’526 for the reasons set forth above with respect to element [26a]. |

| Claims | Prior Art |
| --- | --- |
| | To the extent that Anderson ’783 in view of Jannard ’526, does not disclose any elements of this claim limitation, it would have been obvious to a person having ordinary skill in the art to combine, with the teachings of Anderson ’783 in view of Jannard ’526, those elements, as known to them or as disclosed by other prior art identified in the cover pleading. |
| [26c] wherein the electrical coupling of the at least one conductive element with the charging apparatus is supported by at least a magnetic element. | Anderson ’783, alone or in view of Jannard ’526, expressly or inherently discloses “wherein the electrical coupling of the at least one conductive element with the charging apparatus is supported by at least a magnetic element.” The following citations show examples of where Anderson ’783 discloses a recharger/storage tray for battery recharging and that high–level magnetic induction fields are used for battery charging.<br><br>Anderson ’783 at 22:11–61<br>Stand-alone earpiece operation: If an earpiece cannot communicate with an RPU for any reason, stand-alone earpiece operation as a CIC hearing aid is generally desirable. Examples include occasions where the RPU must be turned off by pushing the RPU power-off key 78 (e.g., situations where operation of wireless transmitters is prohibited such as aircraft takeoffs and classified military briefings), RPU battery or other RPU electronics failure, misplacement of an RPU, and primary wireless link 17 interference. Note that a microphone located in the earpiece 10 is preferred to a body-worn microphone, since only an earpiece microphone 12 can be used to provide the desired default CIC hearing aid function (earpiece microphones also provide superior audio localization capabilities as the microphone moves with the user's head, and provide reduced wind and clothing noise compared with body-worn microphones). Parameters that control the stand-alone earpiece operation are stored in the earpiece CIC default parameter storage 870, which is accessed by the ASIC 845 to implement the desired stand-alone functions as described earlier. CIC default parameters include, but are not limited to, settings for the nominal and maximum allowable earpiece volume. Other information contained in the default parameter storage 870 includes, but is not limited to, the communication address and L/R (left/right) selection bit. To ensure that the CIC default parameter storage information cannot be changed inadvertently, changes are only allowed when the earpiece is not in use as, for example, when the earpiece battery 860 is being charged. A battery charging detector 840, that is sensitive to the high-level magnetic induction fields commonly used for earpiece battery charging, indicates to the ASIC 845 that the default parameter storage 870 values may be changed upon receipt of an appropriate command from the RPU. Specifically, to change information in the earpiece CIC default parameter storage 870, a user first activates the earpiece battery charging system, e.g., by placing the earpiece in a recharger/storage tray well known in the art. The RPU keyboard 946 is then used to enter a command to the DSP 948 that indicates the user's desire to change information in the default parameter storage 870, followed by the new information to be stored. The DSP 948 causes the RPU to transmit an interrogation with a reserved address code to which all earpieces being charged within the communication range of the RPU are |

| Claims | Prior Art |
| --- | --- |
| | receptive. The information that is to ultimately be loaded into the earpiece default parameter storage 870 is then transmitted by the RPU using the auxiliary bit field of many successive interrogations, said interrogations are received by the earpiece, and the desired information is loaded into the CIC default parameter storage 870 under control of the ASIC 845.<br><br>It would have been obvious to a POSITA to combine the teachings of Anderson ’783 and Jannard ’526 for the reasons set forth above with respect to element [26a].<br><br>To the extent that Anderson ’783 in view of Jannard ’526 does not disclose any elements of this claim limitation, it would have been obvious to a person having ordinary skill in the art to combine, with the teachings of Anderson ’783 in view of Jannard ’526, those elements, as known to them or as disclosed by other prior art identified in the cover pleading. |
| 27. A personal audio system as recited in claim 24, wherein the mobile communication device is configured to wirelessly communicate with the head-worn wearable electronic device over a wireless network. | Anderson ’783 expressly or inherently discloses “wherein the mobile communication device is configured to wirelessly communicate with the head-worn wearable electronic device over a wireless network.” The following citation shows an example of where Anderson ’783 discloses this limitation.<br><br>*See* above at claim [1e]. The RPU and earpiece are wirelessly networked via the two-way wireless link 17. *See* Anderson at 1:50-63, 4:1-4.<br><br>Anderson ’783 at Abstract<br>A hearing aid or audio communication system includes an earpiece (10) that can be hidden in the ear canal, and which communicates wirelessly with a remote processor unit, or RPU (16), that enhances audio signals and can be concealed under clothing. Sounds from the environment are picked up by a microphone (12) in the earpiece and sent with other information over a two-way wireless link (17) to the RPU (16). The wireless link (17) uses microwaves for component miniaturization. Furthermore, use of radar technology to implement the wireless link (17), with an RPU (16) interrogator and earpiece (10) transponder, reduces earpiece size and power, as no microwave oscillator is needed in the earpiece (10). Optional secondary wireless link circuitry (19) can be used between the RPU (16) and a cellular telephone system or other sources of information. Electronic voice recognition and response can control system operation. |

| Claims | Prior Art |
| --- | --- |
| | Anderson ’783 at FIG. 1 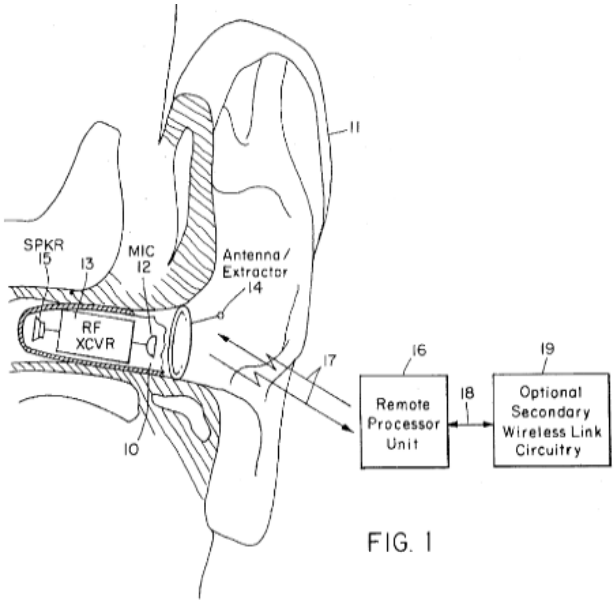  FIG. 1 |

| Claims | Prior Art |
|---|---|
| | Anderson ’783 at FIG. 2<br> 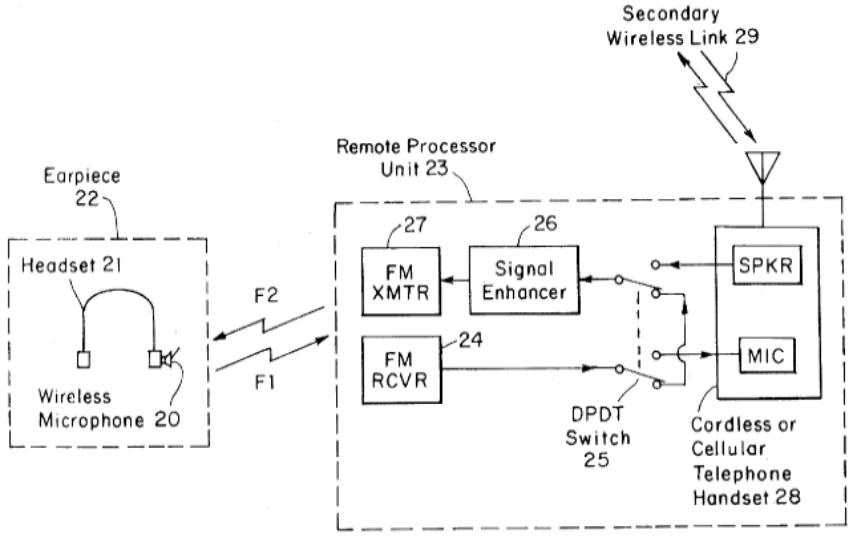 <br><br>FIG. 2<br><br>Anderson ’783 at 1:5–18<br>The present invention is directed to hearing aids, and in particular to a hearing aid having an earpiece housing worn in or at the ear and a remote processor unit (RPU) worn by or located near the user that wirelessly receives signals from and transmits signals to the earpiece. The present invention is also directed to the use of hearing aid systems as wireless communication devices for hands-free cellular telephone and mobile radio communication "handsets," covert operation and control of hearing aids, hearing protection and noise cancellation simultaneous with binaural hearing aid functions, hearing test equipment, location of misplaced hearing aid system components and wireless cochlear implants.<br><br>Anderson ’783 at 1:50–65<br>The present invention uses an audio path that is different from the audio path used by devices in the prior art. The present invention uses a primary two-way wireless link (not a one-way link as in the prior art) between an earpiece worn in or at the user's ear and an RPU worn by or located near the user. In the present invention, audio signals from the environment are picked up by a microphone in the earpiece (not a hand-held microphone as used by wireless hearing aids in the prior art) and transmitted over the primary two-way wireless link to the RPU (instead of going to processor electronics contained in the earpiece, as in basic |

| Claims | Prior Art |
| --- | --- |
| | hearing aids known in the prior art), where the audio signals are enhanced according to the user's needs before transmission over the primary wireless link to the earpiece. Signal processing is performed in the RPU rather than the earpiece to take advantage of relaxed size and power constraints.<br><br>Anderson ’783 at 2:20–39<br>It is an object of the present invention to provide a new and useful auditory aid for hearing-impaired persons (i.e., those having certain residual hearing) by removing audio signal enhancement functions from the earpiece and placing them in an RPU. Use of an RPU provides several advantages over systems that attempt to place all system capabilities within the earpiece. The RPU approach allows a simple earpiece design comprising a miniature low-power wireless transceiver, microphone and speaker. Note that the speaker is also known in the hearing aid art as a "receiver," but the term "speaker" is used here to avoid confusion (similarly, the term "talker," not "speaker," is used to describe a human producing vocal sounds). The resulting earpiece is extremely small, can be hidden from view in the ear canal if desired, and allows complete freedom of movement when a primary two-way wireless link to the RPU is used. Processing for all major system capabilities, such as amplification and other forms of signal enhancement, takes place in the RPU where size and power constraints are relaxed, leading to a cost-effective design.<br><br>Anderson ’783 at 2:60–3:5<br>A further object of this invention is to provide some degree of protection for the residual hearing capability of a hearing-impaired user (or a non-impaired user who wishes to avoid impairment) in a wireless hearing aid system having the simultaneous capabilities of noise cancellation and binaural processing (e.g., directionality). Other objects of the invention are to provide a convenient means for testing a user's hearing capability without the need for additional equipment, to assist users in the location of misplaced hearing aid system components, and to provide profoundly deaf cochlear implant patients with a wireless system allowing improved freedom of movement compared to existing wire-connected systems.<br><br>Anderson ’783 at 3:52–4:14<br>One preferred embodiment of the invention herein described is shown in block diagram form in FIG. 1. In this figure, the earpiece 10 shown worn in the ear 11 uses a standard completely-in-the-canal (CIC) housing, well known in the art, although many other earpiece housing types known in the art (e.g., behind-the-ear, or BTE) can be used. The earpiece shown in FIG. 1 comprises a microphone 12, RF transceiver 13 with an antenna that doubles as an earpiece extractor 14, and speaker 15. Although the dual-use antenna/extractor arrangement shown in FIG. 1 is often desirable, a separate antenna or antennae can be used in conjunction with many different types of earpiece extractors as appropriate for a particular application. Antennae and |

| Claims | Prior Art |
| --- | --- |
| | extractors can be disguised as ear hair or jewelry (e.g., earrings), or conductive filaments can be permanently implanted in the ear cartilage to act as antennae using a process similar to ear piercing. The earpiece 10 communicates with a remote processor unit (RPU) 16 via a primary two-way RF link 17, although many other wireless link media (e.g., ultrasonic or infrared) may be used instead. The RPU is typically worn under clothing (e.g., carried in a pocket or purse), but may also be worn in plain sight (e.g., on a belt) if desired. The RPU 16 may be connected (via wired or wireless means 18) to optional secondary wireless link circuitry 19 that allows wireless communication between the RPU and other sources of information (e.g., the general subscriber telephone network) via a secondary wireless link. Note that the optional secondary wireless link circuitry 19 may or may not be contained within the RPU case 70 of FIG. 7.<br><br>Anderson ’783 at 5:3–21<br>During normal operation, speech signals from a nearby talker (and other signals in the ambient audio environment) are picked up by the earpiece wireless microphone 20 and transmitted to the RPU FM receiver 24. The RPU FM receiver 24 output level may be adjusted using the RPU FM receiver 24 volume control. The resulting electrical waveform representing signals from the nearby talker travels through the DPDT switch 25, which is set to the lower position as shown in FIG. 2, to the signal enhancer 26. The signal enhancer 26 may be, for example, a voice changer device that varies the pitch of a received speech signal according to the setting of pushbutton controls located on the RPU signal enhancer 26. The speech signal's pitch can then be raised or lowered as desired to help compensate for a user's hearing loss relative to a particular talker's voice characteristics. The modified speech signal travels from the RPU signal enhancer 26 to the RPU FM transmitter 27, and finally to the earpiece headset 21 receiver where the signal is converted to acoustic waves heard by the user.<br><br>Anderson ’783 at 6:8–25<br>The user's voice (and other signals in the ambient audio environment) is picked up by the earpiece wireless microphone 20, transmitted to the RPU 23 FM receiver 24, sent through the DPDT switch 25 to the microphone input of the handset 28 (the handset's microphone transducer may be removed) and transmitted on the secondary wireless link 29 to, e.g., the general subscriber telephone network. Signals from the secondary wireless link 29 are received by the handset 28, sent from the speaker output of the handset 28 (the handset's speaker may be removed) via the DPDT switch 25 to the signal enhancer 26, FM transmitter 27 and finally to the earpiece headset 21 receiver where the signals are converted to acoustic waves heard by the user. Note that the RPU 23 may also include straight-forward connections to a "personal digital assistant" computer, or voice-operated devices connected to the FM receiver 24 output and not shown in FIG. 2. |

| Claims | Prior Art |
| --- | --- |
| | Anderson ’783 at 21:50–62<br>In the simplest case, the ASIC 845 reads data from the A/D 880, performs a multiplication of the data by a constant (read from the default parameter storage 870) to provide amplification, compares the result with maximum allowable values (read from the default parameter storage 870) and writes the result to the D/A 850. The ASIC 845 may perform other processing (e.g., adaptive volume control) as well. Although none of the remote processor and communication features are available in stand-alone mode, which uses pre-selected hearing aid parameter settings from the default parameter storage 870 in the earpiece, the earpiece provides a useful amplified audio path from the microphone to the speaker.<br><br>Anderson ’783 at 22:61–23:35<br>Details of normal system operation: During normal operation of the hearing aid with wireless remote processor, sounds from the ambient environment are picked up by a microphone 12 in the earpiece 10 and transmitted with other information (e.g., data representing the earpiece battery 860 voltage as obtained by an A/D 865 converter and transmitted under control of the earpiece ASIC 845 in the auxiliary bit of many successive replies via the reply data register 825) over a primary two-way wireless link 17 to the RPU 16, where the audio signals are enhanced according to the user's needs by the RPU DSP 948. Signal enhancement is achieved via any of a number of techniques well known in the art that use the capabilities of the general-purpose RPU DSP 948. The enhanced audio signals may be combined with other information (e.g., a synthesized voice, generated within the DSP 948, warning that the aforementioned earpiece battery voltage is low) and transmitted from the RPU 16 over the primary wireless link 17 to the earpiece 10, where they are converted by a speaker 15 to sounds that can only be heard by the user 11. Art auxiliary speaker can be supplied in the RPU 16 as a peripheral 950 device that allows people other than the user to hear the same sounds as those produced by the earpiece speaker 15, if desired (as, e.g., when a person other than the user wishes to use the system's optional cellular telephone capabilities). A different, optional secondary two-way wireless link (shown as part of the RPU in FIG. 9 as secondary wireless link circuitry 944, or connected to the RPU by a wired or other, e.g. infrared, wireless link 18 and shown as optional secondary wireless link circuitry 19 in FIG. 1) can be used for communication between the RPU and a cellular telephone system or other sources of information. An RPU keyboard suitable for covert data entry 72, or voice recognition capabilities in the RPU (implemented, e.g., using any of a number of techniques well known in the art that use the general-purpose RPU DSP 948), can be used to control hearing aid parameters (such as amplification level set by the RPU DSP 948) and telephone dialing functions (e.g., automatic dialing of a predefined telephone number using information stored in the RPU DSP 948) in a manner that can be made imperceptible to a casual observer if desired. |

| Claims | Prior Art |
| --- | --- |
| | Anderson ’783 at 24:47–66<br>Morse code keys 956 or voice recognition capabilities implemented using the RPU DSP 948) in a manner that can be made imperceptible to a casual observer if desired. In this respect, the system acts as a "virtual handset" communication aid that replaces a conventional telephone handset in many applications (although users may additionally communicate with a conventional handset or speakerphone in the usual fashion). To accomplish the virtual handset function, the RPU 16 is equipped with optional secondary two-way wireless link circuitry 19 to communicate with a telephone or other communication network. The secondary wireless link is separate from, and does not interfere with, the primary wireless link 17 between the earpiece 10 and RPU 16. In applications where relatively high-power transmissions take place on the secondary link and the secondary link transmitter is integrated into the RPU, the RPU can be placed on a user's wrist or ankle away from vital organs to reduce any potential health risk relative to conventional wireless handsets.<br><br>Anderson ’783 at 25:15–27<br>To obtain solicited information, user requests are processed in a variety of means well known in the art, including inputs via one or more pushbuttons on the RPU and voice recognition computer programs implemented in the RPU electronics. Voice recognition can be used almost exclusively, if desired, thereby eliminating nearly all RPU pushbutton controls. Voice commands recognized by the RPU can cause the RPU to initiate actions such as changing hearing aid parameter settings (e.g., volume), or activate appliances and environmental controls (e.g., aids for the physically handicapped) in a distributed wireless network via the secondary wireless link.<br><br>Eaton ’458 at Abstract<br>Systems, structures, and methods are provided to fit, program, or upgrade a hearing aid system to a patient. One embodiment includes the use of a mobile device to interact with the hearing aid system through a short-range network. The mobile device is also adapted to communicate with a server through a long-range wireless network. The server may reside on the Internet.<br><br>To the extent that Anderson ’783 does not disclose any elements of this claim limitation, it would have been obvious to a person having ordinary skill in the art to combine, with the teachings of Anderson ’783, those elements, as known to them or as disclosed by other prior art identified in the cover pleading. |
| 28. A personal audio system as recited in claim 27, wherein | Anderson ’783 in view of Eaton ’458 expressly or inherently discloses “[a] personal audio system as recited in claim 27, wherein the wireless network is a short-range wireless network.” |

| Claims | Prior Art |
| --- | --- |
| the wireless network is a short-range wireless network. | Anderson's wireless network is preferably implemented with operating frequencies in the 900 MHz to 6 GHz range, because of that range's "proven ability to … provide a *short-range wireless communication link*". *See* Anderson at 7:39-49. The wirelessly networked RPU and earpiece are separated by two feet. *See id.* at 6:60-63. Based on these disclosures, a POSITA would have understood Anderson to teach a short-range wireless network. To the extent that Anderson is found not to include this recitation, Anderson in view of Eaton '458 discloses these recitations.<br><br>The following citations show examples of where Eaton '458 discloses this limitation.<br><br>Eaton '458 at Abstract<br>Systems, structures, and methods are provided to fit, program, or upgrade a hearing aid system to a patient. One embodiment includes the use of a mobile device to interact with the hearing aid system through a short-range network. The mobile device is also adapted to communicate with a server through a long-range wireless network. The server may reside on the Internet.<br><br>Eaton '458 at 6:11–25<br>The hearing aid system 102 can communicate bi-directionally via a short-range network 104. In one embodiment, the short-range network is a pico-cellular network. In another embodiment, the short-range network includes a network occupying an un-licensed frequency-band. In one embodiment, the short-range network 104 includes wired networking. In another embodiment, the short-range network 104 includes a wireless short-range network such as a radio transmission network or an optical transmission network. One implementation of the radio transmission network includes Bluetooth technology. Bluetooth technology provides a short-range, low-cost radio communication link. Bluetooth may be used to replace wired cables that connect peripherals to this sample of equipment: cellular phones, audio headsets, computer laptops, personal digital assistants, digital cameras, etc. Another implementation of the radio transmission network includes HomeRF, DECT, PHS, or Wireless LAN (WLAN), or other equivalent proprietary wireless communications protocols that do not depart from the present invention. |

| Claims | Prior Art |
|---|---|
| | Eaton ’458 at FIG. 1<br> 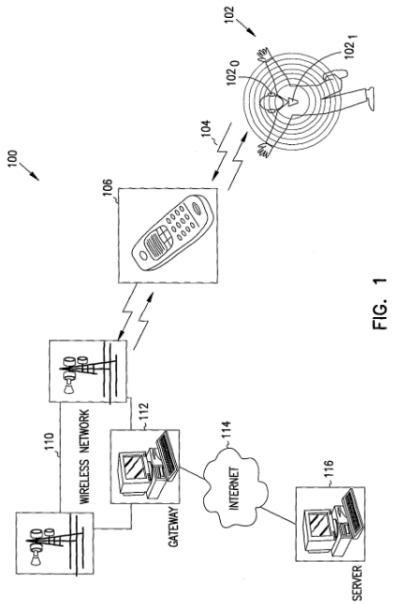 <br><br>FIG. 1<br><br>A POSITA would have been motivated to combine the teachings of Anderson ’783 and Eaton ’458 to meet the claim limitations with a reasonable expectation of success for the reasons described above with respect to claim 20.<br><br>To the extent that Anderson ’783 in view of Eaton ’458 does not disclose any elements of this claim limitation, it would have been obvious to a person having ordinary skill in the art to combine, with the teachings of Anderson ’783 in view of Eaton ’458, those elements, as known to them or as disclosed by other prior art identified in the cover pleading. |
| 29. A personal audio system as recited in claim 27, wherein the short-range wireless network is a Bluetooth network. | Anderson ’783 in view of Eaton ’458 expressly or inherently discloses “[a] personal audio system as recited in claim 27, wherein the short-range wireless network is a Bluetooth network.” The following citations show examples of where Eaton ’458 discloses this limitation.<br><br>Eaton ’458 at 6:11–25<br>The hearing aid system 102 can communicate bi-directionally via a short-range network 104. In one embodiment, the short-range network is a pico-cellular network. In another embodiment, the short-range network includes a network occupying an un-licensed frequency-band. In one embodiment, the short-range network 104 includes wired networking. In another embodiment, the short-range network 104 includes a |

| Claims | Prior Art |
|---|---|
| | wireless short-range network such as a radio transmission network or an optical transmission network. One implementation of the radio transmission network includes Bluetooth technology. Bluetooth technology provides a short-range, low-cost radio communication link. Bluetooth may be used to replace wired cables that connect peripherals to this sample of equipment: cellular phones, audio headsets, computer laptops, personal digital assistants, digital cameras, etc. Another implementation of the radio transmission network includes HomeRF, DECT, PHS, or Wireless LAN (WLAN), or other equivalent proprietary wireless communications protocols that do not depart from the present invention.<br><br>Eaton ’458 at FIG. 1<br> 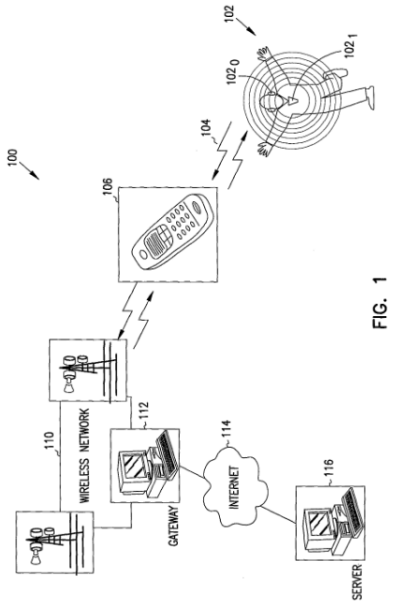 <br><br>FIG. 1<br><br>A POSITA would have been motivated to combine the teachings of Anderson ’783 and Eaton ’458 to meet the claim limitations with a reasonable expectation of success for the reasons described above with respect to claim 20. A POSITA would have understood Bluetooth to be a suitable technology for the short distances (*e.g.*, two feet) preferred by Anderson. *See* Anderson at 1:50-63; 4:1-4; 6:60-63.<br><br>To the extent that Anderson ’783 in view of Eaton ’458 does not disclose any elements of this claim limitation, it would have been obvious to a person having ordinary skill in the art to combine, with the teachings of Anderson ’783 in view of Eaton ’458, those elements, as known to them or as disclosed by other prior art identified in the cover pleading. |

| Claims | Prior Art |
| --- | --- |
| 30. A personal audio system as recited in claim 24, wherein the head-worn wearable electronic device includes an accelerometer. | Anderson ’783 in view of Abreu ’960 or Irvin ’332 expressly or inherently discloses “[a] personal audio system as recited in claim 24, wherein the head-worn wearable electronic device includes an accelerometer.”<br><br>*See* above at claim [23].<br><br>The following citations show examples of where Abreu ’960 discloses this limitation.<br><br>Abreu ’960 at 13:46–60<br>The eyeglasses or other support structures can also have elements which produce and radiate recognizable signals and this procedure could be used to locate and track individuals, particularly in military operations. A permanent magnet can also be mounted in the eyeglasses and used for tracking as described above. A fixed frequency transmitter can be mounted in the eyeglasses and used as a tracking device which utilizes a satellite tracking system by noting the frequency received from the fixed frequency transmitter to a passing satellite, or via Global Positioning Systems. Motion and deceleration can be detected by mounting an accelerometer in the eyeglasses. The use of eyeglasses as tracking means can be useful for locating a kidnapped individual or for rescue operations in the military, since eyeglasses are normally unsuspecting articles.<br><br>The following citation shows examples of where Irvin ’332 discloses this limitation.<br><br>Irvin ’332 at 5:1–23<br>Because the wireless headset 100 of the present invention automatically enables and disables its communication functions based on use, the sensor 220 may be based on a variety of technologies. In general, its purpose is to provide a signal responsive to a natural stimulus associated with use of the headset by a user. Movement or vibration of the wireless headset 100, or placement of the wireless headset 100 upon the user's body indicates usage. Movement may be detected based on vibration or by sensing acceleration, such as with an accelerometer. Mechanical or liquid-based switches represent alternate mechanisms for sensing movement. In such switches, movement causes an electrical connection to be established between contact pairs. Further, the particular sensor 220 employed may be tuned or configured such that only stimulus consistent with actual use actuates the sensor, thus avoiding inadvertent or unintended enabling of the wireless headset 100. In such configurations, the sensor 220 preferably employs output conditioning that prevents assertion of the sensor output signal for stimulus below a defined threshold. Alternatively, the power control circuit 210 may include such conditioning as part of its interface to the sensor 220. FIGS. 4A–4D illustrate possible sensor embodiments. |

| Claims | Prior Art |
|---|---|
| | A POSITA would have been motivated to combine the teachings of Anderson ’783 and Abreu ’960 or Irvin ’332 to meet the claim limitations with a reasonable expectation of success for the reasons described above with respect to claims 13 and 23.<br><br>To the extent that Anderson ’783 in view of Abreu ’960 or Irvin ’332 does not disclose any elements of this claim limitation, it would have been obvious to a person having ordinary skill in the art to combine, with the teachings of Anderson ’783, those elements, as known to them or as disclosed by other prior art identified in the cover pleading. |
| 31. A personal audio system as recited in claim 24, wherein the head-worn wearable electronic device includes a plurality of circuit boards, each circuit board including at least one integrated circuit mounted thereto. | Anderson ’783 in view of Jannard ’526 expressly or inherently discloses “[a] personal audio system as recited in claim 24, wherein the head-worn wearable electronic device includes a plurality of circuit boards, each circuit board including at least one integrated circuit mounted thereto.” The following citations show examples of where Anderson ’783 discloses the use of application–specific integrated circuits in the earpiece.<br><br>Anderson ’783 at FIG. 8<br><br> 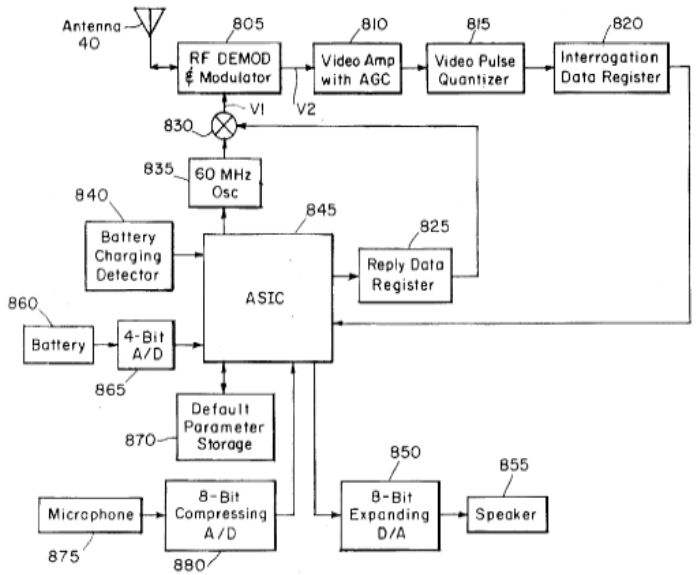 <br><br>FIG. 8<br><br>Anderson ’783 at 3:40–41<br>FIG. 8 is a block diagram showing details of an earpiece for a full-featured preferred embodiment of the invention. |

| Claims | Prior Art |
|---|---|
| | Anderson ’783 at 12:38–46<br>Note that all earpiece functions (e.g., power control for the 60 MHz oscillator 835) are controlled by a custom application-specific integrated circuit (ASIC) 845. The ASIC 845 may be a low-power low-voltage device similar, e.g., to the ECI Semiconductor P576 custom programmable linear/digital gate array. Many of the functions that are shown as separate blocks for clarity in FIG. 8, e.g., reply data register 825, may be implemented within the ASIC 845.<br><br>Anderson ’783 further discloses that a binaural system including two earpieces can be used. *See id.* at 4:30-33. Thus, at least two ASICs can be used.<br><br>To the extent that Anderson ’783 alone does not teach that the head-worn wearable electronic device includes a plurality of circuit boards each having at least one integrated circuit mounted thereto, this element is met by Anderson ’783 combined with Jannard ’526. The following citations show examples of where Jannard ’526 discloses examples of this limitation. *See, e.g. id.* at 12:63–66; 13:51–55; 15:49 (describing multiple circuit boards 264, 284).<br><br>Jannard ’526 at FIG. 3J<br> 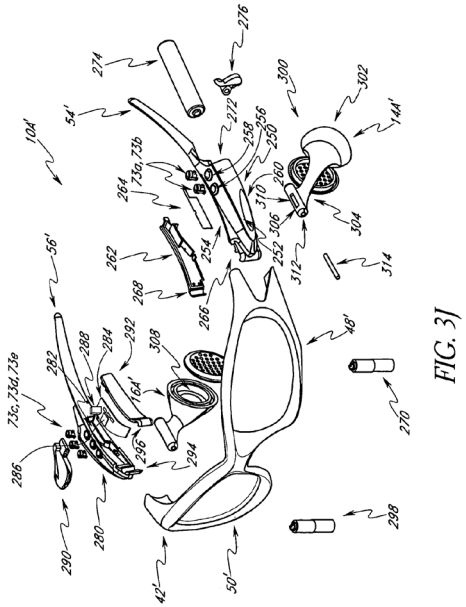 <br>FIG. 3J<br><br>Jannard ’526 at 3:56–58<br>FIG. 3J is a front, top, and left side perspective and exploded view of the wearable audio device illustrated in |

| Claims | Prior Art |
| --- | --- |
| | FIG. 3D.<br><br>Jannard ’526 at 12:62–13:6<br>A cover member 262 cooperates with the housing 250 to define the closed internal cavity 252. In the illustrated embodiment, the internal cavity 252 includes at least one compartment configured to receive an electronic circuit board 264 which includes at least one switch for each of the buttons 73a, 73b. In an exemplary but non-limiting embodiment, the board 264 can include two switches, one for each of the buttons 73a, 73b, which are configured to control a volume output from the speakers 14A′, 16A′. The cover 262 can be attached to the ear stems 54A′ with any type of fastener, such as, for example, but without limitation, screws, rivets, bolts, adhesive, and the like.<br><br>Jannard ’526 at 13:50–55<br>The internal cavity 282, in the illustrated embodiment, is configured to receive a printed circuit board 284. In the illustrated embodiment, the printed circuit board 284 includes one switch for each of the buttons 73c, 73d, and 73e. Additionally, the printed circuit board 284 includes an audio file storage and playback device 286.<br><br>Jannard ’526 at 14:6–14<br>Advantageously, the printed circuit board 284 also includes or is in electrical communication with a data transfer port 388. In the illustrated embodiment, the housing 280 includes an aperture (not shown) disposed in a position similar to the position of the aperture 272 on the housing 250. In the housing 280, however, the aperture is aligned with the data transfer port 288. Thus, when the printed circuit board 284 is received in the internal cavity 282, the data transfer port 288 is aligned with the aperture.<br><br>Jannard ’526 at 15:60–16:2<br>Thus, with reference to FIGS. 3J and 3M, the ribbon connector 318 can extend from the housing 280, into the recesses 294, 296, through an aperture (not shown) in the hinge pin 298 to the upper opening within the hinge pin 298, then through the channel 316 (FIG. 3E), to an upper opening of the hinge pin 270, out through an aperture (not shown) through a side of a hinge pin 270, through the recesses 266, 268 of the housing 250, and then to the speaker 14A′, printed circuit board 264, and the power storage device 274. |

| Claims | Prior Art |
|---|---|
| | It would have been obvious to a POSITA to mount Anderson ’783’s ASICs to circuit boards, such as those disclosed in Jannard ’526, in order to allow the ASICs to interact with other components of their respective earpieces.<br><br>It would have been obvious to a POSITA to combine the teachings of Anderson ’783 and Jannard ’526 for the reasons set forth above with respect to claim 26.<br><br>To the extent that Anderson ’783 in view of Jannard ’526, does not disclose any elements of this claim limitation, it would have been obvious to a person having ordinary skill in the art to combine, with the teachings of Anderson ’783 in view of Jannard ’526, those elements, as known to them or as disclosed by other prior art identified in the cover pleading. |
| 32. A personal audio system as recited in claim 31, wherein at least one of the circuit boards is a flexible printed circuit board. | Anderson ’783 in view of Jannard ’526 expressly or inherently discloses “[a] personal audio system as recited in claim 31, wherein at least one of the circuit boards is a flexible printed circuit board.”<br><br>*See* above at claim [31].<br><br>The following citations show examples of where Jannard ’526 discloses this claim limitation.<br><br>Jannard ’526 at FIG. 3J<br><br> 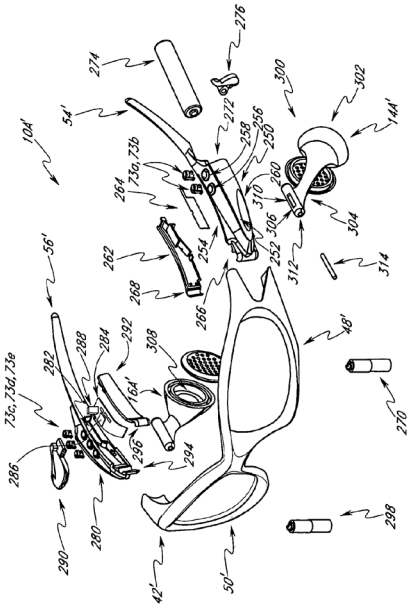 <br>FIG. 3J |

| Claims | Prior Art |
| --- | --- |
| | Jannard ’526 at 3:56–58<br>FIG. 3J is a front, top, and left side perspective and exploded view of the wearable audio device illustrated in FIG. 3D.<br><br>Jannard ’526 at 12:62–13:6<br>A cover member 262 cooperates with the housing 250 to define the closed internal cavity 252. In the illustrated embodiment, the internal cavity 252 includes at least one compartment configured to receive an electronic circuit board 264 which includes at least one switch for each of the buttons 73a, 73b. In an exemplary but non-limiting embodiment, the board 264 can include two switches, one for each of the buttons 73a, 73b, which are configured to control a volume output from the speakers 14A′, 16A′. The cover 262 can be attached to the ear stems 54A′ with any type of fastener, such as, for example, but without limitation, screws, rivets, bolts, adhesive, and the like.<br><br>Jannard ’526 at 26:21–27<br>With reference to FIGS. 8, 9A, and 9B, in another embodiment, the transceiver 114 is adapted to employ a wide variety of technologies, including wireless communication such as RF, IR, ultrasonic, laser or optical, as well as wired and other communications technologies. In one embodiment, a body-LAN radio is employed. Other embodiments can employ a flexible-circuit design.<br><br>It would have been obvious to a POSITA to combine the teachings of Anderson ’783 and Jannard ’526 for the reasons set forth above with respect to claim 26.<br><br>To the extent that Anderson ’783 in view of Jannard ’526, does not disclose any elements of this claim limitation, it would have been obvious to a person having ordinary skill in the art to combine, with the teachings of Anderson ’783 in view of Jannard ’526, those elements, as known to them or as disclosed by other prior art identified in the cover pleading. |
| 33. A personal audio system as recited in claim 24, wherein the head-worn wearable electronic device includes a touch sensitive surface. | Anderson ’783 in view of Bodley ’433 or Hollemans or Seshadri expressly or inherently discloses “[a] personal audio system as recited in claim 24, wherein the head-worn wearable electronic device includes a touch sensitive surface,” for example, because Bodley ’433 discloses a touch sensitive display.<br><br>The citations provided below discuss Bodley ’433’s example disclosures with respect to this limitation. |

| Claims | Prior Art |
| --- | --- |
| | Bodley ’433 at FIG. 1<br> 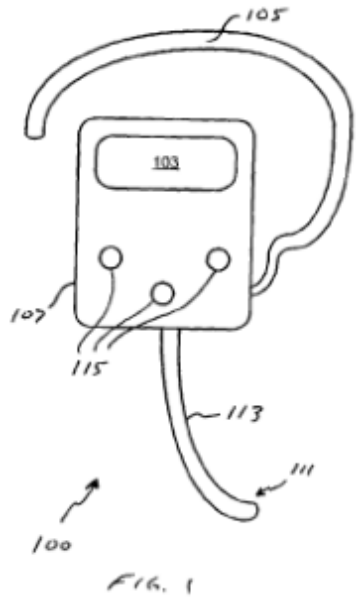 <br><br>Bodley ’433 at 2:7–8<br>FIG. 1 is a frontal view of a generic headset that includes a display in accordance with the invention;<br><br>Bodley ’433 at 2:38–50<br>Although headset 100 may use any of a variety of means of attaching to a user (e.g., headband, earpiece, etc.) and thus allowing hands-free operation of the headset, preferably headset 100 includes an earpiece 105 (e.g., an ear hook) that is coupled to the user's ear, or a portion thereof. More preferably, earpiece 105 fits around a portion of the user's ear. Earpiece 105 is coupled to body 107 of the headset, body 107 housing the various electronic components necessary to provide functionality to headset 100. Attached to the back surface of body 107 is an output transducer 109 (e.g., a speaker). Also coupled to body 107 is an input transducer 111 (e.g., a microphone), which, in this embodiment, is located at the end of a boom member 113.<br><br>Bodley ’433 at 2:65–3:22<br>Display 103 can be used to provide the user with various types of information depending upon the design goals for the specific headset. The design goals are primarily based on the expected headset use, desired headset functionality, display size, display resolution, allowable headset power drain, and the processing |

| Claims | Prior Art |
| --- | --- |
| | capabilities of the headset on-board processor (also referred to as a controller or an interface controller). Examples of information that can be displayed on display 103 are headset battery level, headset signal level, call status (e.g., dialing, in use, etc.), caller identification, current time/date, and timer information such as elapsed time associated with a particular call. Display 103 can also be configured to flash or otherwise visually indicate an incoming call. Assuming that the information is provided to the headset processor, display 103 can also display the battery level of the base unit (e.g., cell phone, dongle, etc.) and the signal strength of the base unit (e.g., cell phone). Additionally, display 103 can be used during headset configuration (e.g., to adjust or set the ring mode, ring loudness, headset volume, display mode, voice dialing, time, date, etc.) or to provide additional headset functionality (e.g., phone lists, text messages, dialing using virtual numeric keypad or phone list dialing). Additionally, display 103 can be touch sensitive, thus providing a touch screen for data input (e.g., phone numbers into a phone list, dialing using a virtual numeric keypad).<br><br>The citations provided below discuss Hollemans ’490’s example disclosures with respect to this limitation.<br><br>Hollemans ’490 at 2:10–18<br>The remote controller thus gets a fixed position with respect to the user in or by the human ear. It is easy to find one's ear. This prevents looking for the remote controller. In addition, the user is not tempted to look at the remote controller, because there is nothing relevant to be seen for controlling the device. To avoid having to find tiny buttons, merely touching the remote controller somewhere on its touch-sensitive area operates said remote controller, which detects being touched and subsequently sends the control signal to the device. Also the problem of finding the proper orientation of the remote controller is solved by wearing the remote controller in or by the ear, because its orientation becomes fixed with respect to the user.<br><br>Hollemans ’490 at 2:25–33<br>Advantageously, the controller is arranged to detect a temporal pattern in the touch-sensitive area being touched, and to send the control signal in response to detecting the temporal pattern. In general, the device offers a plurality of functions and capabilities. Rather than having more buttons on the remote control that may be hard to distinguish, the single touch-sensitive area is used for controlling the plurality of functions. The temporal pattern is a particularly appropriate user interface, because it is easy to create temporal patterns in touching the area rhythmically and because the temporal patterns can constitute a natural and consistent interface. An example is a single short tap for pause/play, double short tap for next track, triple short tap for next artist/album and a long tap for adjusting the volume. |

| Claims | Prior Art |
| --- | --- |
| | Hollemans ’490 at 3:1–6<br>Advantageously, the outer surface has a further touch-sensitive area, such that the further touch-sensitive area is touched substantially by the ear when the controller is substantially worn in or by a human ear, the controller being arranged to send the control signal only if the further touch-sensitive area is touched. This will prevent the accidental remote control of the device when the remote controller is not worn, thus preventing unwanted activation of the device and unnecessary battery exhaustion.<br><br>Hollemans ’490 at FIG. 2<br> 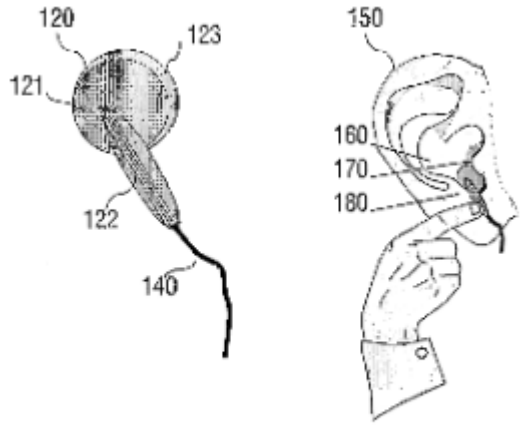 <br><br>FIG.2<br><br>The following citations show examples of where Seshadri ’839 discloses this limitation.<br><br>Seshadri ’839 at [0041]<br>Wearable earpiece 12, as shown in FIG. 5, includes antenna 46, transmit/receive switch 122, receiver module 40, data recovery module 42, speaker module 44, transmitter module 120, input module 128 and display module 132. Receiver module 40, data recovery module 42 and speaker module 44 operate as discussed with reference to FIG. 4, with the exception of the data recovery module 42, to produce display information that is provided to display module 132. For instance, the received RF signal may include display information such as caller ID, command information, etc. which is separated by data recovery module 42 and provided to |

| Claims | Prior Art |
| --- | --- |
| | display module 132, which may be an LCD display, plasma display, etc.<br><br>Seshadri ’839 at [0042]<br>Input module 128, which may be a keypad, touch screen, voice recognition circuit, or other like user interfaces, receives user commands and produces digital command messages 124 there from. Such digital command messages 124 includes, but are not limited to, packet size, synchronization information, frequency hopping initiation information, timeslot allocation information, link establishment information, piconet address information, fast-forward, play, pause, volume adjust, record, stop and rewind.<br><br>A POSITA would have been motivated to combine the teachings of Anderson ’783 and Bodley ’433 or Hollemans ’490 or Seshadri 839 to meet the claim limitations with a reasonable expectation of success. Anderson ’783 discloses that a user can control various functions and settings of an earpiece for a hearing aid system using an RPU. Anderson ’783 also discloses that the earpiece can occasionally lose connection to the RPU, in which case it can operate in a stand-alone mode. When the earpiece is operating in standalone mode, the earpiece settings (e.g., hearing aid parameters) can only be adjusted when the earpiece is being charged. Thus, Anderon ’783’s hearing aid system faces the problem of how to adjust operation of the earpiece without the RPU while the earpiece is in use. A POSITA would recognize Bodley ’433 or Hollemans ’490 or Seshadri 839 to provide a solution to this problem: providing the earpiece with a touch sensitive surface that can be used for controlling functions and settings of the earpiece.<br><br>Moreover, the devices of Anderson ’783 and Bodley ’433 or Hollemans ’490 or Seshadri 839 share various structural and functional similarities that render the inventions readily combinable. For example, both Anderson ’783 and Bodley ’433 and Hollemans ’490 and Seshadri 839 disclose ear-worn devices for providing audio output to a user. Both devices include similar components, such as microphones, speakers, wireless transceivers, and control circuitry. Accordingly, combining the teachings of Anderson ’783 and Bodley ’433 or Hollemans ’490 or Seshadri 839 would involve combining known components to yield predictable results.<br><br>To the extent that Anderson ’783 in view of Bodley ’433 does not disclose any elements of this claim limitation, it would have been obvious to a person having ordinary skill in the art to combine, with the teachings of Anderson ’783 and Bodley ’433, those elements, as known to them or as disclosed by other prior art identified in the cover pleading. |
| 34. A personal audio system as recited in claim 33, wherein the touch sensitive surface is configured to detect a user | Anderson ’783 in view of Bodley ’433 or Hollemans ’490 or Seshadri 839 expressly or inherently discloses “[a] personal audio system as recited in claim 33, wherein the touch sensitive surface is configured to detect a user |

| Claims | Prior Art |
| --- | --- |
| input, the detected user input operating to at least alter operation of the head-worn wearable electronic device. | input, the detected user input operating to at least alter operation of the head-worn wearable electronic device." The citations provided below discuss Bodley '433's example disclosures with respect to this limitation.<br><br>Bodley '433 at FIG. 1<br><br> 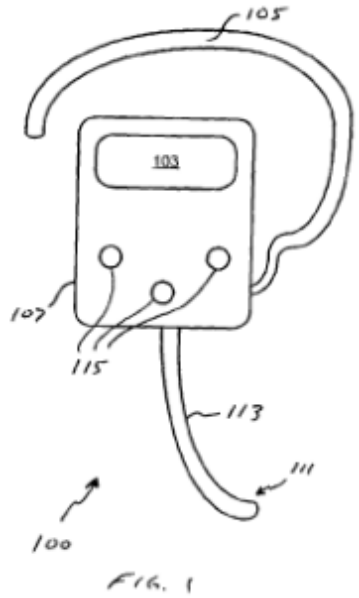 <br><br><br>Bodley '433 at 2:7–8<br>FIG. 1 is a frontal view of a generic headset that includes a display in accordance with the invention;<br><br>Bodley '433 at 2:38–50<br>Although headset 100 may use any of a variety of means of attaching to a user (e.g., headband, earpiece, etc.) and thus allowing hands-free operation of the headset, preferably headset 100 includes an earpiece 105 (e.g., an ear hook) that is coupled to the user's ear, or a portion thereof. More preferably, earpiece 105 fits around a portion of the user's ear. Earpiece 105 is coupled to body 107 of the headset, body 107 housing the various electronic components necessary to provide functionality to headset 100. Attached to the back surface of body 107 is an output transducer 109 (e.g., a speaker). Also coupled to body 107 is an input transducer 111 (e.g., a microphone), which, in this embodiment, is located at the end of a boom member 113.<br><br>Bodley '433 at 2:65–3:22<br>Display 103 can be used to provide the user with various types of information depending upon the design |

| Claims | Prior Art |
| --- | --- |
| | goals for the specific headset. The design goals are primarily based on the expected headset use, desired headset functionality, display size, display resolution, allowable headset power drain, and the processing capabilities of the headset on-board processor (also referred to as a controller or an interface controller). Examples of information that can be displayed on display 103 are headset battery level, headset signal level, call status (e.g., dialing, in use, etc.), caller identification, current time/date, and timer information such as elapsed time associated with a particular call. Display 103 can also be configured to flash or otherwise visually indicate an incoming call. Assuming that the information is provided to the headset processor, display 103 can also display the battery level of the base unit (e.g., cell phone, dongle, etc.) and the signal strength of the base unit (e.g., cell phone). Additionally, display 103 can be used during headset configuration (e.g., to adjust or set the ring mode, ring loudness, headset volume, display mode, voice dialing, time, date, etc.) or to provide additional headset functionality (e.g., phone lists, text messages, dialing using virtual numeric keypad or phone list dialing). Additionally, display 103 can be touch sensitive, thus providing a touch screen for data input (e.g., phone numbers into a phone list, dialing using a virtual numeric keypad).<br><br>In the combination of Bodley with Anderson, a POSITA would have understood the touch sensitive surface to provide at least the input functionality of Anderson's pushbuttons and/or voice control. For example, the touch sensitive surface would be used to control parameter settings such as volume, or to perform operations such as telephone dialing, as disclosed by Anderson, thereby altering operation of the head-worn device. *See* Anderson at 20:52-55, 25:15-29. These operations are consistent with behavior of the touch display in Bodley, *i.e.*, adjusting headset volume or dialing a telephone. *See* Bodley at 3:15-20.<br><br>The citations provided below discuss Hollemans '490's example disclosures with respect to this limitation.<br><br>Hollemans '490 at 2:10–18<br>The remote controller thus gets a fixed position with respect to the user in or by the human ear. It is easy to find one's ear. This prevents looking for the remote controller. In addition, the user is not tempted to look at the remote controller, because there is nothing relevant to be seen for controlling the device. To avoid having to find tiny buttons, merely touching the remote controller somewhere on its touch-sensitive area operates said remote controller, which detects being touched and subsequently sends the control signal to the device. Also the problem of finding the proper orientation of the remote controller is solved by wearing the remote controller in or by the ear, because its orientation becomes fixed with respect to the user.<br><br>Hollemans '490 at 2:25–33<br>Advantageously, the controller is arranged to detect a temporal pattern in the touch-sensitive area being touched, and to send the control signal in response to detecting the temporal pattern. In general, the device |

| Claims | Prior Art |
| --- | --- |
| | offers a plurality of functions and capabilities. Rather than having more buttons on the remote control that may be hard to distinguish, the single touch-sensitive area is used for controlling the plurality of functions. The temporal pattern is a particularly appropriate user interface, because it is easy to create temporal patterns in touching the area rhythmically and because the temporal patterns can constitute a natural and consistent interface. An example is a single short tap for pause/play, double short tap for next track, triple short tap for next artist/album and a long tap for adjusting the volume.<br><br>Hollemans ’490 at 3:1–6<br>Advantageously, the outer surface has a further touch-sensitive area, such that the further touch-sensitive area is touched substantially by the ear when the controller is substantially worn in or by a human ear, the controller being arranged to send the control signal only if the further touch-sensitive area is touched. This will prevent the accidental remote control of the device when the remote controller is not worn, thus preventing unwanted activation of the device and unnecessary battery exhaustion.<br><br>Hollemans ’490 at 3:7–10<br>Advantageously, the controller is arranged to send a further control signal to the device if the further touch-sensitive area is touched. This makes it, for example, possible for the device to pause playing music as soon as the earpiece is taken out and to resume playing music upon re-insertion.<br><br>Hollemans ’490 at 3:11–21<br>In an embodiment of the personal audio system according to the invention, the system comprises a second controller for remotely controlling the device by sending a further control signal to the device, the second controller having an outer surface with a further touch-sensitive area, the second controller being arranged to be substantially worn in or by a human ear, and the second controller being further arranged to detect a further temporal pattern in the further touch-sensitive area being touched, and to send the further control signal in response to detecting the further temporal pattern. A second controller fits in with the natural symmetry of the human head. It also considerably enhances the user interface for controlling the device. For example, the symmetry can be exploited in such a way that a long tap at the left remote controller decreases the volume, but a long tap at the right controller increases the volume. |

| Claims | Prior Art |
| --- | --- |
| | Hollemans ’490 at FIG. 3<br> <br><br>FIG.3<br>Hollemans ’490 at FIG. 4<br> <br><br>FIG.4<br>The citations provided below discuss Seshadri ’839’s example disclosures with respect to this limitation.<br>Seshadri ’839 at [0041]<br>Wearable earpiece 12, as shown in FIG. 5, includes antenna 46, transmit/receive switch 122, receiver module 40, data recovery module 42, speaker module 44, transmitter module 120, input module 128 and display module 132. Receiver module 40, data recovery module 42 and speaker module 44 operate as discussed with reference to FIG. 4, with the exception of the data recovery module 42, to produce display information that is provided to display module 132. For instance, the received RF signal may include display information such as caller ID, command information, etc. which is separated by data recovery module 42 and provided to display module 132, which may be an LCD display, plasma display, etc.<br><br>Seshadri ’839 at [0042]<br>Input module 128, which may be a keypad, touch screen, voice recognition circuit, or other like user interfaces, receives user commands and produces digital command messages 124 there from. Such digital |

| Claims | Prior Art |
|---|---|
| | command messages 124 includes, but are not limited to, packet size, synchronization information, frequency hopping initiation information, timeslot allocation information, link establishment information, piconet address information, fast-forward, play, pause, volume adjust, record, stop and rewind.<br><br>It would have been obvious to a POSITA to combine the teachings of Anderson ’783 and Bodley ’433 or Hollemans ’490 or Seshadri 839 for the reasons set forth above with respect to claim 33.<br><br>To the extent that Anderson ’783 in view of Bodley ’433 or Hollemans ’490 or Seshadri 839 does not disclose any elements of this claim limitation, it would have been obvious to a person having ordinary skill in the art to combine, with the teachings of Anderson ’783, those elements, as known to them or as disclosed by other prior art identified in the cover pleading. |
| [35a] A personal audio system as recited in claim 34, wherein the head-worn wearable electronic device is configured to support audio output to the user, and | Anderson ’783 expressly or inherently discloses “[a] personal audio system as recited in claim 34, wherein the head-worn wearable electronic device is configured to support audio output to the user.” The citations provided for element [1a] show how Anderson ’783 teaches this limitation.<br><br>*See* above at claims [1g]; [24a]; [24e].<br><br>To the extent that Anderson ’783 does not disclose any elements of this claim limitation, it would have been obvious to a person having ordinary skill in the art to combine, with the teachings of Anderson ’783, those elements, as known to them or as disclosed by other prior art identified in the cover pleading. |
| [35b] wherein the at least one operation of the head-worn electronic device being altered concerns control of the audio output being provided to the user. | Anderson ’783 in view of Bodley ’433 or Hollemans ’490 expressly or inherently discloses “wherein the at least one operation of the head-worn electronic device being altered concerns control of the audio output being provided to the user.”<br><br>*See* above at claim [34a]. For example, the touch sensitive surface would be used to control volume settings, such as headset volume. *See* Anderson at 20:52-55, 25:15-29; Bodley at 3:15-20.<br><br>The citations provided below discuss Bodley ’433’s example disclosures with respect to this limitation.<br><br>Bodley ’433 at 2:65–3:22<br>Display 103 can be used to provide the user with various types of information depending upon the design goals for the specific headset. The design goals are primarily based on the expected headset use, desired headset functionality, display size, display resolution, allowable headset power drain, and the processing capabilities of the headset on-board processor (also referred to as a controller or an interface controller). Examples of information that can be displayed on display 103 are headset battery level, headset signal level, call status (e.g., dialing, in use, etc.), caller identification, current time/date, and timer information such as elapsed time associated with a particular call. Display 103 can also be configured to flash or otherwise |

| Claims | Prior Art |
| --- | --- |
| | visually indicate an incoming call. Assuming that the information is provided to the headset processor, display 103 can also display the battery level of the base unit (e.g., cell phone, dongle, etc.) and the signal strength of the base unit (e.g., cell phone). Additionally, display 103 can be used during headset configuration (e.g., to adjust or set the ring mode, ring loudness, headset volume, display mode, voice dialing, time, date, etc.) or to provide additional headset functionality (e.g., phone lists, text messages, dialing using virtual numeric keypad or phone list dialing). Additionally, display 103 can be touch sensitive, thus providing a touch screen for data input (e.g., phone numbers into a phone list, dialing using a virtual numeric keypad).<br><br>The citations provided below discuss Hollemans ’490’s example disclosures with respect to this limitation.<br><br>Hollemans ’490 at 2:10–18<br>The remote controller thus gets a fixed position with respect to the user in or by the human ear. It is easy to find one's ear. This prevents looking for the remote controller. In addition, the user is not tempted to look at the remote controller, because there is nothing relevant to be seen for controlling the device. To avoid having to find tiny buttons, merely touching the remote controller somewhere on its touch-sensitive area operates said remote controller, which detects being touched and subsequently sends the control signal to the device. Also the problem of finding the proper orientation of the remote controller is solved by wearing the remote controller in or by the ear, because its orientation becomes fixed with respect to the user.<br><br>Hollemans ’490 at 2:25–33<br>Advantageously, the controller is arranged to detect a temporal pattern in the touch-sensitive area being touched, and to send the control signal in response to detecting the temporal pattern. In general, the device offers a plurality of functions and capabilities. Rather than having more buttons on the remote control that may be hard to distinguish, the single touch-sensitive area is used for controlling the plurality of functions. The temporal pattern is a particularly appropriate user interface, because it is easy to create temporal patterns in touching the area rhythmically and because the temporal patterns can constitute a natural and consistent interface. An example is a single short tap for pause/play, double short tap for next track, triple short tap for next artist/album and a long tap for adjusting the volume.<br><br>Hollemans ’490 at 3:1–6<br>Advantageously, the outer surface has a further touch-sensitive area, such that the further touch-sensitive area is touched substantially by the ear when the controller is substantially worn in or by a human ear, the controller being arranged to send the control signal only if the further touch-sensitive area is touched. This will prevent the accidental remote control of the device when the remote controller is not worn, thus |

| Claims | Prior Art |
|---|---|
| | preventing unwanted activation of the device and unnecessary battery exhaustion.<br><br>Hollemans ’490 at 3:7–10<br>Advantageously, the controller is arranged to send a further control signal to the device if the further touch-sensitive area is touched. This makes it, for example, possible for the device to pause playing music as soon as the earpiece is taken out and to resume playing music upon re-insertion.<br><br>Hollemans ’490 at 3:11–21<br>In an embodiment of the personal audio system according to the invention, the system comprises a second controller for remotely controlling the device by sending a further control signal to the device, the second controller having an outer surface with a further touch-sensitive area, the second controller being arranged to be substantially worn in or by a human ear, and the second controller being further arranged to detect a further temporal pattern in the further touch-sensitive area being touched, and to send the further control signal in response to detecting the further temporal pattern. A second controller fits in with the natural symmetry of the human head. It also considerably enhances the user interface for controlling the device. For example, the symmetry can be exploited in such a way that a long tap at the left remote controller decreases the volume, but a long tap at the right controller increases the volume.<br><br>Hollemans ’490 at FIG. 3<br> <br><br>FIG.3 |

| Claims | Prior Art |
| --- | --- |
| | Hollemans ’490 at FIG. 4<br> <br><br>FIG.4<br><br>A POSITA would have understood configuring the “ring mode, ring loudness, [and] headset volume” of the headset to “concern control of the audio output” being provided to the user.<br><br>It would have been obvious to a POSITA to combine the teachings of Anderson ’783 and Bodley ’433 or Hollemans ’490 for the reasons set forth above with respect to claim 33.<br><br>To the extent that Anderson ’783 in view of Bodley ’433 or Hollemans ’490 does not disclose any elements of this claim limitation, it would have been obvious to a person having ordinary skill in the art to combine, with the teachings of Anderson ’783 and Bodley ’433, those elements, as known to them or as disclosed by other prior art identified in the cover pleading. |
| 36. A personal audio system as recited in claim 24, wherein the head-worn wearable electronic device includes a force sensor configured to receive a user input based at least on sensing force applied to the force sensor. | Anderson ’783 in view of Abreu ’960 or Irvin ’332 expressly or inherently discloses “[a] personal audio system as recited in claim 24, wherein the head-worn wearable electronic device includes a force sensor configured to receive a user input based at least on sensing force applied to the force sensor.”<br><br>The following citations show examples of where Abreu ’960 discloses this limitation. *See, e.g. id.* at 15:60–63.<br><br>Abreu ’960 at 15:60–65<br>By way of illustration, but not of limitation, pressuse sensing means can be incorporated in the end of the temples to detect if the sunglasses are being worn, and an abrupt drop in the pressure signal indicates glasses were removed or misplacement of the sensor can also generate an identifiable signal.<br><br>The following citations show examples of where Irvin ’332 discloses this limitation.<br><br>Irvin ’332 at 6:34–48<br>FIG. 4E illustrates the power control circuit 210 coupled to an alternate type of attitude sensor 220. In this embodiment, the attitude sensor 220 is a mechanical sensor that includes a contacting member 224 |

| Claims | Prior Art |
| --- | --- |
| | responsive to a physical orientation of the sensor 220. In one or more physical orientations, the contacting member 224 does not electrically connect the first and second contacts of attitude sensor 220. In one or more other physical orientations, the contacting member places the first and second contacts of attitude sensor 220 in electrical connection. The power control circuit 210 is configured to be responsive to this electrical connection. Contacting member 224 may be resiliently biased away from one or both contacts to ensure an open electrical connection between contacts when the headset is not oriented in a position indicative of use.<br><br>*See also* Irvin at FIGS. 1, 4C, 6, 7; 4:3-10, 4:39-49, 6:3-33, 8:11-9:39.<br><br>The pressure sensing means can receive a user input indicating that the user is wearing the glasses, based at least on sensing pressure applied to the pressure sensing means. A POSITA would have understood the "pressure sensing means" to teach a "force sensor," at least since a POSITA would have understood a pressure sensor to determine pressure as a function of force.<br><br>A POSITA would have been motivated to combine the teachings of Anderson '783 and Abreu '960 or Irvin '332 to meet the claim limitations with a reasonable expectation of success for the reasons described above with respect to claim 23.<br><br>To the extent that Anderson '783 in view of Abreu '960 or Irvin '332 does not disclose any elements of this claim limitation, it would have been obvious to a person having ordinary skill in the art to combine, with the teachings of Anderson '783, those elements, as known to them or as disclosed by other prior art identified in the cover pleading. |
| 37. A personal audio system as recited in claim 36, wherein the force sensor is configured to detect the user input, the detected user input operating to alter at least an operation of the head-worn wearable electronic device. | Anderson '783 in view of Abreu '960 or Irvin '332 expressly or inherently discloses "[a] personal audio system as recited in claim 36, wherein the force sensor is configured to detect the user input, the detected user input operating to alter at least an operation of the head-worn wearable electronic device."<br><br>The following citations show examples of where Abreu '960 discloses this limitation. *See, e.g. id.* at 15:60–65.<br><br>Abreu '960 at 15:60–65<br>By way of illustration, but not of limitation, pressuse sensing means can be incorporated in the end of the temples to detect if the sunglasses are being worn, and an abrupt drop in the pressure signal indicates glasses were removed or misplacement of the sensor can also generate an identifiable signal.<br><br>The following citations show examples of where Irvin '332 discloses this limitation.<br><br>Irvin '332 at 2:20–34<br>The wireless headset serves as a communication accessory to a base unit, such as a cellular telephone. When not in use, the wireless headset reverts to an inactive state and draws essentially no power. A power control |

| Claims | Prior Art |
| --- | --- |
| | circuit imparts automatic enabling capability to the wireless headset. Preferably, the power control circuit employs a sensor responsive to a natural stimulus associated with a person preparing to use the wireless headset. The wireless headset may sense motion, physical orientation, or user proximity. Sensing techniques include but are not limited to micro-electro-mechanical-systems (MEMS), mercury switches, attitude switches, and IR or acoustic proximity sensors. In some embodiments, the wireless headset transitions from the inactive state to an active state in response to a user picking it up or mounting the wireless headset upon their head.<br><br>Irvin ’332 at 6:34–48<br>FIG. 4E illustrates the power control circuit 210 coupled to an alternate type of attitude sensor 220. In this embodiment, the attitude sensor 220 is a mechanical sensor that includes a contacting member 224 responsive to a physical orientation of the sensor 220. In one or more physical orientations, the contacting member 224 does not electrically connect the first and second contacts of attitude sensor 220. In one or more other physical orientations, the contacting member places the first and second contacts of attitude sensor 220 in electrical connection. The power control circuit 210 is configured to be responsive to this electrical connection. Contacting member 224 may be resiliently biased away from one or both contacts to ensure an open electrical connection between contacts when the headset is not oriented in a position indicative of use.<br><br>Irvin ’332 at 8:11–22<br>FIGS. 6 and 7 illustrate operation of the wireless headset 100. FIG. 6 is a state diagram for one exemplary embodiment of the present invention. When the wireless headset 100 is not in use, it automatically enters an inactive state (610). As explained, this inactive state may constitute disconnecting the communications circuit 230 from the power source 240, or may simply represent placing the communications circuit 230 in a non-functional, low-power condition. Absent user stimulus, such as motion of the wireless headset 100 or placement of the wireless headset 100 upon the user's body, the wireless headset 100 remains in the inactive state (610).<br><br>*See also* Irvin at FIG. 1; 6:3-13. These elements correspond to headset components of Anderson (*e.g.*, earpiece 22, headset 21), such that in combination with Anderson, the contact switch will be activated when the user places the headset on his or her head. A POSITA would have understood the contact switch to be a force sensor configured to detect user input (*i.e.*, application of force against the switch by the user’s head), consistent with the ’693 patent’s characterization of such mechanical switches as force sensors. *See* ’693 patent at 103:22-47; FIGS. 78, 79. The user input alters an operation of the combined head-worn apparatus, at least by causing transitions between states as described for claim 36[A]. |

| Claims | Prior Art |
| --- | --- |
| | Abreu ’960 discloses that the pressure sensing means is configured to “detect if the sunglasses are being worn” and that “an abrupt drop in the pressure signal indicates glasses were removed” and can cause the eyeglasses to “generate an identifiable signal.” Thus, a user input (a reduction in pressure applied to the pressure sensing means) can alter operation of the eyeglasses by causing the eyeglasses to generate an identifiable signal.<br><br>A POSITA would have been motivated to combine the teachings of Anderson ’783 and Abreu ’960 or Irvin ’332 to meet the claim limitations with a reasonable expectation of success for the reasons described above with respect to claim 23.<br><br>To the extent that Anderson ’783 in view of Abreu ’960 or Irvin ’332 does not disclose any elements of this claim limitation, it would have been obvious to a person having ordinary skill in the art to combine, with the teachings of Anderson ’783 and Abreu ’960, those elements, as known to them or as disclosed by other prior art identified in the cover pleading. |
| 38[a] A personal audio system as recited in claim 37, wherein the head-worn wearable electronic device is configured to support audio output to the user, and | Anderson ’783 expressly or inherently discloses “[a] personal audio system as recited in claim 37, wherein the head-worn wearable electronic device is configured to support audio output to the user.” The citations provided above for Anderson ’783 for element [1a] show examples of where Anderson ’783 discloses this limitation.<br><br>*See* above at claims [1g]; [24a]; [24e].<br><br>A POSITA would have been motivated to combine the teachings of Anderson ’783 to meet the claim limitations with a reasonable expectation of success for the reasons described above with respect to claim 23.<br><br>To the extent that Anderson ’783 does not disclose any elements of this claim limitation, it would have been obvious to a person having ordinary skill in the art to combine, with the teachings of Anderson ’783, those elements, as known to them or as disclosed by other prior art identified in the cover pleading. |
| [38b] wherein the at least one operation of the head-worn electronic device being altered concerns control of the audio output being provided to the user. | Anderson ’783 in view of Abreu ’960 or Irvin ’332 expressly or inherently discloses “wherein the at least one operation of the head-worn electronic device being altered concerns control of the audio output being provided to the user.”<br><br>*See* above at claim [23b].<br><br>Abreu ’960 discloses that the eyeglasses can “send a signal if the eyeglasses were removed,” which can be detected based on “an abrupt drop in the pressure signal.” *See id.* at 15:57-63. Abreu ’960 further discloses that signals produced by the apparatus can be reported “by audio, visual or tactile means.” *See id.* at 19:25-26. Thus, the operation of Abreu ’960’s eyeglasses that is altered based on a detected user input to a force sensor can be the generation or cessation of an audio signal. A POSITA would have understood this to “concern” control of the audio output being provided to the user in that it dictates whether or not audio is being output. |

| Claims | Prior Art |
| --- | --- |
| | Similarly, Irvin discloses that entering an "inactive state" upon determining that the device has been removed from the user's body, and that the device is "non-functional" in the low-power state. Irvin '332 at 8:11–22. A POSITA would understand that that the operation being altered based on the sensed data from Irvin's sensor includes terminating audio output provided to a user.<br>*See also* above at claim [35b], [23].<br><br>A POSITA would have been motivated to combine the teachings of Anderson '783 and Abreu '960 or Irvin '332 to meet the claim limitations with a reasonable expectation of success for the reasons described above with respect to claim 23.<br>To the extent that Anderson '783 in view of Abreu '960 or Irvin '332 does not disclose any elements of this claim limitation, it would have been obvious to a person having ordinary skill in the art to combine, with the teachings of Anderson '783, those elements, as known to them or as disclosed by other prior art identified in the cover pleading. |
| 42[pre]. A personal audio system as recited in claim 24, wherein the head-worn wearable electronic device comprises: | Anderson '783, expressly or inherently discloses the preamble for the same reasons as previously set forth for claim 24.<br>*See* above at claim 1[pre].<br>To the extent that Anderson '783 does not disclose any elements of this claim limitation, it would have been obvious to a person having ordinary skill in the art to combine, with the teachings of Anderson '783, those elements, as known to them or as disclosed by other prior art identified in the cover pleading. |
| [42a] a first head-worn structure including at least a first speaker of the pair of speakers, the first speaker being wearable proximate to a first ear of the user; and | Anderson '783 expressly or inherently discloses "a first head-worn structure including at least a first speaker of the pair of speakers, the first speaker being wearable proximate to a first ear of the user." For example, Anderson '783 discloses that the earpiece of a hearing aid can be "worn in the ear," as shown in FIG. 1, or behind the ear, or as part of headset 21, and that the earpiece includes a speaker. *See, e.g.,* FIGS. 1, 2.<br>*See* above at claim [24a].<br>The following citations show examples of where Anderson '783 discloses this limitation.<br>Anderson '783 at 3:52–4:14<br>One preferred embodiment of the invention herein described is shown in block diagram form in FIG. 1. In this figure, the earpiece 10 shown worn in the ear 11 uses a standard completely-in-the-canal (CIC) housing, |

| Claims | Prior Art |
| --- | --- |
| | well known in the art, although many other earpiece housing types known in the art (e.g., behind-the-ear, or BTE) can be used. The earpiece shown in FIG. 1 comprises a microphone 12, RF transceiver 13 with an antenna that doubles as an earpiece extractor 14, and speaker 15. Although the dual-use antenna/extractor arrangement shown in FIG. 1 is often desirable, a separate antenna or antennae can be used in conjunction with many different types of earpiece extractors as appropriate for a particular application. Antennae and extractors can be disguised as ear hair or jewelry (e.g., earrings), or conductive filaments can be permanently implanted in the ear cartilage to act as antennae using a process similar to ear piercing. The earpiece 10 communicates with a remote processor unit (RPU) 16 via a primary two-way RF link 17, although many other wireless link media (e.g., ultrasonic or infrared) may be used instead. The RPU is typically worn under clothing (e.g., carried in a pocket or purse), but may also be worn in plain sight (e.g., on a belt) if desired. The RPU 16 may be connected (via wired or wireless means 18) to optional secondary wireless link circuitry 19 that allows wireless communication between the RPU and other sources of information (e.g., the general subscriber telephone network) via a secondary wireless link. Note that the optional secondary wireless link circuitry 19 may or may not be contained within the RPU case 70 of FIG. 7.<br><br>Anderson ’783 at 4:30–33<br>Although the system described here is monaural, it will be clear to those skilled in the art that a binaural (stereo) system can be constructed based on the same principles as the monaural system.<br><br>To the extent that Anderson ’783 does not disclose any elements of this claim limitation, it would have been obvious to a person having ordinary skill in the art to combine, with the teachings of Anderson ’783, those elements, as known to them or as disclosed by other prior art identified in the cover pleading. |
| [42b] a second head-worn structure including at least a second speaker of the pair of speakers, the second speaker being wearable proximate to a second ear of the user. | Anderson ’783 expressly or inherently discloses “a second head-worn structure including at least a second speaker of the pair of speakers, the second speaker being wearable proximate to a second ear of the user.” For example, Anderson ’783 discloses that a hearing aid system can be a “binaural (stereo) system.” *See id.* at 4:30-33. A POSITA would have understood this to mean that Anderson’s hearing aid system can include a second earpiece, and thus a second speaker, to be worn in or near the user’s other ear, for example, when the earpiece is part of headset 21.<br><br>*See* above at claim [24a].<br><br>The following citations show examples of where Anderson ’783 discloses this limitation.<br><br>Anderson ’783 at 3:52–4:14<br>One preferred embodiment of the invention herein described is shown in block diagram form in FIG. 1. In |

| Claims | Prior Art |
|---|---|
| | this figure, the earpiece 10 shown worn in the ear 11 uses a standard completely-in-the-canal (CIC) housing, well known in the art, although many other earpiece housing types known in the art (e.g., behind-the-ear, or BTE) can be used. The earpiece shown in FIG. 1 comprises a microphone 12, RF transceiver 13 with an antenna that doubles as an earpiece extractor 14, and speaker 15. Although the dual-use antenna/extractor arrangement shown in FIG. 1 is often desirable, a separate antenna or antennae can be used in conjunction with many different types of earpiece extractors as appropriate for a particular application. Antennae and extractors can be disguised as ear hair or jewelry (e.g., earrings), or conductive filaments can be permanently implanted in the ear cartilage to act as antennae using a process similar to ear piercing. The earpiece 10 communicates with a remote processor unit (RPU) 16 via a primary two-way RF link 17, although many other wireless link media (e.g., ultrasonic or infrared) may be used instead. The RPU is typically worn under clothing (e.g., carried in a pocket or purse), but may also be worn in plain sight (e.g., on a belt) if desired. The RPU 16 may be connected (via wired or wireless means 18) to optional secondary wireless link circuitry 19 that allows wireless communication between the RPU and other sources of information (e.g., the general subscriber telephone network) via a secondary wireless link. Note that the optional secondary wireless link circuitry 19 may or may not be contained within the RPU case 70 of FIG. 7.<br><br>Anderson ’783 at 4:30–33<br>Although the system described here is monaural, it will be clear to those skilled in the art that a binaural (stereo) system can be constructed based on the same principles as the monaural system.<br><br>To the extent that Anderson ’783 does not disclose any elements of this claim limitation, it would have been obvious to a person having ordinary skill in the art to combine, with the teachings of Anderson ’783, those elements, as known to them or as disclosed by other prior art identified in the cover pleading. |
| 43[pre]. A personal audio system as recited in claim 42, wherein the first head-worn structure comprises: | Anderson ’783 in view of Jannard ’526 expressly or inherently discloses this limitation, as explained above for element [1pre] and its incorporated citations.<br><br>*See* above at claims 1[pre]; [24a].<br><br>It would have been obvious to a POSITA to combine the teachings of Anderson ’783 and Jannard ’526 for the reasons set forth above with respect to claim 26.<br><br>To the extent that Anderson ’783 in view of Jannard ’526, does not disclose any elements of this claim limitation, it would have been obvious to a person having ordinary skill in the art to combine, with the teachings of Anderson ’783 in view of Jannard ’526, those elements, as known to them or as disclosed by other prior art identified in the cover pleading. |

| Claims | Prior Art |
|---|---|
| 43[a] a first circuit board internal to the first head-worn structure, | Anderson ’783 in view of Jannard ’526 expressly or inherently discloses this limitation, as explained above for element [31] and its incorporated citations.<br><br>*See* above at claim 31.<br><br>For example, Jannard ’526 discloses an audio device including “a printed circuit board 284 [that] includes one switch for each of the buttons 73c, 73d, and 73e” and “an audio file storage and playback device 286.” *See id.* at 13:51-55. The printed circuit board is configured to be received by an “internal cavity” of the eyeglasses. *See id.* at 13:50-51.<br><br>It would have been obvious to a POSITA to combine the teachings of Anderson ’783 and Jannard ’526 for the reasons set forth above with respect to claim 26.<br><br>To the extent that Anderson ’783 in view of Jannard ’526, does not disclose any elements of this claim limitation, it would have been obvious to a person having ordinary skill in the art to combine, with the teachings of Anderson ’783 in view of Jannard ’526, those elements, as known to them or as disclosed by other prior art identified in the cover pleading. |
| 43[b] the first circuit board supporting at least a first integrated circuit and a second integrated circuit, the first integrated circuit and the second integrated circuit being physically attached to the first circuit board, | Anderson ’783 in view of Jannard ’526 expressly or inherently discloses this limitation, as explained above for element [31] and its incorporated citations.<br><br>*See* above at claim 31.<br><br>For example, Anderson ’783 discloses that “all earpiece functions (e.g., power control for the 60 MHz oscillator 835) are controlled by a custom application-specific integrated circuit (ASIC).” *See id.* at 12:38-41.<br><br>To the extent that Anderson ’783 alone does not teach that the first integrated circuit and a second integrated circuit are supported by and physically attached to the first circuit board, this element is met by Anderson ’783 combined with Jannard ’526. For example, as explained above, Jannard ’526 discloses that a printed circuit board can support multiple elements, such as “one switch for each of the buttons 73c, 73d, and 73e” and “an audio file storage and playback device 286.” *See id.* at 13:51-55. The printed circuit board “includes” these elements, such that they are physically attached to the printed circuit board. *See id.* at 13:53-54.<br><br>It would have been obvious to a POSITA to combine the teachings of Anderson ’783 and Jannard ’526 for the reasons set forth above with respect to claim 26.<br><br>To the extent that Anderson ’783 in view of Jannard ’526, does not disclose any elements of this claim limitation, it would have been obvious to a person having ordinary skill in the art to combine, with the teachings of Anderson ’783 in view of Jannard ’526, those elements, as known to them or as disclosed by other prior art identified in the cover pleading. |

| Claims | Prior Art |
|---|---|
| 43[c] and the first integrated circuit being electrically connected to the second integrated circuit or another electronic component. | Anderson ’783 expressly or inherently discloses “the first integrated circuit being electrically connected to the second integrated circuit or another electronic component.” The following citations show examples of where Anderson ’783 discloses connection of the ASIC to other components.<br><br>Anderson ’783 at FIG. 8<br><br> 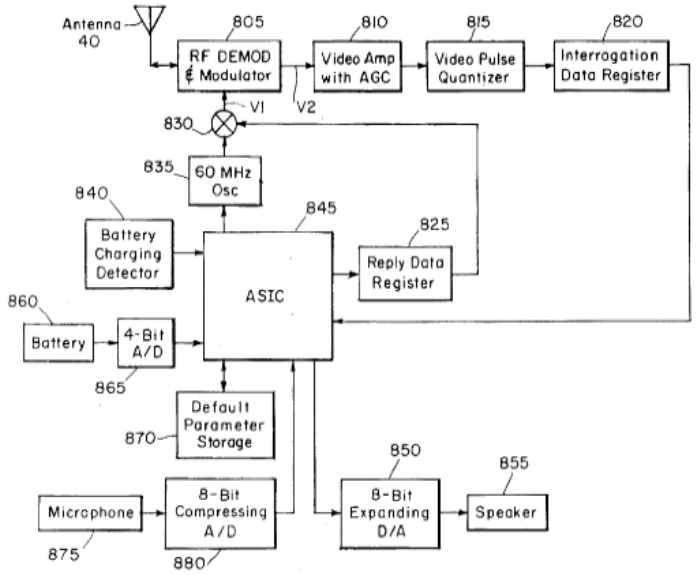 <br><br>FIG. 8<br><br>Anderson ’783 at 3:40–41<br>FIG. 8 is a block diagram showing details of an earpiece for a full-featured preferred embodiment of the invention.<br><br>Anderson ’783 at 4:30–33<br>Although the system described here is monaural, it will be clear to those skilled in the art that a binaural (stereo) system can be constructed based on the same principles as the monaural system.<br><br>Anderson ’783 at 12:38–46<br>Note that all earpiece functions (e.g., power control for the 60 MHz oscillator 835) are controlled by a custom application-specific integrated circuit (ASIC) 845. The ASIC 845 may be a low-power low-voltage device similar, e.g., to the ECI Semiconductor P576 custom programmable linear/digital gate array. Many of the functions that are shown as separate blocks for clarity in FIG. 8, e.g., reply data register 825, may be |

| Claims | Prior Art |
|---|---|
| | implemented within the ASIC 845.<br><br>To the extent that Anderson ’783, does not disclose any elements of this claim limitation, it would have been obvious to a person having ordinary skill in the art to combine, with the teachings of Anderson ’783, those elements, as known to them or as disclosed by other prior art identified in the cover pleading. |
| 44. A personal audio system as recited in claim 43, wherein the first circuit board is a flexible circuit board. | Anderson ’783 in view of Jannard ’526 expressly or inherently discloses “[a] personal audio system as recited in claim 43, wherein the first circuit board is a flexible circuit board,” as explained above for claim 32. *See* Jannard ’526 at 13:51–55; 26:26–27.<br><br>*See* above at claims 32, 43.<br><br>It would have been obvious to a POSITA to combine the teachings of Anderson ’783 and Jannard ’526 for the reasons set forth above with respect to claim 26.<br><br>To the extent that Anderson ’783 in view of Jannard ’526, does not disclose any elements of this claim limitation, it would have been obvious to a person having ordinary skill in the art to combine, with the teachings of Anderson ’783 in view of Jannard ’526, those elements, as known to them or as disclosed by other prior art identified in the cover pleading. |
| 45[pre]. A personal audio system as recited in claim 42, wherein the first head-worn structure comprises: | Anderson ’783 expressly or inherently discloses “[a] personal audio system as recited in claim 42, wherein the first head-worn structure comprises” for the reasons explained above for element [1pre].<br><br>*See* above at claim 1[pre]; 24[pre]; [24a].<br><br>To the extent that Anderson ’783 does not disclose any elements of this claim limitation, it would have been obvious to a person having ordinary skill in the art to combine, with the teachings of Anderson, those elements, as known to them or as disclosed by other prior art identified in the cover pleading. |
| [45a] a user input device, the user input device being configured to receive a user input, the user input device is based on at least capacitive effect, wherein the user input being received induces at least a capacitive change to produce at least an electrical response. | Anderson ’783 in view of Bodley ’433 and Zadesky ’230 or Hollemans ’490 or Seshadri expressly or inherently discloses “a user input device, the user input device being configured to receive a user input, the user input device is based on at least capacitive effect, wherein the user input being received induces at least a capacitive change to produce at least an electrical response.” The following citations show examples of where Zadesky ’230 discloses this limitation.<br><br>Zadesky ’230 at 2:16–59<br>With regards to touch pads, mice and track balls, a Cartesian coordinate system is used to monitor the position of the finger, mouse and ball, respectively, as they are moved. The Cartesian coordinate system is generally defined as a two dimensional coordinate system (x, y) in which the coordinates of a point (e.g., |

| Claims | Prior Art |
| --- | --- |
| | position of finger, mouse or ball) are its distances from two intersecting, often perpendicular straight lines, the distance from each being measured along a straight line parallel to each other. For example, the x, y positions of the mouse, ball and finger may be monitored. The x, y positions are then used to correspondingly locate and move the input pointer on the display screen.<br>To elaborate further, touch pads generally include one or more sensors for detecting the proximity of the finger thereto. By way of example, the sensors may be based on resistive sensing, surface acoustic wave sensing, pressure sensing (e.g., strain gauge), optical sensing, capacitive sensing and the like. The sensors are generally dispersed about the touch pad with each sensor representing an x, y position. In most cases, the sensors are arranged in a grid of columns and rows. Distinct x and y position signals, which control the x, y movement of a pointer device on the display screen, are thus generated when a finger is moved across the grid of sensors within the touch pad. For brevity sake, the remaining discussion will be held to the discussion of capacitive sensing technologies. It should be noted, however, that the other technologies have similar features.<br>Capacitive sensing touch pads generally contain several layers of material. For example, the touch pad may include a protective shield, one or more electrode layers and a circuit board. The protective shield typically covers the electrode layer(s), and the electrode layer(s) is generally disposed on a front side of the circuit board. As is generally well known, the protective shield is the part of the touch pad that is touched by the user to implement cursor movements on a display screen. The electrode layer(s), on the other hand, is used to interpret the x, y position of the user's finger when the user's finger is resting or moving on the protective shield. The electrode layer (s) typically consists of a plurality of electrodes that are positioned in columns and rows so as to form a grid array. The columns and rows are generally based on the Cartesian coordinate system and thus the rows and columns correspond to the x and y directions.<br>Zadesky ’230 at 2:60–3:5<br>The touch pad may also include sensing electronics for detecting signals associated with the electrodes. For example, the sensing electronics may be adapted to detect the change in capacitance at each of the electrodes as the finger passes over the grid. The sensing electronics are generally located on the backside of the circuit board. By way of example, the sensing electronics may include an application specific integrated circuit (ASIC) that is configured to measure the amount of capacitance in each of the electrodes and to compute the position of finger movement based on the capacitance in each of the electrodes. The ASIC may also be configured to report this information to the computing device.<br>Zadesky ’230 at 3:6–22<br>Referring to FIG. 1, a touch pad 10 will be described in greater detail. The touch pad is generally a small rectangular area that includes a protective shield 12 and a plurality of electrodes 14 disposed underneath the |

| Claims | Prior Art |
| --- | --- |
| | protective shield layer 12. For case of discussion, a portion of the protective shield layer 12 has been removed to show the electrodes 14. Each of the electrodes 14 represents a different x, y position. In one configuration, as a finger 16 approaches the electrode grid 14, a tiny capacitance forms between the finger 16 and the electrodes 14 proximate the finger 16. The circuit board/sensing electronics measures capacitance and produces an x, y input signal 18 corresponding to the active electrodes 14 is sent to a host device 20 having a display screen 22. The x, y input signal 18 is used to control the movement of a cursor 24 on a display screen 22. As shown, the input pointer moves in a similar x, y direction as the detected x, y finger motion.<br><br>Zadesky ’230 at 12:31–41<br>The capacitance in each of the electrodes 258 is measured by control circuitry 260 located on the backside of the circuit board 256. By detecting changes in capacitance at each of the electrodes 258, the control circuitry 260 can determine the angular location, direction, speed and acceleration of the finger as it is moved across the touch pad 250. The control circuitry 260 can also report this information in a form that can be used by a computing device. By way of example, the control circuitry may include an ASIC (application specific integrated circuit).<br><br>*See also* Zadesky at 5:61-6:8; 10:40-51. A POSITA would have understood Zadesky’s “finger moving across the surface” to disclose a sliding action.<br><br>The following citations show examples of where Bodley ’433 discloses this limitation. |

| Claims | Prior Art |
| --- | --- |
| | Bodley ’433 at FIG. 1<br> 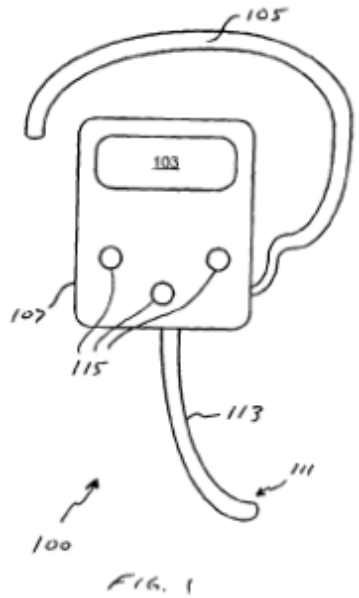 <br><br>Bodley ’433 at 2:7–8<br>FIG. 1 is a frontal view of a generic headset that includes a display in accordance with the invention;<br><br>Bodley ’433 at 2:38–50<br>Although headset 100 may use any of a variety of means of attaching to a user (e.g., headband, earpiece, etc.) and thus allowing hands-free operation of the headset, preferably headset 100 includes an earpiece 105 (e.g., an ear hook) that is coupled to the user's ear, or a portion thereof. More preferably, earpiece 105 fits around a portion of the user's ear. Earpiece 105 is coupled to body 107 of the headset, body 107 housing the various electronic components necessary to provide functionality to headset 100. Attached to the back surface of body 107 is an output transducer 109 (e.g., a speaker). Also coupled to body 107 is an input transducer 111 (e.g., a microphone), which, in this embodiment, is located at the end of a boom member 113.<br><br>Bodley ’433 at 2:65–3:22<br>Display 103 can be used to provide the user with various types of information depending upon the design goals for the specific headset. The design goals are primarily based on the expected headset use, desired headset functionality, display size, display resolution, allowable headset power drain, and the processing |

| Claims | Prior Art |
| --- | --- |
| | capabilities of the headset on-board processor (also referred to as a controller or an interface controller). Examples of information that can be displayed on display 103 are headset battery level, headset signal level, call status (e.g., dialing, in use, etc.), caller identification, current time/date, and timer information such as elapsed time associated with a particular call. Display 103 can also be configured to flash or otherwise visually indicate an incoming call. Assuming that the information is provided to the headset processor, display 103 can also display the battery level of the base unit (e.g., cell phone, dongle, etc.) and the signal strength of the base unit (e.g., cell phone). Additionally, display 103 can be used during headset configuration (e.g., to adjust or set the ring mode, ring loudness, headset volume, display mode, voice dialing, time, date, etc.) or to provide additional headset functionality (e.g., phone lists, text messages, dialing using virtual numeric keypad or phone list dialing). Additionally, display 103 can be touch sensitive, thus providing a touch screen for data input (e.g., phone numbers into a phone list, dialing using a virtual numeric keypad).<br><br>Hollemans ’490 at Abstract<br>In a personal audio system (100), a remote controller (120) has a touch-sensitive area (122) and is worn in or by a human ear. A temporal pattern in the area (122), which is being touched, is detected and used for remotely controlling a device (110) for personal audio by means of a control signal (130). This prevents the hassle involved in finding, manipulating and operating a conventional remote control that is typically dangling somewhere along a wire.<br><br>Hollemans ’490 at 4:30–5:7<br>The outer surface 121 is just the physical outer side of the controller 120. A part of this outer surface 121 is sensitive to being touched and is referred to as the touch-sensitive area 122. Optionally, the controller 120 comprises a second area that is sensitive to being touched, referred to as the further touch-sensitive area 123. The touch-sensitive area 122 can be realized in many ways, including a sensor for changes in capacity or induced voltages or currents, a grid of conducting parts between which changes in resistance are measured and detected, or an ordinary pressure sensor, button or temperature sensor. Another possibility is to measure and detect changes in either a passive or an active electromagnetic field. With the passive variant, the controller 120 relies on, for example, nearby power lines to generate measurable fields when being touched. With the active variant, the controller 120 generates an electromagnetic field of its own.<br><br>Hollemans ’490 at 8:19–22<br>In a third way, the touch-sensitive area is used for picking up a gesture made on the area with e.g. a stylus or a finger. The remote control may be extended for this purpose with means for detecting a gesture, e.g. a laser |

| Claims | Prior Art |
|---|---|
| | beetle, a small camera, an IR movement sensor, or a cross-capacitance sensor.<br><br>Hollemans ’490 at 8:30–33<br>The gesture detected may be a user defined gesture for activating a user defined function. The gesture detected may be used for user identification by matching with initials or an autograph. The gesture may extend into two dimensions, e.g. a planar gesture, or it may extend into three dimensions.<br><br>Seshadri ’839 at [0041]<br>Wearable earpiece 12, as shown in FIG. 5, includes antenna 46, transmit/receive switch 122, receiver module 40, data recovery module 42, speaker module 44, transmitter module 120, input module 128 and display module 132. Receiver module 40, data recovery module 42 and speaker module 44 operate as discussed with reference to FIG. 4, with the exception of the data recovery module 42, to produce display information that is provided to display module 132. For instance, the received RF signal may include display information such as caller ID, command information, etc. which is separated by data recovery module 42 and provided to display module 132, which may be an LCD display, plasma display, etc.<br><br>Seshadri ’839 at [0042]<br>Input module 128, which may be a keypad, touch screen, voice recognition circuit, or other like user interfaces, receives user commands and produces digital command messages 124 there from. Such digital command messages 124 includes, but are not limited to, packet size, synchronization information, frequency hopping initiation information, timeslot allocation information, link establishment information, piconet address information, fast-forward, play, pause, volume adjust, record, stop and rewind.<br><br>A POSITA would have understood Bodley’433’s or Holleman’s or Zadesky’s or Seshadri’s touch sensitive display to be a user input device configured to receive a user input.<br><br>To the extent that Anderson ’783 and Bodley ’433 alone do not disclose that the user input device is based on capacitive effect, wherein the user input being received induces at least a capacitive change to produce at least an electrical response, this element is met by Anderson ’783 in view of Bodley ’433 and Zadesky ’230 or Hollemans ’490 or Seshadri’s in view of the disclosures above.<br><br>For example, Zadesky ’230 discloses a capacitive sensing touch pad and that a capacitive sensing touch pad includes a protective shield layer that is touched by a user to implement cursor movements on a display screen and an electrode layer for interpreting the position of the user’s finger when the finger is resting or moving on the protective shield. Zadesky ’230 further discloses that the touch pad includes “sensing electronics for |

| Claims | Prior Art |
| --- | --- |
| | detecting signals associated with the electrodes" that can "measure the amount of capacitance in each of the electrodes," "compute the position of finger movement based on the capacitance in each of the electrodes," and "report this information to [a] computing device." The computing device can use this information to control movement of a cursor on a display screen. A POSITA would have understood Zadesky '230's capacitive sensing touch pad to be "based on a capacitive effect." Further, a POSITA would have understood moving a finger along the capacitive sensing touch pad in order to control movement of a cursor on a display screen to be a user input that "induce[s] at least a capacitive change to produce at least an electrical response."<br><br>A POSITA would have been motivated to combine the teachings of Anderson '783, Bodley '433, and Zadesky '230 or Hollemans '490 or Seshadri's to meet the claim limitations with a reasonable expectation of success. For example, as described above for claim 33, Anderson '783 discloses that a user can control various functions and settings of an earpiece for a hearing aid system but faces the problem of how to adjust operation of the earpiece during use when the RPU, which is typically used to control operation of the earpiece, is disconnected. The POSITA would recognize Bodley '433 or Zadesky or Hollemans or Seshadri's to provide a solution to this problem: providing the earpiece with a touch sensitive surface that can be used for controlling functions and settings of the earpiece.<br><br>Moreover, a POSITA would be motivated to use Zadesky '230's or Hollemans '490's capacitive sensing touch pad in the modified Anderson '783-Bodley '433 system. Bodley '433 already discloses that a display for controlling settings and functions of an earpiece can include a touch sensitive surface. A POSITA thus would have been motivated to look to other references to supply these missing details. A POSITA would have been motivated to look to Zadesky '230 or Hollemans '490 at least because it is in the same general field of endeavor as Anderson '783 and Bodley '433. As discussed above, both Anderson '783 and Bodley '433 disclose head-worn devices for providing audio output to a user. Zadesky '230 discloses a media player that is "dedicated to processing media such as audio" and "allow[s] a user to listen to music." Zadesky '230 is therefore from the same general field of endeavor as Anderson '783 and Bodley '433—providing audio output to a user. Thus, a POSITA would have been motivated to combine the teachings of these references with a reasonable expectation of success. A POSITA would have been motivated to combine the teachings of Anderson with Hollemans or or Seshadri with a reasonable expectation of success for similar reasons.<br><br>To the extent that Anderson '783, Bodley '433, and Zadesky '230 or Hollemans '490 or Seshadri's does not disclose any elements of this claim limitation, it would have been obvious to a person having ordinary skill in the art to combine, with the teachings of Anderson '783, those elements, as known to them or as disclosed by other prior art identified in the cover pleading. |

| Claims | Prior Art |
| --- | --- |
| 46. A personal audio system as recited in claim 45, wherein the user input device is configured to distinguish at least a direction of the user input with respect to the user input device. | Anderson ’783 in view of Zadesky ’230 or Hollemans expressly or inherently discloses “[a] personal audio system as recited in claim 45, wherein the user input device is configured to distinguish at least a direction of the user input with respect to the user input device.”<br><br>The following citations show examples of where Zadesky ’230 discloses this limitation.<br><br>Zadesky ’230 at 2:16–59<br>With regards to touch pads, mice and track balls, a Cartesian coordinate system is used to monitor the position of the finger, mouse and ball, respectively, as they are moved. The Cartesian coordinate system is generally defined as a two dimensional coordinate system (x, y) in which the coordinates of a point (e.g., position of finger, mouse or ball) are its distances from two intersecting, often perpendicular straight lines, the distance from each being measured along a straight line parallel to each other. For example, the x, y positions of the mouse, ball and finger may be monitored. The x, y positions are then used to correspondingly locate and move the input pointer on the display screen.<br>To elaborate further, touch pads generally include one or more sensors for detecting the proximity of the finger thereto. By way of example, the sensors may be based on resistive sensing, surface acoustic wave sensing, pressure sensing (e.g., strain gauge), optical sensing, capacitive sensing and the like. The sensors are generally dispersed about the touch pad with each sensor representing an x, y position. In most cases, the sensors are arranged in a grid of columns and rows. Distinct x and y position signals, which control the x, y movement of a pointer device on the display screen, are thus generated when a finger is moved across the grid of sensors within the touch pad. For brevity sake, the remaining discussion will be held to the discussion of capacitive sensing technologies. It should be noted, however, that the other technologies have similar features.<br>Capacitive sensing touch pads generally contain several layers of material. For example, the touch pad may include a protective shield, one or more electrode layers and a circuit board. The protective shield typically covers the electrode layer(s), and the electrode layer(s) is generally disposed on a front side of the circuit board. As is generally well known, the protective shield is the part of the touch pad that is touched by the user to implement cursor movements on a display screen. The electrode layer(s), on the other hand, is used to interpret the x, y position of the user's finger when the user's finger is resting or moving on the protective shield. The electrode layer (s) typically consists of a plurality of electrodes that are positioned in columns and rows so as to form a grid array. The columns and rows are generally based on the Cartesian coordinate system and thus the rows and columns correspond to the x and y directions.<br><br>Zadesky ’230 at 12:31–41<br>The capacitance in each of the electrodes 258 is measured by control circuitry 260 located on the backside of the circuit board 256. By detecting changes in capacitance at each of the electrodes 258, the control circuitry 260 can determine the angular location, direction, speed and acceleration of the finger as it is moved across |

| Claims | Prior Art |
| --- | --- |
| | the touch pad 250. The control circuitry 260 can also report this information in a form that can be used by a computing device. By way of example, the control circuitry may include an ASIC (application specific integrated circuit).<br><br>*See also* Zadesky at 6:38-59.<br><br>The following citations show examples of where Hollemans ’490 discloses this limitation.<br><br>Hollemans ’490 at 8:19–22<br>In a third way, the touch-sensitive area is used for picking up a gesture made on the area with e.g. a stylus or a finger. The remote control may be extended for this purpose with means for detecting a gesture, e.g. a laser beetle, a small camera, an IR movement sensor, or a cross-capacitance sensor.<br><br>Hollemans ’490 at 8:30–33<br>The gesture detected may be a user defined gesture for activating a user defined function. The gesture detected may be used for user identification by matching with initials or an autograph. The gesture may extend into two dimensions, e.g. a planar gesture, or it may extend into three dimensions.<br><br>A POSITA would have been motivated to combine the teachings of Anderson ’783, Bodley ’433, and Zadesky ’230 or Hollemans to meet the claim limitations with a reasonable expectation of success for the reasons described above with respect to claim 45.<br><br>To the extent that Anderson ’783 and Zadesky ’230 or Hollemans does not disclose any elements of this claim limitation, it would have been obvious to a person having ordinary skill in the art to combine, with the teachings of Anderson ’783, those elements, as known to them or as disclosed by other prior art identified in the cover pleading. |
| 47. A personal audio system as recited in claim 46, wherein the user input device is configured to detect at least a sliding of a finger action with respect to the user input device. | Anderson ’783 in view of Zadesky ’230 or ollemans ’490 expressly or inherently discloses “[a] personal audio system as recited in claim 45, wherein the user input device is configured to distinguish at least a direction of the user input with respect to the user input device.”<br><br>*See* above at claim [45a].<br><br>The following citations show examples of where Zadesky ’230 discloses this limitation. |

| Claims | Prior Art |
| --- | --- |
| | Zadesky ’230 at FIG. 8<br> 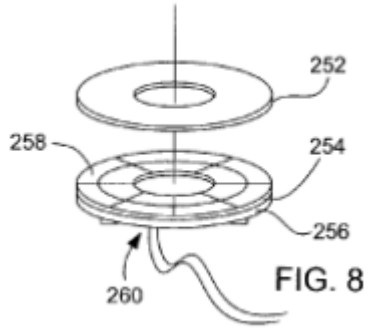 <br><br>FIG. 8<br>Zadesky ’230 at 11:50–12:20<br>FIG. 8 is a partially broken away perspective view of an annular capacitive touch pad 250, in accordance with one embodiment of the present invention. By way of example, the annular capacitive touch pad 250 may correspond to the touch pad of FIG. 2. The annular capacitive touch pad 250 is arranged to detect changes in capacitance as the user swirls an object such as a finger around the touch pad 250. The annular capacitive touch pad 250 is also arranged to detect changes in capacitance as the user moves their finger radially across the touch pad 250. The annular capacitive touch pad 250 is formed from various layers including at least a label layer 252, an electrode layer 254 and a circuit board 256. The label layer 252 is disposed over the electrode layer 254 and the electrode layer 254 is disposed over the circuit board 256. At least the label 252 and electrode layer 254 are annular such that they are defined by concentric circles, i.e., they have an inner perimeter and an outer perimeter. The circuit board 256 is generally a circular piece having an outer perimeter that coincides with the outer perimeter of the label 252 and electrode layer 254. It should be noted, however, that in some cases the circuit board 256 may be annular or the label 252 and electrode layer 254 may be circular.<br>The label layer 252 serves to protect the underlayers and to provide a surface for allowing a finger to slide thereon. The surface is generally smooth so that the finger does not stick to it when moved. The label layer 252 also provides an insulating layer between the finger and the electrode layer 254. The electrode layer 254 includes a plurality of spatially distinct electrodes 258 that have positions based on the polar coordinate system. For instance, the electrodes 258 are positioned both angularly and radially on the circuit board 256 such that each of the electrodes 258 defines a distinct angular and radial position thereon. Any suitable number of electrodes 258 may be used. In most cases, it would be desirable to increase the number of electrodes 258 so as to provide higher resolution, i.e., more information can be used for things such as acceleration. |

| Claims | Prior Art |
| --- | --- |
| | Hollemans ’490 at 8:19–22<br>In a third way, the touch-sensitive area is used for picking up a gesture made on the area with e.g. a stylus or a finger. The remote control may be extended for this purpose with means for detecting a gesture, e.g. a laser beetle, a small camera, an IR movement sensor, or a cross-capacitance sensor.<br><br>Hollemans ’490 at 8:30–33<br>The gesture detected may be a user defined gesture for activating a user defined function. The gesture detected may be used for user identification by matching with initials or an autograph. The gesture may extend into two dimensions, e.g. a planar gesture, or it may extend into three dimensions.<br><br>A POSITA would have been motivated to combine the teachings of Anderson ’783, and Zadesky ’230 or Hollemans ’490 to meet the claim limitations with a reasonable expectation of success for the reasons described above with respect to claim 45.<br><br>To the extent that Anderson ’783 and Zadesky ’230 or Hollemans ’490 does not disclose any elements of this claim limitation, it would have been obvious to a person having ordinary skill in the art to combine, with the teachings of Anderson ’783, those elements, as known to them or as disclosed by other prior art identified in the cover pleading |
| 48. A personal audio system as recited in claim 45, wherein the user input device is configured to distinguish at least whether the user input pertains to a forward sliding action or a backward sliding action with respect to the user input device. | Anderson ’783 in view of Zadesky ’230 or Hollemans ’490 expressly or inherently discloses “[a] personal audio system as recited in claim 45, wherein the user input device is configured to distinguish at least whether the user input pertains to a forward sliding action or a backward sliding action with respect to the user input device.”<br><br>*See* above at claim [47].<br><br>The following citations show examples of where Zadesky ’230 discloses this limitation. |

| Claims | Prior Art |
|---|---|
| | Zadesky ’230 at FIG. 3C<br> 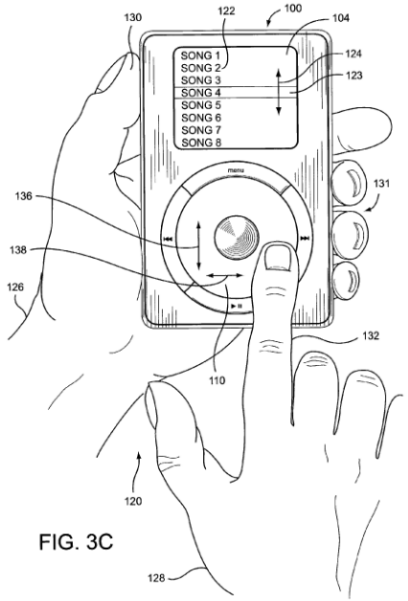 <br><br>FIG. 3C<br><br>Zadesky ’230 at 7:28–44<br>The touch pad generally consists of a touchable outer surface 111 for receiving a finger for manipulation on the touch pad 110. Although not shown in FIG. 2, beneath the touchable outer surface 111 is a sensor arrangement. The sensor arrangement includes a plurality of sensors that are configured to activate as the finger passes over them. In the simplest case, an electrical signal is produced each time the finger passes a sensor. The number of signals in a given time frame may indicate location, direction, speed and acceleration of the finger on the touch pad, i.e., the more signals, the more the user moved his or her finger. In most cases, the signals are monitored by an electronic interface that converts the number, combination and frequency of the signals into location, direction, speed and acceleration information. This information may then be used by the media player 100 to perform the desired control function on the display screen 104.<br><br>Zadesky ’230 at 8:52–67<br>FIGS. 3A-3C show the media player 100 of FIG. 2 being used by a user 120, in accordance with different embodiments of the invention. In all of these embodiments, the user 120 is linearly scrolling 104 (as shown by arrow 124) through a list of songs 122 displayed on the display screen via a slider bar 123. As shown, the media device 100 is comfortably held by one hand 126 while being comfortably addressed by the other hand |

| Claims | Prior Art |
| --- | --- |
| | 128. This configuration generally allows the user 120 to easily actuate the touch pad 110 with one or more fingers. For example, the thumb 130 and rightmost fingers 131 (or leftmost fingers if left handed) of the first hand 126 are used to grip the sides of the media player 100 while a finger 132 of the opposite hand 128 is used to actuate the touch pad 110. As shown, the entire top surface of the touch pad 110 is accessible to the user's finger 130.<br><br>Zadesky ’230 at 9:16–21<br>Referring to FIG. 3C, and in accordance with one embodiment of the invention, the user 120 can slide his or her finger 132 substantially tangentially from all sides of the touch pad 110. For example, the touch pad 110 may be actuated forwards and backwards as shown by arrows 136 and side to side by arrows 138.<br><br>Zadesky ’230 at 11:50–12:20<br>FIG. 8 is a partially broken away perspective view of an annular capacitive touch pad 250, in accordance with one embodiment of the present invention. By way of example, the annular capacitive touch pad 250 may correspond to the touch pad of FIG. 2. The annular capacitive touch pad 250 is arranged to detect changes in capacitance as the user swirls an object such as a finger around the touch pad 250. The annular capacitive touch pad 250 is also arranged to detect changes in capacitance as the user moves their finger radially across the touch pad 250. The annular capacitive touch pad 250 is formed from various layers including at least a label layer 252, an electrode layer 254 and a circuit board 256. The label layer 252 is disposed over the electrode layer 254 and the electrode layer 254 is disposed over the circuit board 256. At least the label 252 and electrode layer 254 are annular such that they are defined by concentric circles, i.e., they have an inner perimeter and an outer perimeter. The circuit board 256 is generally a circular piece having an outer perimeter that coincides with the outer perimeter of the label 252 and electrode layer 254. It should be noted, however, that in some cases the circuit board 256 may be annular or the label 252 and electrode layer 254 may be circular.<br>The label layer 252 serves to protect the underlayers and to provide a surface for allowing a finger to slide thereon. The surface is generally smooth so that the finger does not stick to it when moved. The label layer 252 also provides an insulating layer between the finger and the electrode layer 254. The electrode layer 254 includes a plurality of spatially distinct electrodes 258 that have positions based on the polar coordinate system. For instance, the electrodes 258 are positioned both angularly and radially on the circuit board 256 such that each of the electrodes 258 defines a distinct angular and radial position thereon. Any suitable number of electrodes 258 may be used. In most cases, it would be desirable to increase the number of electrodes 258 so as to provide higher resolution, i.e., more information can be used for things such as acceleration. |

| Claims | Prior Art |
| --- | --- |
| | Hollemans ’490 at 8:19–22<br>In a third way, the touch-sensitive area is used for picking up a gesture made on the area with e.g. a stylus or a finger. The remote control may be extended for this purpose with means for detecting a gesture, e.g. a laser beetle, a small camera, an IR movement sensor, or a cross-capacitance sensor.<br><br>Hollemans ’490 at 8:30–33<br>The gesture detected may be a user defined gesture for activating a user defined function. The gesture detected may be used for user identification by matching with initials or an autograph. The gesture may extend into two dimensions, e.g. a planar gesture, or it may extend into three dimensions.<br><br>A POSITA would have been motivated to combine the teachings of Anderson ’783 and Zadesky ’230 or Hollemans to meet the claim limitations with a reasonable expectation of success for the reasons described above with respect to claim 45.<br><br>To the extent that Anderson ’783 and Zadesky ’230 or Hollemans does not disclose any elements of this claim limitation, it would have been obvious to a person having ordinary skill in the art to combine, with the teachings of Anderson ’783, those elements, as known to them or as disclosed by other prior art identified in the cover pleading. |
| [49a] A personal audio system as recited in claim 48, wherein the head-worn wearable electronic device comprises: a second circuit board internal to the second head-worn structure, | Anderson ’783 in view of Jannard ’526 expressly or inherently discloses “[a] personal audio system as recited in claim 48, wherein the head-worn wearable electronic device comprises: a second circuit board internal to the second head-worn structure.”<br><br>*See* above at claim [31].<br><br>The following citations show examples of where Jannard ’526 discloses this limitation. |

| Claims | Prior Art |
|---|---|
| | Jannard ’526 at FIG. 3J<br> 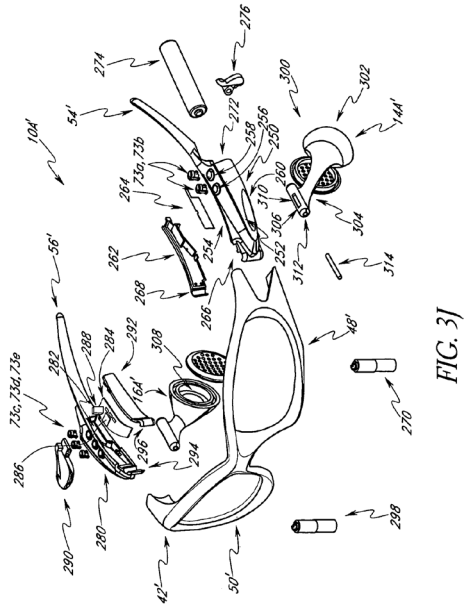 <br>Jannard ’526 at 3:56–58<br>FIG. 3J is a front, top, and left side perspective and exploded view of the wearable audio device illustrated in FIG. 3D.<br><br>Jannard ’526 at 12:62–13:6<br>A cover member 262 cooperates with the housing 250 to define the closed internal cavity 252. In the illustrated embodiment, the internal cavity 252 includes at least one compartment configured to receive an electronic circuit board 264 which includes at least one switch for each of the buttons 73a, 73b. In an exemplary but non-limiting embodiment, the board 264 can include two switches, one for each of the buttons 73a, 73b, which are configured to control a volume output from the speakers 14A′, 16A′. The cover 262 can be attached to the ear stems 54A′ with any type of fastener, such as, for example, but without limitation, screws, rivets, bolts, adhesive, and the like.<br><br>Jannard ’526 at 13:50–55<br>The internal cavity 282, in the illustrated embodiment, is configured to receive a printed circuit board 284. In the illustrated embodiment, the printed circuit board 284 includes one switch for each of the buttons 73c, |

| Claims | Prior Art |
| --- | --- |
| | 73d, and 73e. Additionally, the printed circuit board 284 includes an audio file storage and playback device 286.<br><br>A POSITA would have understood from these disclosures that the printed circuit board is internal to the head–worn structure.<br><br>A POSITA would have been motivated to combine the teachings of Anderson ’783 Jannard to meet the claim limitations with a reasonable expectation of success, as discussed above for 49[B], Jannard ’526 discloses well-known components (printed circuit boards) for supporting circuitry. While Anderson ’783 discloses that an integrated circuit can be connected to various other electronic components of an earpiece, it would have been obvious to a POSITA to look to Jannard to supply these missing details, since Jannard is also directed to a head-worn device that supports audio output. Furthermore, Anderson ’783 and Jannard ’526 are not incompatible because each reference relates to providing audio output to a user. For example, Anderson ’783 and Jannard ’526 each disclose head-worn devices for providing audio output to a user. Thus, the POSITA would have been motivated to combine the teachings of these references with a reasonable expectation of success.<br><br>To the extent that Anderson ’783 and Jannard ’526 does not disclose any elements of this claim limitation, it would have been obvious to a person having ordinary skill in the art to combine, with the teachings of Anderson ’783, those elements, as known to them or as disclosed by other prior art identified in the cover pleading. |
| [49b] the second circuit board supporting at least a third integrated circuit and a fourth integrated circuit, the third integrated circuit and the fourth integrated circuit being physically attached to the second circuit board, and | Anderson ’783 expressly or inherently discloses “[a] personal audio system as recited in claim 48, wherein the head-worn wearable electronic device comprises: a second circuit board internal to the second head-worn structure.”<br><br>*See* above at claim 43.<br><br>The following citations show examples of where Anderson ’783 discloses this limitation. |

| Claims | Prior Art |
|---|---|
| | Anderson ’783 at FIG. 8 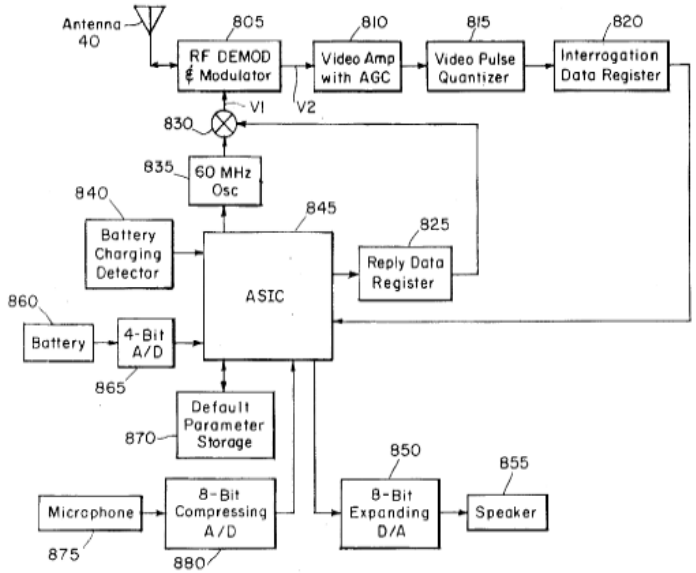  FIG. 8<br><br>Anderson ’783 at 3:40–41<br>FIG. 8 is a block diagram showing details of an earpiece for a full-featured preferred embodiment of the invention.<br><br>Anderson ’783 at 12:38–46<br>Note that all earpiece functions (e.g., power control for the 60 MHz oscillator 835) are controlled by a custom application-specific integrated circuit (ASIC) 845. The ASIC 845 may be a low-power low-voltage device similar, e.g., to the ECI Semiconductor P576 custom programmable linear/digital gate array. Many of the functions that are shown as separate blocks for clarity in FIG. 8, e.g., reply data register 825, may be implemented within the ASIC 845.<br><br>The ASIC is connected to other components of Anderson’s earpiece, and physically attaching an integrated circuit to a circuit board was well known to a POSITA at the time of the invention. Further, given that Anderson ’783’s ASIC is connected to multiple other electronic components of the earpiece as shown in FIG. 8, the POSITA would have been motivated to attach Anderson ’783’s ASIC to a circuit board as disclosed in Jannard ’526 in order to facilitate connection of the ASIC to the other electronic components. Moreover, it was |

| Claims | Prior Art |
| --- | --- |
| | well known by the effective filing date that multiple integrated circuits can be disposed on a circuit board. Thus, attaching a second ASIC to a circuit board would involve combining known elements to achieve a predictable result.<br><br>To the extent that Anderson ’783 does not disclose any elements of this claim limitation, it would have been obvious to a person having ordinary skill in the art to combine, with the teachings of Anderson ’783, those elements, as known to them or as disclosed by other prior art identified in the cover pleading. |
| [49c] the third integrated circuit being electrically connected to the fourth integrated circuit or another electronic component. | Anderson ’783 expressly or inherently discloses “the third integrated circuit being electrically connected to the fourth integrated circuit or another electronic component.” The following citations show examples of where Anderson ’783 discloses this limitation. The citations above for element [49B] also disclose this limitation.<br><br>*See* above at claims 43[c]; 49[b].<br><br>The ASIC in Anderson ’783 is connected to other components of Anderson 783’’s earpiece, and physically attaching an integrated circuit to a circuit board was well known to a POSITA at the time of the invention. Further, given that Anderson ’783’s ASIC is connected to multiple other electronic components of the earpiece as shown in FIG. 8, the POSITA would have been motivated to attach Anderson ’783’s ASIC to a circuit board as disclosed in Jannard ’526 in order to facilitate connection of the ASIC to the other electronic components. Moreover, it was well known by the effective filing date that multiple integrated circuits can be disposed on a circuit board. Thus, attaching a second ASIC to a circuit board would involve combining known elements to achieve a predictable result.<br><br>To the extent that Anderson ’783 does not disclose any elements of this claim limitation, it would have been obvious to a person having ordinary skill in the art to combine, with the teachings of Anderson ’783, those elements, as known to them or as disclosed by other prior art identified in the cover pleading. |
| 50[pre]. A personal audio system as recited in claim 42, wherein the first head-worn structure of the head-worn wearable electronic device comprises: | Anderson ’783 expressly or inherently discloses “[a] personal audio system as recited in claim 42, wherein the first head-worn structure of the head-worn wearable electronic device,” for example, for the reasons explained above for claim 42.<br><br>*See* above at claims 1[pre]; 24[pre].<br><br>To the extent that Anderson ’783 does not disclose any elements of this claim limitation, it would have been obvious to a person having ordinary skill in the art to combine, with the teachings of Anderson ’783, those elements, as known to them or as disclosed by other prior art identified in the cover pleading. |
| [50a] a first microphone configured to pick up at least | Anderson ’783, alone or in view of Nemirovski ’379 expressly or inherently discloses “a first microphone configured to pick up at least audio input from at least the user, the first microphone being at least partially in the |

| Claims | Prior Art |
| --- | --- |
| audio input from at least the user, the first microphone being at least partially in the first head-worn structure and is positioned to be directed towards the user when the first head-worn structure is being worn by the user; and | first head-worn structure and is positioned to be directed towards the user when the first head-worn structure is being worn by the user."<br><br>As described above, a POSITA would have incorporated Nemirovski's microphone teachings into Anderson's head-worn structure at 21, such that the earpiece includes analogous microphones to improve speech detection and noise cancellation.<br><br>The citations provided below discuss Anderson '783's example disclosures with respect to this limitation.<br><br>Anderson '783 at FIG. 1<br><br> 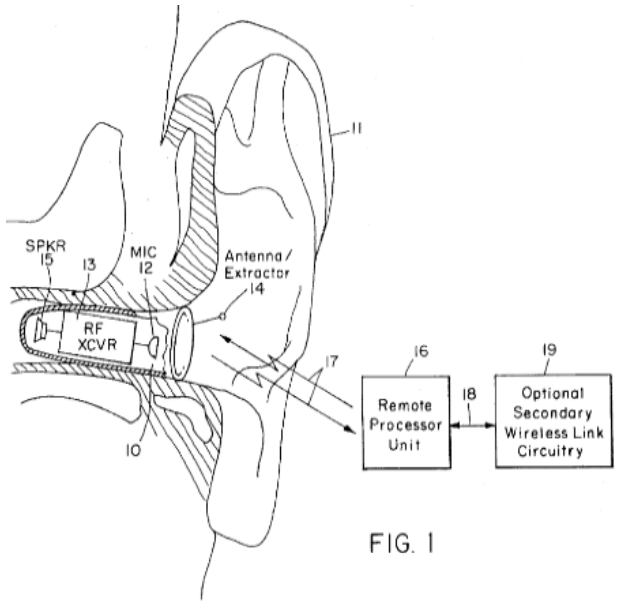 <br><br>FIG. 1<br><br>Anderson '783 at 3:52–4:14<br>One preferred embodiment of the invention herein described is shown in block diagram form in FIG. 1. In this figure, the earpiece 10 shown worn in the ear 11 uses a standard completely-in-the-canal (CIC) housing, well known in the art, although many other earpiece housing types known in the art (e.g., behind-the-ear, or BTE) can be used. The earpiece shown in FIG. 1 comprises a microphone 12, RF transceiver 13 with an antenna that doubles as an earpiece extractor 14, and speaker 15. Although the dual-use antenna/extractor arrangement shown in FIG. 1 is often desirable, a separate antenna or antennae can be used in conjunction with many different types of earpiece extractors as appropriate for a particular application. Antennae and extractors can be disguised as ear hair or jewelry (e.g., earrings), or conductive filaments can be permanently implanted in the ear cartilage to act as antennae using a process similar to ear piercing. The earpiece 10 |

| Claims | Prior Art |
| --- | --- |
| | communicates with a remote processor unit (RPU) 16 via a primary two-way RF link 17, although many other wireless link media (e.g., ultrasonic or infrared) may be used instead. The RPU is typically worn under clothing (e.g., carried in a pocket or purse), but may also be worn in plain sight (e.g., on a belt) if desired. The RPU 16 may be connected (via wired or wireless means 18) to optional secondary wireless link circuitry 19 that allows wireless communication between the RPU and other sources of information (e.g., the general subscriber telephone network) via a secondary wireless link. Note that the optional secondary wireless link circuitry 19 may or may not be contained within the RPU case 70 of FIG. 7.<br><br>Anderson ’783 at 5:3–21<br>During normal operation, speech signals from a nearby talker (and other signals in the ambient audio environment) are picked up by the earpiece wireless microphone 20 and transmitted to the RPU FM receiver 24. The RPU FM receiver 24 output level may be adjusted using the RPU FM receiver 24 volume control. The resulting electrical waveform representing signals from the nearby talker travels through the DPDT switch 25, which is set to the lower position as shown in FIG. 2, to the signal enhancer 26. The signal enhancer 26 may be, for example, a voice changer device that varies the pitch of a received speech signal according to the setting of pushbutton controls located on the RPU signal enhancer 26. The speech signal's pitch can then be raised or lowered as desired to help compensate for a user's hearing loss relative to a particular talker's voice characteristics. The modified speech signal travels from the RPU signal enhancer 26 to the RPU FM transmitter 27, and finally to the earpiece headset 21 receiver where the signal is converted to acoustic waves heard by the user.<br><br>Anderson ’783 at 6:8–25<br>The user's voice (and other signals in the ambient audio environment) is picked up by the earpiece wireless microphone 20, transmitted to the RPU 23 FM receiver 24, sent through the DPDT switch 25 to the microphone input of the handset 28 (the handset's microphone transducer may be removed) and transmitted on the secondary wireless link 29 to, e.g., the general subscriber telephone network. Signals from the secondary wireless link 29 are received by the handset 28, sent from the speaker output of the handset 28 (the handset's speaker may be removed) via the DPDT switch 25 to the signal enhancer 26, FM transmitter 27 and finally to the earpiece headset 21 receiver where the signals are converted to acoustic waves heard by the user. Note that the RPU 23 may also include straight-forward connections to a "personal digital assistant" computer, or voice-operated devices connected to the FM receiver 24 output and not shown in FIG. 2.<br><br>Anderson ’783 at 22:11–61<br>Stand-alone earpiece operation: If an earpiece cannot communicate with an RPU for any reason, stand-alone |

| Claims | Prior Art |
|---|---|
| | earpiece operation as a CIC hearing aid is generally desirable. Examples include occasions where the RPU must be turned off by pushing the RPU power-off key 78 (e.g., situations where operation of wireless transmitters is prohibited such as aircraft takeoffs and classified military briefings), RPU battery or other RPU electronics failure, misplacement of an RPU, and primary wireless link 17 interference. Note that a microphone located in the earpiece 10 is preferred to a body-worn microphone, since only an earpiece microphone 12 can be used to provide the desired default CIC hearing aid function (earpiece microphones also provide superior audio localization capabilities as the microphone moves with the user's head, and provide reduced wind and clothing noise compared with body-worn microphones). Parameters that control the stand-alone earpiece operation are stored in the earpiece CIC default parameter storage 870, which is accessed by the ASIC 845 to implement the desired stand-alone functions as described earlier. CIC default parameters include, but are not limited to, settings for the nominal and maximum allowable earpiece volume. Other information contained in the default parameter storage 870 includes, but is not limited to, the communication address and L/R (left/right) selection bit. To ensure that the CIC default parameter storage information cannot be changed inadvertently, changes are only allowed when the earpiece is not in use as, for example, when the earpiece battery 860 is being charged. A battery charging detector 840, that is sensitive to the high-level magnetic induction fields commonly used for earpiece battery charging, indicates to the ASIC 845 that the default parameter storage 870 values may be changed upon receipt of an appropriate command from the RPU. Specifically, to change information in the earpiece CIC default parameter storage 870, a user first activates the earpiece battery charging system, e.g., by placing the earpiece in a recharger/storage tray well known in the art. The RPU keyboard 946 is then used to enter a command to the DSP 948 that indicates the user's desire to change information in the default parameter storage 870, followed by the new information to be stored. The DSP 948 causes the RPU to transmit an interrogation with a reserved address code to which all earpieces being charged within the communication range of the RPU are receptive. The information that is to ultimately be loaded into the earpiece default parameter storage 870 is then transmitted by the RPU using the auxiliary bit field of many successive interrogations, said interrogations are received by the earpiece, and the desired information is loaded into the CIC default parameter storage 870 under control of the ASIC 845.<br><br>Anderson ’783 at 22:61–23:35<br>Details of normal system operation: During normal operation of the hearing aid with wireless remote processor, sounds from the ambient environment are picked up by a microphone 12 in the earpiece 10 and transmitted with other information (e.g., data representing the earpiece battery 860 voltage as obtained by an A/D 865 converter and transmitted under control of the earpiece ASIC 845 in the auxiliary bit of many successive replies via the reply data register 825) over a primary two-way wireless link 17 to the RPU 16, where the audio signals are enhanced according to the user's needs by the RPU DSP 948. Signal |

| Claims | Prior Art |
|---|---|
| | enhancement is achieved via any of a number of techniques well known in the art that use the capabilities of the general-purpose RPU DSP 948. The enhanced audio signals may be combined with other information (e.g., a synthesized voice, generated within the DSP 948, warning that the aforementioned earpiece battery voltage is low) and transmitted from the RPU 16 over the primary wireless link 17 to the earpiece 10, where they are converted by a speaker 15 to sounds that can only be heard by the user 11. Art auxiliary speaker can be supplied in the RPU 16 as a peripheral 950 device that allows people other than the user to hear the same sounds as those produced by the earpiece speaker 15, if desired (as, e.g., when a person other than the user wishes to use the system's optional cellular telephone capabilities). A different, optional secondary two-way wireless link (shown as part of the RPU in FIG. 9 as secondary wireless link circuitry 944, or connected to the RPU by a wired or other, e.g. infrared, wireless link 18 and shown as optional secondary wireless link circuitry 19 in FIG. 1) can be used for communication between the RPU and a cellular telephone system or other sources of information. An RPU keyboard suitable for covert data entry 72, or voice recognition capabilities in the RPU (implemented, e.g., using any of a number of techniques well known in the art that use the general-purpose RPU DSP 948), can be used to control hearing aid parameters (such as amplification level set by the RPU DSP 948) and telephone dialing functions (e.g., automatic dialing of a predefined telephone number using information stored in the RPU DSP 948) in a manner that can be made imperceptible to a casual observer if desired.<br><br>Anderson ’783 at 23:36–42<br>Binaural, directional noise-canceling hearing aid with hearing protection: Two earpieces (one in each ear) and an RPU can be used in a binaural, directional noise-canceling hearing aid system with hearing protection features. Such a system provides some measure of protection for the residual hearing capability of a hearing-impaired user simultaneous with the hearing aid function.<br><br>Anderson ’783 at 25:29–30<br>The verbal commands are received as audio signals by the earpiece 10 and transmitted to the RPU 16.<br><br>Anderson ’783 at 26:54–65<br>Secondary link audio considerations: In some applications, a user may not wish to transmit signals from the ambient audio environment over the secondary wireless link. In such cases, an auxiliary earpiece microphone which favors the "bone conduction" path over the normal "air path" between the user's mouth and ear can be used. To save space, the auxiliary microphone may be housed in the same miniature case as the primary earpiece microphone. Alternatively, when two earpieces are used, unwanted ambient sources can be "nulled out" in the RPU DSP 948 by digital signal processing techniques well known in the art (e.g., the equivalent |

| Claims | Prior Art |
|---|---|
| | of speakerphone circuitry).<br><br>Anderson ’783 at 26:65–67<br>Note that such binaural signal processing techniques can also provide directivity and background noise cancellation for users<br><br>Anderson ’783 at 27:1–3<br>having total hearing loss in one ear and partial loss in the other ear, as discussed earlier in connection with binaural hearing aid system operation.<br><br>*See also* Anderson at FIG. 2; 4:25-49; 23:19-26, 24:45-25:50.<br><br>To the extent that Anderson ’783 is found not to disclose this limitation, Nemirovski ’379 discloses this limitation, for example, in the disclosures below.<br><br>Nemirovski ’379 at FIG. 5<br> 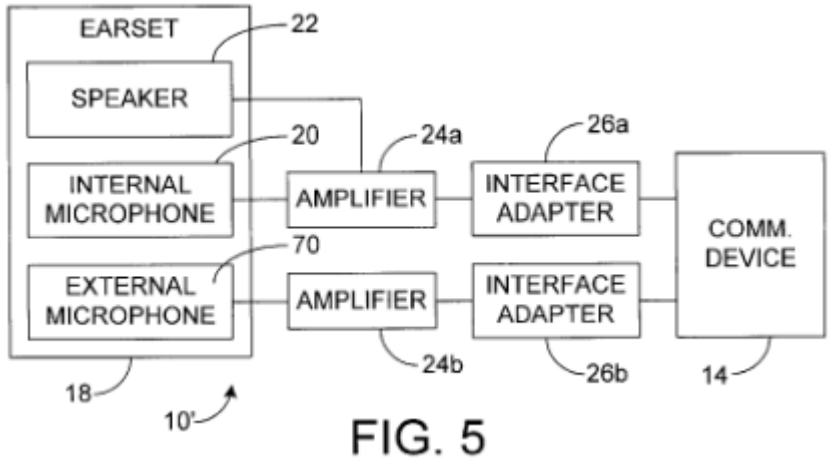 <br><br>FIG. 5<br><br>Nemirovski ’379 at 2:59–60<br>FIG. 5 is a block diagram of an ear microphone assembly according to another aspect of the invention; and<br><br>Nemirovski ’379 at 3:6–23<br>The present invention is directed to a communication system, including a communications device and an ear |

| Claims | Prior Art |
|---|---|
| | microphone, or earset, assembly. The communications system allows a user to speak with a remotely located person. The ear microphone assembly, also referred to herein as an earset, includes a microphone and a speaker supported by a housing. The housing is retained by the ear of the user and allows for hands free use of the communication system while carrying on a conversation with the remotely located person. The microphone is directed towards the ear canal of the user and detects sounds emanating or coming out of the ear (or air pressure changes occurring within the ear) to accurately and reliably detect the speech of the user. The position of the microphone may also help to reduce detection of externally generated sounds. The ear microphone assembly allows for separation of a speech input device for a cellular, or wireless, telephone from an RF transceiver of the telephone.<br><br>Nemirovski ’379 at 9:45–60<br>FIG. 5 is a block diagram that illustrates a system 10′ for detecting speech of the user. The system 10′ includes the earset 18 having the internal microphone 20, the speaker 22 and amplifier 24a as described in greater detail above. In addition, the earset 18 of the system 10′ has the external microphone 70. As one skilled in the art will appreciate, the use of the external microphone 70 is optional. The external microphone 70 is disposed on the housing 30 (FIG. 3) and generally points away from the person wearing the earset 18. As a result, the external microphone 70 detects air pressure changes located outside the ear. These air pressure changes are mainly the result of externally generated noise (other people's speech, environmental noise, etc.) and, in part, to the speech of the person wearing the earset 18, when the speech travels from the mouth of the user and through the air to the external microphone 70.<br><br>That is, Nemirovski ’379 discloses an earset having an internal microphone that is “directed towards the ear canal of the user and detects sounds emanating or coming out of the ear (or air pressure changes occurring within the ear) to accurately and reliably detect the speech of the user.” *See id.* at 3:15–18; 9:46–50; FIG. 5.<br><br>A POSITA would have been motivated to combine the teachings of Anderson ’783 and Nemirovski ’379 for the reasons set forth with respect to claim 11.<br><br>To the extent that Anderson ’783 and Nemirovski ’379, does not disclose any elements of this claim limitation, it would have been obvious to a person having ordinary skill in the art to combine, with the teachings of Anderson ’783, those elements, as known to them or as disclosed by other prior art identified in the cover pleading. |
| [50b] a second microphone configured to pick up at least ambient sound input associated | Anderson ’783, alone or in view of Nemirovski ’379 expressly or inherently discloses expressly or inherently discloses “a second microphone configured to pick up at least ambient sound input associated with an environment in the vicinity of the first head-worn structure, the second microphone being positioned to be |

| Claims | Prior Art |
| --- | --- |
| with an environment in the vicinity of the first head-worn structure, the second microphone being positioned to be directed away from the user when the head-worn wearable electronic device is being worn by the user. | directed away from the user when the head-worn wearable electronic device is being worn by the user." The citations provided below discuss Anderson '783's example disclosures with respect to this limitation.<br>Anderson '783 at FIG. 1<br> 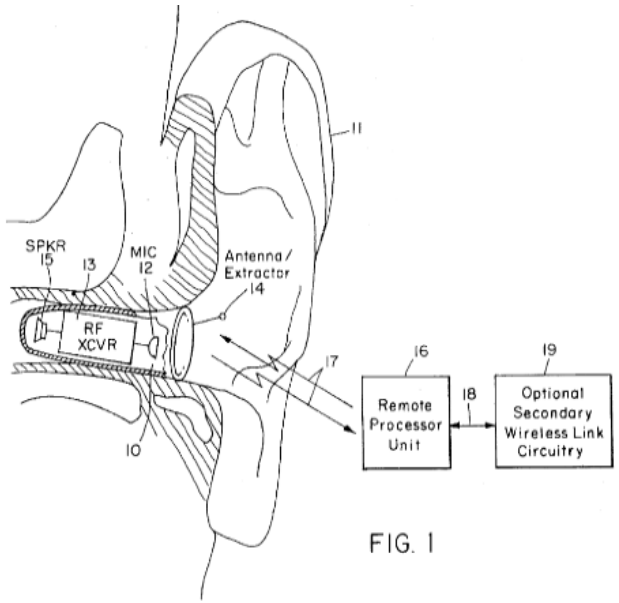 <br><br>FIG. 1<br>Anderson '783 at 3:52–4:14<br>One preferred embodiment of the invention herein described is shown in block diagram form in FIG. 1. In this figure, the earpiece 10 shown worn in the ear 11 uses a standard completely-in-the-canal (CIC) housing, well known in the art, although many other earpiece housing types known in the art (e.g., behind-the-ear, or BTE) can be used. The earpiece shown in FIG. 1 comprises a microphone 12, RF transceiver 13 with an antenna that doubles as an earpiece extractor 14, and speaker 15. Although the dual-use antenna/extractor arrangement shown in FIG. 1 is often desirable, a separate antenna or antennae can be used in conjunction with many different types of earpiece extractors as appropriate for a particular application. Antennae and extractors can be disguised as ear hair or jewelry (e.g., earrings), or conductive filaments can be permanently implanted in the ear cartilage to act as antennae using a process similar to ear piercing. The earpiece 10 communicates with a remote processor unit (RPU) 16 via a primary two-way RF link 17, although many other wireless link media (e.g., ultrasonic or infrared) may be used instead. The RPU is typically worn under clothing (e.g., carried in a pocket or purse), but may also be worn in plain sight (e.g., on a belt) if desired. The RPU 16 may be connected (via wired or wireless means 18) to optional secondary wireless link circuitry |

| Claims | Prior Art |
|---|---|
| | 19 that allows wireless communication between the RPU and other sources of information (e.g., the general subscriber telephone network) via a secondary wireless link. Note that the optional secondary wireless link circuitry 19 may or may not be contained within the RPU case 70 of FIG. 7.<br><br>Anderson ’783 at 5:3–21<br>During normal operation, speech signals from a nearby talker (and other signals in the ambient audio environment) are picked up by the earpiece wireless microphone 20 and transmitted to the RPU FM receiver 24. The RPU FM receiver 24 output level may be adjusted using the RPU FM receiver 24 volume control. The resulting electrical waveform representing signals from the nearby talker travels through the DPDT switch 25, which is set to the lower position as shown in FIG. 2, to the signal enhancer 26. The signal enhancer 26 may be, for example, a voice changer device that varies the pitch of a received speech signal according to the setting of pushbutton controls located on the RPU signal enhancer 26. The speech signal's pitch can then be raised or lowered as desired to help compensate for a user's hearing loss relative to a particular talker's voice characteristics. The modified speech signal travels from the RPU signal enhancer 26 to the RPU FM transmitter 27, and finally to the earpiece headset 21 receiver where the signal is converted to acoustic waves heard by the user.<br><br>Anderson ’783 at 6:8–25<br>The user's voice (and other signals in the ambient audio environment) is picked up by the earpiece wireless microphone 20, transmitted to the RPU 23 FM receiver 24, sent through the DPDT switch 25 to the microphone input of the handset 28 (the handset's microphone transducer may be removed) and transmitted on the secondary wireless link 29 to, e.g., the general subscriber telephone network. Signals from the secondary wireless link 29 are received by the handset 28, sent from the speaker output of the handset 28 (the handset's speaker may be removed) via the DPDT switch 25 to the signal enhancer 26, FM transmitter 27 and finally to the earpiece headset 21 receiver where the signals are converted to acoustic waves heard by the user. Note that the RPU 23 may also include straight-forward connections to a "personal digital assistant" computer, or voice-operated devices connected to the FM receiver 24 output and not shown in FIG. 2.<br><br>Anderson ’783 at 22:11–61<br>Stand-alone earpiece operation: If an earpiece cannot communicate with an RPU for any reason, stand-alone earpiece operation as a CIC hearing aid is generally desirable. Examples include occasions where the RPU must be turned off by pushing the RPU power-off key 78 (e.g., situations where operation of wireless transmitters is prohibited such as aircraft takeoffs and classified military briefings), RPU battery or other RPU electronics failure, misplacement of an RPU, and primary wireless link 17 interference. Note that a |

| Claims | Prior Art |
|---|---|
| | microphone located in the earpiece 10 is preferred to a body-worn microphone, since only an earpiece microphone 12 can be used to provide the desired default CIC hearing aid function (earpiece microphones also provide superior audio localization capabilities as the microphone moves with the user's head, and provide reduced wind and clothing noise compared with body-worn microphones). Parameters that control the stand-alone earpiece operation are stored in the earpiece CIC default parameter storage 870, which is accessed by the ASIC 845 to implement the desired stand-alone functions as described earlier. CIC default parameters include, but are not limited to, settings for the nominal and maximum allowable earpiece volume. Other information contained in the default parameter storage 870 includes, but is not limited to, the communication address and L/R (left/right) selection bit. To ensure that the CIC default parameter storage information cannot be changed inadvertently, changes are only allowed when the earpiece is not in use as, for example, when the earpiece battery 860 is being charged. A battery charging detector 840, that is sensitive to the high-level magnetic induction fields commonly used for earpiece battery charging, indicates to the ASIC 845 that the default parameter storage 870 values may be changed upon receipt of an appropriate command from the RPU. Specifically, to change information in the earpiece CIC default parameter storage 870, a user first activates the earpiece battery charging system, e.g., by placing the earpiece in a recharger/storage tray well known in the art. The RPU keyboard 946 is then used to enter a command to the DSP 948 that indicates the user's desire to change information in the default parameter storage 870, followed by the new information to be stored. The DSP 948 causes the RPU to transmit an interrogation with a reserved address code to which all earpieces being charged within the communication range of the RPU are receptive. The information that is to ultimately be loaded into the earpiece default parameter storage 870 is then transmitted by the RPU using the auxiliary bit field of many successive interrogations, said interrogations are received by the earpiece, and the desired information is loaded into the CIC default parameter storage 870 under control of the ASIC 845.<br><br>Anderson ’783 at 22:61–23:35<br>Details of normal system operation: During normal operation of the hearing aid with wireless remote processor, sounds from the ambient environment are picked up by a microphone 12 in the earpiece 10 and transmitted with other information (e.g., data representing the earpiece battery 860 voltage as obtained by an A/D 865 converter and transmitted under control of the earpiece ASIC 845 in the auxiliary bit of many successive replies via the reply data register 825) over a primary two-way wireless link 17 to the RPU 16, where the audio signals are enhanced according to the user's needs by the RPU DSP 948. Signal enhancement is achieved via any of a number of techniques well known in the art that use the capabilities of the general-purpose RPU DSP 948. The enhanced audio signals may be combined with other information (e.g., a synthesized voice, generated within the DSP 948, warning that the aforementioned earpiece battery voltage is low) and transmitted from the RPU 16 over the primary wireless link 17 to the earpiece 10, where |

| Claims | Prior Art |
|---|---|
| | they are converted by a speaker 15 to sounds that can only be heard by the user 11. Art auxiliary speaker can be supplied in the RPU 16 as a peripheral 950 device that allows people other than the user to hear the same sounds as those produced by the earpiece speaker 15, if desired (as, e.g., when a person other than the user wishes to use the system's optional cellular telephone capabilities). A different, optional secondary two-way wireless link (shown as part of the RPU in FIG. 9 as secondary wireless link circuitry 944, or connected to the RPU by a wired or other, e.g. infrared, wireless link 18 and shown as optional secondary wireless link circuitry 19 in FIG. 1) can be used for communication between the RPU and a cellular telephone system or other sources of information. An RPU keyboard suitable for covert data entry 72, or voice recognition capabilities in the RPU (implemented, e.g., using any of a number of techniques well known in the art that use the general-purpose RPU DSP 948), can be used to control hearing aid parameters (such as amplification level set by the RPU DSP 948) and telephone dialing functions (e.g., automatic dialing of a predefined telephone number using information stored in the RPU DSP 948) in a manner that can be made imperceptible to a casual observer if desired.<br><br>Anderson ’783 at 23:36–42<br>Binaural, directional noise-canceling hearing aid with hearing protection: Two earpieces (one in each ear) and an RPU can be used in a binaural, directional noise-canceling hearing aid system with hearing protection features. Such a system provides some measure of protection for the residual hearing capability of a hearing-impaired user simultaneous with the hearing aid function.<br><br>Anderson ’783 at 25:29–30<br>The verbal commands are received as audio signals by the earpiece 10 and transmitted to the RPU 16.<br><br>Anderson ’783 at 26:54–65<br>Secondary link audio considerations: In some applications, a user may not wish to transmit signals from the ambient audio environment over the secondary wireless link. In such cases, an auxiliary earpiece microphone which favors the "bone conduction" path over the normal "air path" between the user's mouth and ear can be used. To save space, the auxiliary microphone may be housed in the same miniature case as the primary earpiece microphone. Alternatively, when two earpieces are used, unwanted ambient sources can be "nulled out" in the RPU DSP 948 by digital signal processing techniques well known in the art (e.g., the equivalent of speakerphone circuitry). |

| Claims | Prior Art |
|---|---|
| | Anderson ’783 at 26:65–67<br>Note that such binaural signal processing techniques can also provide directivity and background noise cancellation for users<br><br>Anderson ’783 at 27:1–3<br>having total hearing loss in one ear and partial loss in the other ear, as discussed earlier in connection with binaural hearing aid system operation.<br><br>To the extent that Anderson ’783 is found not to disclose this limitation, Nemirovski ’379 discloses this limitation, for example, in the disclosures below.<br><br>Nemirovski ’379 at FIG. 5<br> 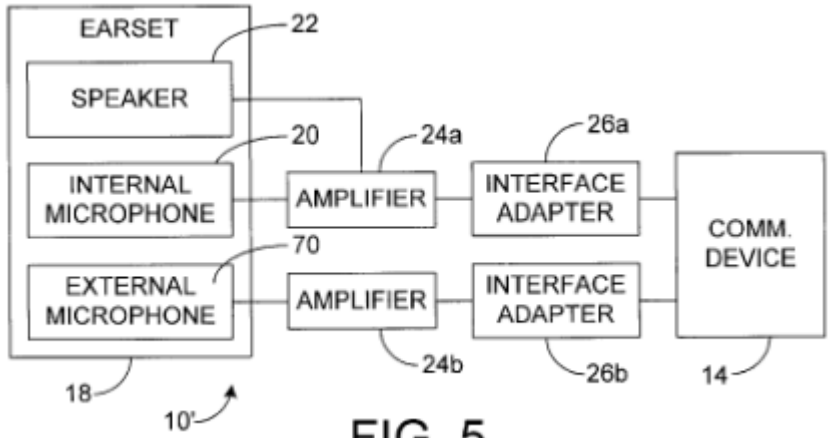 <br><br>FIG. 5<br><br>Nemirovski ’379 at 2:59–60<br>FIG. 5 is a block diagram of an ear microphone assembly according to another aspect of the invention; and<br><br>Nemirovski ’379 at 9:45–60<br>FIG. 5 is a block diagram that illustrates a system 10′ for detecting speech of the user. The system 10′ includes the earset 18 having the internal microphone 20, the speaker 22 and amplifier 24a as described in greater detail above. In addition, the earset 18 of the system 10′ has the external microphone 70. As one skilled in the art will appreciate, the use of the external microphone 70 is optional. The external microphone 70 is disposed on the housing 30 (FIG. 3) and generally points away from the person wearing the earset 18. |

| Claims | Prior Art |
|---|---|
| | As a result, the external microphone 70 detects air pressure changes located outside the ear. These air pressure changes are mainly the result of externally generated noise (other people's speech, environmental noise, etc.) and, in part, to the speech of the person wearing the earset 18, when the speech travels from the mouth of the user and through the air to the external microphone 70.<br><br>That is, Nemirovski discloses that the earset includes an external microphone that "generally points away from the person wearing the earset" and detects air pressure changes outside of the ear that result from "externally generated noise (other people's speech, environmental noise, etc.)." *See id.* at 9:46-58; FIG. 5.<br><br>A POSITA would have been motivated to combine the teachings of Anderson '783 and Nemirovski '379 for the reasons set forth with respect to claim 11.<br><br>To the extent that Anderson '783 and Nemirovski '379 does not disclose any elements of this claim limitation, it would have been obvious to a person having ordinary skill in the art to combine, with the teachings of Anderson '783, those elements, as known to them or as disclosed by other prior art identified in the cover pleading. |
| [51a] A personal audio system as recited in claim 42, wherein the first head-worn structure comprises: a first circuit board internal to the first head-worn structure, the first circuit board supporting at least a first integrated circuit, the first integrated circuit being physically attached to the first circuit board, | Anderson '783 in view of Jannard '526 expressly or inherently discloses "[a] personal audio system as recited in claim 42, wherein the first head-worn structure comprises: a first circuit board internal to the first head-worn structure, the first circuit board supporting at least a first integrated circuit, the first integrated circuit being physically attached to the first circuit board." For example, Anderson discloses that "all earpiece functions (e.g., power control for the 60 MHz oscillator 835) are controlled by a custom application-specific integrated circuit (ASIC) 845." *See id.* at 12:38-41; FIG. 8. To the extent that Anderson alone does not teach that the integrated circuit is supported by and physically attached to a circuit board, this element is met by Anderson in combination with Jannard and Victorian. For example, Jannard discloses an audio device including "a printed circuit board 284 [that] includes one switch for each of the buttons 73c, 73d, and 73e" and "an audio file storage and playback device 286." *See id.* at 13:51-55. The printed circuit board "includes" these elements, such that they are physically attached to the printed circuit board. *See id.* at 13:53-54. The printed circuit board is configured to be received by an "internal cavity" of the eyeglasses. *See id.* at 13:50-51.<br><br>*See* above at claim 31.<br><br>The POSITA would have been motivated to combine the teachings of Anderson '783 and Jannard '526 to meet the claim limitations with a reasonable expectation of success. The POSITA would have been motivated to combine Anderson '783 with Jannard '526 for the reasons described above with respect to claim 26.<br><br>To the extent that Anderson '783, Jannard '526 do not disclose any elements of this claim limitation, it would have been obvious to a person having ordinary skill in the art to combine, with the teachings of Anderson '783 |

| Claims | Prior Art |
|---|---|
| | and Jannard ’526, those elements, as known to them or as disclosed by other prior art identified in the cover pleading. |
| [51b] wherein the first integrated circuit includes at least a processing unit, and | Anderson ’783 expressly or inherently discloses “wherein the first integrated circuit includes at least a processing unit.” The citations provided below discuss Anderson ’783’s example disclosures with respect to this limitation.<br><br>Anderson ’783 at 12:38–46<br>Note that all earpiece functions (e.g., power control for the 60 MHz oscillator 835) are controlled by a custom application-specific integrated circuit (ASIC) 845. The ASIC 845 may be a low-power low-voltage device similar, e.g., to the ECI Semiconductor P576 custom programmable linear/digital gate array. Many of the functions that are shown as separate blocks for clarity in FIG. 8, e.g., reply data register 825, may be implemented within the ASIC 845.<br><br>Anderson ’783 at 21:50–62<br>In the simplest case, the ASIC 845 reads data from the A/D 880, performs a multiplication of the data by a constant (read from the default parameter storage 870) to provide amplification, compares the result with maximum allowable values (read from the default parameter storage 870) and writes the result to the D/A 850. The ASIC 845 may perform other processing (e.g., adaptive volume control) as well. Although none of the remote processor and communication features are available in stand-alone mode, which uses pre-selected hearing aid parameter settings from the default parameter storage 870 in the earpiece, the earpiece provides a useful amplified audio path from the microphone to the speaker.<br><br>The POSITA would have understood an integrated circuit that is configured to perform the described processing operations to include a processing unit.<br><br>To the extent that Anderson ’783, do not disclose any elements of this claim limitation, it would have been obvious to a person having ordinary skill in the art to combine, with the teachings of Anderson ’783, those elements, as known to them or as disclosed by other prior art identified in the cover pleading. |
| [51c] wherein the processing unit is configured to: determine an ambient sound level; and | Anderson ’783 in view of Victorian ’313 expressly or inherently discloses “wherein the processing unit is configured to: determine an ambient sound level.”<br><br>In Anderson, an auxiliary microphone of the RPU measures background noise “for the purpose of automatically setting hearing aid parameters.” *See* Anderson at 7:10-13. A POSITA would have understood this to include the |

| Claims | Prior Art |
|---|---|
| | RPU determining an ambient sound level (a background noise level) and setting the parameters based on that level.<br><br>To the extent that Anderson is found not to teach this limitation, Victorian discloses this limitation. The citations provided below discuss Victorian ’313’s example disclosures with respect to this limitation.<br><br>Victorian ’313 at FIG. 4B<br><br> 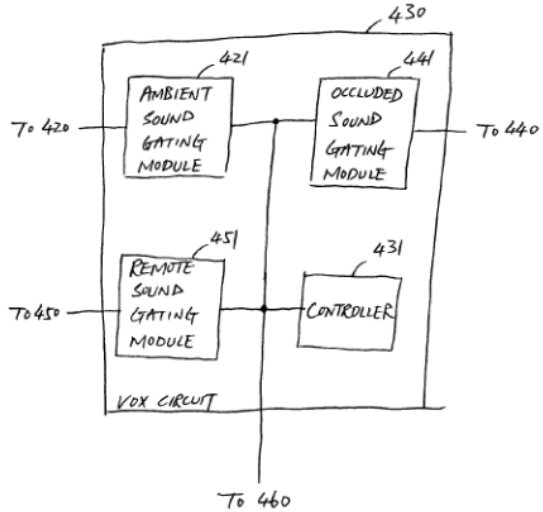 <br><br>FIG. 4B<br><br>Victorian ’313 at [0021]<br>FIG. 4B is a block diagram showing one embodiment of portions of a voice operated exchange (VOX) circuit included in the single ear-level device of FIG. 1.<br><br>Victorian ’313 at [0044]<br>Ear-level device 110 includes an external microphone 420, an ear canal microphone 440, an ear canal speaker 470, a processor 460, a wireless transceiver 450, an antenna 455, a voice operated exchange (VOX) circuit 430, and a battery 480. External microphone 420 picks up ambient sound such that a hearing impaired person wearing ear-level device 110 is not “isolated” when communicating to remote device 190. Thus, ear-level device enables the hearing impaired person to talk to another person either directly (if the other person is nearby) or through a device such as a cell phone. Ear canal microphone 440 detects sound from the ear canal. The sound includes primarily speech of the person wearing ear-level device 110. Ear canal speaker |

| Claims | Prior Art |
| --- | --- |
| | 470 transmits sound received from remote device 190 and/or external microphone 420 to the same ear canal. In one embodiment, ear canal microphone 440 and ear canal speaker 470 are implemented as one physical device. Processor 460 converts the sound picked up from the ear canal to an electrical signal to be transmitted to remote device 190, and converts the signals received from remote device 190 and/or external microphone 420 to a sound audible to the person wearing ear-level device 110. In one embodiment, processor 460 includes one or more of amplification circuitry, filtering circuitry, acoustic feedback reduction circuitry, noise reduction circuitry, and tone control circuitry, among other circuits performing signal processing functions as known in the art. In one embodiment, processor 460 includes a speech recognition module to enhance the audio signal received by and/or transmitted from ear-level device 110. Wireless transceiver 450 and antenna 455 form a telemetry interface supporting telemetry link 195 between ear-level device 110 and remote device 190. Wireless transceiver 450 includes a wireless transmitter and a wireless receiver. The wireless transmitter receives the electrical signal representing the sound picked up from the ear canal from processor 460 and transmits an outgoing wireless signal representing the same sound to remote device 190. The wireless receiver receives an incoming wireless signal representing a remote sound from remote device 190 and transmits an electrical signal representing the remote sound to processor 460. Telemetry link 195 provides for bi-directional communication allowing simultaneous signal transmission, in both directions, between ear-level device 110 and remote device 190. VOX circuit 430 activates a major portion of ear-level device 110 only when sound is detected by at least one of external microphone 420, ear canal microphone 440, and wireless transceiver 450. In one embodiment, VOX circuit 430 includes a voice-controlled switch connecting between battery 480 and the portions of ear-level device 110 that are voice activated. The switch is driven by the sound detected by at least one of external microphone 420, ear canal microphone 440, and wireless transceiver 450. It is turned on when sound detected by external microphone 420 exceeds a predetermined threshold, when sound detected by ear canal microphone 440 exceeds another predetermined threshold, and/or when wireless transceiver 450 receives the incoming wireless signal representing the remote sound. In one embodiment, as discussed with respect to FIG. 4B below, VOX circuit 430 gates or attenuates one or more sounds detected by external microphone 420, ear canal microphone 440, and wireless transceiver 450, to eliminate or reduce echo and ringing caused by the loop formed by ear canal speaker 470 and ear canal microphone 440. Battery 480 supplies the power needed for the operation of ear-level device 110. In one embodiment, battery 480 is a rechargeable battery that can be recharged without being taken out from ear-level device 110.<br><br>Victorian ’313 at [0045]<br>FIG. 4B is a block diagram showing one embodiment of portions of VOX circuit 430. In this embodiment, VOX circuit 430 includes an ambient sound gating module 421 that blanks or attenuates the sound detected by external microphone 420, an occluded sound gating module 441 that blanks or attenuates the sound |

| Claims | Prior Art |
| --- | --- |
| | detected by ear canal microphone 440, a remote sound gating module 451 that blanks or attenuates the sound detected by wireless transceiver 450, and controller 431 to coordinate the states of the gating modules. Because ear canal microphone 440 is capable of detecting the sound delivered to the ear canal from ear canal speaker 470, there is a need to avoid echo and/or ringing. For example, a remote sound from remote device 190 delivered to the ear canal may be detected as an occluded sound and transmitted back to remote device 190, causing echo. The gating modules function in a coordinated manner to eliminate or reduce such echo and/or ringing caused by breaking, or applying resistance into, the audio loop formed by ear canal speaker 470 and ear canal microphone 440.<br><br>Victorian ’313 at [0047]<br>Ambient sound gating module 421 includes a voice-driven switch or attenuator driven by the output of a comparator that compares the amplitude of a detected ambient sound with a predetermined threshold for the ambient sound. When the amplitude of the detected ambient sound exceeds the threshold for the ambient sound, and when controller 431 permits, ambient sound gating module 421 is turned on. When the amplitude of the detected ambient sound drops below the threshold for the ambient sound, ambient sound gating module 421 is turned off. In one embodiment, after the amplitude of the detected ambient sound drops below the threshold for the ambient sound, ambient sound gating module 421 is turned off after a predetermined delay.<br><br>The POSITA would have understood that in order to compare an ambient sound to a threshold, as described, an ambient sound level must necessarily be determined.<br><br>A POSITA would have been motivated to combine the teachings of Anderson ’783, Jannard ’526, and Victorian ’313 to meet the claim limitations with a reasonable expectation of success for the reasons described above with respect to element [51a] and [70].<br><br>To the extent that Anderson ’783 and Victorian ’313 do not disclose any elements of this claim limitation, it would have been obvious to a person having ordinary skill in the art to combine, with the teachings of Anderson ’783, those elements, as known to them or as disclosed by other prior art identified in the cover pleading. |
| [51d] amplify audio output from the first speaker dependent at least in part on the ambient sound level. | Anderson ’783 in view of Victorian ’313 expressly or inherently discloses “amplify audio output from the first speaker dependent at least in part on the ambient sound level.”<br><br>*See* above at claim [51c]. One such hearing aid parameter, set by the RPU based on the ambient sound level, is the amplification level. *See* Anderson at 23:26-35. |

| Claims | Prior Art |
| --- | --- |
| | The citations provided below discuss Victorian ’313’s example disclosures with respect to this limitation.<br><br>Victorian ’313 at [0044]<br>Ear-level device 110 includes an external microphone 420, an ear canal microphone 440, an ear canal speaker 470, a processor 460, a wireless transceiver 450, an antenna 455, a voice operated exchange (VOX) circuit 430, and a battery 480. External microphone 420 picks up ambient sound such that a hearing impaired person wearing ear-level device 110 is not “isolated” when communicating to remote device 190. Thus, ear-level device enables the hearing impaired person to talk to another person either directly (if the other person is nearby) or through a device such as a cell phone. Ear canal microphone 440 detects sound from the ear canal. The sound includes primarily speech of the person wearing ear-level device 110. Ear canal speaker 470 transmits sound received from remote device 190 and/or external microphone 420 to the same ear canal. In one embodiment, ear canal microphone 440 and ear canal speaker 470 are implemented as one physical device. Processor 460 converts the sound picked up from the ear canal to an electrical signal to be transmitted to remote device 190, and converts the signals received from remote device 190 and/or external microphone 420 to a sound audible to the person wearing ear-level device 110. In one embodiment, processor 460 includes one or more of amplification circuitry, filtering circuitry, acoustic feedback reduction circuitry, noise reduction circuitry, and tone control circuitry, among other circuits performing signal processing functions as known in the art. In one embodiment, processor 460 includes a speech recognition module to enhance the audio signal received by and/or transmitted from ear-level device 110. Wireless transceiver 450 and antenna 455 form a telemetry interface supporting telemetry link 195 between ear-level device 110 and remote device 190. Wireless transceiver 450 includes a wireless transmitter and a wireless receiver. The wireless transmitter receives the electrical signal representing the sound picked up from the ear canal from processor 460 and transmits an outgoing wireless signal representing the same sound to remote device 190. The wireless receiver receives an incoming wireless signal representing a remote sound from remote device 190 and transmits an electrical signal representing the remote sound to processor 460. Telemetry link 195 provides for bi-directional communication allowing simultaneous signal transmission, in both directions, between ear-level device 110 and remote device 190. VOX circuit 430 activates a major portion of ear-level device 110 only when sound is detected by at least one of external microphone 420, ear canal microphone 440, and wireless transceiver 450. In one embodiment, VOX circuit 430 includes a voice-controlled switch connecting between battery 480 and the portions of ear-level device 110 that are voice activated. The switch is driven by the sound detected by at least one of external microphone 420, ear canal microphone 440, and wireless transceiver 450. It is turned on when sound detected by external microphone 420 exceeds a predetermined threshold, when sound detected by ear canal microphone 440 exceeds another predetermined threshold, and/or when wireless transceiver 450 receives the incoming wireless signal representing the remote sound. In one embodiment, as discussed with respect to FIG. 4B below, VOX circuit 430 gates or attenuates one or more sounds detected by external microphone 420, ear canal microphone 440, |

| Claims | Prior Art |
| --- | --- |
| | and wireless transceiver 450, to eliminate or reduce echo and ringing caused by the loop formed by ear canal speaker 470 and ear canal microphone 440. Battery 480 supplies the power needed for the operation of ear-level device 110. In one embodiment, battery 480 is a rechargeable battery that can be recharged without being taken out from ear-level device 110.<br><br>Victorian ’313 at [0045]<br>FIG. 4B is a block diagram showing one embodiment of portions of VOX circuit 430. In this embodiment, VOX circuit 430 includes an ambient sound gating module 421 that blanks or attenuates the sound detected by external microphone 420, an occluded sound gating module 441 that blanks or attenuates the sound detected by ear canal microphone 440, a remote sound gating module 451 that blanks or attenuates the sound detected by wireless transceiver 450, and controller 431 to coordinate the states of the gating modules. Because ear canal microphone 440 is capable of detecting the sound delivered to the ear canal from ear canal speaker 470, there is a need to avoid echo and/or ringing. For example, a remote sound from remote device 190 delivered to the ear canal may be detected as an occluded sound and transmitted back to remote device 190, causing echo. The gating modules function in a coordinated manner to eliminate or reduce such echo and/or ringing caused by breaking, or applying resistance into, the audio loop formed by ear canal speaker 470 and ear canal microphone 440.<br><br>Victorian ’313 at [0047]<br>Ambient sound gating module 421 includes a voice-driven switch or attenuator driven by the output of a comparator that compares the amplitude of a detected ambient sound with a predetermined threshold for the ambient sound. When the amplitude of the detected ambient sound exceeds the threshold for the ambient sound, and when controller 431 permits, ambient sound gating module 421 is turned on. When the amplitude of the detected ambient sound drops below the threshold for the ambient sound, ambient sound gating module 421 is turned off. In one embodiment, after the amplitude of the detected ambient sound drops below the threshold for the ambient sound, ambient sound gating module 421 is turned off after a predetermined delay.<br><br>Since the sounds provided to the processor depend on the ambient sound level, and the processor can amplify the received sounds for outputting to a speaker, the POSITA would have understood that audio output from the first speaker is amplified dependent at least in part on the ambient sound level. |

| Claims | Prior Art |
| --- | --- |
| | A POSITA would have been motivated to combine the teachings of Anderson ’783 and Victorian ’313 to meet the claim limitations with a reasonable expectation of success for the reasons described above with respect to element [51a] and [70].<br><br>To the extent that Anderson ’783 and Victorian ’313 do not disclose any elements of this claim limitation, it would have been obvious to a person having ordinary skill in the art to combine, with the teachings of Anderson ’783, those elements, as known to them or as disclosed by other prior art identified in the cover pleading. |
| [52a] A personal audio system as recited in claim 42, wherein the first head-worn structure of the wearable electronic device comprises: a battery internal to the first head-worn structure; and | Anderson ’783 in view of Jannard ’526 expressly or inherently discloses “[a] personal audio system as recited in claim 42, wherein the first head-worn structure of the wearable electronic device comprises: a battery internal to the first head-worn structure,” for example, as explained above for claim 25. Anderson ’783 describes and shows with respect to FIG. 8 that the battery is internal to the earpiece.<br><br>*See* above at claims [25a]; [26a].<br><br>It would have been obvious to a POSITA to combine the teachings of Anderson ’783 and Jannard ’526 for the reasons set forth above with respect to claim 26.<br><br>To the extent that Anderson ’783 in view of Jannard ’526, does not disclose any elements of this claim limitation, it would have been obvious to a person having ordinary skill in the art to combine, with the teachings of Anderson ’783 in view of Jannard ’526, those elements, as known to them or as disclosed by other prior art identified in the cover pleading. |
| [52b] at least one conductive element that facilitates electrical coupling with the battery, the at least one conductive element is at least partially internal to the first head-worn structure but remains at least partially exposed external to the first head-worn structure, and the at least one conductive element comprises at least one conductive pad, | Anderson ’783 in view of Jannard ’526 expressly or inherently discloses “at least one conductive element that facilitates electrical coupling with the battery, the at least one conductive element is at least partially internal to the first head-worn structure but remains at least partially exposed external to the first head-worn structure, and the at least one conductive element comprises at least one conductive pad.” The following citations show examples of where Anderson ’783 discloses the rechargeable battery. |

| Claims | Prior Art |
|---|---|
| | Anderson ’783 at FIG. 8<br> 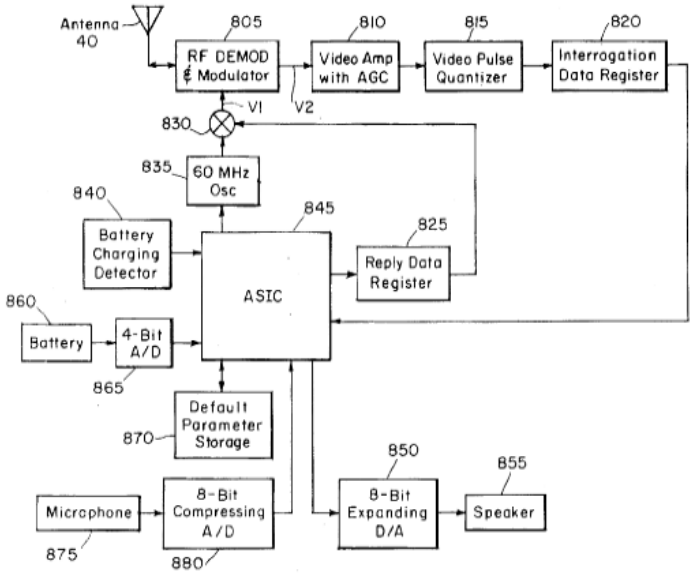 <br><br>FIG. 8<br><br>Anderson ’783 at 3:40–41<br>FIG. 8 is a block diagram showing details of an earpiece for a full-featured preferred embodiment of the invention.<br><br>Anderson ’783 at 6:55–57<br>Earpiece power consumption is preferably minimized to extend battery life, and use of a rechargeable battery is desirable.<br><br>Because Anderson’s battery is internal to the head-worn structure, as described for claim 26[A], a POSITA would understand the conductive element to be at least partially internal to the head-worn structure, so that it can couple to the battery for charging. *See* Anderson at 6:55-57 (“use of a rechargeable battery is desirable”). To the extent that Anderson ’783 is found not to teach the conductive element with the conductive pad, this feature would have been obvious in view of Jannard ’526. The following citations show examples of where Anderson ’783 discloses limitation [52b]. |

| Claims | Prior Art |
| --- | --- |
| | Jannard ’526 at FIG. 11<br> 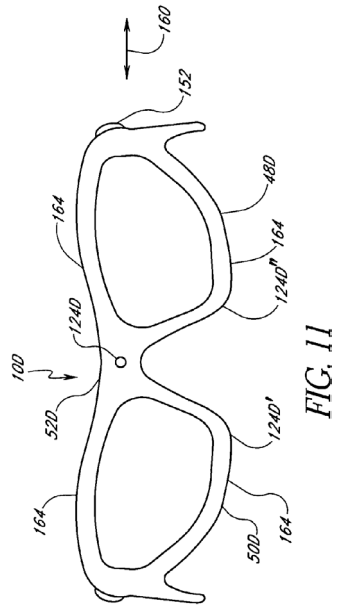 <br><br>Jannard ’526 at 4:27–28<br>FIG. 11 is a front elevational view of the audio device illustrated in FIG. 10.<br><br>Jannard ’526 at 24:56–25:3<br>The audio device 10D can also include power contacts 164 for recharging any rechargeable batteries connected thereto. For example, the power contacts 164 can be disposed on a lower edge of the orbitals 48D, 50D. Thus, with an appropriate recharging cradle (not shown), the audio device 10D can be laid on the cradle, thereby making contact between the power contacts 164 and corresponding contacts in the cradle (not shown). Alternatively, power contacts can be provided in numerous other locations as desired. For example, the power contacts 164 can be disposed at the ends of the ear stems 54D, 56D. A corresponding cradle can include two vertically oriented holes into which the ear stems are inserted for recharging. In this configuration, the lens within the orbitals 48D, 50D would face directly upwardly.<br><br>A POSITA would have understood from these disclosures that the power contacts must be at least partially exposed external to the eyeglasses. Further, in FIG. 11, the power contacts are not entirely visible, which a POSITA would have understood to mean that the power contacts are at least partially internal to the eyeglasses. |

| Claims | Prior Art |
| --- | --- |
| | It would have been obvious to a POSITA to combine the teachings of Anderson ’783 and Jannard ’526 for the reasons set forth above with respect to claim 26.<br><br>To the extent that Anderson ’783 in view of Jannard ’526, does not disclose any elements of this claim limitation, it would have been obvious to a person having ordinary skill in the art to combine, with the teachings of Anderson ’783 in view of Jannard ’526, those elements, as known to them or as disclosed by other prior art identified in the cover pleading. |
| [52c] wherein the battery is able to be electrically coupled via the at least one conductive element to a charging apparatus and charged when at least the first head-worn structure of the head-worn wearable electronic device is placed within the charging apparatus, and | Anderson ’783 in view of Jannard ’526 expressly or inherently discloses “wherein the battery is able to be electrically coupled via the at least one conductive element to a charging apparatus and charged when at least the first head-worn structure of the head-worn wearable electronic device is placed within the charging apparatus,” for example, as explained above for claim 26.<br><br>*See* above at claim [26b].<br><br>It would have been obvious to a POSITA to combine the teachings of Anderson ’783 and Jannard ’526 for the reasons set forth above with respect to claim 26.<br><br>To the extent that Anderson ’783 in view of Jannard ’526, does not disclose any elements of this claim limitation, it would have been obvious to a person having ordinary skill in the art to combine, with the teachings of Anderson ’783 in view of Jannard ’526, those elements, as known to them or as disclosed by other prior art identified in the cover pleading. |
| [52d] wherein the electrical coupling of the at least one conductive element with the charging apparatus is supported by at least a magnetic element. | Anderson ’783 in view of Jannard ’526 expressly or inherently discloses “wherein the battery is able to be electrically coupled via the at least one conductive element to a charging apparatus and charged when at least the first head-worn structure of the head-worn wearable electronic device is placed within the charging apparatus,” for example, as explained above for claim 26.<br><br>*See* above at claim [26c].<br><br>It would have been obvious to a POSITA to combine the teachings of Anderson ’783 and Jannard ’526 for the reasons set forth above with respect to claim 26.<br><br>To the extent that Anderson ’783 in view of Jannard ’526, does not disclose any elements of this claim limitation, it would have been obvious to a person having ordinary skill in the art to combine, with the teachings of Anderson ’783 in view of Jannard ’526, those elements, as known to them or as disclosed by other prior art identified in the cover pleading. |

| Claims | Prior Art |
| --- | --- |
| [53a] A personal audio system as recited in claim 52, wherein the head-worn wearable electronic device comprises: a microphone at least partially internal to the first head-worn structure, | Anderson ’783 expressly or inherently discloses “[a] personal audio system as recited in claim 52, wherein the head-worn wearable electronic device comprises: a microphone at least partially internal to the first head-worn structure,” for example, as explained above for claim 6. As shown in FIG. 1, the microphone is internal to the earpiece.<br><br>*See* above at claim 6. In addition, in Anderson, a wireless microphone 20 is “mounted on” the headset 21 to “form” the earpiece 22, as shown in FIG. 2. The earpiece apparatus is shown in FIG. 2 to include the headset 21; and is head-worn as described for claim 24[A]. The wireless microphone 20 is at least partially internal to this head-worn apparatus, in order to connect to the headset’s battery, and to connect to the A/D converter 880 as shown in FIG. 8 (illustrating the earpiece). *See* Anderson at 3:40-41, 5:52-55, 16:28-32, FIG. 8. Reference to FIG. 8’s disclosures is appropriate in the combination, which implements Anderson’s full-featured application (FIG. 8) in its headset-based device (FIG. 2).<br><br>To the extent that Anderson ’783, does not disclose any elements of this claim limitation, it would have been obvious to a person having ordinary skill in the art to combine, with the teachings of Anderson ’783 in view of Jannard ’526, those elements, as known to them or as disclosed by other prior art identified in the cover pleading. |
| [53b] wherein the head-worn wearable electronic device is configured to receive a voice input via the microphone, determine a requested operation from the voice input using voice recognition, and control an operation by the head-worn wearable electronic device based on the requested operation. | Anderson ’783 in view of Jannard ’526 or Seshadri expressly or inherently discloses “wherein the head-worn wearable electronic device is configured to receive a voice input via the microphone, determine a requested operation from the voice input using voice recognition, and control an operation by the head-worn wearable electronic device based on the requested operation.” The citations provided below discuss Anderson ’783’s example disclosures with respect to this limitation.<br><br>Anderson ’783 at 22:11–61<br>Stand-alone earpiece operation: If an earpiece cannot communicate with an RPU for any reason, stand-alone earpiece operation as a CIC hearing aid is generally desirable. Examples include occasions where the RPU must be turned off by pushing the RPU power-off key 78 (e.g., situations where operation of wireless transmitters is prohibited such as aircraft takeoffs and classified military briefings), RPU battery or other RPU electronics failure, misplacement of an RPU, and primary wireless link 17 interference. Note that a microphone located in the earpiece 10 is preferred to a body-worn microphone, since only an earpiece microphone 12 can be used to provide the desired default CIC hearing aid function (earpiece microphones also provide superior audio localization capabilities as the microphone moves with the user's head, and provide reduced wind and clothing noise compared with body-worn microphones). Parameters that control the stand-alone earpiece operation are stored in the earpiece CIC default parameter storage 870, which is accessed by the ASIC 845 to implement the desired stand-alone functions as described earlier. CIC default parameters include, but are not limited to, settings for the nominal and maximum allowable earpiece volume. |

| Claims | Prior Art |
|---|---|
| | Other information contained in the default parameter storage 870 includes, but is not limited to, the communication address and L/R (left/right) selection bit. To ensure that the CIC default parameter storage information cannot be changed inadvertently, changes are only allowed when the earpiece is not in use as, for example, when the earpiece battery 860 is being charged. A battery charging detector 840, that is sensitive to the high-level magnetic induction fields commonly used for earpiece battery charging, indicates to the ASIC 845 that the default parameter storage 870 values may be changed upon receipt of an appropriate command from the RPU. Specifically, to change information in the earpiece CIC default parameter storage 870, a user first activates the earpiece battery charging system, e.g., by placing the earpiece in a recharger/storage tray well known in the art. The RPU keyboard 946 is then used to enter a command to the DSP 948 that indicates the user's desire to change information in the default parameter storage 870, followed by the new information to be stored. The DSP 948 causes the RPU to transmit an interrogation with a reserved address code to which all earpieces being charged within the communication range of the RPU are receptive. The information that is to ultimately be loaded into the earpiece default parameter storage 870 is then transmitted by the RPU using the auxiliary bit field of many successive interrogations, said interrogations are received by the earpiece, and the desired information is loaded into the CIC default parameter storage 870 under control of the ASIC 845.<br><br>Anderson ’783 at 25:15–27<br>To obtain solicited information, user requests are processed in a variety of means well known in the art, including inputs via one or more pushbuttons on the RPU and voice recognition computer programs implemented in the RPU electronics. Voice recognition can be used almost exclusively, if desired, thereby eliminating nearly all RPU pushbutton controls. Voice commands recognized by the RPU can cause the RPU to initiate actions such as changing hearing aid parameter settings (e.g., volume), or activate appliances and environmental controls (e.g., aids for the physically handicapped) in a distributed wireless network via the secondary wireless link.<br><br>Anderson ’783 at 25:29–30<br>The verbal commands are received as audio signals by the earpiece 10 and transmitted to the RPU 16.<br><br>A POSITA would have understood receiving verbal commands by an earpiece to include receiving the verbal commands by the microphone of the earpiece. It is further disclosed that verbal commands can be transmitted to the RPU, which can recognize voice commands and “initiate actions such as changing hearing aid parameter settings (e.g., volume), or activate appliances and environmental controls (e.g., aids for the physically handicapped) in a distributed wireless network via the secondary wireless link.” *See id.* at 25:22-27. |

| Claims | Prior Art |
| --- | --- |
| | To the extent that Anderson ’783 does not explicitly disclose that the head-worn wearable electronic device determines a requested operation from the voice input and controls operation of the head-worn wearable electronic device, this element would have been obvious to the POSITA. Anderson ’783 discloses that “[i]f an earpiece cannot communicate with an RPU for any reason, stand-alone earpiece operation as a CIC hearing aid” is possible. *See id.* at 22:11-13. Thus, it would have been obvious to a POSITA to modify Anderson ’783’s system to move the functionality for determining requested operations from a voice input and controlling operation of the earpiece accordingly from the RPU to the earpiece.<br><br>Jannard ’526 at 25:53–26:20<br>In another embodiment, a further modification of the audio devices 10, 10A, 10B, 10C, and 10D is provided wherein the audio devices include at least two banks of microphones, with one bank acting as a speaker of received and one bank providing an ambient noise-cancellation function. The microphone banks can be positioned at any suitable location or combination of locations (e.g., on the audio device, within the audio device, opposing sides of the audio device, or the like). In one embodiment, automatic switching of the speaking-microphone and noise-canceling-microphone banks' functions advantageously enhances ease of use. In a further embodiment, the microphone banks can be arranged in an array to be used in conjunction with algorithms to discern, reduce, and/or eliminate noise for the purpose of voice recognition. For example, in one embodiment, such microphone banks can include ASIC-based noise-canceling technology, such as is available in chips from Andrea Electronics Corporation (AEC), to enable voice recognition in ambient noise up to about 130 Db or more. In another embodiment, microphone banks can be arranged in any suitable combination of linear or non-linear arrays to be used in conjunction with algorithms to discern, reduce, and/or eliminate noise in any suitable manner. In another embodiment, audio/proximity sensors can advantageously trigger the appropriate functionality in a specific bank. In another embodiment, a noise-canceling microphone can be provided in connection with a cord or other microphones described above. For example, without limitation, a series of miniature microphones can be supported down a cord from the audio device, separated by desired distances, and aimed in different directions. In another implementation, one or more of the microphones can be for verbal input from the user, and one or more others of the microphones, or the same microphone, can also be for noise-cancellation purposes.<br><br>Jannard ’526 at 30:53–31:2<br>With reference to FIG. 9A, the interface electronics 116 can include audio or “aural” menus that can be selected by user. For example, a user can initiate an audio menu by depressing the button 150 (FIGS. 10–12). Upon initiation of the audio menus, the interface electronics 116 can send an audio signal to the speakers 14, 14A, 14B, 14C, 14D, 14E, 16, 16A, 16B, 16C, 16D, 16E including a humanoid voice. The voice signal can |

| Claims | Prior Art |
| --- | --- |
| | indicate that a first menu option is available. For example, but without limitation, the first menu choice can be to initiate a call. Thus, when the user pushes the button 150 the first time, the user will hear the words "initiate a call," emanating from the speakers 14, 14A, 14B, 14C, 14D, 14E, 16, 16A, 16B, 16C, 16D, 16E. If the user wishes to initiate a call, the user can depress the button 150 again which will send the appropriate AT command to the transceiver 114 so as to transmit the proper AT code to the cellular phone source device S, B (FIG. 8).<br><br>Jannard '526 at 32:4–13<br>For example, if a user chooses a voice command option, the user could issue commands such as, for example, but without limitation, "phonebook" or "call alpha." With a source device such as a cellular phone, that has a speech recognition engine and that is properly trained to recognize the voice of the user, the user can automatically enter the phonebook mode or directly call the phonebook listing "alpha," of course, as is apparent to one of ordinary skill in the art, such a voice command protocol could be used to issue other commands as well.<br><br>Jannard '526 at 32:14–19<br>In another alternative, the interface electronics 116 can include a speech recognition engine and audio menus. In this alternative, the interface electronics 116 can recognize speech from the user, convert the speech to AT commands, and control this source device using a standard AT command protocol.<br><br>Seshadri '839 at [0042]<br>Input module 128, which may be a keypad, touch screen, voice recognition circuit, or other like user interfaces, receives user commands and produces digital command messages 124 there from. Such digital command messages 124 includes, but are not limited to, packet size, synchronization information, frequency hopping initiation information, timeslot allocation information, link establishment information, piconet address information, fast-forward, play, pause, volume adjust, record, stop and rewind.<br><br>Seshadri '839 at [0047]<br>Detachable ear-piece 156 and microphone 154 may have on-chip operations to support call conferencing, call waiting, flash, and other features associated with telephones. These functions may me accessed and reviewed by a user interface 158 and display 160 within host device 152 or a user interface and display located on either detachable ear-piece 156 or microphone 154. The user interface and display, located on either the host device or detachable ear-piece 156 and microphone 154 may have a display and button(s) that |

| Claims | Prior Art |
| --- | --- |
| | may be used to program device, perform directory functions including selecting number to call, view caller ID, initiate call waiting, or initiate call conferencing. Additionally, circuitry within the ear-piece 156 and microphone 154 may enable voice activated dialing. The actual voice recognition could be performed within ear-piece 156, microphone 154, or host device 152. Thus, ear-piece 156 and microphone 154 may act to initiate calls and receive calls.<br><br>To the extent that Anderson ’783 in view of Jannard ’526 or Seshadri ’839, does not disclose any elements of this claim limitation, it would have been obvious to a person having ordinary skill in the art to combine, with the teachings of Anderson ’783, those elements, as known to them or as disclosed by other prior art identified in the cover pleading. |
| [54a] A personal audio system as recited in claim 42, wherein the first head-worn structure comprises: an infrared emitter configured to at least direct infrared signals towards the user when at least the first head-worn structure of the head-worn wearable electronic device is being worn; and | Anderson ’783 in view of Abreu ’960 or Irvin ’332 or Luo ’446 expressly or inherently discloses “[a] personal audio system as recited in claim 42, wherein the first head-worn structure comprises: an infrared emitter configured to at least direct infrared signals towards the user when at least the first head-worn structure of the head-worn wearable electronic device is being worn.” The following citations show examples of where Abreu ’960 discloses this limitation.<br><br>Abreu ’960 at Abstract<br>The support structure includes patches, clips, eyeglasses, head mounted gear and the like, containing passive or active sensors positioned at the end of the tunnel with sensing systems positioned on and accessing a physiologic tunnel.<br><br>Abreu ’960 at 2:62–3:12<br>Included in the present invention are support structures for positioning a sensor on the skin at the end of the tunnel. The present invention discloses devices directed at measuring brain temperature, brain function, metabolic function, hydrodynamic function, hydration status, hemodynamic function, body chemistry and the like. The components include devices and methods for evaluating biological parameters using patches, clips, eyeglasses, head mounted gear and the like with sensing systems adapted to access physiologic tunnels to provide precise and clinically useful information about the physiologic status of the wearer and for enhancing the safety and performance of said wearer, and helping to enhance and preserve the life of said wearer by providing adequate reporting means and alert means relating to the biological parameter being monitored. Other components provide for producing direct or indirect actions, acting on another device, or adjusting another device or article of manufacture based on the biological parameter measured. |

| Claims | Prior Art |
| --- | --- |
| | Abreu ’960 at 44:48–51<br>The support structure includes at least one radiation source from infrared to visible light which interacts with the substance being measured at the BTE tunnel and a detector for collecting the resulting radiation.<br><br>Abreu ’960 at 44:61–67<br>The present invention includes means for directing preferably near-infrared energy into the surface of the skin at the end of the BTE tunnel, means for analyzing and converting the reflectance or back scattered spectrun into the concentration of the substance measured and support means for positioning the light source and detector means adjacent to the surface of the skin at the BTE tunnel site.<br><br>Irvin ’332 at 6:3–33<br>FIG. 4C illustrates the power control circuit 210 coupled with a contact switch functioning as the sensor 220. The contact switch includes a first and second contact connected to the power control circuit 210, and connecting member 222 actuated when the user places the wireless headset 100 on their body. When actuated, the connecting member 222 places the first and second contacts of sensor 220 in electrical connection. Ideally, the sensor 220, when configured as a contact sensor, is placed in the earpiece 130, in the retaining member 140, or in the retaining pad 150 shown in FIG. 1B. Preferably, when sensor 220 is configured as a contact-based proximity sensor, the contacting element of sensor 220 is sealed in a manner that minimizes contaminant ingress. In some embodiments, the contact sensor may be actuated by the user resiliently expanding the retaining member 140 or other element of the wireless headset 100 for mounting upon their body.<br>FIG. 4D illustrates the power control circuit 210 coupled with a proximity sensor 220 not based on mechanical actuation. The proximity sensor 220 may be an active or passive IR sensor, may be a resistive or other type of thermal sensor, or may be an acoustic sensor. As a proximity sensor, sensor 220 provides indication that a user has placed the wireless headset 100 upon their body. As such, any of the foregoing or other presence sensing techniques may be used to implement sensor 220. Preferably, when configured as a proximity sensor, sensor 220 requires minimal power and provides a sensor output signal based on proximity to the user's body. Depending upon the sensing technology chosen, the control circuit 210 may be required to periodically stimulate sensor 220 to generate a detection response.<br><br>Luo ’446 at [0036]<br>The invention generally relies on shining light having a particular wavelength on human skin as well as the reflectance properties of human skin. The surface reflection of the human skin occurs at the surface of the epidermis and is approximately independent of the lighting wavelength and independent of human race. In the infrared (IR) range the wavelengths that can be used are greater than 800 nano-meters and the surface |

| Claims | Prior Art |
| --- | --- |
| | reflectance of human skin is more or less constant and close to 50%. The same hold true for orange and red light in the visible light range, namely wavelengths between approximately 600 and 800 nano-meters can be used, although the surface reflectance for darker skin is reduced for shorter wavelengths. Surface reflectance for dark skin is approximately 25% at 700 nano-meters. In the embodiments shown herein, the energy of choice in the sensor unit 18 is preferably infrared (IR) energy. However, long wavelength visible light energy can also be used as discussed below.<br><br>Luo ’446 at [0038]<br>The optical window 56 is placed at a certain location on the shell 58 of the hearing aid 10. The location of the optical window 56 depends on whether the hearing aid is a BTE, ITE, ITC or CIC hearing aid. In addition, the location is chosen to minimize the distance between the optical window 56 and the skin 64. For optimal reflection of IR signals back through the optical window, the hearing aid user's skin (i.e. the reflecting surface) is required to be immediately over the optical window 56; otherwise the reflected IR energy will not be reflected back towards the reception unit 62. The optical window 56 is typically a small window having a diameter of approximately 1 mm for example. The optical window 56 can be made from IR grade glass or other suitable material that allows for the passage of infrared energy (a different material would be used if visible light is used rather than infrared light). The optical window 56 should be kept clean at all times in order to prevent the emitted infrared energy from being reflected back due to dirt and the like that may accumulate on the optical window 56 over time. The location of the optical window 56 will be discussed in further detail below.<br><br>In view of these disclosures, a POSITA would have understood Abreu ’960’s radiation source to direct infrared radiation toward the user when the user is wearing the support structure.<br><br>A POSITA would have been motivated to combine the teachings of Anderson ’783 and Abreu ’960 or Irvin ’332 or Luo ’446 to meet the claim limitations with a reasonable expectation of success for the reasons described above with respect to claim 23.<br><br>To the extent that Anderson ’783 in view of Abreu ’960 or Irvin ’332 or Luo ’446 does not disclose any elements of this claim limitation, it would have been obvious to a person having ordinary skill in the art to combine, with the teachings of Anderson ’783, those elements, as known to them or as disclosed by other prior art identified in the cover pleading. |
| [54b] an infrared detector configured to detect infrared radiation reflected back from | Anderson ’783 in view of Abreu ’960 or Irvin ’332 or Luo ’446 expressly or inherently discloses “an infrared detector configured to detect infrared radiation reflected back from the user when at least the first head-worn |

| Claims | Prior Art |
| --- | --- |
| the user when at least the first head-worn structure of the head-worn wearable electronic device is being worn. | structure of the head-worn wearable electronic device is being worn." The following citations show examples of where Abreu '960 discloses this limitation.<br><br>Abreu '960 at 44:48–51<br>The support structure includes at least one radiation source from infrared to visible light which interacts with the substance being measured at the BTE tunnel and a detector for collecting the resulting radiation.<br><br>Abreu '960 at 44:61–67<br>The present invention includes means for directing preferably near-infrared energy into the surface of the skin at the end of the BTE tunnel, means for analyzing and converting the reflectance or back scattered spectrun into the concentration of the substance measured and support means for positioning the light source and detector means adjacent to the surface of the skin at the BTE tunnel site.<br><br>Irvin '332 at 6:3–33<br>FIG. 4C illustrates the power control circuit 210 coupled with a contact switch functioning as the sensor 220. The contact switch includes a first and second contact connected to the power control circuit 210, and connecting member 222 actuated when the user places the wireless headset 100 on their body. When actuated, the connecting member 222 places the first and second contacts of sensor 220 in electrical connection. Ideally, the sensor 220, when configured as a contact sensor, is placed in the earpiece 130, in the retaining member 140, or in the retaining pad 150 shown in FIG. 1B. Preferably, when sensor 220 is configured as a contact-based proximity sensor, the contacting element of sensor 220 is sealed in a manner that minimizes contaminant ingress. In some embodiments, the contact sensor may be actuated by the user resiliently expanding the retaining member 140 or other element of the wireless headset 100 for mounting upon their body.<br>FIG. 4D illustrates the power control circuit 210 coupled with a proximity sensor 220 not based on mechanical actuation. The proximity sensor 220 may be an active or passive IR sensor, may be a resistive or other type of thermal sensor, or may be an acoustic sensor. As a proximity sensor, sensor 220 provides indication that a user has placed the wireless headset 100 upon their body. As such, any of the foregoing or other presence sensing techniques may be used to implement sensor 220. Preferably, when configured as a proximity sensor, sensor 220 requires minimal power and provides a sensor output signal based on proximity to the user's body. Depending upon the sensing technology chosen, the control circuit 210 may be required to periodically stimulate sensor 220 to generate a detection response.<br><br>Luo '446 at [0036]<br>The invention generally relies on shining light having a particular wavelength on human skin as well as the |

| Claims | Prior Art |
|---|---|
| | reflectance properties of human skin. The surface reflection of the human skin occurs at the surface of the epidermis and is approximately independent of the lighting wavelength and independent of human race. In the infrared (IR) range the wavelengths that can be used are greater than 800 nano-meters and the surface reflectance of human skin is more or less constant and close to 50%. The same hold true for orange and red light in the visible light range, namely wavelengths between approximately 600 and 800 nano-meters can be used, although the surface reflectance for darker skin is reduced for shorter wavelengths. Surface reflectance for dark skin is approximately 25% at 700 nano-meters. In the embodiments shown herein, the energy of choice in the sensor unit 18 is preferably infrared (IR) energy. However, long wavelength visible light energy can also be used as discussed below.<br><br>Luo ’446 at [0038]<br>The optical window 56 is placed at a certain location on the shell 58 of the hearing aid 10. The location of the optical window 56 depends on whether the hearing aid is a BTE, ITE, ITC or CIC hearing aid. In addition, the location is chosen to minimize the distance between the optical window 56 and the skin 64. For optimal reflection of IR signals back through the optical window, the hearing aid user's skin (i.e. the reflecting surface) is required to be immediately over the optical window 56; otherwise the reflected IR energy will not be reflected back towards the reception unit 62. The optical window 56 is typically a small window having a diameter of approximately 1 mm for example. The optical window 56 can be made from IR grade glass or other suitable material that allows for the passage of infrared energy (a different material would be used if visible light is used rather than infrared light). The optical window 56 should be kept clean at all times in order to prevent the emitted infrared energy from being reflected back due to dirt and the like that may accumulate on the optical window 56 over time. The location of the optical window 56 will be discussed in further detail below.<br><br>Abreu ’960 discloses that the support structure includes “a detector for collecting the resulting radiation” emitted by the infrared radiation source. *See id.* at 44:50-51. The detector “analyz[es] and convert[s] the reflectance or back scattered spectrum into the concentration of the substance measured.” *See id.* at 44:63-65.<br><br>A POSITA would have been motivated to combine the teachings of Anderson ’783 and Abreu ’960 or Irvin ’332 or Luo ’446 to meet the claim limitations with a reasonable expectation of success for the reasons described above with respect to claim 23.<br><br>To the extent that Anderson ’783 in view of Abreu ’960 or Irvin ’332 or Luo ’446 does not disclose any elements of this claim limitation, it would have been obvious to a person having ordinary skill in the art to |

| Claims | Prior Art |
| --- | --- |
| | combine, with the teachings of Anderson ’783, those elements, as known to them or as disclosed by other prior art identified in the cover pleading. |
| 55. A personal audio system as recited in claim 54, wherein electronic circuitry within the first head-worn structure is configured to facilitate determining whether the first head-worn structure is being worn by the user based on at least the detected infrared radiation. | Anderson ’783 in view of Abreu ’960 or Irvin ’332 or Luo ’446 expressly or inherently discloses “[a] personal audio system as recited in claim 54, wherein electronic circuitry within the first head-worn structure is configured to facilitate determining whether the first head-worn structure is being worn by the user based on at least the detected infrared radiation.”<br><br>*See* above at claims [23b] and [54a].<br><br>The following citations show examples of where Abreu ’960 discloses this limitation.<br><br>Abreu ’960 at 15:57–60<br>The eyeglasses can be incorporated with a detecting system to send a signal if the eyeglasses were removed or if the temperature sensor is not capturing signals in a proper manner.<br><br>Abreu ’960 at 15:60–65<br>By way of illustration, but not of limitation, pressuse sensing means can be incorporated in the end of the temples to detect if the sunglasses are being worn, and an abrupt drop in the pressure signal indicates glasses were removed or misplacement of the sensor can also generate an identifiable signal.<br><br>Abreu ’960 at 18:56–59<br>The present invention preferably includes all functions in a miniature semiconductor chip, which as an integrated circuit, incorporates sensor, processing and transmitting units and control circuits.<br><br>Abreu ’960 at 44:61–67<br>The present invention includes means for directing preferably near-infrared energy into the surface of the skin at the end of the BTE tunnel, means for analyzing and converting the reflectance or back scattered spectrun into the concentration of the substance measured and support means for positioning the light source and detector means adjacent to the surface of the skin at the BTE tunnel site.<br><br>Irvin ’332 at 2:20–34<br>The wireless headset serves as a communication accessory to a base unit, such as a cellular telephone. When not in use, the wireless headset reverts to an inactive state and draws essentially no power. A power control circuit imparts automatic enabling capability to the wireless headset. Preferably, the power control circuit |

| Claims | Prior Art |
|---|---|
| | employs a sensor responsive to a natural stimulus associated with a person preparing to use the wireless headset. The wireless headset may sense motion, physical orientation, or user proximity. Sensing techniques include but are not limited to micro-electro-mechanical-systems (MEMS), mercury switches, attitude switches, and IR or acoustic proximity sensors. In some embodiments, the wireless headset transitions from the inactive state to an active state in response to a user picking it up or mounting the wireless headset upon their head.<br><br>Irvin ’332 at 6:3–33<br>FIG. 4C illustrates the power control circuit 210 coupled with a contact switch functioning as the sensor 220. The contact switch includes a first and second contact connected to the power control circuit 210, and connecting member 222 actuated when the user places the wireless headset 100 on their body. When actuated, the connecting member 222 places the first and second contacts of sensor 220 in electrical connection. Ideally, the sensor 220, when configured as a contact sensor, is placed in the earpiece 130, in the retaining member 140, or in the retaining pad 150 shown in FIG. 1B. Preferably, when sensor 220 is configured as a contact-based proximity sensor, the contacting element of sensor 220 is sealed in a manner that minimizes contaminant ingress. In some embodiments, the contact sensor may be actuated by the user resiliently expanding the retaining member 140 or other element of the wireless headset 100 for mounting upon their body.<br>FIG. 4D illustrates the power control circuit 210 coupled with a proximity sensor 220 not based on mechanical actuation. The proximity sensor 220 may be an active or passive IR sensor, may be a resistive or other type of thermal sensor, or may be an acoustic sensor. As a proximity sensor, sensor 220 provides indication that a user has placed the wireless headset 100 upon their body. As such, any of the foregoing or other presence sensing techniques may be used to implement sensor 220. Preferably, when configured as a proximity sensor, sensor 220 requires minimal power and provides a sensor output signal based on proximity to the user's body. Depending upon the sensing technology chosen, the control circuit 210 may be required to periodically stimulate sensor 220 to generate a detection response.<br><br>Irvin ’332 at 8:11–22<br>FIGS. 6 and 7 illustrate operation of the wireless headset 100. FIG. 6 is a state diagram for one exemplary embodiment of the present invention. When the wireless headset 100 is not in use, it automatically enters an inactive state (610). As explained, this inactive state may constitute disconnecting the communications circuit 230 from the power source 240, or may simply represent placing the communications circuit 230 in a non-functional, low-power condition. Absent user stimulus, such as motion of the wireless headset 100 or placement of the wireless headset 100 upon the user's body, the wireless headset 100 remains in the inactive |

| Claims | Prior Art |
| --- | --- |
| | state (610).<br><br>Luo ’446 at [0034]<br>In general, the location sensor module 18 and the hearing aid module 24 communicate via a bi-directional information signal 42. The hearing aid module 24 polls the location sensor module 18 via the bi-directional signal 42, on preferably a periodic basis, to determine whether the hearing aid 10 is in the ear of the hearing aid user. In this case, the bi-directional signal 42 acts as a polling signal. In response to polling done via the bi-directional information signal 42, the location sensor module 18 probes the outer environment of the hearing aid 10 and returns location information via the bi-directional location signal 42. In this case, the bi-directional signal 42 acts as a location information signal. If the location information indicates that the hearing aid 10 is in the ear of the hearing aid user (i.e. the in-the-ear case), the hearing aid 10 operates in full-function mode. If the location information indicates that the hearing aid 10 is not in the ear of the hearing aid user (i.e. the out-of-the-ear case), the hearing aid 10 operates in sleep mode. In sleep mode, the hearing aid 10 can essentially be considered to be off.<br><br>Luo ’446 at [0035]<br>There are several general scenarios for the location of the hearing aid. In the first scenario, the hearing aid 10 is not in the ear of the user and the hearing aid 10 and is in sleep mode. In this case, the location sensor module 18 is polled and the location information indicates that the hearing aid 10 is not in the ear of the hearing aid user and the hearing aid 10 continues to operate in sleep mode. In the second scenario, the hearing aid 10 has just been inserted into the ear of the hearing aid user and the hearing aid 10 was previously in sleep mode. In this case, the location sensor module 18 is polled and the location information indicates that the hearing aid 10 is in the ear of the hearing aid user. The hearing aid 10 then moves into full-function mode. In the third scenario, the hearing aid 10 is in full-function mode and is being taken out of the ear of the hearing aid user. The location sensor module 18 is polled and the location information indicates that the hearing aid 10 is no longer in the ear of the hearing aid user. The hearing aid 10 then moves into sleep mode.<br><br>Luo ’446 at [0036]<br>The invention generally relies on shining light having a particular wavelength on human skin as well as the reflectance properties of human skin. The surface reflection of the human skin occurs at the surface of the epidermis and is approximately independent of the lighting wavelength and independent of human race. In the infrared (IR) range the wavelengths that can be used are greater than 800 nano-meters and the surface reflectance of human skin is more or less constant and close to 50%. The same hold true for orange and red |

| Claims | Prior Art |
| --- | --- |
| | light in the visible light range, namely wavelengths between approximately 600 and 800 nano-meters can be used, although the surface reflectance for darker skin is reduced for shorter wavelengths. Surface reflectance for dark skin is approximately 25% at 700 nano-meters. In the embodiments shown herein, the energy of choice in the sensor unit 18 is preferably infrared (IR) energy. However, long wavelength visible light energy can also be used as discussed below.<br><br>Luo ’446 at [0038]<br>The optical window 56 is placed at a certain location on the shell 58 of the hearing aid 10. The location of the optical window 56 depends on whether the hearing aid is a BTE, ITE, ITC or CIC hearing aid. In addition, the location is chosen to minimize the distance between the optical window 56 and the skin 64. For optimal reflection of IR signals back through the optical window, the hearing aid user's skin (i.e. the reflecting surface) is required to be immediately over the optical window 56; otherwise the reflected IR energy will not be reflected back towards the reception unit 62. The optical window 56 is typically a small window having a diameter of approximately 1 mm for example. The optical window 56 can be made from IR grade glass or other suitable material that allows for the passage of infrared energy (a different material would be used if visible light is used rather than infrared light). The optical window 56 should be kept clean at all times in order to prevent the emitted infrared energy from being reflected back due to dirt and the like that may accumulate on the optical window 56 over time. The location of the optical window 56 will be discussed in further detail below.<br><br>A POSITA would have been motivated to combine the teachings of Anderson ’783 and Abreu ’960 or Irvin ’332 or Luo ’446 to meet the claim limitations with a reasonable expectation of success for the reasons described above with respect to claim 23.<br><br>To the extent that Anderson ’783 in view of Abreu ’960 or Irvin ’332 or Luo ’446 does not disclose any elements of this claim limitation, it would have been obvious to a person having ordinary skill in the art to combine, with the teachings of Anderson ’783, those elements, as known to them or as disclosed by other prior art identified in the cover pleading. |
| [56a] A personal audio system as recited in claim 42, wherein the first head-worn structure comprises: a radiation detector configured to capture radiation data; and | Anderson ’783 in view of Abreu ’960 or Irvin ’332 or Luo ’446 expressly or inherently discloses “[a] Anderson ’783 in view of Abreu ’960 expressly or inherently discloses “[a] personal audio system as recited in claim 54, wherein electronic circuitry within the first head-worn structure is configured to facilitate determining whether the first head-worn structure is being worn by the user based on at least the detected infrared radiation.” |

| Claims | Prior Art |
| --- | --- |
| | The following citations show examples of where Abreu ’960 discloses this limitation.” The citations provided for element [23a] show examples of where Abreu ’960 discloses this limitation. *See, e.g., id.* at 44:50–51.<br><br>*See* above at claims [23a]; [24]; [54a].<br><br>A POSITA would have been motivated to combine the teachings of Anderson ’783 and Abreu ’960 to meet the claim limitations with a reasonable expectation of success for the reasons described above with respect to claim 23.<br><br>To the extent that Anderson ’783 in view of Abreu ’960 does not disclose any elements of this claim limitation, it would have been obvious to a person having ordinary skill in the art to combine, with the teachings of Anderson ’783 and Abreu ’960, those elements, as known to them or as disclosed by other prior art identified in the cover pleading. |
| [56b] first electronic circuitry provided within the first head-worn structure and electrically connected to the radiation detector, the first electronic circuitry configured to process at least the radiation data captured by the radiation detector. | Anderson ’783 in view of Abreu ’960 or Irvin ’332 or Luo ’446 expressly or inherently discloses “[a] Anderson ’783 in view of Abreu ’960 expressly or inherently discloses “first electronic circuitry provided within the first head-worn structure and electrically connected to the radiation detector, the first electronic circuitry configured to process at least the radiation data captured by the radiation detector.”<br><br>*See* above at claim [23b]; [24].<br><br>A POSITA would have understood the electronic circuitry to be implemented by Anderson’s head-worn structure (*e.g.*, earpiece ASIC 845), at least because Anderson discloses the ASIC as configured to interface with sensors. *See* Anderson at 24:23-26.<br><br>A POSITA would have been motivated to combine the teachings of Anderson ’783 and Abreu ’960 or Irvin ’332 or Luo ’446 to meet the claim limitations with a reasonable expectation of success for the reasons described above with respect to claim 23.<br><br>To the extent that Anderson ’783 in view of Abreu ’960 or Irvin ’332 or Luo ’446 does not disclose any elements of this claim limitation, it would have been obvious to a person having ordinary skill in the art to combine, with the teachings of Anderson ’783, those elements, as known to them or as disclosed by other prior art identified in the cover pleading. |
| 57. A personal audio system as recited in claim 56, wherein the first electronic circuitry is configured to determine whether the first head-worn structure is being worn by a | Anderson ’783 in view of Abreu ’960 or Irvin ’332 or Luo ’446 expressly or inherently discloses “[a] personal audio system as recited in claim 56, wherein the first electronic circuitry is configured to determine whether the first head-worn structure is being worn by a user based on at least the processed radiation data.”<br><br>*See* above at claims [23c]; [55a]. |

| Claims | Prior Art |
| --- | --- |
| user based on at least the processed radiation data. | A POSITA would have been motivated to combine the teachings of Anderson ’783 and Abreu ’960 or Irvin ’332 or Luo ’446 to meet the claim limitations with a reasonable expectation of success for the reasons described above with respect to claim 23.<br><br>To the extent that Anderson ’783 in view of Abreu ’960 or Irvin ’332 or Luo ’446 does not disclose any elements of this claim limitation, it would have been obvious to a person having ordinary skill in the art to combine, with the teachings of Anderson ’783 and Abreu ’960, those elements, as known to them or as disclosed by other prior art identified in the cover pleading. |
| 58. A personal audio system as recited in claim 57, wherein the radiation detector comprises a photodetector. | Anderson ’783 in view of Abreu ’960 and/or Irvin expressly or inherently discloses “[a] personal audio system as recited in claim 57, wherein the radiation detector comprises a photodetector.” The following citations show examples of where Abreu ’960 discloses this limitation.<br><br>Abreu ’960 at FIG. 35<br><br>FIG. 35<br> 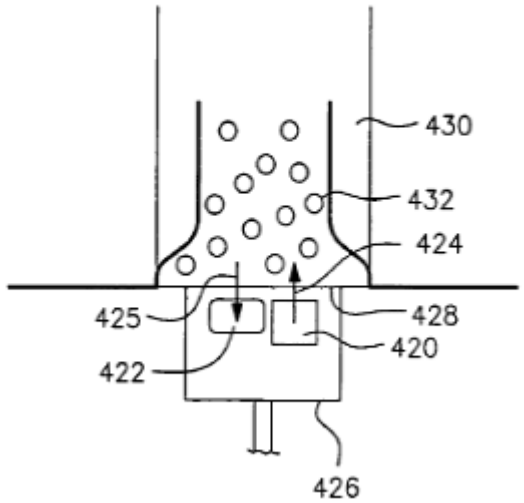 <br><br><br>Abreu ’960 at 45:60–46:13<br>In accordance with FIG. 35 a schematic view of one preferred reflectance measuring apparatus of the present invention is shown. FIG. 35 shows a light source 420 such as an infrared LED and a photodetector 422 located side-by-side and disposed within support structure 426 such as a medial canthal pad or modified nose pads of eyeglasses directing radiation 424 at the BTE tunnel 430 with said light source 420 laying in apposition to the skin 428 at the BTE tunnel 430. The light source 420 delivers the radiation 424 to the skin |

| Claims | Prior Art |
| --- | --- |
| | 428 at the BTE tunnel which is partially absorbed according to the interaction with the substance 432 being measured resulting in attenuated radiation 425. Part of the radiation 424 is then absorbed by the substance 432 and the resulting radiation 425 emitted from BTE tunnel 430 is collected by the photodetector 422 and converted by a processor into the blood concentration of the substance 432. Thin skin 428 is the only tissue interposed between radiation 424, 425 and the substance 432 being measured. The concentration of the substance 432 is accomplished by detecting the magnitude of light attenuation collected which is caused by the absorption signature of the substance being measured.<br><br>A POSITA would have been motivated to combine the teachings of Anderson ’783 and Abreu ’960 to meet the claim limitations with a reasonable expectation of success for the reasons described above with respect to claim 23.<br><br>A POSITA would have understood Irvin’s infrared sensor to comprise a photodetector, because infrared sensors are devices that detect infrared radiation, and photodetectors are devices that detect radiated energy (such as infrared). *See* Irvin at 6:22-24. This understanding is consistent with the ’693 patent, which describes an infrared photodiode capturing reflected infrared radiation as an infrared detector; and describes (via an incorporated reference) that the Sharp PD100MCOMP infrared photodiode is a “suitable” photodetector. *See* ’693 patent at 2:15-19, 93:60-94:3. A POSITA would have been motivated to combine the teachings of Anderson ’783 and Irvin to meet the claim limitations with a reasonable expectation of success for the reasons described above.<br><br>To the extent that Anderson ’783 in view of Abreu ’960 does not disclose any elements of this claim limitation, it would have been obvious to a person having ordinary skill in the art to combine, with the teachings of Anderson ’783 and Abreu ’960, those elements, as known to them or as disclosed by other prior art identified in the cover pleading. |
| 59. A personal audio system as recited in claim 42, wherein the first head-worn structure comprises first electronic circuitry configured to provide audio alerts to the user via the first speaker. | Anderson ’783 expressly or inherently discloses “[a] personal audio system as recited in claim 42, wherein the first head-worn structure comprises first electronic circuitry configured to provide audio alerts to the user via the first speaker,” for example, by providing unsolicited information to the system’s user. The citations provided below discuss Anderson ’783’s example disclosures with respect to this limitation. |

| Claims | Prior Art |
|---|---|
| | Anderson ’783 at FIG. 8<br> 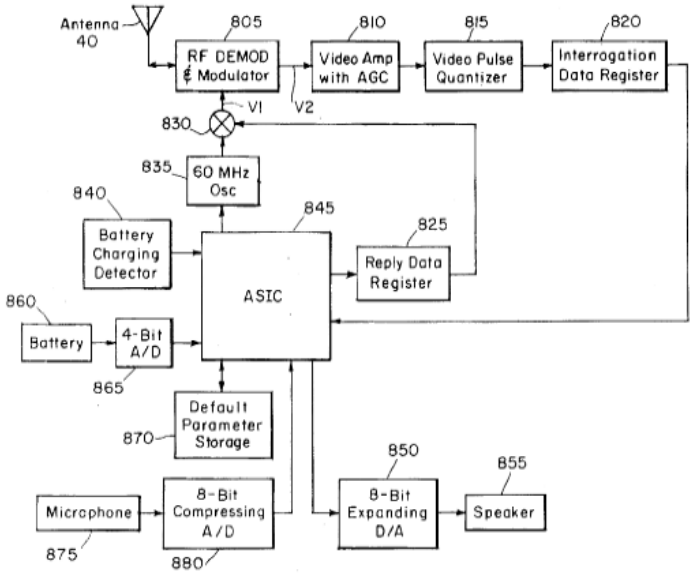 <br><br>FIG. 8<br><br>Anderson ’783 at 3:40–41<br>FIG. 8 is a block diagram showing details of an earpiece for a full-featured preferred embodiment of the invention.<br><br>Anderson ’783 at 24:15<br>Unsolicited information:<br><br>Anderson ’783 at 24:15–26<br>The invention provides useful unsolicited information (i.e., information automatically provided to the user by the system, not as a result of a user request for information) to the user of the system in a manner that can be made imperceptible to a casual observer if desired. Information about the status of the hearing aid system itself, such as a verbal warning that an earpiece or RPU battery voltage is low, is provided to the user as detailed earlier. Automatic measurements of heart pulse rate, body temperature and walking distance traveled can be taken by sensors 950 in the RPU 16 or earpiece 10 and stored in the RPU DSP 948. |

| Claims | Prior Art |
| --- | --- |
| | To the extent that Anderson ’783 does not disclose any elements of this claim limitation, it would have been obvious to a person having ordinary skill in the art to combine, with the teachings of Anderson ’783, those elements, as known to them or as disclosed by other prior art identified in the cover pleading. |
| 60. A personal audio system as recited in claim 59, wherein the audio alerts are dependent on one or more user preference settings. | Anderson ’783 expressly or inherently discloses “[a] personal audio system as recited in claim 59, wherein the audio alerts are dependent on one or more user preference settings,” for example, because the unsolicited information can be provided to the user in a way that is imperceptible to a casual observer if desired. The citations provided below discuss Anderson ’783’s example disclosures with respect to this limitation.<br>Anderson ’783 at 24:15<br>Unsolicited information:<br><br>Anderson ’783 at 24:15–26<br>The invention provides useful unsolicited information (i.e., information automatically provided to the user by the system, not as a result of a user request for information) to the user of the system in a manner that can be made imperceptible to a casual observer if desired. Information about the status of the hearing aid system itself, such as a verbal warning that an earpiece or RPU battery voltage is low, is provided to the user as detailed earlier. Automatic measurements of heart pulse rate, body temperature and walking distance traveled can be taken by sensors 950 in the RPU 16 or earpiece 10 and stored in the RPU DSP 948.<br><br>A POSITA would have understood the ability to adjust the manner in which warnings in accordance with a user’s desires to be a user preference setting.<br>To the extent that Anderson ’783 does not disclose any elements of this claim limitation, it would have been obvious to a person having ordinary skill in the art to combine, with the teachings of Anderson ’783, those elements, as known to them or as disclosed by other prior art identified in the cover pleading. |
| [61a] A personal audio system as recited in claim 42, wherein the first head-worn structure of the head-worn wearable electronic device comprises: a first microphone configured to pick up at least audio input from at least the user, the first microphone being at least | Anderson ’783, alone or in view of Nemirovski ’379, expressly or inherently discloses expressly or inherently discloses “[a] personal audio system as recited in claim 42, wherein the first head-worn structure of the head-worn wearable electronic device comprises: a first microphone configured to pick up at least audio input from at least the user, the first microphone being at least partially in the first head-worn structure.” For example, Anderson ’783 discloses that an earpiece can include a primary earpiece microphone and an auxiliary earpiece microphone contained within the same earpiece housing. *See id.* at 26:59-61. The auxiliary earpiece microphone can pick up audio from the “bone conduction path…between the user’s mouth and ear.” *See id.* at 26:57-59 The |

| Claims | Prior Art |
| --- | --- |
| partially in the first head-worn structure; and | POSITA would have understood that a microphone for picking up sounds from a bone conduction path between a user's mouth and ear would pick up sounds from the user.<br><br>*See* above at claims 6; 10; 11; 24; [50a].<br><br>A POSITA would have been motivated to combine the teachings of Anderson '783 and Nemirovski '379 for the reasons set forth with respect to claim 11.<br><br>To the extent that Anderson '783 and Nemirovski '379 does not disclose any elements of this claim limitation, it would have been obvious to a person having ordinary skill in the art to combine, with the teachings of Anderson '783 and Nemirovski '379, those elements, as known to them or as disclosed by other prior art identified in the cover pleading. |
| [61b] a second microphone configured to pick up at least ambient sound input associated with an environment in the vicinity of the first head-worn structure, | Anderson '783, alone or in view of Nemirovski '379, expressly or inherently discloses expressly or inherently discloses "a second microphone configured to pick up at least ambient sound input associated with an environment in the vicinity of the first head-worn structure." For example, Anderson '783 discloses that the auxiliary earpiece microphone is included in order to avoid transmitting signals from the ambient audio environment over the secondary wireless link. *See id.* at 26:55-57. The POSITA would have understood this to mean that the primary earpiece microphone does pick up sounds from the ambient audio environment in the vicinity of the earpiece.<br><br>*See* above at claims 6; 11; 24; [50b].<br><br>A POSITA would have been motivated to combine the teachings of Anderson '783 and Nemirovski '379 for the reasons set forth with respect to claim 11.<br><br>To the extent that Anderson '783 and Nemirovski '379 does not disclose any elements of this claim limitation, it would have been obvious to a person having ordinary skill in the art to combine, with the teachings of Anderson '783 and Nemirovski '379, those elements, as known to them or as disclosed by other prior art identified in the cover pleading. |
| [61c] wherein the second microphone is positioned to be further away from mouth of the user than the first microphone when at least the first head-worn structure of the head-worn wearable electronic device is being worn. | Anderson '783, alone or in view of Nemirovski '379, expressly or inherently discloses expressly or inherently discloses "wherein the second microphone is positioned to be further away from mouth of the user than the first microphone when at least the first head-worn structure of the head-worn wearable electronic device is being worn." For example, Nemirovski '379 discloses that the earset includes an external and internal microphone, with the external microphone positioned on the housing and pointed away from the wearer of the earset. *See id.* at 9:46-50, FIG. 5. The external microphone "generally points away from the person wearing the earset" and detects air pressure changes outside of the ear that result from "externally generated noise (other people's speech, environmental noise, etc.)." *See id.* at 9:53-58; below disclosures. |

| Claims | Prior Art |
|---|---|
| | Nemirovski ’379 at FIG. 3<br> 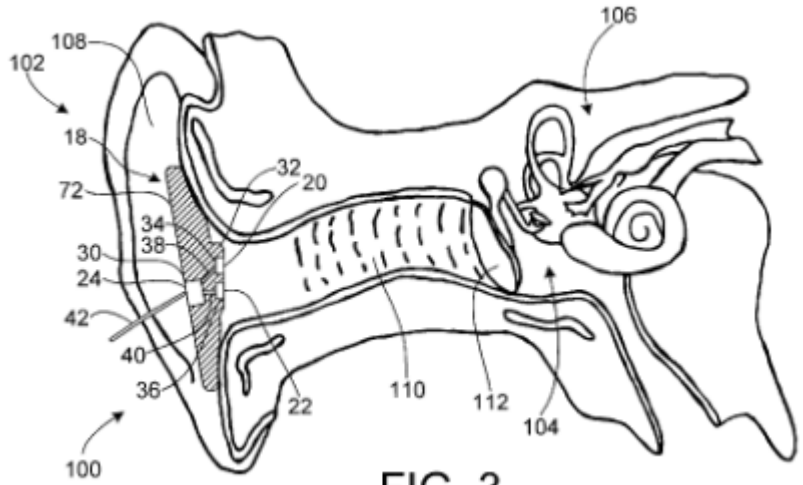 <br><br>FIG. 3<br><br>Nemirovski ’379 at 2:54–56<br>FIG. 3 is a cross-sectional view of an ear microphone assembly, or earset, disposed with respect to the ear of a person, and the ear also shown in cross-section;<br><br>Nemirovski ’379 at 6:36–41<br>The microphone 20 is disposed on an interior portion 32 of the housing 30. Accordingly, the interior portion 32 is sized and shaped to position the microphone 20 with respect to the ear 100 and/or ear canal 110 as desired. In one embodiment, the interior portion 32 positions the microphone 20 and/or the speaker 22 in the concha 122.<br><br>Nemirovski ’379 at 9:19–25<br>With additional reference to FIG. 5, in another embodiment of the present invention, the earset 18 can include an external microphone 70 in addition to the microphone 20 directed toward the ear canal of the user (also referred to herein as an internal microphone 20). The external microphone 70 detects air pressure changes, or sounds, originating outside the user's ear.<br><br>Nemirovski ’379 at 9:33–39<br>The external microphone 70 is disposed on a exterior portion 72 of the housing 30 and is pointed away from |

| Claims | Prior Art |
| --- | --- |
| | the wearer of the earset 18 assembly. The external microphone 70 can be secured to the housing 30 with adhesive and can be disposed in a recess defined by the exterior portion 72. Similar to the internal microphone 20, the external microphone 70 is small (e.g., less than two mm in size).<br><br>Since the internal microphone is within the user's concha and the external microphone is on an exterior portion of the earset housing when the earset is being worn, the POSITA would have understood the external microphone 70 to be positioned to be further away from the mouth of the user than the internal microphone 20.<br><br>A POSITA would have been motivated to combine the teachings of Anderson '783 and Nemirovski '379 for the reasons set forth with respect to claim 11.<br><br>To the extent that Anderson '783 and Nemirovski '379 does not disclose any elements of this claim limitation, it would have been obvious to a person having ordinary skill in the art to combine, with the teachings of Anderson '783 and Nemirovski '379, those elements, as known to them or as disclosed by other prior art identified in the cover pleading. |
| [62] A personal audio system as recited in claim 42, wherein the first head-worn structure comprises: a physical condition sensor configured to acquire data pertaining to a physical condition of the user, the physical condition sensor being provided at least partially internal to the first head-worn structure. | Anderson '783 expressly or inherently discloses "[a] personal audio system as recited in claim 42, wherein the first head-worn structure comprises: a physical condition sensor configured to acquire data pertaining to a physical condition of the user, the physical condition sensor being provided at least partially internal to the first head-worn structure."<br><br>The citations provided below discuss Anderson '783's example disclosures with respect to this limitation.<br><br>Anderson '783 at 2:40–59<br>Another object of this invention is to provide supplemental audio information (e.g. a verbal warning from the RPU that an earpiece battery is low) and communication services (e.g., cellular telephone and paging services) to the user via the hearing aid system. Such services are accessed in a manner that can be made imperceptible to a casual observer if desired. The RPU (which contains a digital signal processor or other computer) acts as one source of information, e.g., by using a synthesized voice message to provide the time of day, and the RPU can also be used to access a secondary wireless link to the general subscriber telephone network or voice paging services. User control of hearing aid parameters and requests for information are accomplished using pushbuttons located on the RPU (including pushbuttons suitable for data entry in a covert manner) or voice recognition. Many sensors and peripheral devices can reside in or be attached to the RPU by wired or wireless means, and can provide a variety of information for different applications (e.g., heart pulse rate) as audio in the user's earpiece. |

| Claims | Prior Art |
| --- | --- |
| | Anderson ’783 at 24:15–26<br>The invention provides useful unsolicited information (i.e., information automatically provided to the user by the system, not as a result of a user request for information) to the user of the system in a manner that can be made imperceptible to a casual observer if desired. Information about the status of the hearing aid system itself, such as a verbal warning that an earpiece or RPU battery voltage is low, is provided to the user as detailed earlier. Automatic measurements of heart pulse rate, body temperature and walking distance traveled can be taken by sensors 950 in the RPU 16 or earpiece 10 and stored in the RPU DSP 948.<br><br>Anderson ’783 at 25:43–50<br>In emergency situations, the system may automatically dial an appropriate emergency service (based on information previously stored by the user in the RPU DSP 948), send voice or digital information regarding location, current medical situation (e.g. heart pulse rate) and medical history data (stored in the RPU DSP 948) in addition to providing normal telephone voice communication via the secondary wireless link circuitry 944.<br><br>The POSITA would have understood a sensor that measures conditions such as heart pulse rate to be a physical condition sensor. The POSITA would also have understood a sensor “in” the earpiece 10 to be at least partially internal to the earpiece or headset.<br><br>To the extent that Anderson ’783 does not disclose any elements of this claim limitation, it would have been obvious to a person having ordinary skill in the art to combine, with the teachings of Anderson ’783, those elements, as known to them or as disclosed by other prior art identified in the cover pleading. |
| 63. A personal audio system as recited in claim 62, wherein the acquired data by the physical condition sensor includes data pertaining to or dependent on heart beats of the user. | Anderson ’783 expressly or inherently discloses “[a] personal audio system as recited in claim 62, wherein the acquired data by the physical condition sensor includes data pertaining to or dependent on heart beats of the user,” for example, by measuring heart pulse rate. The citations provided below discuss Anderson ’783’s example disclosures with respect to this limitation.<br><br>Anderson ’783 at 2:40–59<br>Another object of this invention is to provide supplemental audio information (e.g. a verbal warning from the RPU that an earpiece battery is low) and communication services (e.g., cellular telephone and paging services) to the user via the hearing aid system. Such services are accessed in a manner that can be made imperceptible to a casual observer if desired. The RPU (which contains a digital signal processor or other computer) acts as one source of information, e.g., by using a synthesized voice message to provide the time of day, and the RPU can also be used to access a secondary wireless link to the general subscriber telephone network or voice paging services. User control of hearing aid parameters and requests for information are |

| Claims | Prior Art |
|---|---|
| | accomplished using pushbuttons located on the RPU (including pushbuttons suitable for data entry in a covert manner) or voice recognition. Many sensors and peripheral devices can reside in or be attached to the RPU by wired or wireless means, and can provide a variety of information for different applications (e.g., heart pulse rate) as audio in the user's earpiece.<br><br>Anderson ’783 at 24:15–26<br>The invention provides useful unsolicited information (i.e., information automatically provided to the user by the system, not as a result of a user request for information) to the user of the system in a manner that can be made imperceptible to a casual observer if desired. Information about the status of the hearing aid system itself, such as a verbal warning that an earpiece or RPU battery voltage is low, is provided to the user as detailed earlier. Automatic measurements of heart pulse rate, body temperature and walking distance traveled can be taken by sensors 950 in the RPU 16 or earpiece 10 and stored in the RPU DSP 948.<br><br>To the extent that Anderson ’783 does not disclose any elements of this claim limitation, it would have been obvious to a person having ordinary skill in the art to combine, with the teachings of Anderson ’783, those elements, as known to them or as disclosed by other prior art identified in the cover pleading. |
| 64[pre]. A personal audio system as recited in claim 24, wherein the head-worn wearable electronic device comprises: | Anderson ’783 expressly or inherently discloses “[a] personal audio system as recited in claim 24, wherein the head-worn wearable electronic device comprises” for the same reasons set forth for elements [1pre] and [24pre].<br>*See* above at claim 1[pre]; 24[pre].<br>To the extent that Anderson ’783 does not disclose any elements of this claim limitation, it would have been obvious to a person having ordinary skill in the art to combine, with the teachings of Anderson ’783, those elements, as known to them or as disclosed by other prior art identified in the cover pleading. |
| [64a] a head-worn structure including at least a first microphone, a second microphone, a speaker and a processing unit; | Anderson ’783, alone or in view of Nemirovski ’379, expressly or inherently discloses “a head-worn structure including at least a first microphone, a second microphone, a speaker and a processing unit.” For example, in view of Anderson’s disclosures at 22:11–13, a POSITA would have understood a stand-alone earpiece or headset to include a processing unit for processing the signals picked up by the earpiece microphone(s).<br>The head-worn device includes the RPU (processing unit) as described for claim 51[A]. It additionally includes internal and external microphones as described for claim 50[A] and a speaker as described for claim 24[A].<br>The following disclosures include examples of where Anderson ’783 discloses this limitation. |

| Claims | Prior Art |
| --- | --- |
| | Anderson ’783 at FIG. 1<br> 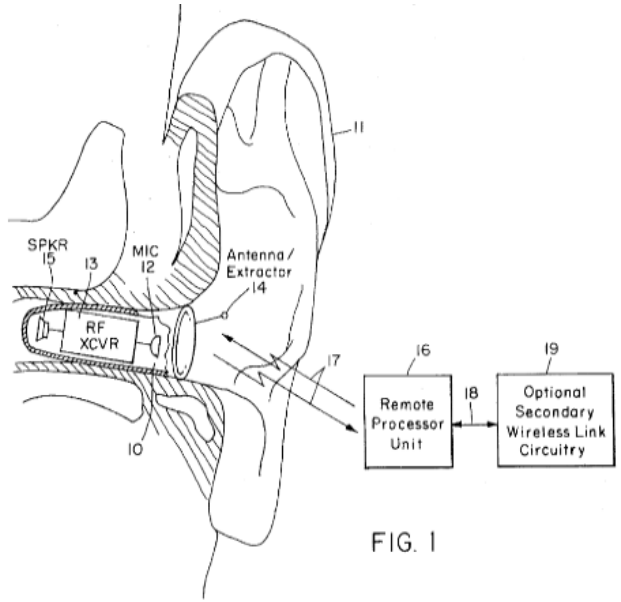 <br><br>FIG. 1<br><br>Anderson ’783 at 3:13–18<br>FIG. 1 is a block diagram system overview illustrating how an earpiece (comprising a microphone, RF transceiver, dual-use antenna/extractor and speaker) is worn in the ear, communicates via a primary two-way RF link with an RPU, and also communicates via an optional secondary wireless link to a telephone system.<br><br>Anderson ’783 at 3:52–4:14<br>One preferred embodiment of the invention herein described is shown in block diagram form in FIG. 1. In this figure, the earpiece 10 shown worn in the ear 11 uses a standard completely-in-the-canal (CIC) housing, well known in the art, although many other earpiece housing types known in the art (e.g., behind-the-ear, or BTE) can be used. The earpiece shown in FIG. 1 comprises a microphone 12, RF transceiver 13 with an antenna that doubles as an earpiece extractor 14, and speaker 15. Although the dual-use antenna/extractor arrangement shown in FIG. 1 is often desirable, a separate antenna or antennae can be used in conjunction with many different types of earpiece extractors as appropriate for a particular application. Antennae and extractors can be disguised as ear hair or jewelry (e.g., earrings), or conductive filaments can be permanently implanted in the ear cartilage to act as antennae using a process similar to ear piercing. The earpiece 10 communicates with a remote processor unit (RPU) 16 via a primary two-way RF link 17, although many |

| Claims | Prior Art |
|---|---|
| | other wireless link media (e.g., ultrasonic or infrared) may be used instead. The RPU is typically worn under clothing (e.g., carried in a pocket or purse), but may also be worn in plain sight (e.g., on a belt) if desired. The RPU 16 may be connected (via wired or wireless means 18) to optional secondary wireless link circuitry 19 that allows wireless communication between the RPU and other sources of information (e.g., the general subscriber telephone network) via a secondary wireless link. Note that the optional secondary wireless link circuitry 19 may or may not be contained within the RPU case 70 of FIG. 7.<br><br>Anderson ’783 at 4:30–33<br>Although the system described here is monaural, it will be clear to those skilled in the art that a binaural (stereo) system can be constructed based on the same principles as the monaural system.<br><br>Anderson ’783 at 5:3–21<br>During normal operation, speech signals from a nearby talker (and other signals in the ambient audio environment) are picked up by the earpiece wireless microphone 20 and transmitted to the RPU FM receiver 24. The RPU FM receiver 24 output level may be adjusted using the RPU FM receiver 24 volume control. The resulting electrical waveform representing signals from the nearby talker travels through the DPDT switch 25, which is set to the lower position as shown in FIG. 2, to the signal enhancer 26. The signal enhancer 26 may be, for example, a voice changer device that varies the pitch of a received speech signal according to the setting of pushbutton controls located on the RPU signal enhancer 26. The speech signal's pitch can then be raised or lowered as desired to help compensate for a user's hearing loss relative to a particular talker's voice characteristics. The modified speech signal travels from the RPU signal enhancer 26 to the RPU FM transmitter 27, and finally to the earpiece headset 21 receiver where the signal is converted to acoustic waves heard by the user.<br><br>Anderson ’783 at 6:8–25<br>The user's voice (and other signals in the ambient audio environment) is picked up by the earpiece wireless microphone 20, transmitted to the RPU 23 FM receiver 24, sent through the DPDT switch 25 to the microphone input of the handset 28 (the handset's microphone transducer may be removed) and transmitted on the secondary wireless link 29 to, e.g., the general subscriber telephone network. Signals from the secondary wireless link 29 are received by the handset 28, sent from the speaker output of the handset 28 (the handset's speaker may be removed) via the DPDT switch 25 to the signal enhancer 26, FM transmitter 27 and finally to the earpiece headset 21 receiver where the signals are converted to acoustic waves heard by the user. Note that the RPU 23 may also include straight-forward connections to a "personal digital assistant" |

| Claims | Prior Art |
|---|---|
| | computer, or voice-operated devices connected to the FM receiver 24 output and not shown in FIG. 2.<br><br>Anderson ’783 at 21:50–62<br>In the simplest case, the ASIC 845 reads data from the A/D 880, performs a multiplication of the data by a constant (read from the default parameter storage 870) to provide amplification, compares the result with maximum allowable values (read from the default parameter storage 870) and writes the result to the D/A 850. The ASIC 845 may perform other processing (e.g., adaptive volume control) as well. Although none of the remote processor and communication features are available in stand-alone mode, which uses pre-selected hearing aid parameter settings from the default parameter storage 870 in the earpiece, the earpiece provides a useful amplified audio path from the microphone to the speaker.<br><br>Anderson ’783 at 22:11–61<br>Stand-alone earpiece operation: If an earpiece cannot communicate with an RPU for any reason, stand-alone earpiece operation as a CIC hearing aid is generally desirable. Examples include occasions where the RPU must be turned off by pushing the RPU power-off key 78 (e.g., situations where operation of wireless transmitters is prohibited such as aircraft takeoffs and classified military briefings), RPU battery or other RPU electronics failure, misplacement of an RPU, and primary wireless link 17 interference. Note that a microphone located in the earpiece 10 is preferred to a body-worn microphone, since only an earpiece microphone 12 can be used to provide the desired default CIC hearing aid function (earpiece microphones also provide superior audio localization capabilities as the microphone moves with the user's head, and provide reduced wind and clothing noise compared with body-worn microphones). Parameters that control the stand-alone earpiece operation are stored in the earpiece CIC default parameter storage 870, which is accessed by the ASIC 845 to implement the desired stand-alone functions as described earlier. CIC default parameters include, but are not limited to, settings for the nominal and maximum allowable earpiece volume. Other information contained in the default parameter storage 870 includes, but is not limited to, the communication address and L/R (left/right) selection bit. To ensure that the CIC default parameter storage information cannot be changed inadvertently, changes are only allowed when the earpiece is not in use as, for example, when the earpiece battery 860 is being charged. A battery charging detector 840, that is sensitive to the high-level magnetic induction fields commonly used for earpiece battery charging, indicates to the ASIC 845 that the default parameter storage 870 values may be changed upon receipt of an appropriate command from the RPU. Specifically, to change information in the earpiece CIC default parameter storage 870, a user first activates the earpiece battery charging system, e.g., by placing the earpiece in a recharger/storage tray well known in the art. The RPU keyboard 946 is then used to enter a command to the DSP 948 that indicates the user's desire to change information in the default parameter storage 870, followed |

| Claims | Prior Art |
|---|---|
| | by the new information to be stored. The DSP 948 causes the RPU to transmit an interrogation with a reserved address code to which all earpieces being charged within the communication range of the RPU are receptive. The information that is to ultimately be loaded into the earpiece default parameter storage 870 is then transmitted by the RPU using the auxiliary bit field of many successive interrogations, said interrogations are received by the earpiece, and the desired information is loaded into the CIC default parameter storage 870 under control of the ASIC 845.<br><br>Anderson ’783 at 22:61–23:35<br>Details of normal system operation: During normal operation of the hearing aid with wireless remote processor, sounds from the ambient environment are picked up by a microphone 12 in the earpiece 10 and transmitted with other information (e.g., data representing the earpiece battery 860 voltage as obtained by an A/D 865 converter and transmitted under control of the earpiece ASIC 845 in the auxiliary bit of many successive replies via the reply data register 825) over a primary two-way wireless link 17 to the RPU 16, where the audio signals are enhanced according to the user's needs by the RPU DSP 948. Signal enhancement is achieved via any of a number of techniques well known in the art that use the capabilities of the general-purpose RPU DSP 948. The enhanced audio signals may be combined with other information (e.g., a synthesized voice, generated within the DSP 948, warning that the aforementioned earpiece battery voltage is low) and transmitted from the RPU 16 over the primary wireless link 17 to the earpiece 10, where they are converted by a speaker 15 to sounds that can only be heard by the user 11. Art auxiliary speaker can be supplied in the RPU 16 as a peripheral 950 device that allows people other than the user to hear the same sounds as those produced by the earpiece speaker 15, if desired (as, e.g., when a person other than the user wishes to use the system's optional cellular telephone capabilities). A different, optional secondary two-way wireless link (shown as part of the RPU in FIG. 9 as secondary wireless link circuitry 944, or connected to the RPU by a wired or other, e.g. infrared, wireless link 18 and shown as optional secondary wireless link circuitry 19 in FIG. 1) can be used for communication between the RPU and a cellular telephone system or other sources of information. An RPU keyboard suitable for covert data entry 72, or voice recognition capabilities in the RPU (implemented, e.g., using any of a number of techniques well known in the art that use the general-purpose RPU DSP 948), can be used to control hearing aid parameters (such as amplification level set by the RPU DSP 948) and telephone dialing functions (e.g., automatic dialing of a predefined telephone number using information stored in the RPU DSP 948) in a manner that can be made imperceptible to a casual observer if desired.<br><br>Anderson ’783 at 23:36–42<br>Binaural, directional noise-canceling hearing aid with hearing protection: Two earpieces (one in each ear) |

| Claims | Prior Art |
| --- | --- |
| | and an RPU can be used in a binaural, directional noise-canceling hearing aid system with hearing protection features. Such a system provides some measure of protection for the residual hearing capability of a hearing-impaired user simultaneous with the hearing aid function.<br><br>Anderson ’783 at 25:29–30<br>The verbal commands are received as audio signals by the earpiece 10 and transmitted to the RPU 16.<br><br>Anderson ’783 at 26:54–65<br>Secondary link audio considerations: In some applications, a user may not wish to transmit signals from the ambient audio environment over the secondary wireless link. In such cases, an auxiliary earpiece microphone which favors the "bone conduction" path over the normal "air path" between the user's mouth and ear can be used. To save space, the auxiliary microphone may be housed in the same miniature case as the primary earpiece microphone. Alternatively, when two earpieces are used, unwanted ambient sources can be "nulled out" in the RPU DSP 948 by digital signal processing techniques well known in the art (e.g., the equivalent of speakerphone circuitry).<br><br>Anderson ’783 at 26:65–67<br>Note that such binaural signal processing techniques can also provide directivity and background noise cancellation for users<br><br>Anderson ’783 at 27:1–3<br>having total hearing loss in one ear and partial loss in the other ear, as discussed earlier in connection with binaural hearing aid system operation.<br><br>*See* above at claims 6 and 11.<br><br>A POSITA would have been motivated to combine the teachings of Anderson ’783 and Nemirovski ’379 for the reasons set forth with respect to claim 11.<br><br>To the extent that Anderson ’783 and Nemirovski ’379 does not disclose any elements of this claim limitation, it would have been obvious to a person having ordinary skill in the art to combine, with the teachings of Anderson ’783, those elements, as known to them or as disclosed by other prior art identified in the cover pleading. |

| Claims | Prior Art |
|---|---|
| [64b] wherein the first microphone is configured to pick up at least audio input from at least the user, | Anderson ’783 in view of Nemirovski ’379 expressly or inherently discloses “wherein the first microphone is configured to pick up at least audio input from at least the user.” For example, Anderson discloses that the auxiliary earpiece microphone can pick up audio from the “bone conduction path…between the user’s mouth and ear.” *See id.* at 26:57-59. The POSITA would have understood that a microphone for picking up sounds from a bone conduction path between a user’s mouth and ear would pick up audio input from the user.<br><br>*See* above at claims 6, 11, 24, [50a], [50b].<br><br>A POSITA would have been motivated to combine the teachings of Anderson ’783 and Nemirovski ’379 for the reasons set forth with respect to claim 11.<br><br>To the extent that Anderson ’783 and Nemirovski ’379 does not disclose any elements of this claim limitation, it would have been obvious to a person having ordinary skill in the art to combine, with the teachings of Anderson ’783, those elements, as known to them or as disclosed by other prior art identified in the cover pleading. |
| [64c] wherein the second microphone is configured to pick up at least environmental audio input associated with an environment in the vicinity of the head-worn wearable electronic device, and | Anderson ’783 in view of Nemirovski ’379 expressly or inherently discloses “wherein the second microphone is configured to pick up at least environmental audio input associated with an environment in the vicinity of the head-worn wearable electronic device.” This element is met for the same reasons discussed above for element [6a].<br><br>*See* above at claims 6, 11, 24, [50a], [50b].<br><br>A POSITA would have been motivated to combine the teachings of Anderson ’783 and Nemirovski ’379 for the reasons set forth with respect to claim 11.<br><br>To the extent that Anderson ’783 and Nemirovski ’379 does not disclose any elements of this claim limitation, it would have been obvious to a person having ordinary skill in the art to combine, with the teachings of Anderson ’783, those elements, as known to them or as disclosed by other prior art identified in the cover pleading. |
| [64d] wherein the processing unit is configured to process the audio input from at least the user via the first microphone to remove at least a portion of the environmental audio input associated with the | Anderson ’783 in view of Nemirovski ’379 expressly or inherently discloses expressly or inherently discloses “wherein the processing unit is configured to process the audio input from at least the user via the first microphone to remove at least a portion of the environmental audio input associated with the environment picked up via the second microphone.” This element is met for the same reasons discussed above for element [11]. For example, Nemirovski ’379 discloses two directional microphones and a processing circuit that can distinguish between user speech and external sounds to cancel noise from the internal microphone. A POSITA would have understood from these disclosures that the processing circuit processes the audio input from the first |

| Claims | Prior Art |
|---|---|
| environment picked up via the second microphone. | (internal) microphone in order to remove audio input that is associated with the environment, which is picked up by the second (external) microphone.<br><br>*See* above at claims 6, 11, and 12.<br><br>A POSITA would have been motivated to combine the teachings of Anderson ’783 and Nemirovski ’379 for the reasons set forth with respect to claim 11. In the combination, a POSITA would understand subtracting the noise component to be performed by Anderson’s RPU, which is the component that performs noise cancellation operations in binaural systems. *See* Anderson at 23:55-24:4.<br><br>To the extent that Anderson ’783 and Nemirovski ’379 does not disclose any elements of this claim limitation, it would have been obvious to a person having ordinary skill in the art to combine, with the teachings of Anderson ’783, those elements, as known to them or as disclosed by other prior art identified in the cover pleading. |
| [65a] A personal audio system as recited in claim 64, wherein the audio input from at least the user picked-up via the first microphone includes at least a voice input, and | Anderson ’783, alone or in view of Nemirovski ’379, expressly or inherently discloses expressly or inherently discloses “[a] personal audio system as recited in claim 64, wherein the audio input from at least the user picked-up via the first microphone includes at least a voice input.” For example, Anderson discloses picking up audio along the bone conduction path, which a POSITA would have understood would pick up the user’s voice:<br><br>Anderson ’783 at 26:54–65<br>Secondary link audio considerations: In some applications, a user may not wish to transmit signals from the ambient audio environment over the secondary wireless link. In such cases, an auxiliary earpiece microphone which favors the "bone conduction" path over the normal "air path" between the user's mouth and ear can be used. To save space, the auxiliary microphone may be housed in the same miniature case as the primary earpiece microphone. Alternatively, when two earpieces are used, unwanted ambient sources can be "nulled out" in the RPU DSP 948 by digital signal processing techniques well known in the art (e.g., the equivalent of speakerphone circuitry).<br><br>Moreover, Nemirovski ’379 discloses that the internal microphone detects ear originated sounds that result from the user’s speech:<br><br>Nemirovski ’379 at 4:27–41<br>The communications system 10 includes an ear microphone assembly, or earset 18, having a microphone 20 and a speaker 22 supported by a housing 30 (FIG. 3). The physical arrangement of the earset 18 will be described in more detail below. The microphone 20 is used to detect sounds emanating or coming from the ear (sometimes referred to as air pressure changes within the ear) of the user that result from speech of the user. The microphone 20 converts those detections into an electrical signal. The electrical signal is optionally |

| Claims | Prior Art |
|---|---|
| | amplified by an amplifier 24. Next, the amplified electrical signal is received by the communication device 14 via an appropriate interface adapter 26. The interface adapter 26 can be, for example, a jack or other electrical connector received by a corresponding receptacle of the communication device 14.<br><br>*See also* above at claim 11; 12 (referencing the sound component A).<br><br>A POSITA would have been motivated to combine the teachings of Anderson ’783 and Nemirovski ’379 for the reasons set forth with respect to claim 11.<br><br>To the extent that Anderson ’783 and Nemirovski ’379 does not disclose any elements of this claim limitation, it would have been obvious to a person having ordinary skill in the art to combine, with the teachings of Anderson ’783 and Nemirovski ’379, those elements, as known to them or as disclosed by other prior art identified in the cover pleading. |
| [65b] wherein the environmental audio input associated with the environment includes at least ambient noise. | Anderson ’783, alone or in view of Nemirovski ’379, expressly or inherently discloses “wherein the environmental audio input associated with the environment includes at least ambient noise.” The citations provided below discuss Anderson ’783’s example disclosures with respect to this limitation.<br><br>Anderson ’783 at 26:54–65<br>Secondary link audio considerations: In some applications, a user may not wish to transmit signals from the ambient audio environment over the secondary wireless link. In such cases, an auxiliary earpiece microphone which favors the "bone conduction" path over the normal "air path" between the user's mouth and ear can be used. To save space, the auxiliary microphone may be housed in the same miniature case as the primary earpiece microphone. Alternatively, when two earpieces are used, unwanted ambient sources can be "nulled out" in the RPU DSP 948 by digital signal processing techniques well known in the art (e.g., the equivalent of speakerphone circuitry).<br><br>A POSITA would have understood signals from the ambient audio environment that are picked up by the primary earpiece microphone to include ambient noise.<br><br>*See also* above at claim 11; 12 (referencing the noise component N).<br><br>A POSITA would have been motivated to combine the teachings of Anderson ’783 and Nemirovski ’379 for the reasons set forth with respect to claim 11.<br><br>To the extent that Anderson ’783 and Nemirovski ’379 does not disclose any elements of this claim limitation, it would have been obvious to a person having ordinary skill in the art to combine, with the teachings of |

| Claims | Prior Art |
| --- | --- |
| | Anderson ’783 and Nemirovski ’379, those elements, as known to them or as disclosed by other prior art identified in the cover pleading. |
| 66. A personal audio system as recited in claim 64, wherein the processing unit is configured to process the audio input from at least the user picked-up via the first microphone to remove at least a portion of the environmental audio input picked-up via the second microphone. | Anderson ’783 in view of Nemirovski ’379 expressly or inherently discloses “[a] personal audio system as recited in claim 64, wherein the processing unit is configured to process the audio input from at least the user picked-up via the first microphone to remove at least a portion of the environmental audio input picked-up via the second microphone,” for example, for the reasons discussed above for claims 11 and 12. A POSITA would have understood the noise cancellation process described in Nemirovski ’379 to teach that at least a portion of the audio picked up by the external microphone (the externally generated noise) is removed from the audio picked up by the internal microphone.<br>*See* above at claims 11; 12.<br>A POSITA would have been motivated to combine the teachings of Anderson ’783 and Nemirovski ’379 for the reasons set forth with respect to claim 11.<br>To the extent that Anderson ’783 and Nemirovski ’379 does not disclose any elements of this claim limitation, it would have been obvious to a person having ordinary skill in the art to combine, with the teachings of Anderson ’783 and Nemirovski ’379, those elements, as known to them or as disclosed by other prior art identified in the cover pleading. |
| [67a] A personal audio system as recited in claim 64, wherein the first microphone is at least partially in the head-worn structure and is positioned so as to be directed towards the user of the head-worn structure, and | Anderson ’783 in view of Nemirovski ’379 expressly or inherently discloses “[a] personal audio system as recited in claim 64, wherein the first microphone is at least partially in the head-worn structure and is positioned so as to be directed towards the user of the head-worn structure,” for the reasons explained above for elements [10a] and [50a].<br>*See* above at claims [10a]; [50a].<br>A POSITA would have been motivated to combine the teachings of Anderson ’783 and Nemirovski ’379 for the reasons set forth with respect to claim 11.<br>To the extent that Anderson ’783 and Nemirovski ’379 does not disclose any elements of this claim limitation, it would have been obvious to a person having ordinary skill in the art to combine, with the teachings of Anderson ’783 and Nemirovski ’379, those elements, as known to them or as disclosed by other prior art identified in the cover pleading. |
| [67b] wherein the second microphone is at least partially in the head-worn structure so | Anderson ’783 in view of Nemirovski ’379 expressly or inherently discloses “wherein the second microphone is at least partially in the head-worn structure so as to be directed away from the user of the head-worn structure,” for the reasons explained above for element [5ba]. |

| Claims | Prior Art |
|---|---|
| as to be directed away from the user of the head-worn structure. | *See* above at claim [50b].<br>The external microphone can be disposed in a recess of the housing 30 and thus at least partially in the head-worn structure. *See* Nemirovski at 9:32-35.<br>A POSITA would have been motivated to combine the teachings of Anderson ’783 and Nemirovski ’379 for the reasons set forth with respect to claim 11.<br>To the extent that Anderson ’783 and Nemirovski ’379 does not disclose any elements of this claim limitation, it would have been obvious to a person having ordinary skill in the art to combine, with the teachings of Anderson ’783 and Nemirovski ’379, those elements, as known to them or as disclosed by other prior art identified in the cover pleading. |
| 68. A personal audio system as recited in claim 67, wherein the processing unit is configured to process the audio input picked-up via at least the first microphone to remove at least a portion of the environmental audio input picked-up via the second microphone. | Anderson ’783 in view of Nemirovski ’379 expressly or inherently discloses “[a] personal audio system as recited in claim 67, wherein the processing unit is configured to process the audio input picked-up via at least the first microphone to remove at least a portion of the environmental audio input picked-up via the second microphone.” For example, as described for element [66a], Nemirovski discloses that a communication device or other processing circuit can produce a “relatively noise-free speech signal” in which externally generated noise (e.g., “environmental noise”) is “cancel[ed] … from the detections of the internal microphone.” *See id.* at 10:12-13, 10:25. The externally generated noise is the primary audio picked up by the external microphone. *See id.* at 9:55-57. Thus, the POSITA would have understood that at least a portion of the environmental audio picked up by the external microphone is removed from the audio picked up by the internal microphone.<br>*See* above at claim 11.<br>A POSITA would have been motivated to combine the teachings of Anderson ’783 and Nemirovski ’379 for the reasons set forth with respect to claim 11.<br>To the extent that Anderson ’783 and Nemirovski ’379 does not disclose any elements of this claim limitation, it would have been obvious to a person having ordinary skill in the art to combine, with the teachings of Anderson ’783 and Nemirovski ’379, those elements, as known to them or as disclosed by other prior art identified in the cover pleading. |
| [69a] A personal audio system as recited in claim 68, wherein the audio input from at least the user includes at least a voice input, and | Anderson ’783 in view of Nemirovski ’379 expressly or inherently discloses “[a] personal audio system as recited in claim 68, wherein the audio input from at least the user includes at least a voice input,” for the reasons set forth for claim 68 and element [65a].<br>*See* above at claim [65a]. |

| Claims | Prior Art |
| --- | --- |
| | A POSITA would have been motivated to combine the teachings of Anderson ’783 and Nemirovski ’379 for the reasons set forth with respect to claim 11.<br><br>To the extent that Anderson ’783 and Nemirovski ’379 does not disclose any elements of this claim limitation, it would have been obvious to a person having ordinary skill in the art to combine, with the teachings of Anderson ’783 and Nemirovski ’379, those elements, as known to them or as disclosed by other prior art identified in the cover pleading. |
| [69b] wherein the environmental audio input includes at least ambient noise. | Anderson ’783 in view of Nemirovski ’379 expressly or inherently discloses “wherein the environmental audio input includes at least ambient noise,” for the reasons set forth for element [65b].<br><br>*See* above at claim [65b].<br><br>A POSITA would have been motivated to combine the teachings of Anderson ’783 and Nemirovski ’379 for the reasons set forth with respect to claim 11.<br><br>To the extent that Anderson ’783 and Nemirovski ’379 does not disclose any elements of this claim limitation, it would have been obvious to a person having ordinary skill in the art to combine, with the teachings of Anderson ’783 and Nemirovski ’379, those elements, as known to them or as disclosed by other prior art identified in the cover pleading. |
| [70a] A personal audio system as recited in claim 24, wherein the head-worn wearable electronic device comprises: a head-worn structure comprising at least two microphones and a processing unit, | Anderson ’783, alone or in view of Nemirovski, expressly or inherently discloses “[a] personal audio system as recited in claim 24, wherein the head-worn wearable electronic device comprises: a head-worn structure comprising at least two microphones and a processing unit.”<br><br>*See* above at claim [64a].<br><br>For example, Anderson discloses two microphones and an ASIC that performs processing functions. |

| Claims | Prior Art |
| --- | --- |
| | Anderson ’783 at FIG. 1<br> 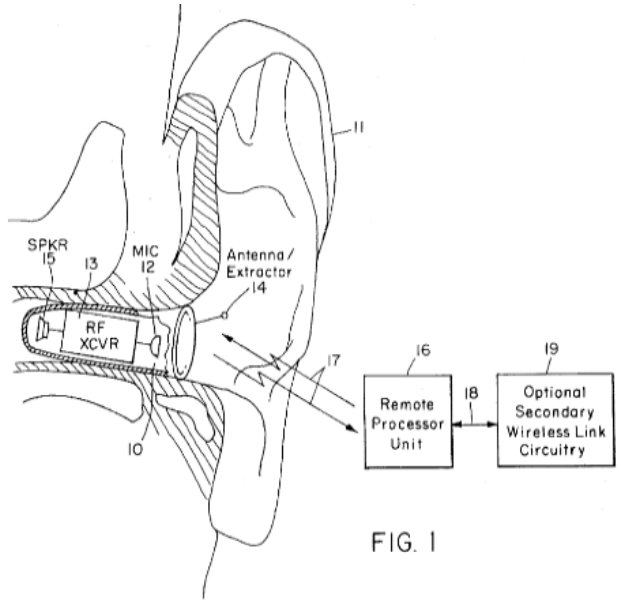 <br><br>FIG. 1<br><br>Anderson ’783 at 3:13–18<br>FIG. 1 is a block diagram system overview illustrating how an earpiece (comprising a microphone, RF transceiver, dual-use antenna/extractor and speaker) is worn in the ear, communicates via a primary two-way RF link with an RPU, and also communicates via an optional secondary wireless link to a telephone system.<br><br>Anderson ’783 at 3:52–4:14<br>One preferred embodiment of the invention herein described is shown in block diagram form in FIG. 1. In this figure, the earpiece 10 shown worn in the ear 11 uses a standard completely-in-the-canal (CIC) housing, well known in the art, although many other earpiece housing types known in the art (e.g., behind-the-ear, or BTE) can be used. The earpiece shown in FIG. 1 comprises a microphone 12, RF transceiver 13 with an antenna that doubles as an earpiece extractor 14, and speaker 15. Although the dual-use antenna/extractor arrangement shown in FIG. 1 is often desirable, a separate antenna or antennae can be used in conjunction with many different types of earpiece extractors as appropriate for a particular application. Antennae and extractors can be disguised as ear hair or jewelry (e.g., earrings), or conductive filaments can be permanently implanted in the ear cartilage to act as antennae using a process similar to ear piercing. The earpiece 10 communicates with a remote processor unit (RPU) 16 via a primary two-way RF link 17, although many |

| Claims | Prior Art |
|---|---|
| | other wireless link media (e.g., ultrasonic or infrared) may be used instead. The RPU is typically worn under clothing (e.g., carried in a pocket or purse), but may also be worn in plain sight (e.g., on a belt) if desired. The RPU 16 may be connected (via wired or wireless means 18) to optional secondary wireless link circuitry 19 that allows wireless communication between the RPU and other sources of information (e.g., the general subscriber telephone network) via a secondary wireless link. Note that the optional secondary wireless link circuitry 19 may or may not be contained within the RPU case 70 of FIG. 7.<br><br>Anderson ’783 at 5:3–21<br>During normal operation, speech signals from a nearby talker (and other signals in the ambient audio environment) are picked up by the earpiece wireless microphone 20 and transmitted to the RPU FM receiver 24. The RPU FM receiver 24 output level may be adjusted using the RPU FM receiver 24 volume control. The resulting electrical waveform representing signals from the nearby talker travels through the DPDT switch 25, which is set to the lower position as shown in FIG. 2, to the signal enhancer 26. The signal enhancer 26 may be, for example, a voice changer device that varies the pitch of a received speech signal according to the setting of pushbutton controls located on the RPU signal enhancer 26. The speech signal's pitch can then be raised or lowered as desired to help compensate for a user's hearing loss relative to a particular talker's voice characteristics. The modified speech signal travels from the RPU signal enhancer 26 to the RPU FM transmitter 27, and finally to the earpiece headset 21 receiver where the signal is converted to acoustic waves heard by the user.<br><br>Anderson ’783 at 6:8–25<br>The user's voice (and other signals in the ambient audio environment) is picked up by the earpiece wireless microphone 20, transmitted to the RPU 23 FM receiver 24, sent through the DPDT switch 25 to the microphone input of the handset 28 (the handset's microphone transducer may be removed) and transmitted on the secondary wireless link 29 to, e.g., the general subscriber telephone network. Signals from the secondary wireless link 29 are received by the handset 28, sent from the speaker output of the handset 28 (the handset's speaker may be removed) via the DPDT switch 25 to the signal enhancer 26, FM transmitter 27 and finally to the earpiece headset 21 receiver where the signals are converted to acoustic waves heard by the user. Note that the RPU 23 may also include straight-forward connections to a "personal digital assistant" computer, or voice-operated devices connected to the FM receiver 24 output and not shown in FIG. 2.<br><br>Anderson ’783 at 21:50–62<br>In the simplest case, the ASIC 845 reads data from the A/D 880, performs a multiplication of the data by a constant (read from the default parameter storage 870) to provide amplification, compares the result with |

| Claims | Prior Art |
| --- | --- |
| | maximum allowable values (read from the default parameter storage 870) and writes the result to the D/A 850. The ASIC 845 may perform other processing (e.g., adaptive volume control) as well. Although none of the remote processor and communication features are available in stand-alone mode, which uses pre-selected hearing aid parameter settings from the default parameter storage 870 in the earpiece, the earpiece provides a useful amplified audio path from the microphone to the speaker.<br><br>Anderson ’783 at 22:11–61<br>Stand-alone earpiece operation: If an earpiece cannot communicate with an RPU for any reason, stand-alone earpiece operation as a CIC hearing aid is generally desirable. Examples include occasions where the RPU must be turned off by pushing the RPU power-off key 78 (e.g., situations where operation of wireless transmitters is prohibited such as aircraft takeoffs and classified military briefings), RPU battery or other RPU electronics failure, misplacement of an RPU, and primary wireless link 17 interference. Note that a microphone located in the earpiece 10 is preferred to a body-worn microphone, since only an earpiece microphone 12 can be used to provide the desired default CIC hearing aid function (earpiece microphones also provide superior audio localization capabilities as the microphone moves with the user's head, and provide reduced wind and clothing noise compared with body-worn microphones). Parameters that control the stand-alone earpiece operation are stored in the earpiece CIC default parameter storage 870, which is accessed by the ASIC 845 to implement the desired stand-alone functions as described earlier. CIC default parameters include, but are not limited to, settings for the nominal and maximum allowable earpiece volume. Other information contained in the default parameter storage 870 includes, but is not limited to, the communication address and L/R (left/right) selection bit. To ensure that the CIC default parameter storage information cannot be changed inadvertently, changes are only allowed when the earpiece is not in use as, for example, when the earpiece battery 860 is being charged. A battery charging detector 840, that is sensitive to the high-level magnetic induction fields commonly used for earpiece battery charging, indicates to the ASIC 845 that the default parameter storage 870 values may be changed upon receipt of an appropriate command from the RPU. Specifically, to change information in the earpiece CIC default parameter storage 870, a user first activates the earpiece battery charging system, e.g., by placing the earpiece in a recharger/storage tray well known in the art. The RPU keyboard 946 is then used to enter a command to the DSP 948 that indicates the user's desire to change information in the default parameter storage 870, followed by the new information to be stored. The DSP 948 causes the RPU to transmit an interrogation with a reserved address code to which all earpieces being charged within the communication range of the RPU are receptive. The information that is to ultimately be loaded into the earpiece default parameter storage 870 is then transmitted by the RPU using the auxiliary bit field of many successive interrogations, said interrogations are received by the earpiece, and the desired information is loaded into the CIC default |

| Claims | Prior Art |
| --- | --- |
| | parameter storage 870 under control of the ASIC 845.<br><br>Anderson ’783 at 22:61–23:35<br>Details of normal system operation: During normal operation of the hearing aid with wireless remote processor, sounds from the ambient environment are picked up by a microphone 12 in the earpiece 10 and transmitted with other information (e.g., data representing the earpiece battery 860 voltage as obtained by an A/D 865 converter and transmitted under control of the earpiece ASIC 845 in the auxiliary bit of many successive replies via the reply data register 825) over a primary two-way wireless link 17 to the RPU 16, where the audio signals are enhanced according to the user's needs by the RPU DSP 948. Signal enhancement is achieved via any of a number of techniques well known in the art that use the capabilities of the general-purpose RPU DSP 948. The enhanced audio signals may be combined with other information (e.g., a synthesized voice, generated within the DSP 948, warning that the aforementioned earpiece battery voltage is low) and transmitted from the RPU 16 over the primary wireless link 17 to the earpiece 10, where they are converted by a speaker 15 to sounds that can only be heard by the user 11. Art auxiliary speaker can be supplied in the RPU 16 as a peripheral 950 device that allows people other than the user to hear the same sounds as those produced by the earpiece speaker 15, if desired (as, e.g., when a person other than the user wishes to use the system's optional cellular telephone capabilities). A different, optional secondary two-way wireless link (shown as part of the RPU in FIG. 9 as secondary wireless link circuitry 944, or connected to the RPU by a wired or other, e.g. infrared, wireless link 18 and shown as optional secondary wireless link circuitry 19 in FIG. 1) can be used for communication between the RPU and a cellular telephone system or other sources of information. An RPU keyboard suitable for covert data entry 72, or voice recognition capabilities in the RPU (implemented, e.g., using any of a number of techniques well known in the art that use the general-purpose RPU DSP 948), can be used to control hearing aid parameters (such as amplification level set by the RPU DSP 948) and telephone dialing functions (e.g., automatic dialing of a predefined telephone number using information stored in the RPU DSP 948) in a manner that can be made imperceptible to a casual observer if desired.<br><br>Anderson ’783 at 23:36–42<br>Binaural, directional noise-canceling hearing aid with hearing protection: Two earpieces (one in each ear) and an RPU can be used in a binaural, directional noise-canceling hearing aid system with hearing protection features. Such a system provides some measure of protection for the residual hearing capability of a hearing-impaired user simultaneous with the hearing aid function. |

| Claims | Prior Art |
| --- | --- |
| | Anderson ’783 at 25:29–30<br>The verbal commands are received as audio signals by the earpiece 10 and transmitted to the RPU 16.<br><br>Anderson ’783 at 26:54–65<br>Secondary link audio considerations: In some applications, a user may not wish to transmit signals from the ambient audio environment over the secondary wireless link. In such cases, an auxiliary earpiece microphone which favors the "bone conduction" path over the normal "air path" between the user's mouth and ear can be used. To save space, the auxiliary microphone may be housed in the same miniature case as the primary earpiece microphone. Alternatively, when two earpieces are used, unwanted ambient sources can be "nulled out" in the RPU DSP 948 by digital signal processing techniques well known in the art (e.g., the equivalent of speakerphone circuitry).<br><br>Anderson ’783 at 26:65–67<br>Note that such binaural signal processing techniques can also provide directivity and background noise cancellation for users<br><br>Anderson ’783 at 27:1–3<br>having total hearing loss in one ear and partial loss in the other ear, as discussed earlier in connection with binaural hearing aid system operation.<br><br>Nemirovski ’379 at FIG. 5 |

| Claims | Prior Art |
|---|---|
| | 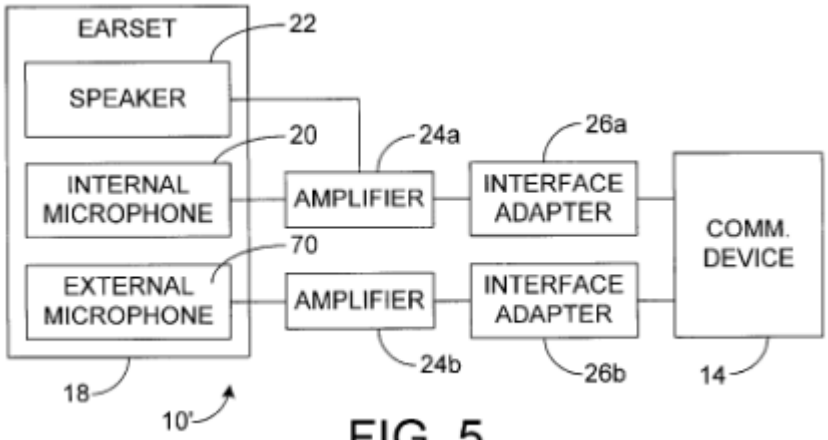 <br>FIG. 5<br><br>Nemirovski ’379 at 3:6–23<br><br>The present invention is directed to a communication system, including a communications device and an ear microphone, or earset, assembly. The communications system allows a user to speak with a remotely located person. The ear microphone assembly, also referred to herein as an earset, includes a microphone and a speaker supported by a housing. The housing is retained by the ear of the user and allows for hands free use of the communication system while carrying on a conversation with the remotely located person. The microphone is directed towards the ear canal of the user and detects sounds emanating or coming out of the ear (or air pressure changes occurring within the ear) to accurately and reliably detect the speech of the user. The position of the microphone may also help to reduce detection of externally generated sounds. The ear microphone assembly allows for separation of a speech input device for a cellular, or wireless, telephone from an RF transceiver of the telephone.<br><br>Nemirovski ’379 at 9:45–60<br><br>FIG. 5 is a block diagram that illustrates a system 10′ for detecting speech of the user. The system 10′ includes the earset 18 having the internal microphone 20, the speaker 22 and amplifier 24a as described in greater detail above. In addition, the earset 18 of the system 10′ has the external microphone 70. As one skilled in the art will appreciate, the use of the external microphone 70 is optional. The external microphone 70 is disposed on the housing 30 (FIG. 3) and generally points away from the person wearing the earset 18. As a result, the external microphone 70 detects air pressure changes located outside the ear. These air pressure changes are mainly the result of externally generated noise (other people's speech, |

| Claims | Prior Art |
| --- | --- |
| | environmental noise, etc.) and, in part, to the speech of the person wearing the earset 18, when the speech travels from the mouth of the user and through the air to the external microphone 70.<br><br>A POSITA would have been motivated to combine the teachings of Anderson and Nemirovski to meet the claim limitations with a reasonable expectation of success for the reasons described above with respect to claim 11.<br><br>To the extent that Anderson ’783 and Nemirovski ’379 does not disclose any elements of this claim limitation, it would have been obvious to a person having ordinary skill in the art to combine, with the teachings of Anderson ’783, those elements, as known to them or as disclosed by other prior art identified in the cover pleading. |
| [70b] wherein the at least two microphones are configured to pick up (i) at least audio input from at least the user and (ii) at least environmental audio input associated with environmental sound in the vicinity of the head-worn structure, and | Anderson ’783 in view of Nemirovski ’379 expressly or inherently discloses “wherein the at least two microphones are configured to pick up (i) at least audio input from at least the user and (ii) at least environmental audio input associated with environmental sound in the vicinity of the head-worn structure.”<br><br>*See* above at claim [50a].<br><br>For example, Anderson discloses that the auxiliary earpiece microphone can pick up audio from the “bone conduction path…between the user’s mouth and ear.” *See id.* at 26:57-59. The POSITA would have understood that a microphone for picking up sounds from a bone conduction path between a user’s mouth and ear would pick up audio input from the user. Anderson further discloses that the auxiliary earpiece microphone is included in order to avoid transmitting signals from the ambient audio environment over the secondary wireless link. *See id.* at 26:55-57. The POSITA would have understood this to mean that the primary earpiece microphone does pick up sounds from the ambient audio environment in the vicinity of the earpiece.<br><br>Anderson ’783 at 26:54–65<br>Secondary link audio considerations: In some applications, a user may not wish to transmit signals from the ambient audio environment over the secondary wireless link. In such cases, an auxiliary earpiece microphone which favors the "bone conduction" path over the normal "air path" between the user's mouth and ear can be used. To save space, the auxiliary microphone may be housed in the same miniature case as the primary earpiece microphone. Alternatively, when two earpieces are used, unwanted ambient sources can be "nulled out" in the RPU DSP 948 by digital signal processing techniques well known in the art (e.g., the equivalent of speakerphone circuitry).<br><br>Nemirovski ’379 at 4:27–41<br>The communications system 10 includes an ear microphone assembly, or earset 18, having a microphone 20 and a speaker 22 supported by a housing 30 (FIG. 3). The physical arrangement of the earset 18 will be described in more detail below. The microphone 20 is used to detect sounds emanating or coming from the |

| Claims | Prior Art |
| --- | --- |
| | ear (sometimes referred to as air pressure changes within the ear) of the user that result from speech of the user. The microphone 20 converts those detections into an electrical signal. The electrical signal is optionally amplified by an amplifier 24. Next, the amplified electrical signal is received by the communication device 14 via an appropriate interface adapter 26. The interface adapter 26 can be, for example, a jack or other electrical connector received by a corresponding receptacle of the communication device 14.<br><br>A POSITA would have been motivated to combine the teachings of Anderson and Nemirovski to meet the claim limitations with a reasonable expectation of success for the reasons described above with respect to claim 11.<br><br>To the extent that Anderson ’783 and Nemirovski ’379 does not disclose any elements of this claim limitation, it would have been obvious to a person having ordinary skill in the art to combine, with the teachings of Anderson ’783, those elements, as known to them or as disclosed by other prior art identified in the cover pleading. |
| [70c] wherein the processing unit is configured to: determine an environmental sound level based on at least the environmental audio input; and | Anderson ’783 in view of Victorian ’313 expressly or inherently discloses “wherein the processing unit is configured to: determine an environmental sound level based on at least the environmental audio input.”<br><br>*See* above at claim [64d].<br><br>The citations provided below discuss Victorian ’313’s example disclosures with respect to this limitation. |

| Claims | Prior Art |
|---|---|
| | Victorian ’313 at FIG. 4B<br> 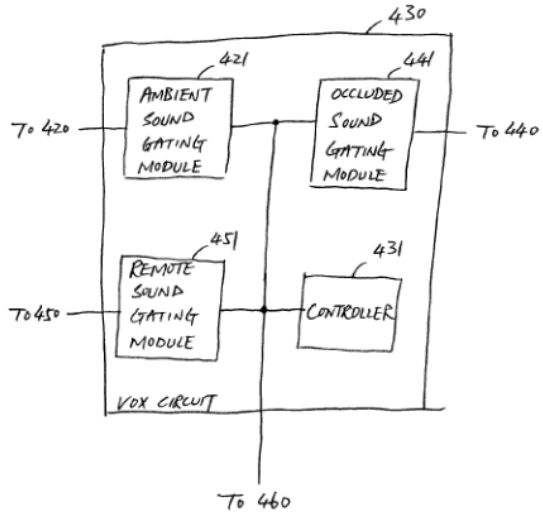 <br><br>Victorian ’313 at [0021]<br>FIG. 4B is a block diagram showing one embodiment of portions of a voice operated exchange (VOX) circuit included in the single ear-level device of FIG. 1.<br><br>Victorian ’313 at [0044]<br>Ear-level device 110 includes an external microphone 420, an ear canal microphone 440, an ear canal speaker 470, a processor 460, a wireless transceiver 450, an antenna 455, a voice operated exchange (VOX) circuit 430, and a battery 480. External microphone 420 picks up ambient sound such that a hearing impaired person wearing ear-level device 110 is not “isolated” when communicating to remote device 190. Thus, ear-level device enables the hearing impaired person to talk to another person either directly (if the other person is nearby) or through a device such as a cell phone. Ear canal microphone 440 detects sound from the ear canal. The sound includes primarily speech of the person wearing ear-level device 110. Ear canal speaker 470 transmits sound received from remote device 190 and/or external microphone 420 to the same ear canal. In one embodiment, ear canal microphone 440 and ear canal speaker 470 are implemented as one physical device. Processor 460 converts the sound picked up from the ear canal to an electrical signal to be transmitted to remote device 190, and converts the signals received from remote device 190 and/or external |

| Claims | Prior Art |
| --- | --- |
| | microphone 420 to a sound audible to the person wearing ear-level device 110. In one embodiment, processor 460 includes one or more of amplification circuitry, filtering circuitry, acoustic feedback reduction circuitry, noise reduction circuitry, and tone control circuitry, among other circuits performing signal processing functions as known in the art. In one embodiment, processor 460 includes a speech recognition module to enhance the audio signal received by and/or transmitted from ear-level device 110. Wireless transceiver 450 and antenna 455 form a telemetry interface supporting telemetry link 195 between ear-level device 110 and remote device 190. Wireless transceiver 450 includes a wireless transmitter and a wireless receiver. The wireless transmitter receives the electrical signal representing the sound picked up from the ear canal from processor 460 and transmits an outgoing wireless signal representing the same sound to remote device 190. The wireless receiver receives an incoming wireless signal representing a remote sound from remote device 190 and transmits an electrical signal representing the remote sound to processor 460. Telemetry link 195 provides for bi-directional communication allowing simultaneous signal transmission, in both directions, between ear-level device 110 and remote device 190. VOX circuit 430 activates a major portion of ear-level device 110 only when sound is detected by at least one of external microphone 420, ear canal microphone 440, and wireless transceiver 450. In one embodiment, VOX circuit 430 includes a voice-controlled switch connecting between battery 480 and the portions of ear-level device 110 that are voice activated. The switch is driven by the sound detected by at least one of external microphone 420, ear canal microphone 440, and wireless transceiver 450. It is turned on when sound detected by external microphone 420 exceeds a predetermined threshold, when sound detected by ear canal microphone 440 exceeds another predetermined threshold, and/or when wireless transceiver 450 receives the incoming wireless signal representing the remote sound. In one embodiment, as discussed with respect to FIG. 4B below, VOX circuit 430 gates or attenuates one or more sounds detected by external microphone 420, ear canal microphone 440, and wireless transceiver 450, to eliminate or reduce echo and ringing caused by the loop formed by ear canal speaker 470 and ear canal microphone 440. Battery 480 supplies the power needed for the operation of ear-level device 110. In one embodiment, battery 480 is a rechargeable battery that can be recharged without being taken out from ear-level device 110.<br><br>Victorian ’313 at [0045]<br>FIG. 4B is a block diagram showing one embodiment of portions of VOX circuit 430. In this embodiment, VOX circuit 430 includes an ambient sound gating module 421 that blanks or attenuates the sound detected by external microphone 420, an occluded sound gating module 441 that blanks or attenuates the sound detected by ear canal microphone 440, a remote sound gating module 451 that blanks or attenuates the sound detected by wireless transceiver 450, and controller 431 to coordinate the states of the gating modules. Because ear canal microphone 440 is capable of detecting the sound delivered to the ear canal from ear canal speaker 470, there is a need to avoid echo and/or ringing. For example, a remote sound from remote device |

| Claims | Prior Art |
| --- | --- |
| | 190 delivered to the ear canal may be detected as an occluded sound and transmitted back to remote device 190, causing echo. The gating modules function in a coordinated manner to eliminate or reduce such echo and/or ringing caused by breaking, or applying resistance into, the audio loop formed by ear canal speaker 470 and ear canal microphone 440.<br><br>Victorian ’313 at [0047]<br>Ambient sound gating module 421 includes a voice-driven switch or attenuator driven by the output of a comparator that compares the amplitude of a detected ambient sound with a predetermined threshold for the ambient sound. When the amplitude of the detected ambient sound exceeds the threshold for the ambient sound, and when controller 431 permits, ambient sound gating module 421 is turned on. When the amplitude of the detected ambient sound drops below the threshold for the ambient sound, ambient sound gating module 421 is turned off. In one embodiment, after the amplitude of the detected ambient sound drops below the threshold for the ambient sound, ambient sound gating module 421 is turned off after a predetermined delay.<br><br>The POSITA would have understood that in order to compare an ambient sound to a threshold, an environmental sound level must necessarily be determined.<br><br>The POSITA would have been motivated to combine the teachings of Anderson and Victorian to meet the claim limitations with a reasonable expectation of success. For example, Anderson discloses that its hearing aid system can include an earpiece with two microphones and that certain sounds detected by those microphones can be emphasized over others—for example, “unwanted ambient sources can be ‘nulled out’,” and the system can perform “background noise cancellation.” However, Anderson does not discuss specific techniques for using the outputs of those microphones (e.g., determining an ambient sound level and adjusting audio output accordingly) to achieve these effects. It would have been obvious for the POSITA to look to Victorian to fill in the missing details, as both Anderson and Victorian disclose ear-worn devices for hearing impaired individuals.<br><br>Moreover, Anderson and Victorian share various structural and functional similarities that render the inventions readily combinable. For example, both Anderson and Victorian disclose ear-worn devices for providing audio output to a user. Both devices include similar components, such as microphones, speakers, wireless transceivers, and control circuitry. Accordingly, combining the teachings of Anderson and Victorian would involve combining known components to yield predictable results.<br><br>To the extent that Anderson ’783 and Victorian ’313 does not disclose any elements of this claim limitation, it would have been obvious to a person having ordinary skill in the art to combine, with the teachings of |

| Claims | Prior Art |
| --- | --- |
| | Anderson ’783 and Victorian ’313, those elements, as known to them or as disclosed by other prior art identified in the cover pleading. |
| [70d] amplify at least a portion of the audio input from the first microphone, with the amplification being at least in part dependent on the environmental sound level. | Anderson ’783 in view of Victorian ’313 expressly or inherently discloses “amplify at least a portion of the audio input from the first microphone, with the amplification being at least in part dependent on the environmental sound level.”<br><br>*See* above at claims [12a]; [51c]; [51d].<br><br>Victorian discloses that an environmental sound level can be used to modify audio signals provided to a processor 460—the ambient sound gating module 421 is gated on (i.e., ambient sounds are allowed to pass to a processor 460) when the environmental sound level exceeds a threshold, and the ambient sound gating module 421 is gated off (i.e., ambient sounds are blanked or attenuated) when the environmental sound level is below the threshold. ¶[0045], [0047], FIG. 4B Victorian further discloses that the processor 460 includes amplification circuitry. ¶[0044]. Since the sounds provided to the processor depend on the environmental sound level, and the processor can amplify the received sounds for outputting to a speaker, the POSITA would have understood that audio output from the first speaker is amplified dependent at least in part on the environmental sound level.<br><br>It would have been obvious to a POSITA to combine the teachings of Anderson ’783 and Victorian ’313 for the reasons set forth above with respect to claim 70.<br><br>To the extent that Anderson ’783 and Victorian ’313 does not disclose any elements of this claim limitation, it would have been obvious to a person having ordinary skill in the art to combine, with the teachings of Anderson ’783 and Victorian ’313, those elements, as known to them or as disclosed by other prior art identified in the cover pleading. |
| [71a] A personal audio system as recited in claim 24, wherein the head-worn wearable electronic device comprises at least a first microphone, a second microphone and a processing unit, | Anderson ’783 in view of Victorian ’313 expressly or inherently discloses this limitation for the same reasons as for element [70a].<br><br>*See* above at claim [70a].<br><br>It would have been obvious to a POSITA to combine the teachings of Anderson ’783 and Victorian ’313 for the reasons set forth above with respect to claims 51 and 70.<br><br>To the extent that Anderson ’783 and Victorian ’313 does not disclose any elements of this claim limitation, it would have been obvious to a person having ordinary skill in the art to combine, with the teachings of Anderson ’783, those elements, as known to them or as disclosed by other prior art identified in the cover pleading. |

| Claims | Prior Art |
| --- | --- |
| [71b] wherein the first microphone is configured to pick up at least audio sound from at least the user, wherein the second microphone is configured to pick up at least ambient noise associated with an environment in the vicinity of the head-worn wearable electronic device, and | Anderson ’783, alone or in view of Nemirovski, expressly or inherently discloses this limitation for the same reasons as for element [70b].<br>*See* above at claim [70b].<br>It would have been obvious to a POSITA to combine the teachings of Anderson ’783 and Nemirovski for the reasons set forth above with respect to claim 70.<br>To the extent that Anderson ’783 and Nemirovski ’379 does not disclose any elements of this claim limitation, it would have been obvious to a person having ordinary skill in the art to combine, with the teachings of Anderson ’783, those elements, as known to them or as disclosed by other prior art identified in the cover pleading. |
| [71c] wherein the processing unit is configured to: determine an ambient noise level based on at least the ambient noise; and | Anderson ’783 in view of Victorian ’313 expressly or inherently discloses this limitation for the same reasons as for element [70c].<br>*See* above at claim [51c].<br>It would have been obvious to a POSITA to combine the teachings of Anderson ’783 and Victorian ’313 for the reasons set forth above with respect to claims 51 and 70.<br>To the extent that Anderson ’783 and Victorian ’313 does not disclose any elements of this claim limitation, it would have been obvious to a person having ordinary skill in the art to combine, with the teachings of Anderson ’783, those elements, as known to them or as disclosed by other prior art identified in the cover pleading. |
| [71d] modify at least a portion of the audio sound picked-up via the first microphone, with the modification being at least in part dependent on the ambient noise level. | Anderson ’783 in view of Victorian ’313 expressly or inherently discloses this limitation for the same reasons as for element [70d].<br>*See* above at claim [51d].<br>It would have been obvious to a POSITA to combine the teachings of Anderson ’783 and Victorian ’313 for the reasons set forth above with respect to claims 51 and 70.<br>To the extent that Anderson ’783 and Victorian ’313 does not disclose any elements of this claim limitation, it would have been obvious to a person having ordinary skill in the art to combine, with the teachings of Anderson ’783 and Victorian ’313, those elements, as known to them or as disclosed by other prior art identified in the cover pleading. |

| Claims | Prior Art |
| --- | --- |
| [72a] A personal audio system as recited in claim 24, wherein the head-worn wearable electronic device comprises at least a first microphone, a second microphone and a processing unit, | Anderson ’783 in view of Jannard expressly or inherently discloses this limitation for the same reasons as for element [70a].<br>*See* above at claim [70a].<br>A POSITA would have been motivated to combine the teachings of Anderson ’783 and Jannard to meet the claim limitations with a reasonable expectation of success for the reasons described above with respect to claim 51.<br>To the extent that Anderson ’783 and Jannard ’526 do not disclose any elements of this claim limitation, it would have been obvious to a person having ordinary skill in the art to combine, with the teachings of Anderson ’783, those elements, as known to them or as disclosed by other prior art identified in the cover pleading. |
| [72b] wherein the first microphone is configured to pick up at least audio sound from at least the user, wherein the second microphone is configured to pick up at least ambient noise associated with an environment in the vicinity of the head-worn wearable electronic device, | Anderson ’783 in view of Nemirovski expressly or inherently discloses this limitation for the same reasons as for element [70b].<br>*See* above at claim [70b].<br>A POSITA would have been motivated to combine the teachings of Anderson ’783 and and Nemirovski to meet the claim limitations with a reasonable expectation of success for the reasons described above with respect to claim 51.<br>To the extent that Anderson ’783 and Nemirovski do not disclose any elements of this claim limitation, it would have been obvious to a person having ordinary skill in the art to combine, with the teachings of Anderson ’783, those elements, as known to them or as disclosed by other prior art identified in the cover pleading. |
| [72c] wherein the processing unit is configured to: determine an ambient noise level based on at least the ambient noise; and | Anderson ’783 in view of Victorian ’313 expressly or inherently discloses this limitation for the same reasons as for element [70c].<br>*See* above at claim [51c].<br>A POSITA would have been motivated to combine the teachings of Anderson ’783 and Victorian ’313 to meet the claim limitations with a reasonable expectation of success for the reasons described above with respect to claim 51.<br>To the extent that Anderson ’783 and Victorian ’313 do not disclose any elements of this claim limitation, it would have been obvious to a person having ordinary skill in the art to combine, with the teachings of Anderson ’783, those elements, as known to them or as disclosed by other prior art identified in the cover pleading. |

| Claims | Prior Art |
|---|---|
| [72d] modify at least a portion of the audio sound picked-up via the first microphone, with the modification being at least in part dependent on the ambient noise level, | Anderson ’783 in view of Victorian ’313 expressly or inherently discloses this limitation for the same reasons as for element [70d].<br>*See* above at claim [51d].<br>A POSITA would have been motivated to combine the teachings of Anderson ’783 Victorian ’313 to meet the claim limitations with a reasonable expectation of success for the reasons described above with respect to claim 51.<br>To the extent that Anderson ’783 and Victorian ’313 do not disclose any elements of this claim limitation, it would have been obvious to a person having ordinary skill in the art to combine, with the teachings of Anderson ’783, those elements, as known to them or as disclosed by other prior art identified in the cover pleading. |
| [72e] wherein the head-worn wearable electronic device comprises at least a rechargeable battery and at least one conductive element, | Anderson ’783 in view of Jannard ’526 expressly or inherently discloses this limitation for the same reasons as for element [26a].<br>*See* above at claim [26a].<br>A POSITA would have been motivated to combine the teachings of Anderson ’783 and Jannard ’526 to meet the claim limitations with a reasonable expectation of success for the reasons described above with respect to claim 26.<br>To the extent that Anderson ’783 and Jannard ’526 do not disclose any elements of this claim limitation, it would have been obvious to a person having ordinary skill in the art to combine, with the teachings of Anderson ’783, , those elements, as known to them or as disclosed by other prior art identified in the cover pleading. |
| [72f] wherein the rechargeable battery is able to be electrically coupled via the at least one conductive element to a charging apparatus and charged when the head-worn wearable electronic device is placed within the charging apparatus, | Anderson ’783 in view of Jannard ’526 expressly or inherently discloses this limitation for the same reasons as for element [26b].<br>*See* above at claim [26b].<br>A POSITA would have been motivated to combine the teachings of Anderson ’783 and Jannard ’526 to meet the claim limitations with a reasonable expectation of success for the reasons described above with respect to claim 51.<br>To the extent that Anderson ’783 and Jannard ’526 do not disclose any elements of this claim limitation, it would have been obvious to a person having ordinary skill in the art to combine, with the teachings of Anderson ’783, those elements, as known to them or as disclosed by other prior art identified in the cover pleading. |

| Claims | Prior Art |
|---|---|
| [72g] wherein the mobile communication device is configured to wirelessly communicate with the head-worn wearable electronic device over a wireless network, and | Anderson ’783 expressly or inherently discloses this limitation for the same reasons as for element [27a].<br>*See* above at claim 27.<br>To the extent that Anderson ’783 does not disclose any elements of this claim limitation, it would have been obvious to a person having ordinary skill in the art to combine, with the teachings of Anderson ’783, those elements, as known to them or as disclosed by other prior art identified in the cover pleading. |
| [72h] wherein the mobile communication device is or includes a mobile phone, | Anderson ’783 expressly or inherently discloses this limitation for the same reasons as for element [14a].<br>*See* above at claim 14.<br>To the extent that Anderson ’783 does not disclose any elements of this claim limitation, it would have been obvious to a person having ordinary skill in the art to combine, with the teachings of Anderson ’783, those elements, as known to them or as disclosed by other prior art identified in the cover pleading. |
| [72i] wherein the head-worn wearable electronic device is configured to receive a voice input via the first microphone, determine a requested operation from the voice input using voice recognition, and control an operation by the head-worn wearable electronic device based on the requested operation. | Anderson ’783 in view of Jannard ’526 or Seshadri expressly or inherently discloses this limitation for the same reasons as for element [53b].<br>*See* above at claim 53.<br>A POSITA would have been motivated to combine the teachings of Anderson ’783, Jannard ’526 or Seshadri to meet the claim limitations with a reasonable expectation of success for the reasons described above with respect to claim 53.<br>To the extent that Anderson ’783, Jannard ’526 or Seshadri do not disclose any elements of this claim limitation, it would have been obvious to a person having ordinary skill in the art to combine, with the teachings of Anderson ’783, those elements, as known to them or as disclosed by other prior art identified in the cover pleading. |
| [73a] A personal audio system as recited in claim 72, wherein the head-worn wearable electronic device comprises: an infrared emitter configured to at least direct infrared signals towards the user when the head-worn wearable electronic device is being worn; | Anderson ’783 in view of Abreu ’960 or Luo or Irvin, expressly or inherently discloses “[a] personal audio system as recited in claim 72, wherein the head-worn wearable electronic device comprises: an infrared emitter configured to at least direct infrared signals towards the user when the head-worn wearable electronic device is being worn,” for the same reasons as previously set forth for elements [54a]; [54b].<br>*See* above at claims [54a]; [54b].<br>A POSITA would have been motivated to combine the teachings of Anderson ’783 and Abreu ’960 or Luo or Irvin to meet the claim limitations with a reasonable expectation of success for the reasons discussed above with respect to claim 23. |

| Claims | Prior Art |
|---|---|
| [73b] an infrared detector configured to detect infrared radiation reflected back from the user when the head-worn wearable electronic device is being worn; and | Anderson ’783 in view of Abreu or Luo or Irvin , expressly or inherently discloses “an infrared detector configured to detect infrared radiation reflected back from the user when the head-worn wearable electronic device is being worn,” for the same reasons as previously set forth for element [54b].<br>*See* above at claim [54b].<br>A POSITA would have been motivated to combine the teachings of Anderson ’783 and Abreu ’960 or Luo or Irvin to meet the claim limitations for the reasons discussed for claim 23. |
| [73c] electronic circuitry configured to facilitate determining whether the head-worn wearable electronic device is being worn by the user based on at least the detected infrared radiation. | Anderson ’783 in view of Abreu or Luo or Irvin, expressly or inherently discloses “electronic circuitry configured to facilitate determining whether the head-worn wearable electronic device is being worn by the user based on at least the detected infrared radiation,” for the same reasons as previously set forth for element [55a].<br>*See* above at claim 55.<br>A POSITA would have been motivated to combine the teachings of Anderson ’783 and Abreu ’960 or Luo or Irvin to meet the claim limitations for the reasons discussed for claim 23. |
| 74. A personal audio system as recited in claim 73, wherein the electrical coupling of the at least one conductive element with the charging apparatus is supported by at least a magnetic element. | Anderson ’783 in view of Jannard ’526 expressly or inherently discloses “[a] personal audio system as recited in claim 73, wherein the electrical coupling of the at least one conductive element with the charging apparatus is supported by at least a magnetic element,” for the same reasons as previously set forth for element [26c].<br>*See* above at claim [26c].<br>A POSITA would have been motivated to combine the teachings of Anderson ’783 and Jannard ’526 to meet the claim limitations for the reasons discussed for claim 26. |
| [75pre] A personal audio system operable to at least generate customized audio output, comprising: a pair of speakers, each of the speakers being configured to be wearable proximate to an ear of a user; and | To the extent that the preamble is found to be limiting, Anderson ’783 expressly or inherently discloses “[a] personal audio system operable to at least generate customized audio output,” for instance, for the reasons explained above for element [1pre]. For example, Anderson discloses a hearing aid with an earpiece in communication with a remote processor unit. *See, e.g.,* Anderson ’783 at 1:7–10; FIG. 1.<br>In some embodiments, such as shown in FIG. 2, the earpiece belongs to a head-worn headset 21. *See* Anderson at 4:15-39; FIG. 2. |

| Claims | Prior Art |
|---|---|
| | 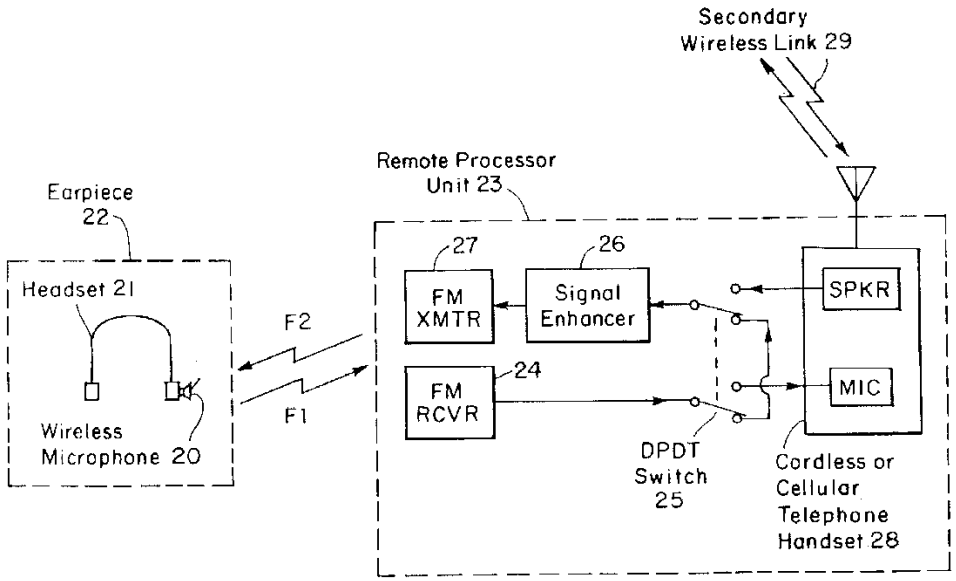 <br>FIG. 2<br><br>The speaker is wearable proximate to the ear of the user when it is included in the headset 21. This system generates a customized audio output for a user of the hearing aid, for example, by enhancing audio signals according to a user's needs. *See, e.g.*, Anderson '783 at 1:55–63.<br><br>Anderson '783 also expressly or inherently discloses "a pair of speakers, each of the speakers being configured to be wearable proximate to an ear of a user." For example, as described for element [24a], "head-worn" means "eyewear or headwear." For example, as explained above at claim 24, a POSITA would have understood from Anderson's disclosures that headset 21 can include a pair of speakers, one for each ear, as shown above; with each speaker wearable near (and thus proximate to) its respective ear, *i.e.*, when the headset is worn.<br><br>As described for element [1a], Anderson further discloses that "a binaural (stereo) system can be constructed based on the same principles as the monaural system." *See id.* at 4:30-33. Accordingly, the POSITA would have understood Anderson to disclose a pair of speakers (i.e., one for each of the user's two ears).<br><br>Anderson illustrates headset 21 and earpiece 22 within the context of a "limited-feature embodiment," shown in FIG. 2. *See* Anderson at 4:15-29. However, a POSITA would have understood headset 21 and earpiece 22 to be combinable with the "full-featured" embodiment of FIG. 1. *See id.* at 3:52-58. This is because Anderson characterizes FIG. 1 and FIG. 2 as showing two preferred embodiments of the same invention; explains that the |

| Claims | Prior Art |
| --- | --- |
| | headset earpiece shown in FIG. 2 is "functionally similar" to the in-ear earpiece 10 of FIG. 1; and further explains that "many other earpiece housing types" can be used in place of the CIC earpiece housing shown in FIG. 1. *See id.* at 3:52-58, 4:15-35. A POSITA would have understood from these disclosures that the FIG. 1 system could be flexibly implemented using various housings for the earpiece, including headset 21.<br><br>A POSITA would have been motivated to use the headset instead of the CIC housing to realize advantages in cost, simplicity, and commercial availability described by Anderson. Even using headset 21 in a full-featured application, it would provide certain advantages over the in-ear embodiment. Unlike some CIC housings, the headset did not need to be customized to fit in a user's ear canal. Additionally, there would have been comfort benefits: many users do not like supporting objects with their ears, a problem addressed by replacing a CIC housing with a headset. And using a larger headset rather than a small in-ear device would make it easier and less expensive to include the processing and communication capabilities of the full-featured application, and would reduce the likelihood of misplacing the device. Anderson provides specific guidance for adapting the headset using "techniques [that] are well known in the art," and notes that schematics and service manuals for the headset were readily available, demonstrating that the POSITA would have had a reasonable expectation of success in making the combination. *See id.* at 4:26-5:60.<br><br>*See* above at claim [1pre], [24pre], [1a], and [24a].<br><br>The following citations show examples of where Anderson '783 discloses this limitation.<br><br>Anderson '783 at Abstract<br>A hearing aid or audio communication system includes an earpiece (10) that can be hidden in the ear canal, and which communicates wirelessly with a remote processor unit, or RPU (16), that enhances audio signals and can be concealed under clothing. Sounds from the environment are picked up by a microphone (12) in the earpiece and sent with other information over a two-way wireless link (17) to the RPU (16). The wireless link (17) uses microwaves for component miniaturization. Furthermore, use of radar technology to implement the wireless link (17), with an RPU (16) interrogator and earpiece (10) transponder, reduces earpiece size and power, as no microwave oscillator is needed in the earpiece (10). Optional secondary wireless link circuitry (19) can be used between the RPU (16) and a cellular telephone system or other sources of information. Electronic voice recognition and response can control system operation. |

| Claims | Prior Art |
| --- | --- |
| | Anderson ’783 at FIG. 1 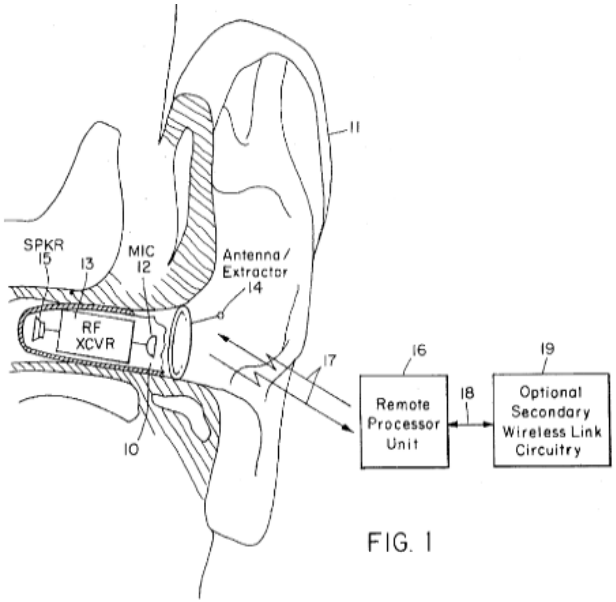  FIG. 1 |

| Claims | Prior Art |
|---|---|
| | Anderson ’783 at FIG. 2<br> 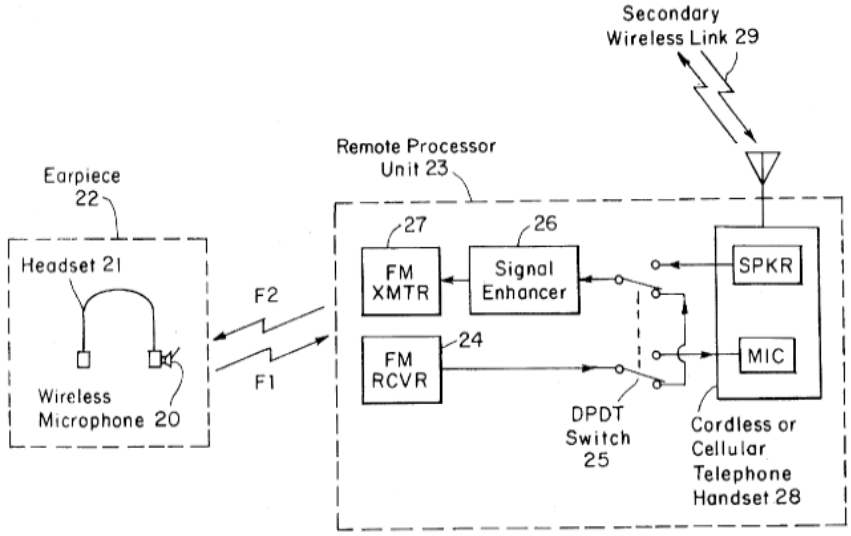 <br><br>FIG. 2<br><br>Anderson ’783 at 1:5–18<br>The present invention is directed to hearing aids, and in particular to a hearing aid having an earpiece housing worn in or at the ear and a remote processor unit (RPU) worn by or located near the user that wirelessly receives signals from and transmits signals to the earpiece. The present invention is also directed to the use of hearing aid systems as wireless communication devices for hands-free cellular telephone and mobile radio communication "handsets," covert operation and control of hearing aids, hearing protection and noise cancellation simultaneous with binaural hearing aid functions, hearing test equipment, location of misplaced hearing aid system components and wireless cochlear implants.<br><br>Anderson ’783 at 1:50–65<br>The present invention uses an audio path that is different from the audio path used by devices in the prior art. The present invention uses a primary two-way wireless link (not a one-way link as in the prior art) between an earpiece worn in or at the user's ear and an RPU worn by or located near the user. In the present invention, audio signals from the environment are picked up by a microphone in the earpiece (not a hand-held microphone as used by wireless hearing aids in the prior art) and transmitted over the primary two-way wireless link to the RPU (instead of going to processor electronics contained in the earpiece, as in basic |

| Claims | Prior Art |
| --- | --- |
| | hearing aids known in the prior art), where the audio signals are enhanced according to the user's needs before transmission over the primary wireless link to the earpiece. Signal processing is performed in the RPU rather than the earpiece to take advantage of relaxed size and power constraints.<br><br>Anderson ’783 at 3:13–18<br>FIG. 1 is a block diagram system overview illustrating how an earpiece (comprising a microphone, RF transceiver, dual-use antenna/extractor and speaker) is worn in the ear, communicates via a primary two-way RF link with an RPU, and also communicates via an optional secondary wireless link to a telephone system.<br><br>Anderson ’783 at 3:52–4:14<br>One preferred embodiment of the invention herein described is shown in block diagram form in FIG. 1. In this figure, the earpiece 10 shown worn in the ear 11 uses a standard completely-in-the-canal (CIC) housing, well known in the art, although many other earpiece housing types known in the art (e.g., behind-the-ear, or BTE) can be used. The earpiece shown in FIG. 1 comprises a microphone 12, RF transceiver 13 with an antenna that doubles as an earpiece extractor 14, and speaker 15. Although the dual-use antenna/extractor arrangement shown in FIG. 1 is often desirable, a separate antenna or antennae can be used in conjunction with many different types of earpiece extractors as appropriate for a particular application. Antennae and extractors can be disguised as ear hair or jewelry (e.g., earrings), or conductive filaments can be permanently implanted in the ear cartilage to act as antennae using a process similar to ear piercing. The earpiece 10 communicates with a remote processor unit (RPU) 16 via a primary two-way RF link 17, although many other wireless link media (e.g., ultrasonic or infrared) may be used instead. The RPU is typically worn under clothing (e.g., carried in a pocket or purse), but may also be worn in plain sight (e.g., on a belt) if desired. The RPU 16 may be connected (via wired or wireless means 18) to optional secondary wireless link circuitry 19 that allows wireless communication between the RPU and other sources of information (e.g., the general subscriber telephone network) via a secondary wireless link. Note that the optional secondary wireless link circuitry 19 may or may not be contained within the RPU case 70 of FIG. 7.<br><br>Anderson ’783 at 4:30–33<br>Although the system described here is monaural, it will be clear to those skilled in the art that a binaural (stereo) system can be constructed based on the same principles as the monaural system.<br><br>Anderson ’783 at 5:3–21<br>During normal operation, speech signals from a nearby talker (and other signals in the ambient audio |

| Claims | Prior Art |
|---|---|
| | environment) are picked up by the earpiece wireless microphone 20 and transmitted to the RPU FM receiver 24. The RPU FM receiver 24 output level may be adjusted using the RPU FM receiver 24 volume control. The resulting electrical waveform representing signals from the nearby talker travels through the DPDT switch 25, which is set to the lower position as shown in FIG. 2, to the signal enhancer 26. The signal enhancer 26 may be, for example, a voice changer device that varies the pitch of a received speech signal according to the setting of pushbutton controls located on the RPU signal enhancer 26. The speech signal's pitch can then be raised or lowered as desired to help compensate for a user's hearing loss relative to a particular talker's voice characteristics. The modified speech signal travels from the RPU signal enhancer 26 to the RPU FM transmitter 27, and finally to the earpiece headset 21 receiver where the signal is converted to acoustic waves heard by the user.<br><br>Anderson ’783 at 22:61–23:35<br>Details of normal system operation: During normal operation of the hearing aid with wireless remote processor, sounds from the ambient environment are picked up by a microphone 12 in the earpiece 10 and transmitted with other information (e.g., data representing the earpiece battery 860 voltage as obtained by an A/D 865 converter and transmitted under control of the earpiece ASIC 845 in the auxiliary bit of many successive replies via the reply data register 825) over a primary two-way wireless link 17 to the RPU 16, where the audio signals are enhanced according to the user's needs by the RPU DSP 948. Signal enhancement is achieved via any of a number of techniques well known in the art that use the capabilities of the general-purpose RPU DSP 948. The enhanced audio signals may be combined with other information (e.g., a synthesized voice, generated within the DSP 948, warning that the aforementioned earpiece battery voltage is low) and transmitted from the RPU 16 over the primary wireless link 17 to the earpiece 10, where they are converted by a speaker 15 to sounds that can only be heard by the user 11. Art auxiliary speaker can be supplied in the RPU 16 as a peripheral 950 device that allows people other than the user to hear the same sounds as those produced by the earpiece speaker 15, if desired (as, e.g., when a person other than the user wishes to use the system's optional cellular telephone capabilities). A different, optional secondary two-way wireless link (shown as part of the RPU in FIG. 9 as secondary wireless link circuitry 944, or connected to the RPU by a wired or other, e.g. infrared, wireless link 18 and shown as optional secondary wireless link circuitry 19 in FIG. 1) can be used for communication between the RPU and a cellular telephone system or other sources of information. An RPU keyboard suitable for covert data entry 72, or voice recognition capabilities in the RPU (implemented, e.g., using any of a number of techniques well known in the art that use the general-purpose RPU DSP 948), can be used to control hearing aid parameters (such as amplification level set by the RPU DSP 948) and telephone dialing functions (e.g., automatic dialing of a predefined telephone number using information stored in the RPU DSP 948) in a manner that can be made |

| Claims | Prior Art |
|---|---|
| | imperceptible to a casual observer if desired.<br><br>Anderson ’783 at 27:4–24<br>Hearing test: The present invention allows hearing tests to be performed via the earpiece normally worn by the user, without the need for additional expensive test equipment. All signal generation capabilities necessary to perform hearing tests are available in the hearing aid system comprising an earpiece 10 and RPU 16. Specifically, the RPU DSP 948 can be used to generate tones of varying frequencies and amplitudes, as well as other signals known to be useful for hearing test purposes (e.g., nonsense syllables) that are converted to acoustic waves by the earpiece. Such tones are used to perform a hearing test that determines appropriate gain vs. frequency parameters for a program stored in the RPU DSP 948 that performs signal enhancement to compensate for the user's hearing loss. Note that the hearing test program that controls the RPU DSP 948 during the hearing test can be temporarily stored in the RPU DSP 948 for the duration of the test, then deleted upon completion of the test to allow re-use of RPU DSP 948 memory resources during normal operation. The hearing test program may be loaded into the RPU DSP 948 through the secondary wireless link 944 or a wired peripheral link 950.<br><br>To the extent that Anderson ’783 does not disclose any elements of this claim limitation, it would have been obvious to a person having ordinary skill in the art to combine, with the teachings of Anderson ’783, those elements, as known to them or as disclosed by other prior art identified in the cover pleading. |
| [75a] a mobile communication device at least for supporting audio output, the mobile communication device configured to store at least a hearing characteristic associated with the user, the stored hearing characteristic associated with the user at least characterizes hearing impairment regarding the user's ability to hear, | Anderson ’783 expressly or inherently discloses “a mobile communication device at least for supporting audio output, the mobile communication device configured to store at least a hearing characteristic associated with the user, the stored hearing characteristic associated with the user at least characterizes hearing impairment regarding the user's ability to hear,” for the same reasons as previously set forth for element [1b].<br><br>*See* above at claim [1b].<br><br>To the extent that Anderson ’783 does not disclose any elements of this claim limitation, it would have been obvious to a person having ordinary skill in the art to combine, with the teachings of Anderson ’783, those elements, as known to them or as disclosed by other prior art identified in the cover pleading. |
| [75b] the mobile communication device | Anderson ’783 expressly or inherently discloses “the mobile communication device configured to produce customized audio output signals for the user based on at least the stored hearing characteristics associated with |

| Claims | Prior Art |
| --- | --- |
| configured to produce customized audio output signals for the user based on at least the stored hearing characteristics associated with the user such that the customized audio output signals at least compensate for the hearing impairment regarding the user's ability to hear, | the user such that the customized audio output signals at least compensate for the hearing impairment regarding the user's ability to hear," for the same reasons as previously set forth for element [1c].<br><br>*See* above at claim [1c].<br><br>To the extent that Anderson '783 does not disclose any elements of this claim limitation, it would have been obvious to a person having ordinary skill in the art to combine, with the teachings of Anderson '783, those elements, as known to them or as disclosed by other prior art identified in the cover pleading. |
| [75c] the mobile communication device configured to produce the customized audio output signals using at least signal amplification, and the mobile communication device configured to transmit the customized audio output signals to the pair of speakers, | Anderson '783 expressly or inherently discloses "the mobile communication device configured to produce the customized audio output signals using at least signal amplification, and the mobile communication device configured to transmit the customized audio output signals to the pair of speakers," for the same reasons as previously set forth for element [1d] and [1e].<br><br>*See* above at claims [1d]; [1e]; [24e].<br><br>To the extent that Anderson '783 does not disclose any elements of this claim limitation, it would have been obvious to a person having ordinary skill in the art to combine, with the teachings of Anderson '783, those elements, as known to them or as disclosed by other prior art identified in the cover pleading. |
| [75d] wherein each of the speakers is configured to receive at least a portion of the customized audio output signals transmitted by the mobile communication device, and | Anderson '783 expressly or inherently discloses "wherein each of the speakers is configured to receive at least a portion of the customized audio output signals transmitted by the mobile communication device," for the same reasons as previously set forth for elements [1f] and [24f].<br><br>*See* above at claims [1f]; [24f].<br><br>To the extent that Anderson '783 does not disclose any elements of this claim limitation, it would have been obvious to a person having ordinary skill in the art to combine, with the teachings of Anderson '783, those elements, as known to them or as disclosed by other prior art identified in the cover pleading. |
| [75e] wherein each of the speakers is configured to generate at least a portion of the customized audio output | Anderson '783 expressly or inherently discloses "wherein each of the speakers is configured to generate at least a portion of the customized audio output for the user in accordance with at least the portion of the customized audio output signals being received," for the same reasons as previously set forth for elements [1g] and [24g]. |

| Claims | Prior Art |
|---|---|
| for the user in accordance with at least the portion of the customized audio output signals being received. | *See* above at claims [1g]; [24g].<br><br>To the extent that Anderson ’783 does not disclose any elements of this claim limitation, it would have been obvious to a person having ordinary skill in the art to combine, with the teachings of Anderson ’783, those elements, as known to them or as disclosed by other prior art identified in the cover pleading. |
| 76. A personal audio system as recited in claim 75, wherein each of the speakers being configured to be at least partially inserted into an ear of the user. | Anderson ’783 expressly or inherently discloses “[a] personal audio system as recited in claim 75, wherein each of the speakers being configured to be at least partially inserted into an ear of the user.” The following citations show examples of where Anderson ’783 discloses this limitation.<br><br>Anderson ’783 at 3:52–4:14<br>One preferred embodiment of the invention herein described is shown in block diagram form in FIG. 1. In this figure, the earpiece 10 shown worn in the ear 11 uses a standard completely-in-the-canal (CIC) housing, well known in the art, although many other earpiece housing types known in the art (e.g., behind-the-ear, or BTE) can be used. The earpiece shown in FIG. 1 comprises a microphone 12, RF transceiver 13 with an antenna that doubles as an earpiece extractor 14, and speaker 15. Although the dual-use antenna/extractor arrangement shown in FIG. 1 is often desirable, a separate antenna or antennae can be used in conjunction with many different types of earpiece extractors as appropriate for a particular application. Antennae and extractors can be disguised as ear hair or jewelry (e.g., earrings), or conductive filaments can be permanently implanted in the ear cartilage to act as antennae using a process similar to ear piercing. The earpiece 10 communicates with a remote processor unit (RPU) 16 via a primary two-way RF link 17, although many other wireless link media (e.g., ultrasonic or infrared) may be used instead. The RPU is typically worn under clothing (e.g., carried in a pocket or purse), but may also be worn in plain sight (e.g., on a belt) if desired. The RPU 16 may be connected (via wired or wireless means 18) to optional secondary wireless link circuitry 19 that allows wireless communication between the RPU and other sources of information (e.g., the general subscriber telephone network) via a secondary wireless link. Note that the optional secondary wireless link circuitry 19 may or may not be contained within the RPU case 70 of FIG. 7.<br><br>A POSITA would have understood from these disclosures that the speaker of the earpiece can be inserted at least partially into the ear of the user.<br><br>In addition, Nemirovski discloses that in the head-worn apparatus, an interior portion 32 of the housing 30 positions the speaker 22 in the concha 122 of the user’s ear, or within the ear canal. *See* Nemirovski at 6:39-49. It would have been obvious to combine Anderson and Nemirovski for the reasons discussed above. |

| Claims | Prior Art |
| --- | --- |
| | To the extent that Anderson ’783 does not disclose any elements of this claim limitation, it would have been obvious to a person having ordinary skill in the art to combine, with the teachings of Anderson ’783, those elements, as known to them or as disclosed by other prior art identified in the cover pleading. |