US006195048B1

(12) **United States Patent**
Chiba et al.

(10) **Patent No.: US 6,195,048 B1**
(45) **Date of Patent: Feb. 27, 2001**

(54) **MULTIFREQUENCY INVERTED F-TYPE ANTENNA**

(75) Inventors: **Norimichi Chiba**, Hino; **Takashi Amano**, Soka; **Hisao Iwasaki**, Tama, all of (JP)

(73) Assignee: **Kabushiki Kaisha Toshiba**, Kawasaki (JP)

(*) Notice: Subject to any disclaimer, the term of this patent is extended or adjusted under 35 U.S.C. 154(b) by 0 days.

(21) Appl. No.: **09/355,525**

(22) PCT Filed: **Dec. 1, 1998**

(86) PCT No.: **PCT/JP98/05400**

§ 371 Date: **Jul. 29, 1999**

§ 102(e) Date: **Jul. 29, 1999**

(87) PCT Pub. No.: **WO99/28990**

PCT Pub. Date: **Jun. 10, 1999**

(30) **Foreign Application Priority Data**

Dec. 1, 1997 (JP) 9-329824

(51) **Int. Cl.**[7] **H01Q 1/38**

(52) **U.S. Cl.** ..... **343/700 MS**; 343/767

(58) **Field of Search** ..... 343/700 MS, 767, 343/770, 846, 868

(56) **References Cited**

U.S. PATENT DOCUMENTS

4,700,194	*	10/1987	Ogawa et al.	343/700 MS
4,766,440	*	8/1988	Gegan	343/700 MS
5,400,041	*	3/1995	Strickland	343/700 MS
5,986,606	*	11/1999	Kossiavas et al.	343/700 MS

FOREIGN PATENT DOCUMENTS

61-171307	10/1986	(JP) .
64-8823	1/1989	(JP) .
10-93332	4/1998	(JP) .

* cited by examiner

Primary Examiner—Tan Ho
(74) *Attorney, Agent, or Firm*—Finnegan, Henderson, Farabow, Garrett & Dunner, L.L.P.

(57) **ABSTRACT**

A multifrequency inverted F-type antenna which can receive muntifirequency band radio waves without the enlargement of its shape. A cut-out part (**12***b*) is formed in an emission conductor (**12**) one end of which is connected to a short-circuit plate (**13**) planted in a ground conductor (**11**) and which has a feeding point (**12***a*) to form on the emission conductor (**12**) a first emission conductor (**12-1**) and a second emission conductor (**12-2**) which resonate at respective frequency bands different from each other. By this construction the radio waves of two different frequency bands, i.e. a first frequency band determined by the shape of the first emission conductor (**12-1**) and a second frequency band determined by the shape of the second emission conductor (**12-2**), can be received.

14 Claims, 23 Drawing Sheets

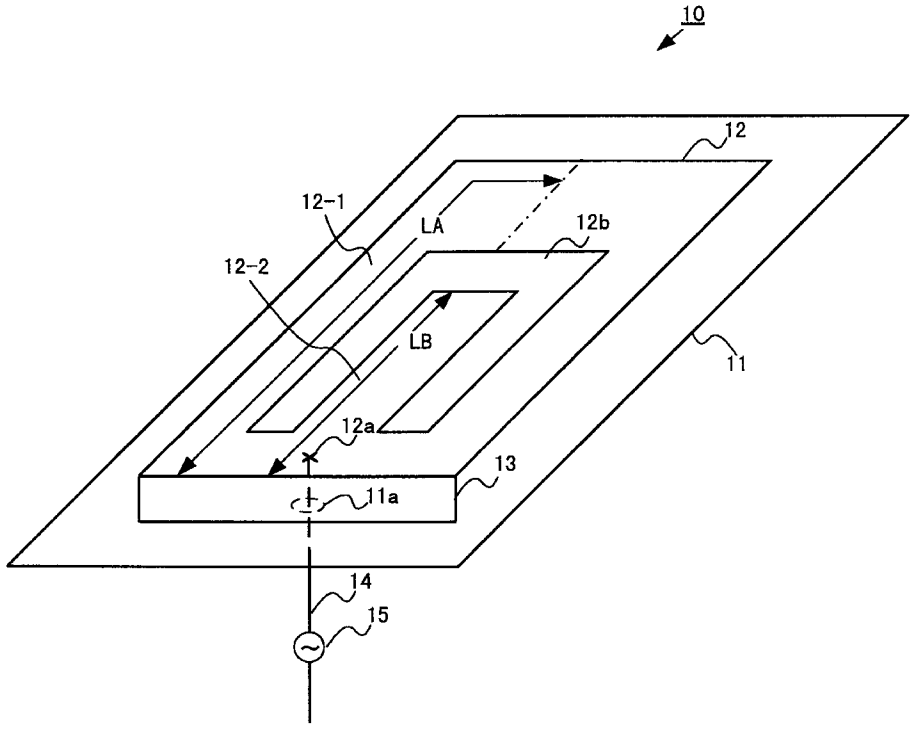

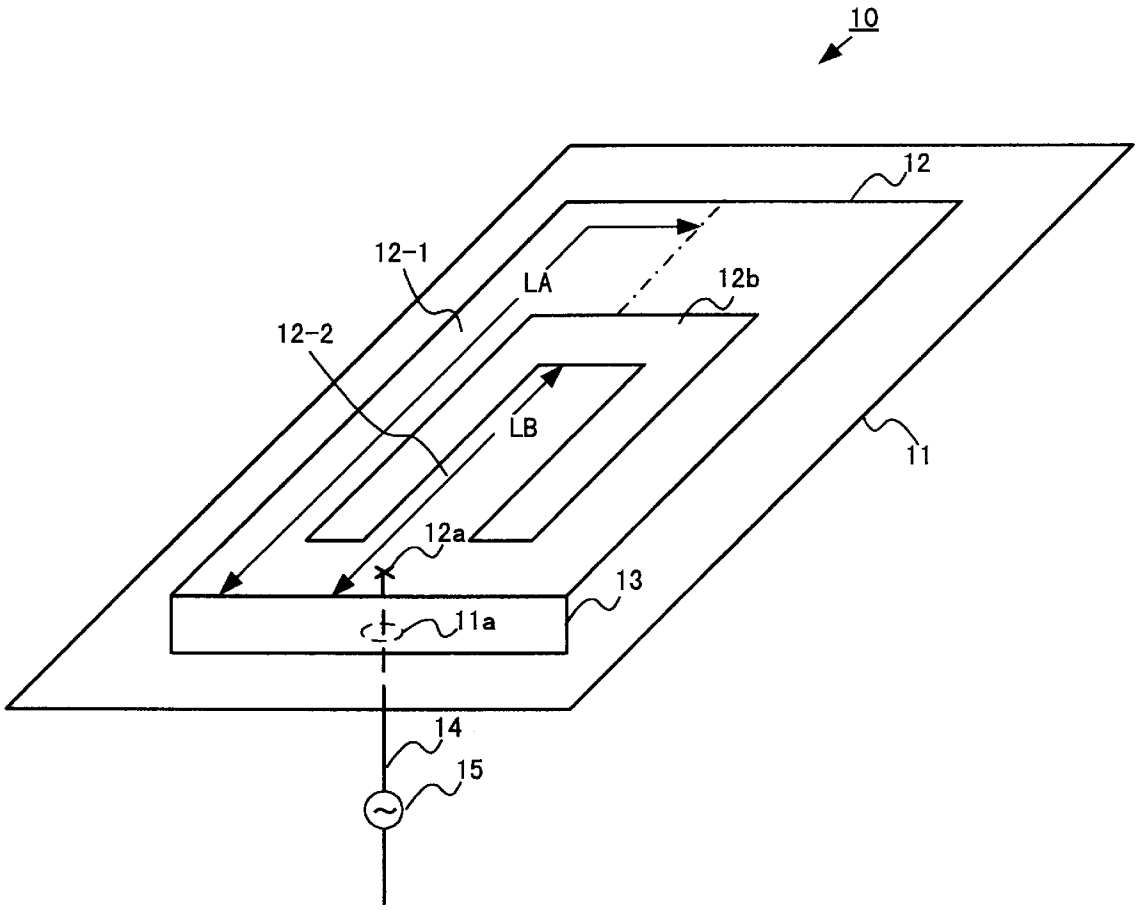

FIG. 1

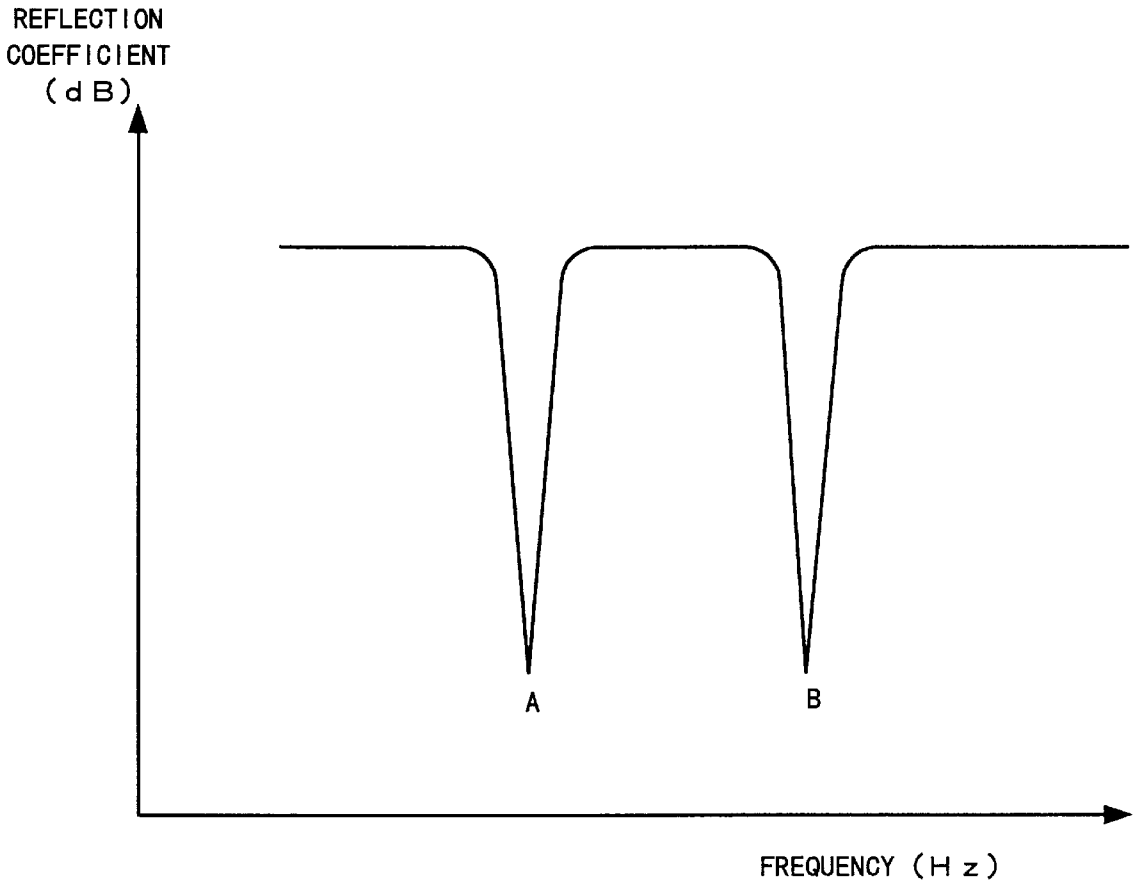

FIG. 2

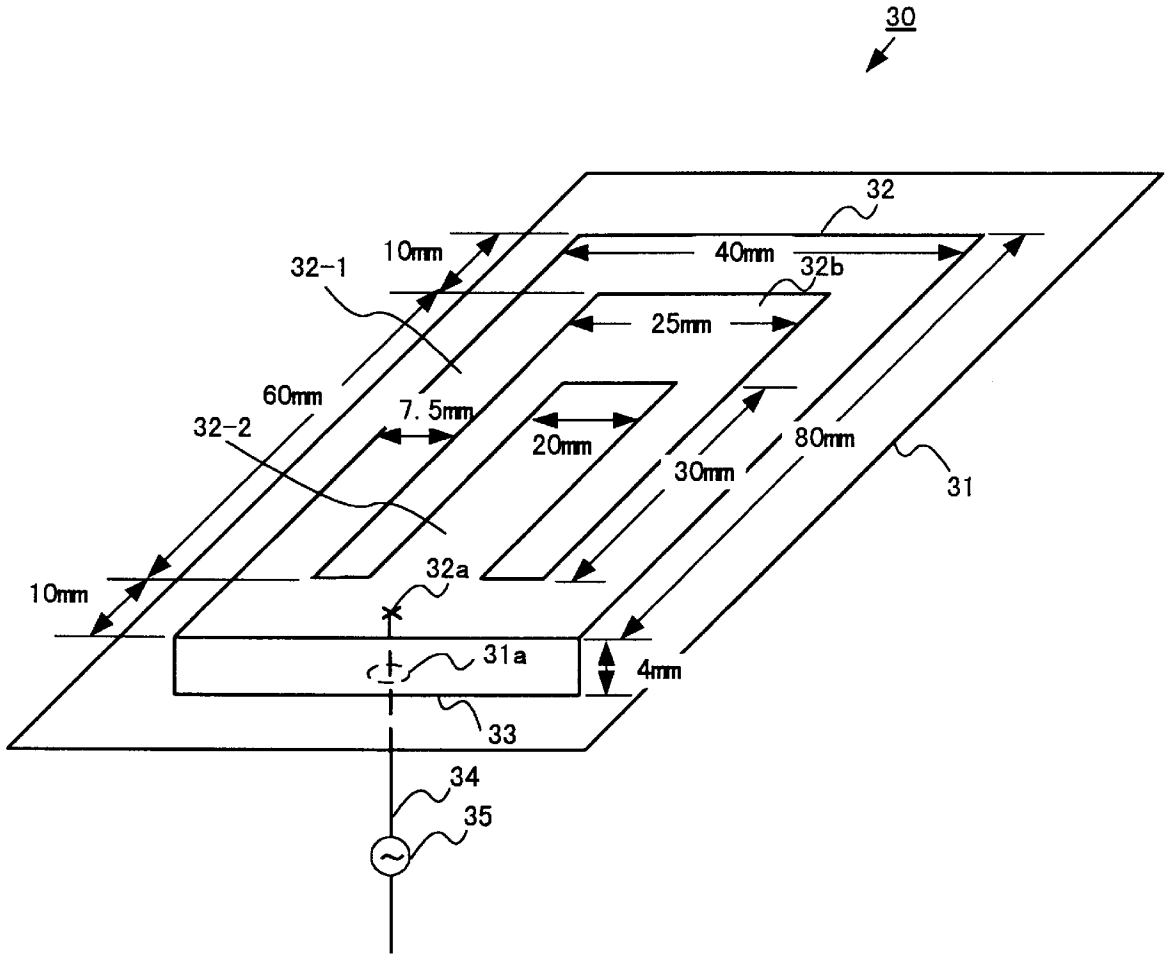
30
32
10mm
40mm
32b
32-1
25mm
60mm
7. 5mm
32-2
20mm
80mm
30mm
31
32a
10mm
31a
4mm
33
34
35

FIG. 3

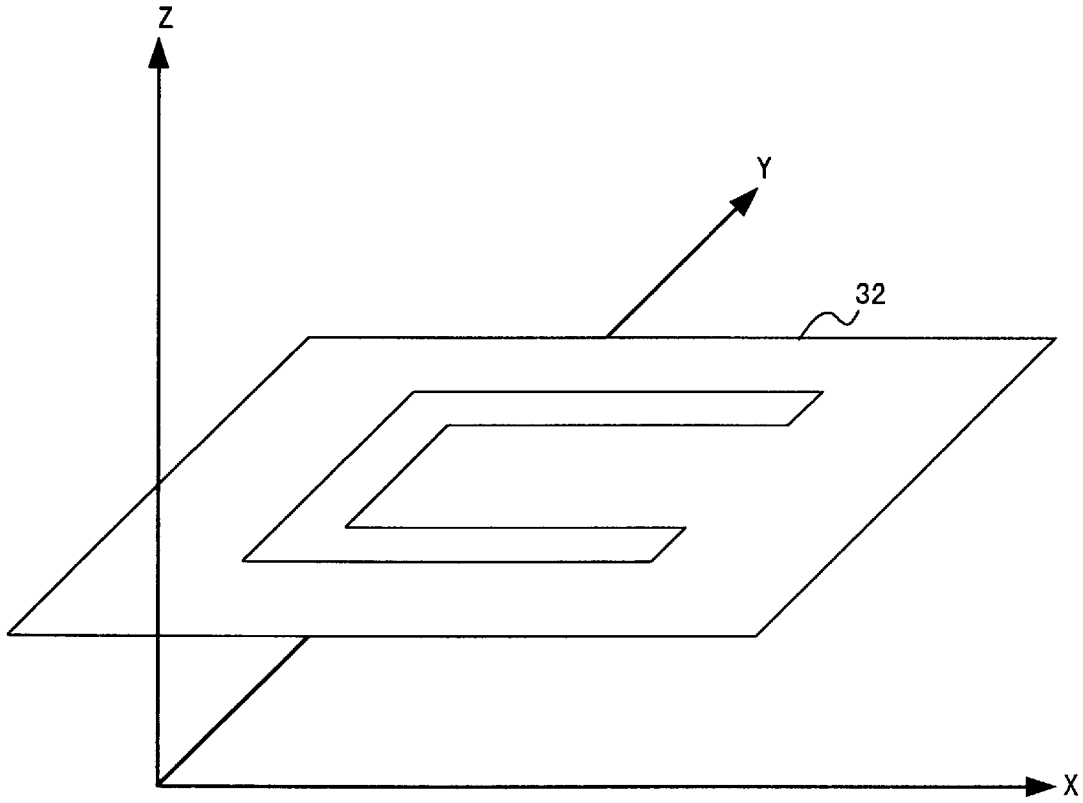

FIG. 4

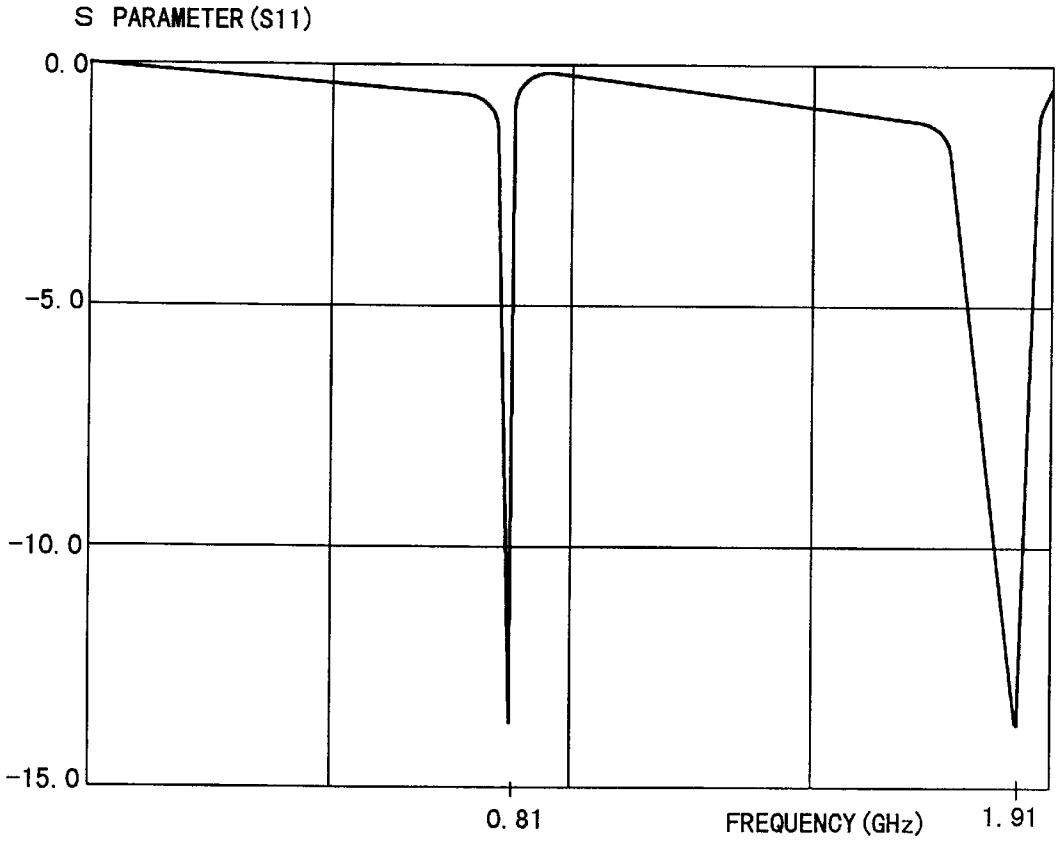

FIG. 5

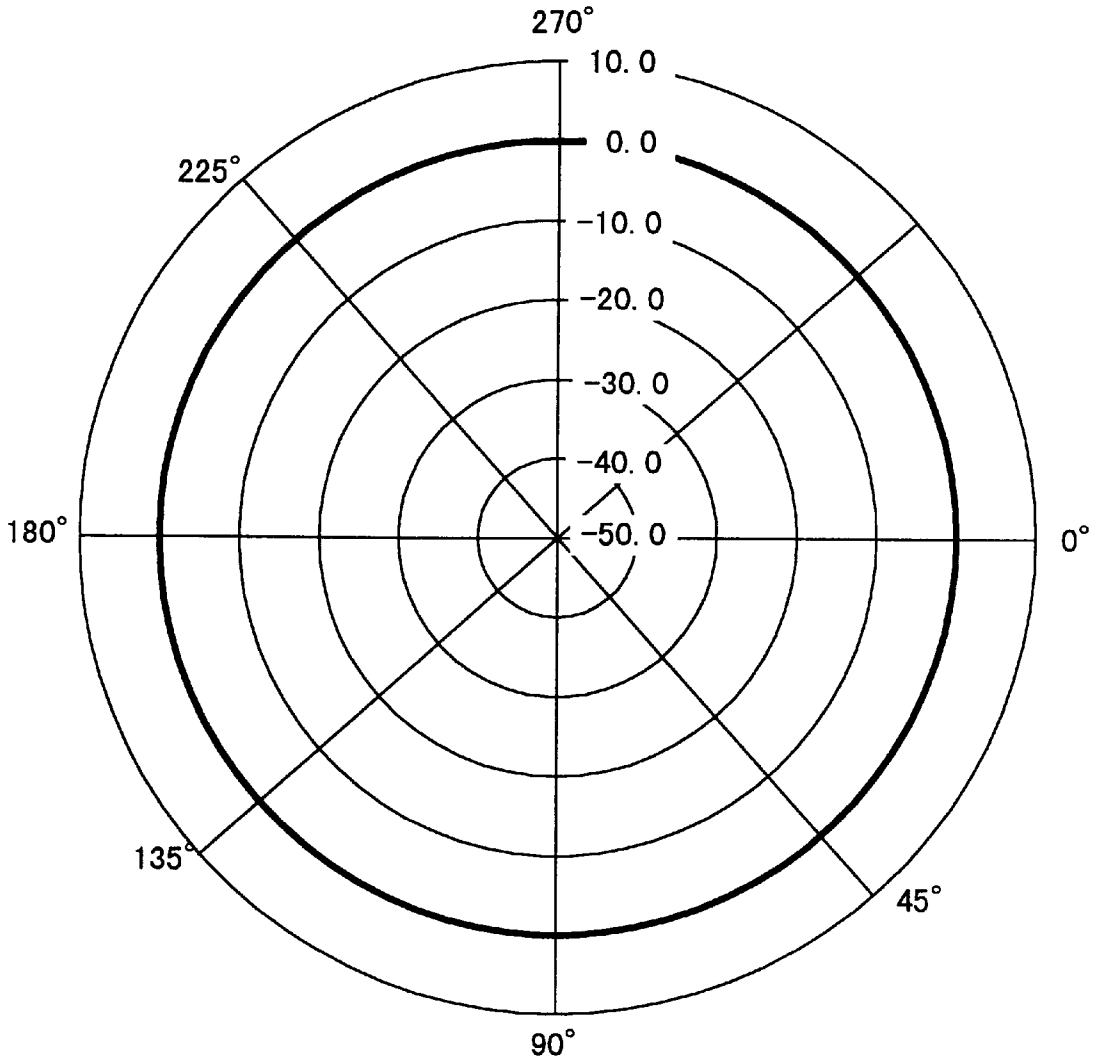

FIG. 6

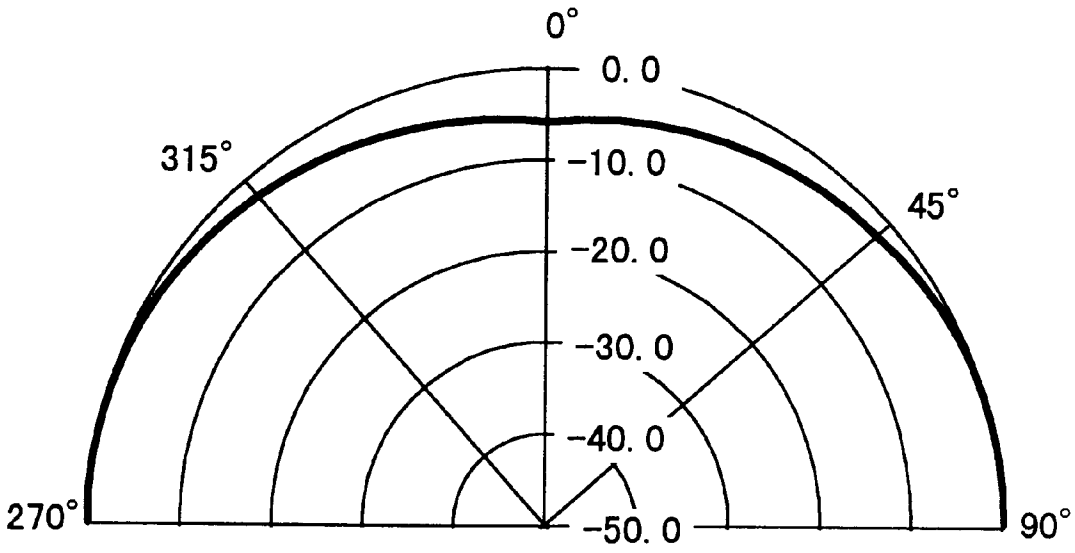

FIG. 7

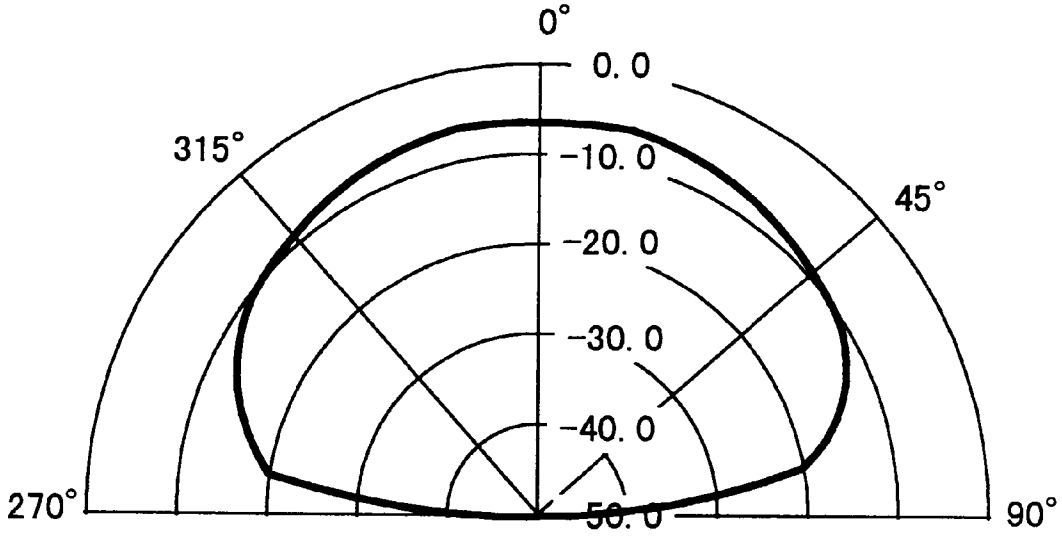

FIG. 8

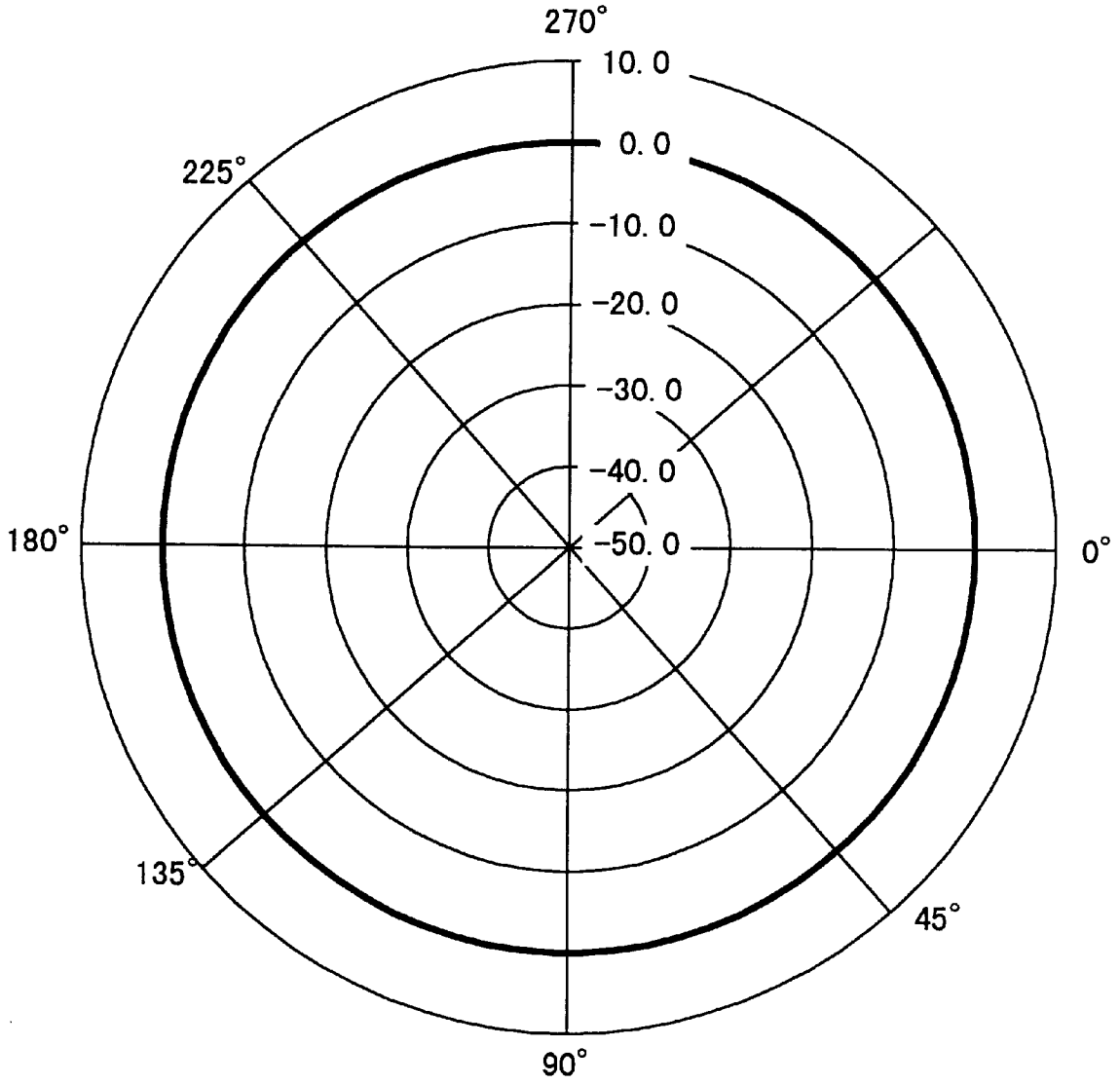

FIG. 9

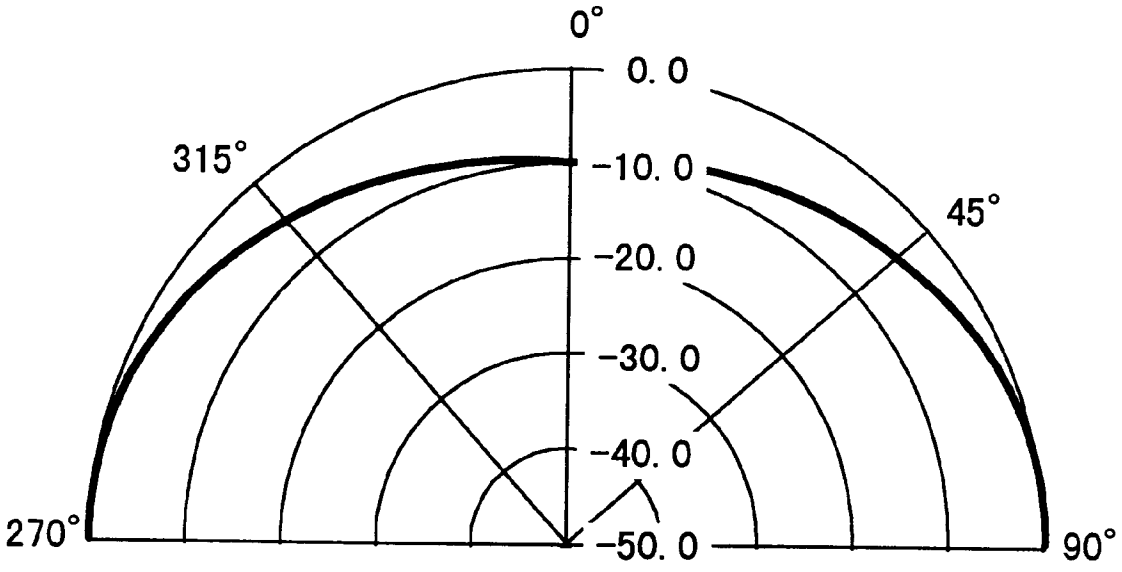

FIG. 10

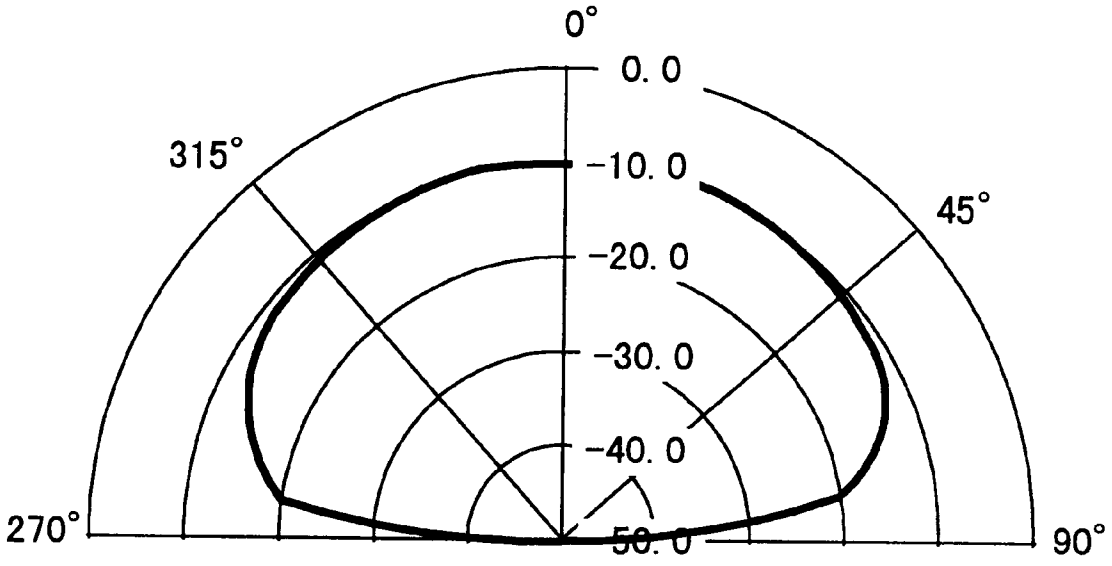

FIG. 11

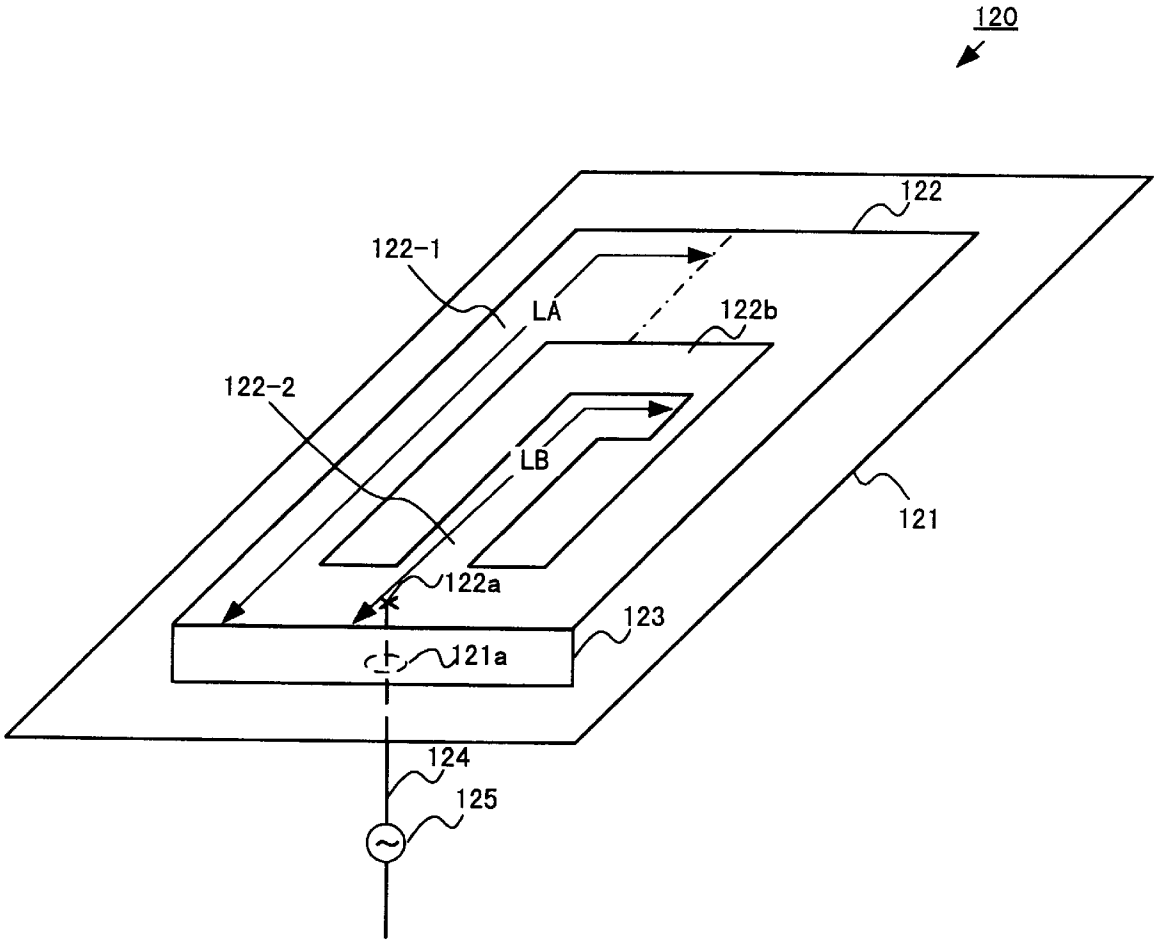

FIG. 12

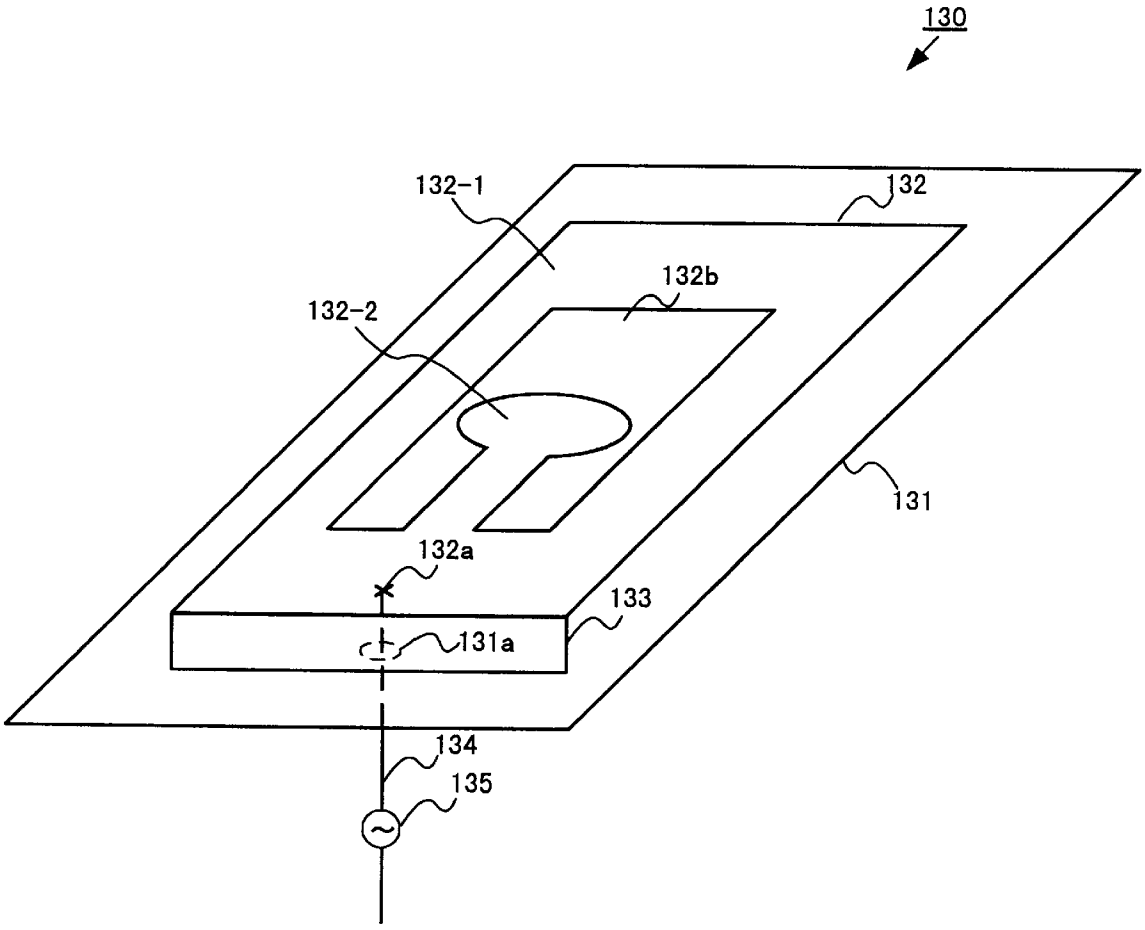

FIG. 13

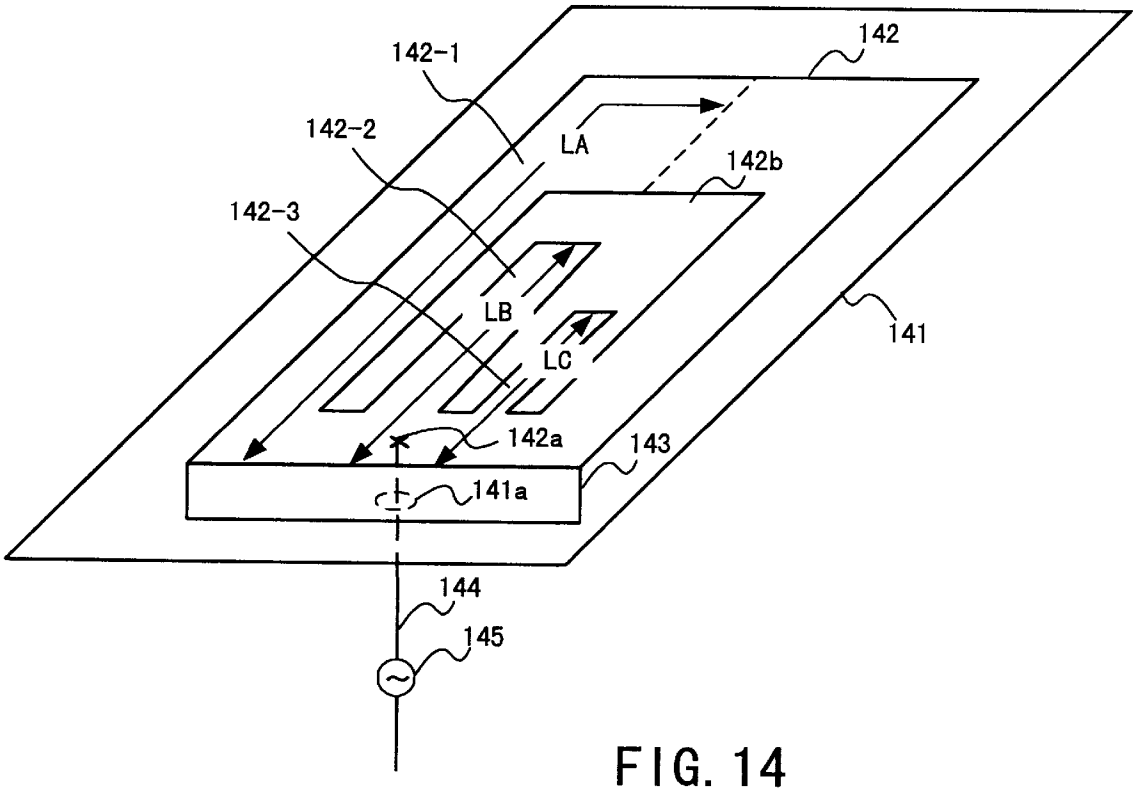

FIG. 14

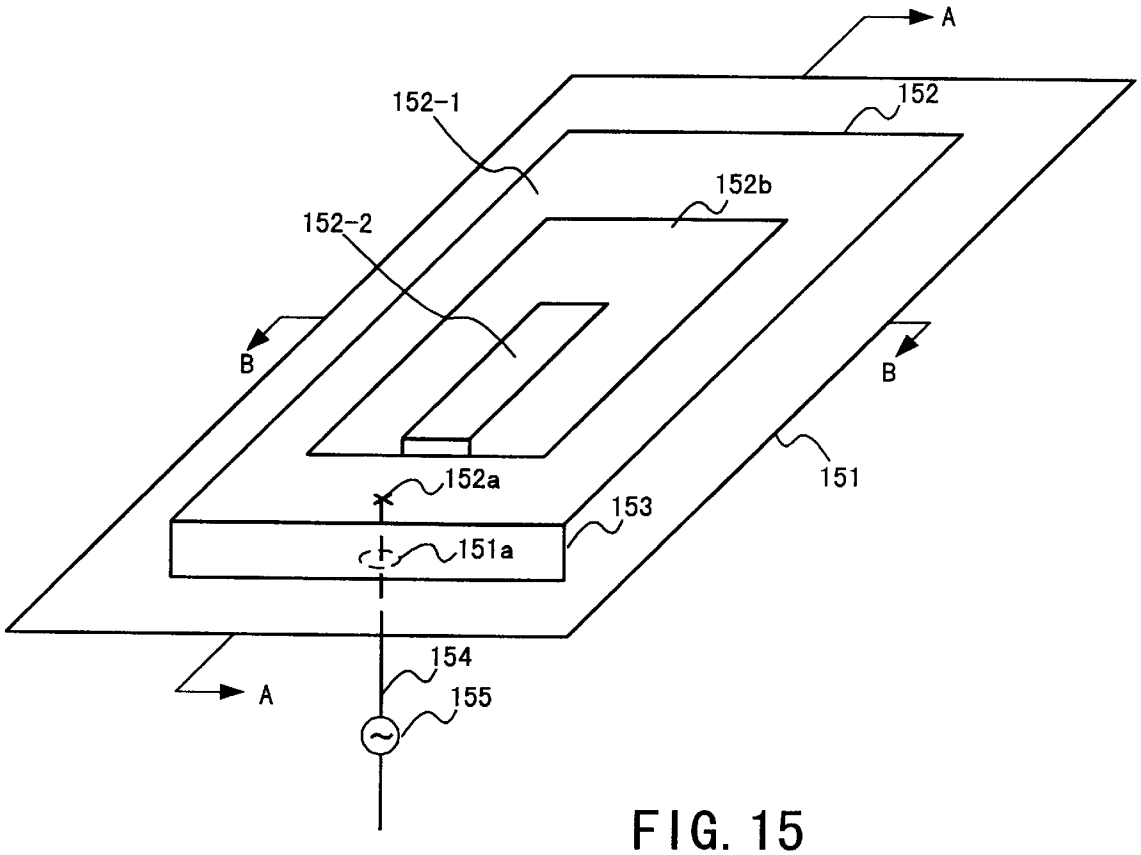

FIG. 15

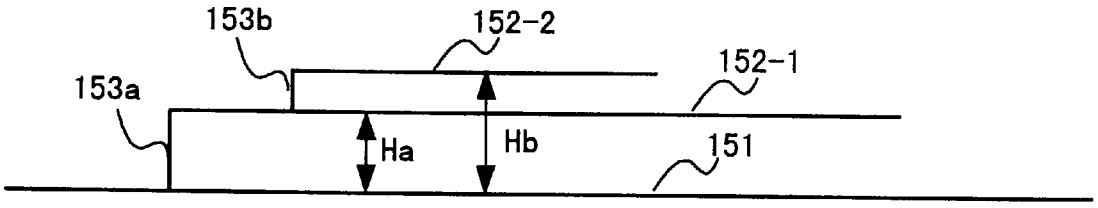

FIG. 16(a)

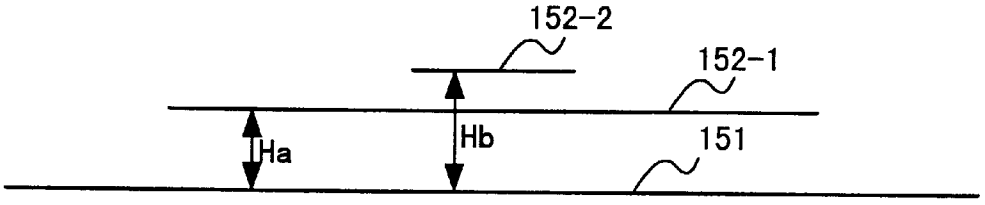

FIG. 16(b)

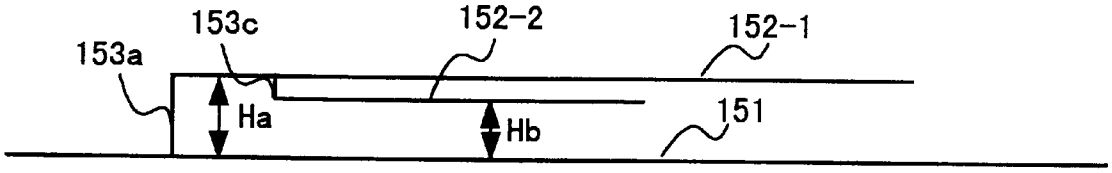

FIG. 17(a)

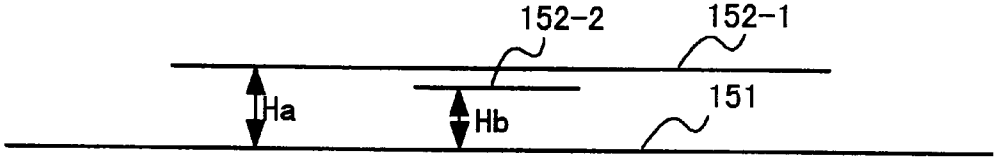

FIG. 17(b)

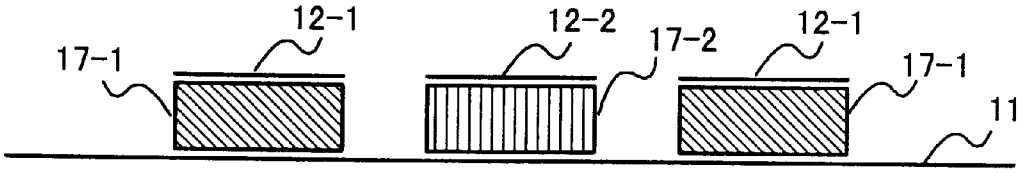

FIG. 18(a)

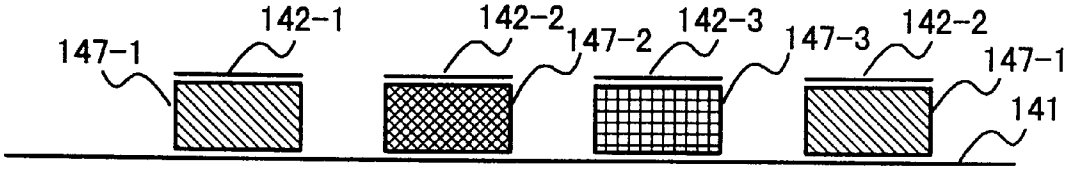

FIG. 18(b)

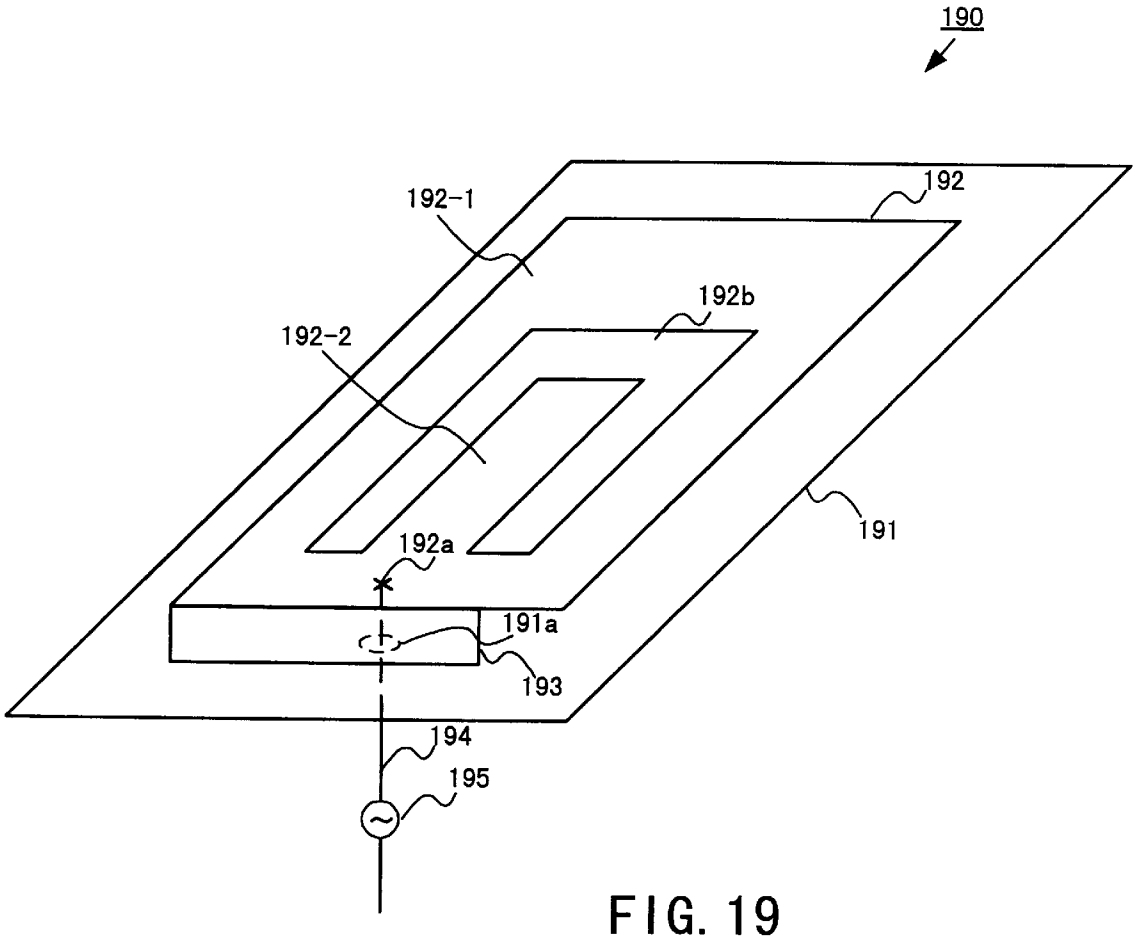

FIG. 19

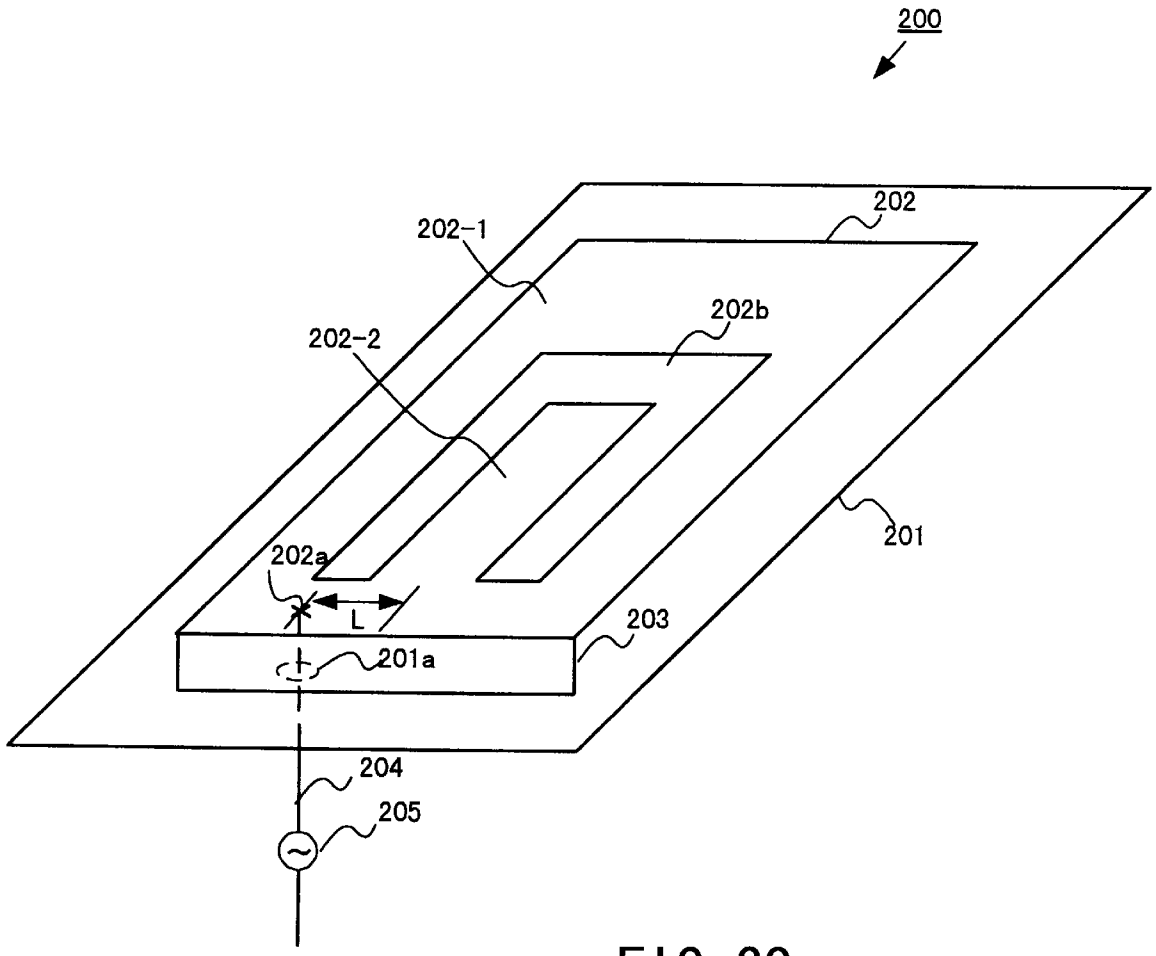

FIG. 20

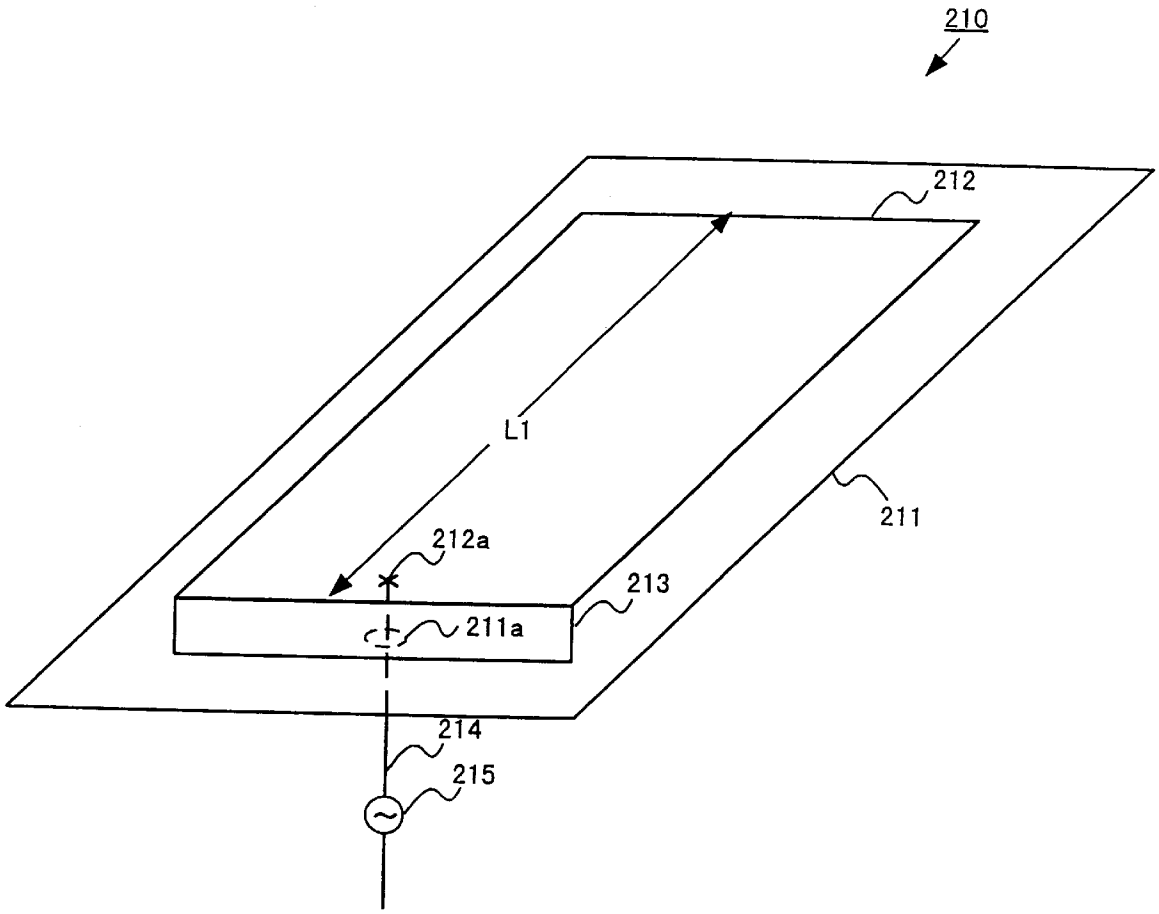

FIG. 21

Prior Art

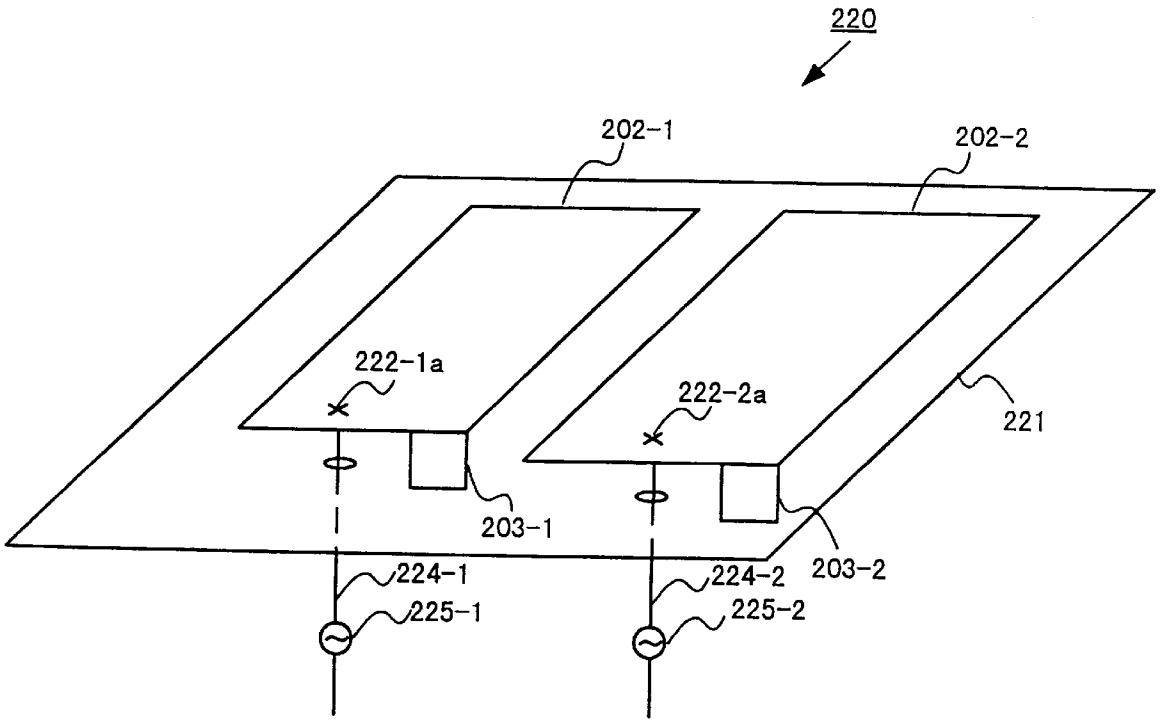

FIG. 22

Prior Art

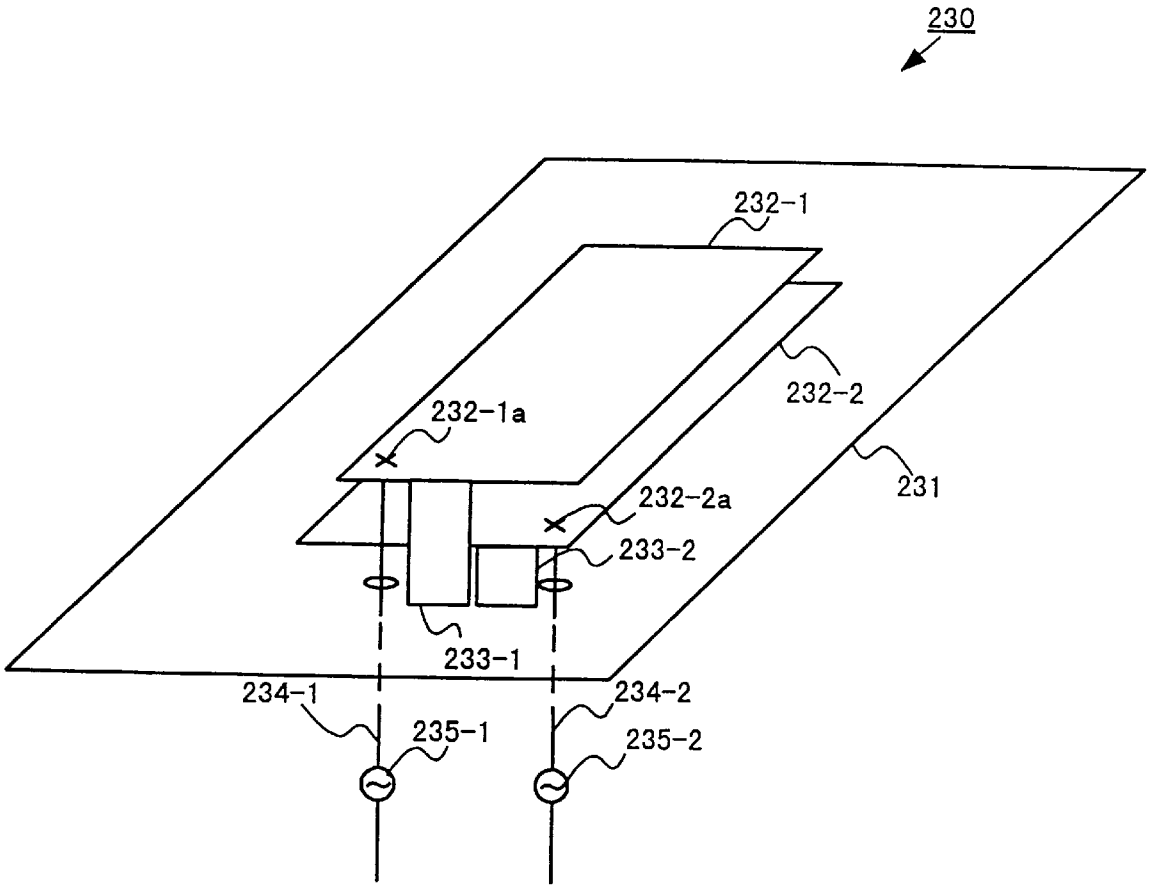

FIG. 23

Prior Art

MULTIFREQUENCY INVERTED F-TYPE ANTENNA

TECHNICAL FIELD

The present invention relates to a multifrequency inverted F-type antenna used as an internal antenna of small, thin radio communication terminals such as, chiefly, portable telephones, and more particularly, it relates to a multifrequency inverted F-type antenna capable of receiving radio waves in multiple frequency bands without increasing its size.

BACKGROUND ART

In general, inverted F-type antennas have excellent characteristics as internal antennas of small, thin radio terminals typified by portable telephones.

FIG. **21** is a perspective view showing the typical construction of a conventional inverted F-type antenna.

Referring to FIG. **21**, in the inverted F-type antenna **210**, an emission conductor **212** is arranged opposite a ground conductor **211**, the emission conductor **212** being connected to the ground conductor **2112** through a ground conductor **213**.

Also, a feeding point **212***a* is provided on emission conductor **212**, and power is supplied to the feeding point **212***a* by means of a coaxial feeding line **214** from power feeding source **215** through a hole **211** a provided in ground conductor **211**.

As is known, assuming that the length of emission conductor **212** is L1 as shown in FIG. **21**, the inverted F-type antenna **210** resonates with the frequency at which the length L1 is about $\lambda/4$ (where λ is the wavelength).

However, with radio terminals of this type, it is demanded that the inverted F-type antenna should be capable of receiving two or more different frequency bands together in order for example to be capable of being employed in two or more systems.

The constructions shown in FIG. **22** or FIG. **23** are known as conventional constructions whereby it is made possible to receive two or more different frequency bands together, using an inverted F-type antenna.

FIG. **22** is a perspective view showing a conventional multifrequency inverted F-type antenna that is capable of receiving two or more different frequency bands together.

Referring to FIG. **22**, in the multifrequency inverted F-type antenna **220**, two emission conductors **222-1** and **222-2** of different size are arranged in parallel with respect to ground conductor **221**; these two emission conductors **222-1** and **222-2** are connected to ground conductor **221** through respective ground conductors **223-1** and **223-2**; power is supplied to feeding point **222-1** a on emission conductor **222-1** from power feeding source **225-1** by coaxial feeding line **224-1** and power is supplied to feeding point **222-2***a* on emission conductor **222-2** from power feeding source **225-2** by coaxial feeding line **224-2**.

Specifically, in the multifrequency inverted F-type antenna **220** shown in FIG. **22**, an arrangement is adopted whereby two single-frequency inverted F-type antennas that resonate in respectively different frequency bands are arranged adjacently; as a result, there is the problem that the installation area becomes large in order to permit the arrangement of these two single-frequency inverted F-type antennas.

FIG. **23** is a perspective view showing another conventional multifrequency inverted F-type antenna which is capable of receiving two or more different frequency bands at once.

Referring to FIG. **23**, in the multifrequency inverted F-type antenna **230**, two emission conductors **232-1** and **232-2** of different size are arranged in stacked fashion relative to ground conductor **231**, these two emission conductors **232-1** and **232-2** being connected to ground conductor **231** through respective ground conductors **233-1**, **233-2**; feeding point **232-1** a on emission conductor **232-1** is supplied with power from power feeding source **235-1** by coaxial feeding line **234-1**, while feeding point **232-2***a* on emission conductor **232-2** is supplied with power from power feeding source **235-2** by means of coaxial feeding line **234-2**.

Specifically, with the construction shown in FIG. **23**, two single-frequency inverted F-type antennas that resonate in respectively different frequency bands are arranged in stacked fashion; as a result, there is the problem that the installation volume becomes large owing to the increased height of the installation region in order to provide for the stacked arrangement of these two single-frequency inverted F-type antennas.

Thus, there was the problem that, with a conventional multifrequency inverted F-type antenna arranged to be capable of receiving simultaneously two or more different frequency bands, there was the problem that the installation area or installation volume became larger than that of a conventional single-frequency inverted F-type antenna, thereby presenting an obstacle to reducing the size and thickness of a radio terminal accommodating such a multifrequency inverted F-type antenna.

DISCLOSURE OF THE INVENTION

Accordingly, an object of the present invention is to provide a multifrequency inverted F-type antenna whereby radio waves of multiple frequency bands can be received without increase in size.

In order to achieve this object, the invention according to claim **1** is a multifrequency inverted F-type antenna comprising: a ground conductor; a short-circuit plate planted in the ground conductor; a first emission conductor arranged facing the short-circuit plate, having a cut-out part in its interior, and whose one end is connected to the short-circuit plate; and a second emission conductor arranged facing the short-circuit plate and formed within the cutout part of the first emission conductor.

Also, in the invention according to claim **2**, in the invention of claim **1**, the first emission conductor comprises a feeding point connection part whereby connection of the feeding point is effected, between the cut-out part and the short-circuit plate.

Also, in the invention according to claim **3**, in the invention of claim **1**, the second emission conductor is formed integrally with the first emission conductor.

Also, in the invention according to claim **4**, in the invention of claim **1**, the second emission conductor has a single projection and operates in two frequency bands dependent on the shape of the first emission conductor and the shape of the second emission conductor.

Also, in the invention according to claim **5**, in the invention of claim **4**, the first spacing between the first emission conductor and the ground conductor and the second spacing between the second emission conductor and the ground conductor are set to respectively different distances.

Also, in the invention according to claim **6**, in the invention of claim **4**, dielectric elements are arranged between at least one of either the first emission conductor and the

ground conductor or the second emission conductor and the ground conductor, the first dielectric constant between the first emission conductor and the ground conductor and the second dielectric constant between the second emission conductor and the ground conductor being different.

Also, in the invention according to claim **7**, in the invention of claim **1**, the second emission conductor has a plurality of projections and operates in a plurality of frequency bands dependent on the shape of the first emission conductor and the shape of the second emission conductor.

Also, in the invention according to claim **8**, in the invention of claim **7**, the first spacing between the first emission conductor and the ground conductor and a plurality of second spacings between the projections of the second emission conductor and the ground conductor are set to respectively different distances.

Also, in the invention according to claim **9**, in the invention of claim **7**, a dielectric element is arranged in at least one of the spacings between the first emission conductor and the ground conductor and between the projections of the second emission conductor and the ground conductor, and the first dielectric constant between the first emission conductor and the ground conductor and the second dielectric constant between the projections of the second emission conductor and the ground conductor, respectively, are made to be different.

Also, in the invention according to claim **10**, in the invention of claim **2**, the feeding point is arranged in the middle of the feeding point connection part in the width direction of the first emission conductor.

Also, in the invention according to claim **11**, in the invention of claim **2**, the feeding point is arranged at a position of the feeding point connection part offset by a prescribed distance from the middle in the width direction of the first emission conductor.

Also, in the invention according to claim **12**, in the invention of claim **1**, the short-circuit plate is formed of the same length as the length in the width direction of the first emission conductor.

Also, in the invention according to claim **13**, in the invention of claim **1**, the short-circuit plate is formed of shorter length than the length in the width direction of the first emission conductor and with its center offset from the center in the width direction of the first emission conductor.

BRIEF DESCRIPTION OF THE DRAWINGS

FIG. **1** is a perspective view showing a first embodiment of a multifrequency inverted F-type antenna according to the present invention;

FIG. **2** is a diagram showing the frequency characteristic of the multifrequency inverted F-type antenna **10** shown in FIG. **1**;

FIG. **3** is a perspective view showing a multifrequency inverted F-type antenna **30** constituted by applying specific dimensions of the multifrequency inverted F-type antenna **10** shown in FIG. **1**;

FIG. **4** is a view showing a coordinate system for analyzing the radiation pattern of the multifrequency inverted F-type antenna **300** shown in FIG. **3**;

FIG. **5** is a diagram showing the reflection characteristic at the antenna feeding point when analyzed using electromagnetic field analysis (method of moments) on the characteristic of the multifrequency inverted F-type antenna **300** shown in FIG. **3**;

FIG. **6** is a radiation pattern diagram showing the results of analysis of the radiation pattern (X-Y plane in FIG. **4**) in the 800 MHz band of the multifrequency inverted F-type antenna **300** shown in FIG. **3**;

FIG. **7** is a radiation pattern diagram showing the results of analysis of the radiation pattern (X-Z plane of FIG. **4**) in the 800 MHz band of the multifrequency inverted F-type antenna **300** shown in FIG. **3**;

FIG. **8** is a radiation pattern diagram showing the results of analysis of the radiation pattern (Y-Z plane in FIG. **4**) in the 800 MHz band of the multifrequency inverted F-type antenna **300** shown in FIG. **3**;

FIG. **9** is a radiation pattern diagram showing the results of analysis of the radiation pattern (X-Y plane in FIG. **4**) in the 1.9 GHz band of the multifrequency inverted F-type antenna **300** shown in FIG. **3**;

FIG. **10** is a radiation pattern diagram showing the results of analysis of the radiation pattern (X-Z plane in FIG. **4**) in the 1.9 GHz band of the multifrequency inverted F-type antenna **300** shown in FIG. **3**;

FIG. **11** is a radiation pattern diagram showing the results of analysis of the radiation pattern (Y-Z plane in FIG. **4**) in the 1.9 GHz band of the multifrequency inverted F-type antenna **300** shown in FIG. **3**;

FIG. **12** is a perspective view showing a second embodiment of the multifrequency inverted F-type antenna according to the present invention;

FIG. **13** is a perspective view showing a third embodiment of a multifrequency inverted F-type antenna according to the present invention;

FIG. **14** is a perspective view showing a fourth embodiment of a multifrequency inverted F-type antenna according to the present invention;

FIG. **15** is a perspective view showing a fifth embodiment of a multifrequency inverted F-type antenna according to the present invention;

FIGS. **16**(*a*) and **16**(*b*) are cross-sectional views along the line A—A (FIG. **16**(*a*)) and a perspective view along the line B—B (FIG. **16**(*b*)) of the multifrequency inverted F-type antenna shown in FIG. **15**;

FIGS. **17**(*a*) and **17**(*b*) show cross-sectional views along the line A—A (FIG. **17**(*a*)) and a cross-sectional view along the line B—B (FIG. **18**(*b*)) corresponding to FIGS. **16**(*a*) and **16**(*b*), constituted such as to enable adjustment of the distance Hb between the second emission conductor **152-2** and ground conductor **151**, by the provision of a downwardly directed part **153***c* in place of the upwardly directed part **153***a* of second emission conductor **152-2** in the construction shown in FIG. **15**;

FIGS. **18**(*a*) and **18**(*b*) are cross-sectional views showing a sixth embodiment of a multifrequency inverted F-type antenna constituted by inserting a dielectric element between the ground conductor and first emission conductor and second emission conductor;

FIG. **19** is a perspective view showing a seventh embodiment of a multifrequency inverted F-type antenna according to the present invention;

FIG. **20** is a perspective view showing an eighth embodiment of a multifrequency inverted F-type antenna according to the present invention;

FIG. **21** is a perspective view showing the typical construction of a conventional inverted F-type antenna;

FIG. **22** is a perspective view showing a conventional multifrequency inverted F-type antenna arranged to be capable of receiving simultaneously two or more different frequency bands; and

FIG. **23** is a perspective view showing another conventional multifrequency F-type antenna constructed so as to be capable of receiving simultaneously two or more different frequency bands.

BEST MODE FOR CARRYING OUT THE INVENTION

Embodiments of a multifrequency inverted F-type antenna according to the present invention are described below with reference to the appended drawings.

FIG. **1** is a perspective view showing a first embodiment of a multifrequency inverted F-type antenna according to the present invention.

Referring to FIG. **1**, in the multifrequency inverted F-type antenna **10**, there are formed a first emission conductor **12-1** and second emission conductor **12-2** that resonate in respectively different frequency bands on an emission conductor **12** by forming a cut-out part **12***b* in the emission conductor **12**, which is provided with a feeding point **12***a* and whose one end is connected to a short-circuit plate **13** planted in ground conductor **11**. With this construction, it is capable of receiving radio waves of two different frequency bands: a first frequency band determined by the shape of first emission conductor **12-1** and a second frequency band determined by the shape of second emission conductor **12-2**.

Specifically, a first emission conductor **12-1** of resonance length LA in FIG. **1** and a second emission conductor **12-2** of resonance length LB in FIG. **1** are formed on emission conductor **12**. One end of the emission conductor **12** is connected to ground conductor **11** through short-circuit plate **13** and power is supplied to a single feeding point **12***a* of the emission conductor **12** by a coaxial feeding line **14** from power feeding source **15** through a hole **11** a provided in ground conductor **11**.

With this construction, the multifrequency inverted F-type antenna **10** resonates in a first frequency band wherein length LA is about $\lambda/4$ (λ is the wavelength) by means of first emission conductor **12-1**, and resonates in a second frequency band wherein length LB is about $\lambda/4$ (λ is the wavelength) by means of second emission conductor **12-2**. As a result, the multifrequency inverted F-type antenna **10** becomes capable of receiving radio waves of two frequency bands, namely, the first frequency band and second frequency band, without increase of installation area or installation volume.

Specifically, as regards installation area, the multifrequency inverted F-type antenna **10** shown in FIG. **1** has the same installation area as a conventional single-frequency inverted F-type antenna that resonates in the first frequency band wherein length LA is about $\lambda/4$ (where λ is the wavelength). As regards installation height (installation volume), it has the same installation height (installation volume) as a conventional single-frequency inverted F-type antenna that resonates in the first frequency band wherein length LA is about $\lambda/4$ (where λ is the wavelength). A multifrequency inverted F-type antenna which is smaller in size and thinner than the conventional multi-frequency antennas shown in FIG. **22** and FIG. **23** can thereby be realized. That is, the multifrequency inverted F-type antenna **10** shown in FIG. **2** does not need to have its installation area and installation volume increased in order to resonate in the second frequency band wherein length LB is about $\lambda/4$ (where λ is the wavelength).

FIG. **2** is a diagram showing a frequency characteristic of the multifrequency inverted antenna **10** shown in FIG. **1**.

In FIG. **2**, the vertical axis shows the reflection coefficient (dB) at feeding point **12***a* of the multifrequency inverted F-type antenna **10**, while the horizontal axis shows frequency (Hz).

As is clear from FIG. **2**, the multifrequency inverted F-type antenna **10** has two sharp resonant points at frequency A and frequency B; frequency A is determined by the shape of first emission conductor **12-1** of resonance length LA, while frequency B is determined by the shape of second emission conductor **12-1** of resonance length LB.

Specifically, the multifrequency inverted F-type antenna **10** shown in FIG. **1** is capable of receiving radio waves in two frequency bands, namely, a first frequency band determined by the shape of first emission conductor **12-1** and a second frequency band determined by the shape of second emission conductor **12-2**.

FIG. **3** is a perspective view showing a multifrequency inverted F-type antenna **30** constituted by supplying specific dimensions of the multifrequency inverted F-type antenna **10** shown in FIG. **1**.

Referring to FIG. **3**, in the multifrequency inverted F-type antenna **30**, emission conductor **32** is constituted of a size: 80 mm×40 mm and one 40 mm side of the emission conductor **32** is connected to a ground conductor **31** through a short-circuit plate **33** of size 40 mm×4 mm. In emission conductor **32**, there is formed a practically U-shaped cut-out part **32***b* of external width 25 mm, internal width 20 mm, and height 60 mm, leaving a feeding point connection part of width 10 mm for forming feeding point **32***a*.

In this way, on emission conductor **32**, there are formed a first emission conductor **32-1** of approximately U-shape of external width 40 mm, internal width 25 mm and height 70 mm connected to a feeding point connection part of width 10 mm, and a second emission conductor **32-2** having a rectangular shape of 20 mm×30 mm and connected to the feeding point connection part of width 10 mm.

Thus, the first emission conductor **32-1** having an approximately U shape of external width 40 mm, internal width 25 mm and height 70 mm that is connected to the feeding point connection part of width 10 mm constitutes a first inverted F-type antenna that resonates in the first frequency band, while the second emission conductor **32-2** having a rectangular shape of 20 mm×30 mm connected to the feeding point connection part of width 10 mm constitutes a second inverted F-type antenna that resonates in the second frequency band.

The feeding point connection part of width 10 mm has the function of matching the first inverted F-type antenna and second inverted F-type antenna.

Power is supplied to a single feeding point **32***a* of emission conductor **32** by means of coaxial feeding line **34** from power feeding source **35**, through a hole **31***a* provided in ground conductor **31**.

The multifrequency inverted F-type antenna **30** shown in FIG. **3** may be assumed to be the internal antenna of a portable telephone constituting a dual-mode terminal capable of sending and receiving under the two systems: GSM (Global System for Mobile Communication) and PHS (Personal Handyphone System); by means of the first inverted F-type antenna and second inverted F-type antenna described above, a multifrequency inverted F-type antenna is realized that is capable of sending and receiving in the GSM radio frequency 800 MHz band and PHS radio frequency 109 GHz band.

Next, the results of analysis of the radiation pattern of the multifrequency inverted F-type antenna **300** illustrated in FIG. **3** will be described.

FIG. **4** is a diagram illustrating a coordinate system for the purposes of analysis of the radiation pattern of the multifrequency inverted F-type antenna **300** illustrated in FIG. **3**.

Referring to FIG. **4**, in the coordinate system for analysis of the radiation pattern of the multifrequency inverted F-type antenna **300** illustrated in FIG. **3**, the direction orthogonal to the surface of the emission conductor **302** is defined as the Z axis, the longest axis direction of emission conductor **302** is defined as the X axis, and the shortest axis direction is defined as the Y axis.

FIG. **5** is a diagram showing the reflection characteristic at the antenna feeding point when the characteristic of the multifrequency inverted F-type antenna **300** shown in FIG. **3** is analyzed using electromagnetic field analysis (method of moments).

In FIG. **5**, the vertical axis shows the reflection characteristic i.e. the S parameter (**S11**) at the antenna feeding point and the horizontal axis shows the frequency (GHz).

As is clear from FIG. **5**, the multifrequency inverted F-ype antenna **300** illustrated in FIG. **3** realizes a multifrequency inverted F-type antenna that is capable of receiving both the GSM radio frequency 800 MHz band and PHS radio frequency 109 GHz band.

FIG. **6** is a radiation pattern diagram illustrating the results of analysis of the radiation pattern (in the X-Y plane of FIG. **4**) in the 800 MHz band of the multifrequency inverted F-type antenna **300** illustrated in FIG. **3**.

FIG. **7** is a radiation pattern diagram illustrating the results of analysis of the radiation pattern (X-Z plane in FIG. **4**) in the 800 MHz band of the multifrequency inverted F-type antenna **300** illustrated in FIG. **3**.

FIG. **8** is a radiation pattern diagram illustrating the results of analysis of the radiation pattern (Y-Z plane in FIG. **4**) in the 800 MHz band of the multifrequency inverted F-type antenna **300** illustrated in FIG. **3**.

As is clear from FIG. **6** to FIG. **8**, although the multifrequency inverted F-type antenna **300** illustrated in FIG. **3** shows some deterioration in the 800 MHz band as regards the X-Z plane radiation pattern and Y-Z plane radiation pattern, it has practically the same directionality as a one-sided short-circuit patch and has the same performance as an 800 MHz band single-frequency inverted F-type antenna.

FIG. **9** is a radiation pattern diagram showing the results of analysis of the radiation pattern (X-Y plane of FIG. **4**) in the 1.9 GHz band of the multifrequency inverted F-type antenna **300** shown in FIG. **3**.

FIG. **10** is a radiation pattern diagram showing the results of analysis of the radiation pattern (X-Z plane in FIG. **4**) in the 1.9 GHz band of the multifrequency inverted F-type antenna **300** shown in FIG. **3**.

FIG. **11** is a radiation pattern diagram showing the results of analysis of the radiation pattern (Y-Z plane in FIG. **4**) in the 1.9 GHz band of the multifrequency inverted F-type antenna **300** shown in FIG. **3**.

As is clear from FIG. **9** and FIG. **11**, the multifrequency inverted F-type antenna **300** shown in FIG. **3** shows some deterioration in the X-Z plane radiation pattern and Y-Z plane radiation pattern in the 1.9 GHz band, but it has practically the same directionality as a one-sided short-circuit patch and has the same performance as a 1.9 GHz band single-frequency inverted F-type antenna.

In this way, with the multifrequency inverted F-type antenna **300** shown in FIG. **3**, a small and thin multifrequency inverted F-type antenna can be realized, which can provide a multifrequency inverted F-type antenna that is capable of being adopted as the internal antenna of dual-mode terminals of various types.

FIG. **12** is a perspective view showing a second embodiment of a multifrequency inverted F-type antenna according to the present invention.

Referring to FIG. **12**, in the multifrequency inverted F-type antenna **120**, by forming a cut-out part **122*b*** in emission conductor **122** provided with a feeding point **122*a***, whose one end is connected to short-circuit plate **123** planted in ground conductor **121**, there are formed a first emission conductor **122-1** on the emission conductor **122**, and an inverted L-shaped second emission conductor **122-2**; by this means, this antenna is capable of receiving radio waves of two different frequency bands, namely, a first frequency band determined by the shape of the first emission conductor **122-1**, and a second frequency band determined by the shape of the second emission conductor **122-2**. Power is supplied through hole **121** a provided in ground conductor **121**, by means of coaxial feeding line **124** from power feeding source **125**, to the single feeding point **122*a*** of emission conductor **122**.

Thus, in the multifrequency inverted F-type antenna **120** shown in FIG. **12**, the shape of the second emission conductor **122-2**, compared with the multifrequency inverted F-type antenna **10** shown in FIG. **1**, is different from the second emission conductor **12-2** of the multifrequency inverted F-type antenna **10** shown in FIG. **1**.

Specifically, while the second emission conductor **12-2** of the multifrequency inverted F-type antenna **10** shown in FIG. **1** is formed in rectangular shape, the second emission conductor **122-2** of the multifrequency inverted F-type antenna **120** of the second embodiment shown in FIG. **12** is formed in inverted L shape. As a result, the shape of the cut-out part **122*b*** in the multifrequency inverted F-type antenna **120** of the second embodiment shown in FIG. **12** is different from the shape of the cut-out part **12*b*** of the multifrequency inverted F-type antenna **10** shown in FIG. **1**.

With the above construction, thanks to the first emission conductor **122-1**, the multifrequency inverted F-type antenna **120** resonates in the first frequency band in which length LA is approximately $\lambda/4$ (λ is the wavelength) and resonates in the second frequency band in which the length LB is about $\lambda/4$ (λ is the wavelength) thanks to the second emission conductor **122-2**. Thus, with the multifrequency inverted F-type antenna **120** of the second embodiment also, it is possible to receive radio waves of the two frequency bands, namely, the first frequency band and second frequency band, without increase in the installation area or installation volume.

FIG. **13** is a perspective view showing a third embodiment of a multifrequency inverted F-type antenna according to the present invention.

Referring to FIG. **13**, in the multifrequency inverted F-type antenna **130**, there is formed a cut-out part **132*b*** in emission conductor **132** provided with a feeding point **132*a*** and having one end thereof connected to a short-circuit plate **133** planted in ground conductor **131**; a first emission conductor **132-1** and a second emission conductor **132-2** including a circular shape are thereby formed on the emission conductor **132**. Thus the antenna is constituted so as to be capable of receiving radio waves of two different frequency bands, namely, a first frequency band determined by the shape of first emission conductor **132-1** and a second frequency band determined by the shape of second emission conductor **132-2**. Power is supplied to the single feeding point **132*a*** of emission conductor **132** by means of coaxial feeding line **134** from power feeding source **135**, through a hole **131*a*** provided in ground conductor **131**.

With the multifrequency inverted F-type antenna **130** of the third embodiment also, radio waves of two frequency bands, namely, a first frequency band and a second fre-

quency band, can be received without needing to increase either the installation area or installation volume.

It should be noted that the shapes of the second emission conductors **12-2**, **32-2**, **122-2**, **132-2** formed on the emission conductors **12**, **122**, **132** in the first to third embodiments described above are not restricted to the rectangular shape as in the first embodiment shown in FIG. **1** or the inverted L shape as in the second embodiment shown in FIG. **12** or the shape including a curved circular shape as in the third embodiment shown in FIG. **13**, but could be of any desired shape.

The shapes of the first emission conductors **12-1**, **122-1**, **132-1** formed on emission conductors **12**, **122**, **132** are not restricted to the shapes indicated in the first to third embodiments and any desired shape including for example a curve could be adopted.

Although, in the second to third embodiments, construction was effected by forming the first emission conductors **12-1**, **122-1**, **132-1** and second emission conductors **12-2**, **122-2**, **132-2** by providing cut-out parts **12***b*, **122***b*, **132***b* on emission conductors **12**, **122**, and **132**, it would also be possible to form these by forming cut-out parts of rectangular shape or the like on emission conductors **12**, **122**, **132** and then subsequently connecting second emission conductors **12-2**, **122-2**, **132-2** in these cut-out parts.

Further, although, in the first to third embodiments, the first emission conductors **12-1**, **122-1**, **132-1** and second emission conductors **12-2**, **122-2** and **132-2** were respectively arranged parallel to ground conductors **11**, **121** and **131**, there is no restriction to this, and first emission conductors **12-1**, **122-1**, **132-1** and second emission conductors **12-2**, **122-2**, and **132-2** need not be parallel with ground conductors **11**, **121**, **131**.

Regarding the method of power supply, this is not restricted to the use of a coaxial lead and could be achieved using for example a strip lead or electromagnetic coupling etc.

FIG. **14** is a perspective view showing a fourth embodiment of a multifrequency inverted F-type antenna according to the present invention.

Referring to FIG. **14**, in the multifrequency inverted F-type antenna **140**, a first emission conductor **142-1** and second emission conductor **142-2** and second emission conductor **142-3** are formed on the emission conductor **142** by the formation of a cut-out part **142***b* on emission conductor **142** which is provided with a feeding point **142***a* and whose one end is connected with a short-circuit plate **143** planted in ground conductor **141**. By this means, it is constituted such as to be capable of receiving radio waves of three different frequency bands, namely, a first frequency band determined by the shape of the first emission conductor **142-1**, a second frequency band determined by the shape of the second emission conductor **142-2**, and a third frequency band determined by the shape of the third emission conductor **142-3**. Power is supplied to the single feeding point **142***a* of emission conductor **142** by coaxial feeding line **144** from power feeding source **145**, through hole **141** a provided in ground conductor **141**.

With the above construction, the multifrequency inverted F-type antenna **140** resonates in a first frequency band in which length LA is about $\lambda/4$ (λ is the wavelength) using first emission conductor **142-1**, resonates in the second frequency band in which length LB is about $\lambda/4$ (λ is the wavelength) thanks to second emission conductor **142-2**, and resonates in the third frequency band in which length LC is about $\lambda/4$ (λ is the wavelength) thanks to the third emission conductor **142-3**.

Thus, multifrequency inverted F-type antenna **120** according to the second embodiment is capable of receiving radio waves in the three frequency bands, namely, first frequency band, second frequency band and third frequency band, without increasing either the installation area or installation volume.

The shapes of the second emission conductor and third emission conductor **142-2** and **142-3** formed on emission conductor **142** are not restricted to the rectangular shapes shown in FIG. **14** and any desired shape could be adopted.

The shape of the first emission conductor **142-1** formed on the emission conductor **142** is not restricted to the shape shown in FIG. **14** but could be of any desired shape.

Although, in the fourth embodiment, the first to third emission conductors **142-1**, **142-2**, **142-3** were formed by providing cut-out part **142***b* on emission conductor **142**, it would be possible to form these by forming a rectangular or the like cut-out part on emission conductor **142** and then subsequently connecting second emission conductor **142-2** and third emission conductor **142-3** within this cut-out part.

Further, although in the fourth embodiment described above first to third emission conductors **142-1**, **142-2**, **142-3** were formed parallel with ground conductor **141**, just as in the case of the first to third embodiments, the first to third emission conductors **142-1**, **142-2**, **142-3** need not be parallel to ground conductor **141**.

Further, although, in the fourth embodiment shown in FIG. **14**, the arrangement was such that radio waves of three frequency bands, namely, a first frequency band, a second frequency band and a third frequency band, could be received by forming three emission conductors, namely, first to third emission conductors **142-1**, **142-2**, **142-3**, on emission conductor **142**, it would be possible to arrange to receive radio waves of multiple frequency bands of four or more, such as a fourth frequency and a fifth frequency, by forming four or more emission conductors on emission conductor **142**.

In this case also, a multifrequency inverted F-type antenna can be implemented that is capable of receiving radio waves of four or more multiple frequency bands without increasing either the installation area or installation volume.

FIG. **15** is a perspective view showing a fifth embodiment of a multifrequency inverted F-type antenna according to the present invention.

FIGS. **16**(*a*) and **16**(*b*) are cross-sectional views along the line A—A (FIG. **16**(*a*)) and a cross-sectional view along the line B—B (FIG. **16**(*b*)) of the multifrequency inverted F-type antenna shown in FIG. **15**.

Referring to FIG. **15** and FIGS. **16**(*a*) and **16**(*b*), the multifrequency inverted F-type antenna **150** is formed with a first emission conductor **152-1** and second emission conductor **152-2** on an emission conductor **152** by forming a cut-out part **152***b* on the emission conductor **152** which is provided with a feeding point **152***a* and one end of which is connected to a short-circuit plate **153** planted in a ground conductor **151**; furthermore, the distance Hb of second emission conductor **152-1** and ground conductor **151** is arranged to be capable of being adjusted by the provision of an upright part **153***b* on second emission conductor **152-2**.

With the above arrangement, in the multifrequency inverted F-type antenna **150**, it is possible to vary the bandwidth of the second frequency band determined by the shape of the second emission conductor **152-2**, by adjusting the distance Hb of second emission conductor **152-2** and

ground conductor **151** by varying the height of upright part **153***b* provided on second emission conductor **152-2**.

Specifically, the distance Hb of the second emission conductor **152-2** and the ground conductor **151** is related to the bandwidth of the second frequency band, which is determined by the shape of second emission conductor **152-2**. Consequently, for example by increasing the distance Hb of the second emission conductor **152-2** and ground conductor **151**, the bandwidth of the second frequency band that is determined by the shape of second emission conductor **152-2** can be made wider and, by lowering the distance Hb of the second emission conductor **152-2** and ground conductor **151**, the bandwidth of the second frequency band determined by the shape of the second emission conductor **152-2** can be made narrower.

Likewise, if the distance Ha of the first emission conductor **152-1** and ground conductor **151** is increased by adjusting the height of short-circuit plate **153***a,* the bandwidth of the first frequency band determined by the shape of the first emission conductor **152-1** can be made wider and, by lowering the distance Ha of the first emission conductor **152-1** and ground conductor **151**, the bandwidth of the first frequency band determined by the shape of the first emission conductor **152-1** can be made narrower.

It should be noted that, although in the fifth embodiment illustrated in FIG. **15** and FIGS. **16**(*a*) and **16**(*b*) the distance Hb between the second emission conductor **152-2** and ground conductor **151** was arranged to be capable of being adjusted by the provision of upright part **153***b* on second emission conductor **152-2**, it would also be possible to adjust the distance Hb of the second emission conductor **152-2** and ground conductor **151** by providing a downwardly directed part on the second emission conductor **152-2**.

FIGS. **17**(*a*) and **17**(*b*) are cross-sectional views along the line A—A (FIG. **17**(*a*)) and a cross-sectional view along the line B—B (FIG. **17**(*b*)) corresponding to FIGS. **16**(*a*) and **16**(*b*), constituted such that it is possible to adjust the distance Hb between the second emission conductor **152-2** and ground conductor **151** by the provision of a downwardly directed part **153***c* instead of the upright part **153***a* of second emission conductor **152-2** in the construction illustrated in FIG. **15**.

With the embodiment shown in FIGS. **17**(*a*) and **17**(*b*) also, by increasing the distance Hb of the second emission conductor **152-2** and ground conductor **151**, the bandwidth of the second frequency band determined by the shape of the second emission conductor **152-2** can be made wider, and, by lowering the distance Hb between the second emission conductor **152-2** and the ground conductor **151**, the bandwidth of the second frequency band that is determined by the shape of the second emission conductor **152-2** can be made narrower.

Likewise, if the distance Ha of the first emission conductor **152-1** and ground conductor **151** is increased by adjusting the height of short-circuit plate **153***a,* the bandwidth of the first frequency band determined by the shape of the first emission conductor **152-1** can be made wider, and, by lowering the distance Ha of the first emission conductor **152-1** and ground conductor **151**, the bandwidth of the first frequency band determined by the shape of the first emission conductor **152-1** can be made narrower.

It should be noted that with for example a multifrequency inverted F-type antenna **30** according to the first embodiment shown in FIG. **3**, as shown in FIG. **5**, the bandwidth of the second frequency band that is determined by the shape of the second emission conductor **12-2** is wider than the bandwidth of the first frequency band that is determined by the shape of the first emission conductor **12-1**, but, if the construction of FIGS. **17**(*a*) and **17**(*b*) is adopted, it is possible to set the bandwidth of the second frequency band and the bandwidth of the first frequency band to be practically the same.

Although, with the construction illustrated in FIG. **15** and FIGS. **16**(*a*) and **16**(*b*), the volume of the multifrequency inverted F-type antenna **150** is increased by an amount corresponding to the height of upright part **153***b* provided on second emission conductor **152-2**, with the construction illustrated in FIGS. **17**(*a*) and **17**(*b*), this increase in volume does not occur.

It should be noted that, in the above first to fifth embodiments, the resonant frequencies and their bandwidths can be made variable by inserting respective dielectric elements between ground conductors **11**, **121**, **131**, **141**, **151** and first emission conductors **12-1**, **122-1**, **131-1**, **141-1**, **151-1** and second emission conductors **12-2**, **122-2**, **131-2**, **141-2**, **151-2**.

That is, if the dielectric constant of the dielectric element inserted between ground conductors **11**, **121**, **131**, **141**, **151** and first emission conductor **12-1**, **122-1**, **131-1**, **141-1**, **151-1** and the second emission conductors **12-2**, **122-2**, **131-2**, **141-2**, and **151-2** is increased, the resonance frequency can be lowered and the bandwidth narrowed; contrariwise, if the dielectric constant of the dielectric elements respectively inserted between ground conductors **11**, **121**, **131**, **141**, **151** and first emission conductors **12-1**, **122-1**, **131-1**, **141-1**, **151-1** and second emission conductors **12-2**, **122-2**, **131-2**, **141-2**, and **151-2** is lowered, the resonance frequency can be raised and the bandwidth made wider.

FIGS. **18**(*a*) and **18**(*b*) are cross-sectional views illustrating a sixth embodiment of a multifrequency inverted F-type antenna constituted by inserting dielectric elements between the ground conductor and first emission conductor and second emission conductor.

Of FIGS. **18**(*a*) and **18**(*b*), **18**(*a*) illustrates a multifrequency inverted F-type antenna constituted by inserting dielectric elements of respectively different dielectric constants between the ground conductor **11** and first emission conductor **12-1** and second emission conductor **12-2** in the multifrequency inverted F-type antenna **10** of the first embodiment illustrated in FIG. **1**.

In FIG. **18**(*a*), a first dielectric element **17-1** having a first dielectric constant is inserted between a ground conductor **11** and first emission conductor **12-1**, and a second dielectric element **17-2** having a second dielectric constant is inserted between ground conductor **11** and second emission conductor **12-2**.

With such a construction, the resonance frequency and bandwidth of the multifrequency inverted F-type antenna can be respectively varied by suitably selecting the first dielectric constant of the first dielectric element **17-1** inserted between ground conductor **11** and first emission conductor **12-1** and the second dielectric constant of the second dielectric element **17-2** inserted between the ground conductor **11** and second emission conductor **12-2**.

For example, it is possible to set the bandwidth of the first frequency band and the bandwidth of the second frequency band to be practically equal by making the first dielectric constant of the first dielectric element **17-1** lower than the second dielectric constant of the second dielectric element.

FIG. **18**(*b*) illustrates a multifrequency inverted F-type antenna constituted by inserting dielectric elements of

respectively different dielectric constants between ground conductor **141** and first emission conductor **142-1**, second emission conductor **142-2**, and third emission conductor **142-3** in the multifrequency inverted F-type antenna according to the fourth embodiment illustrated in FIG. **14**.

In FIG. **18**(*b*), a first dielectric element **147-1** having a first dielectric constant is inserted between ground conductor **141** and first emission conductor **142-1**; a second dielectric element **147-2** having a second dielectric constant is inserted between ground conductor **141** and second emission conductor **142-2**; and a third dielectric element **147-3** having a third dielectric constant is inserted between ground conductor **141** and third emission conductor **142-3**.

With this arrangement, by suitably respectively selecting the first dielectric constant of the first dielectric element **147-1** inserted between ground conductor **141** and first emission conductor **142-1**, the second dielectric constant of the second dielectric element **147-2** inserted between the ground conductor **141** and second emission conductor **142-2**, and the third dielectric constant of the third dielectric element **147-3** inserted between the ground conductor **141** and third emission conductor **142-3**, the resonance frequencies and their bandwidths of the multifrequency inverted F-type antenna can be respectively varied.

It should be noted that, in the multifrequency inverted F-type antenna of the sixth embodiment illustrated in FIGS. **18**(*a*) and **18**(*b*), it is possible to employ dielectric elements of the same dielectric constant as dielectric elements **17-1**, **17-2**,**147-1**, **147-2**,**147-3**, or it is also possible to make the dielectric constant that of air with the exception of at least one of these.

With the multifrequency inverted F-type antenna of the sixth embodiment illustrated in FIGS. **18**(*a*) and **18**(*b*), by insertion of the dielectric elements **17-1**,**17-2**, **147-1**, **147-2**, **147-3**, the thickness of the multifrequency inverted F-type antenna (i.e. the volume) can be further reduced, and the resonance frequencies and their bandwidths can be individually adjusted.

Although, in the first to sixth embodiments described above, short-circuit plates **13**, **123**, **133**, **143**, and **153***a* were arranged so as to be connected across the entire width of emission conductors **12**, **122**, **132**, **142** and **152**, it would be possible to make the length of short-circuit plates **13**, **123**, **133**, **143**, **153***a* shorter than the length of emission conductors **12**, **122**, **132**, **142**, **152** or to adopt a construction in which the centers of short-circuit plates **13**, **123**, **133**, **143**, **153***a* are offset from the centers of emission conductors **12**, **122**, **132**, **142**, **152**.

FIG. **19** shows a perspective view of a seventh embodiment of a multifrequency inverted F-type antenna according to the present invention.

In FIG. **19**, in the multifrequency inverted F-type antenna **190**, a short-circuit plate **193** constituted to be shorter than emission conductor **192** is planted by cutting away part thereof on ground conductor **191**. Emission conductor **192** provided with a feeding point **192***a* is connected to the short-circuit plate **193**. A cut-out part **192***b* is formed in the emission conductor **192**, thereby forming a first emission conductor **192-1** and second emission conductor **192-2** on the emission conductor **192**. It is thereby made possible to receive radio waves of two different frequency bands, mainly, a first frequency band determined by the shape of the first emission conductor **1921**, and a second frequency band determined by the shape of the second emission conductor **192-2**. Also, power is supplied to the single feeding point **192***a* of emission conductor **192** by means of coaxial feeding line **194** from power feeding source **195** through a hole **191** a provided in ground conductor **191**.

With such a construction, the effective resonance length of first emission conductor **192-1** and second emission conductor **192-2** can be altered, thereby making possible further miniaturization of the multifrequency inverted F-ype antenna **190**.

Although, in the first to seventh embodiments described above, feeding points **12***a*, **122***a*, **132***a*, **142***a*, **152***a*, **192***a* were provided at the centers of emission conductors **12**, **122**, **132**, **142**, **152**, and **192**, it would also be possible to provide feeding points **12***a*, **122***a*, **132***a*, **142***a*, **152***a*, and **192***a* in positions offset from the centers of emission conductors **12**, **122**, **132**, **142**, **152** and **192**.

FIG. **20** is a perspective view showing an eighth embodiment of a multifrequency inverted F-type antenna according to the present invention.

Referring to FIG. **20**, in the multifrequency inverted F-type antenna **200**, there are formed a first emission conductor **202-1** and second emission conductor **202-2** on emission conductor **202** by forming a cut-out part **202***b* in the emission conductor **202** whose one end is connected to short-circuit plate **203** that is planted in ground conductor **201**. Thus it is made possible to receive radio waves of two different frequency bands, namely, a first frequency band determined by the shape of first emission conductor **202-1** and a second frequency band determined by the shape of second emission conductor **202-2**.

A feeding point **202***a* is provided at a position offset by L from the center of emission conductor **202**, and power is supplied to the feeding point **202***a* by coaxial feeding line **204** from power feeding source **205** through a hole **201** a provided in ground conductor **201**.

With such a construction, matching with a sending/receiving circuit, not shown, in which the multifrequency inverted F-type antenna **200** is employed can be achieved by adjusting the position of the feeding point **202***a*.

Industrial Applicability

The present invention consists in a multifrequency inverted F-type antenna for use chiefly as the internal antenna of a small, thin radio communication terminal such as a portable telephone, whereby radio waves in a plurality of frequency bands can be received without making the size of the antenna large.

According to the present invention, a construction is provided whereby radio waves of two different frequency bands can be received, namely, a first frequency band determined by the shape of a first emission conductor and a second frequency band determined by the shape of a second emission conductor, by forming a first emission conductor and second emission conductor that resonate in respective different frequency bands on an emission conductor, by forming a cut-out part in the emission conductor, which is provided with a feeding point and whose one end is connected to a short-circuit plate planted in a ground conductor; a multiple-frequency inverted F-type antenna of small size and small thickness can thereby be implemented with low cost without increasing either the installation area or installation volume.

What is claimed is:

1. A multifrequency inverted F-type antenna comprising:

a ground conductor element;

a short-circuit element disposed on the ground conductor element;

a first radiation conductor element spaced apart from the ground conductor element being connected to the short-

circuit element at a first end connection portion of the first radiation conductor element and having a hole;

a second radiation conductor element disposed in the hole of the first radiation conductor element, being connected to the first radiation conductor element at a second end connection portion of the second radiation conductor element and being spaced apart from the ground conductor plate; and

a feeding point connection part disposed on the first radiation conductor element between the first end connection portion and the second end connection portion, for feeding signals to the first and second radiation conductor elements.

2. The multifrequency inverted F-type antenna according to claim **1** wherein the second radiation conductor element is formed integrally with the first radiation conductor element.

3. The multifrequency inverted F-type antenna according to claim **1** wherein the second radiation conductor element has a single projection and operates in two frequency bands dependent on shapes of the first radiation conductor element and the second radiation conductor element.

4. The multifrequency inverted F-type antenna according to claim **3** wherein respectively different distances are set for a first spacing between the first radiation conductor element and the ground conductor element, and a second spacing between the second radiation conductor element and the ground conductor element.

5. The multifrequency inverted F-type antenna according to claim **3** wherein a dielectric element is arranged in at least one of the first and second spacings, so that a first dielectric constant between the first radiation conductor element and the ground conductor element and a second dielectric constant between the second radiation conductor element and the ground conductor element are made different.

6. The multifrequency inverted F-type antenna according to claim **1** wherein the second radiation conductor element has a plurality of projections and operates in a plurality of frequency bands dependent on shapes of the first radiation conductor element and the second radiation conductor element.

7. The multifrequency inverted F-type antenna according to claim **6** wherein respectively different distances are set for a first spacing between the first radiation conductor element and the ground conductor element, and a plurality of second spacings between each of the plurality of projections of the second radiation conductor element and the ground conductor element.

8. The multifrequency inverted F-type antenna according to claim **6** wherein dielectric element is arranged in at least one of a spacing between the first radiation conductor element and the ground conductor element and spacings between each of the projections of the second radiation conductor element and the ground conductor element, so that a first dielectric constant between the first radiation conductor element and the ground conductor element and a second dielectric constant between the projections of the second radiation conductor element and the ground conductor element, respectively, are made to be different.

9. The multifrequency inverted F-type antenna according to claim **1** wherein the feeding point is arranged in the middle of the feeding point connection part in the width direction of the first radiation conductor element.

10. The multifrequency inverted F-type antenna according to claim **1** wherein the feeding point is arranged at a position offset by a prescribed distance from the middle of the feeding point connection part in the width direction of the first radiation conductor element.

11. The multifrequency inverted F-type antenna according to claim **1** wherein the short-circuit element is formed of a length the same as a length of the first radiation conductor element in the width direction.

12. The multifrequency inverted F-type antenna according to claim **1** wherein the short-circuit element is formed of a shorter length than a length of the first radiation conductor element in the width direction and with its center offset from the center of the first radiation conductor element in the width direction.

13. A multifrequency inverted F-type antenna comprising:

a ground conductor element;

a short-circuit element disposed on the ground conductor element;

a first radiation conductor element facing the ground conductor element, being connected to the short-circuit element at a first end connection portion of the first radiation conductor element and having a cut-out part in the interior thereof;

a second radiation conductor element formed inside the cut-out part of the first radiation conductor element, facing the ground conductor element and being connected to the first radiation conductor element at a second end connection portion of the second radiation conductor element; and

a feeding point connection part provided between the first end connection portion and the second end connection portion, for feeding signals to the first and second radiation conductor elements.

14. A multifrequency inverted F-type antenna comprising:

a ground conductor element;

a short-circuit element planted on the ground conductor element;

a first radiation conductor element facing the ground conductor element, one end of the first radiation conductor being connected to the short-circuit element and having a cut-out part in the interior thereof;

a second radiation conductor element formed inside the cut-out part of the first radiation conductor element and facing the ground conductor element and being connected to the first radiation conductor element; and

a feeding point connection part provided between the cut-out part and the short-circuit element, for providing signals to the first and second radiation conductor elements.

* * * * *