US006606071B2

(12) **United States Patent**
Cheng et al.

(10) **Patent No.: US 6,606,071 B2**
(45) **Date of Patent: Aug. 12, 2003**

(54) **MULTIFREQUENCY ANTENNA WITH A SLOT-TYPE CONDUCTOR AND A STRIP-SHAPED CONDUCTOR**

(75) Inventors: **Wei-Li Cheng**, Taipei Hsien (TW); **Chien-Hsing Fang**, Taipei Hsien (TW)

(73) Assignee: **Wistron NeWeb Corporation**, Taipei Hsien (TW)

(*) Notice: Subject to any disclaimer, the term of this patent is extended or adjusted under 35 U.S.C. 154(b) by 0 days.

(21) Appl. No.: **09/683,362**

(22) Filed: **Dec. 18, 2001**

(65) **Prior Publication Data**

US 2003/0112195 A1 Jun. 19, 2003

(51) **Int. Cl.**[7] **H01Q 13/10**
(52) **U.S. Cl.** ..... **343/767**; 343/700 MS
(58) **Field of Search** ..... 343/700 MS, 702, 343/767, 768, 769, 770, 846; H01Q 13/10

(56) **References Cited**

U.S. PATENT DOCUMENTS

5,754,143 A * 5/1998 Warnagiris et al. 343/767
6,031,503 A * 2/2000 Preiss et al. 343/770
6,339,400 B1 * 1/2002 Flint et al. 343/702
6,373,442 B1 * 4/2002 Thomas et al. 343/767
6,407,715 B1 * 6/2002 Chen 343/767
6,414,642 B2 * 7/2002 Honda et al. 343/702

* cited by examiner

Primary Examiner—Tho G. Phan
(74) *Attorney, Agent, or Firm*—Winston Hsu

(57) **ABSTRACT**

A multifrequency antenna for a wireless communications system includes a metallic plate having a slot. The slot is used for transmitting and receiving radio signals of a first frequency band. The length of the slot corresponds to the first frequency band at which signals are transmitted and received. The antenna also includes a metallic strip connected to the metallic plate for transmitting and receiving radio signals of a second frequency band. The metallic strip may be formed as an L-shaped strip. The length of the horizontal portion of the L-shaped strip corresponds to the second frequency band at which signals are transmitted and received.

16 Claims, 8 Drawing Sheets

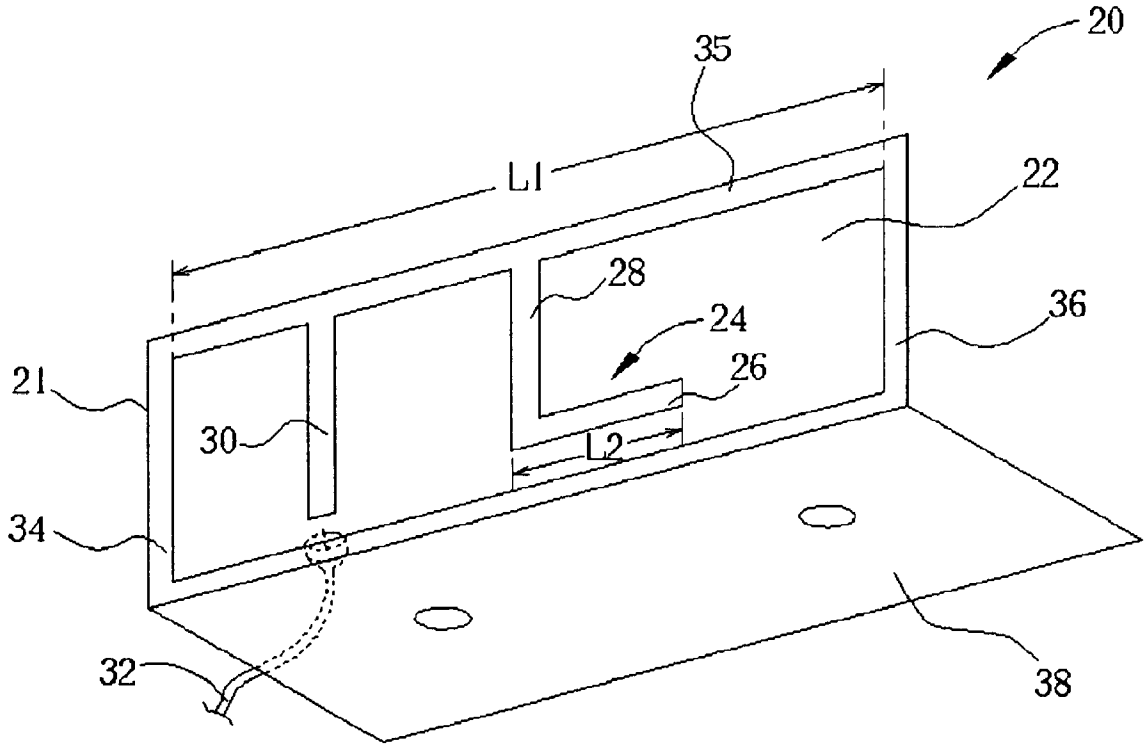

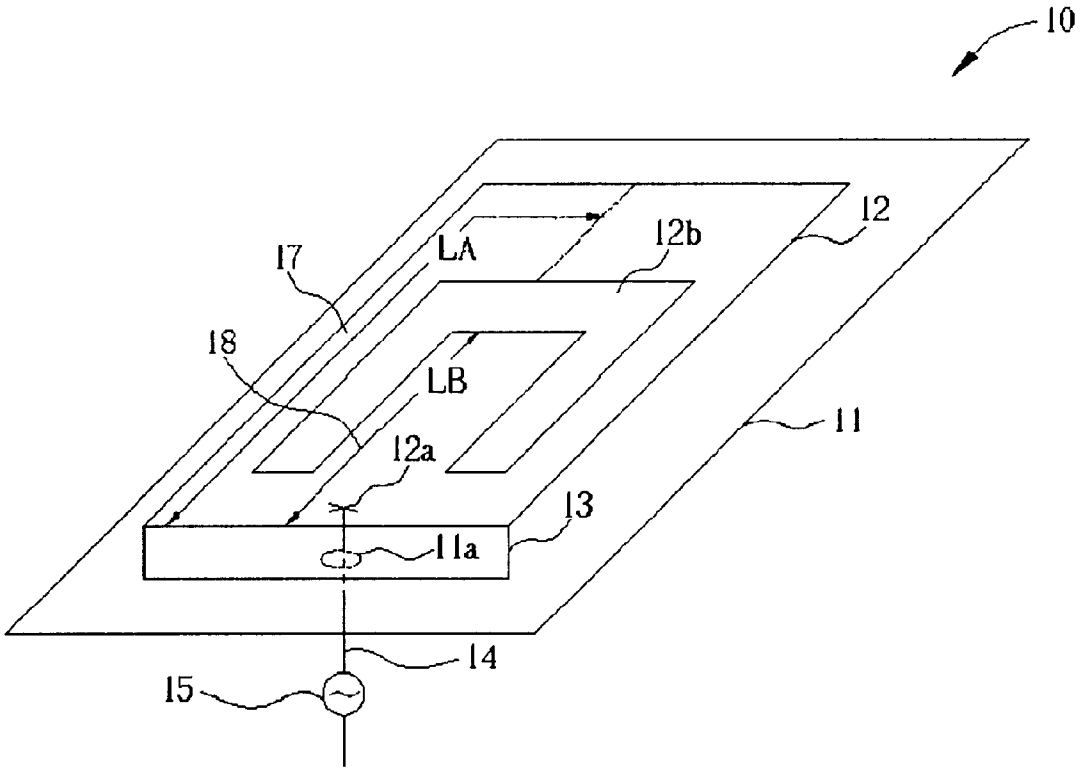

Fig. 1 Prior art

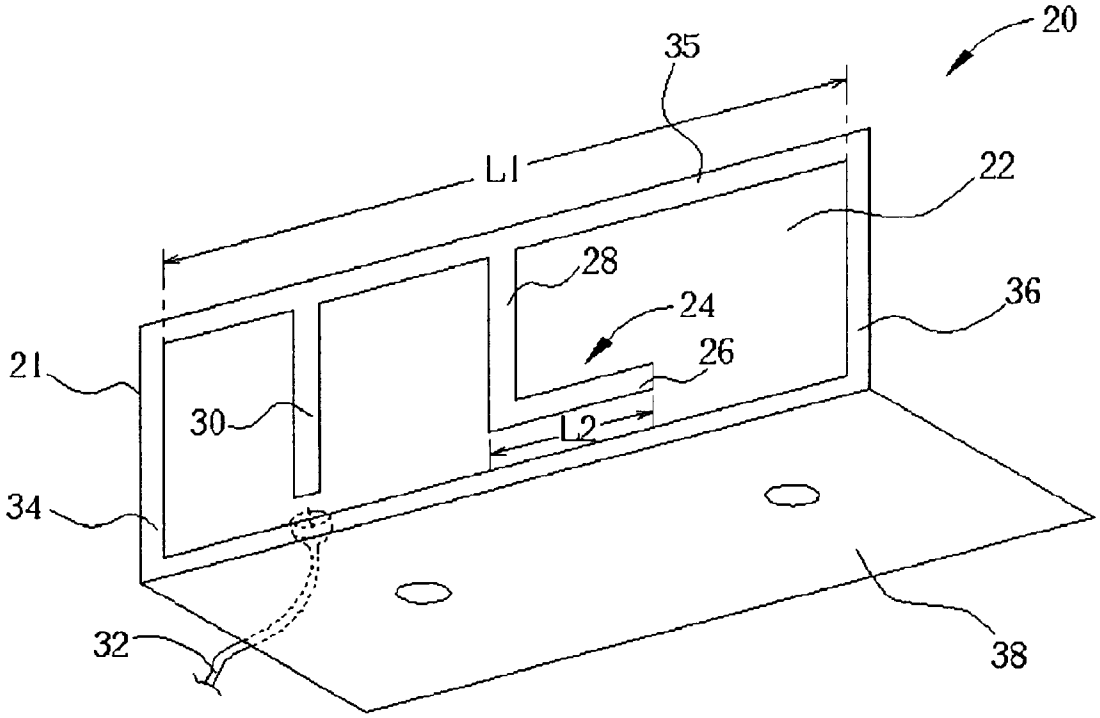

Fig. 2

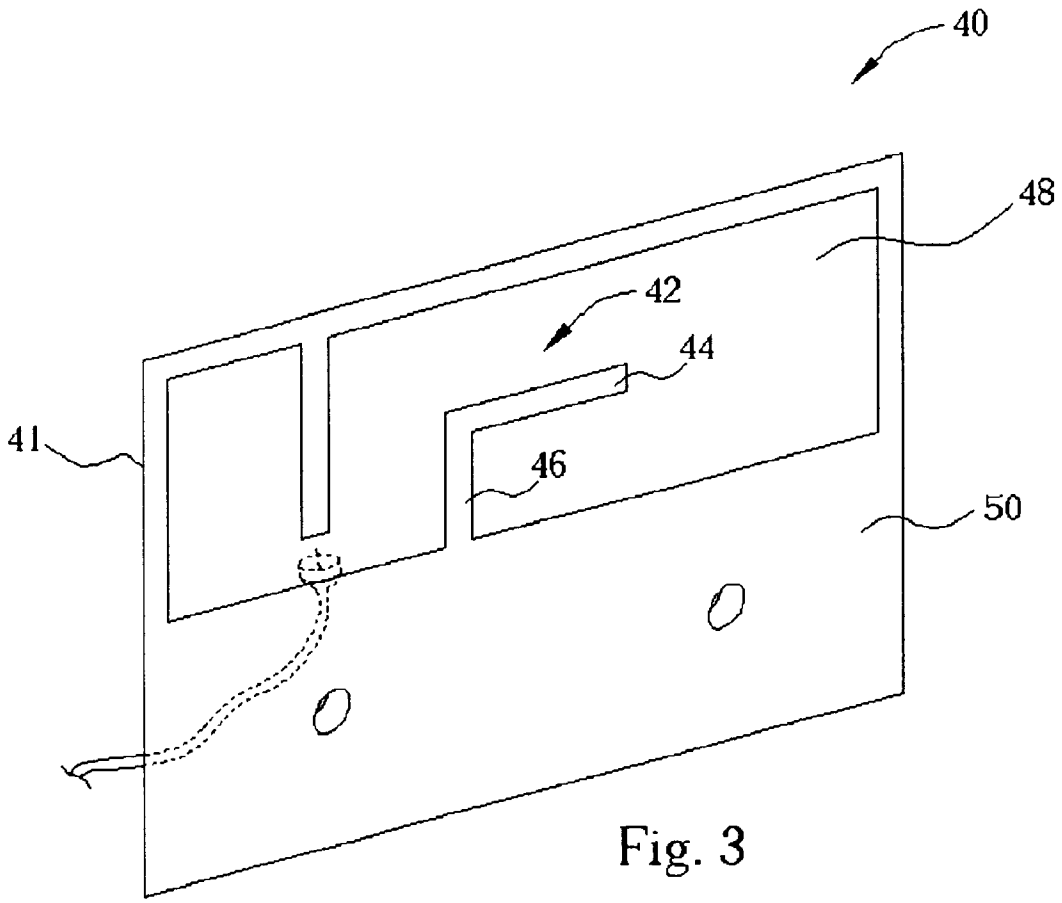

Fig. 3

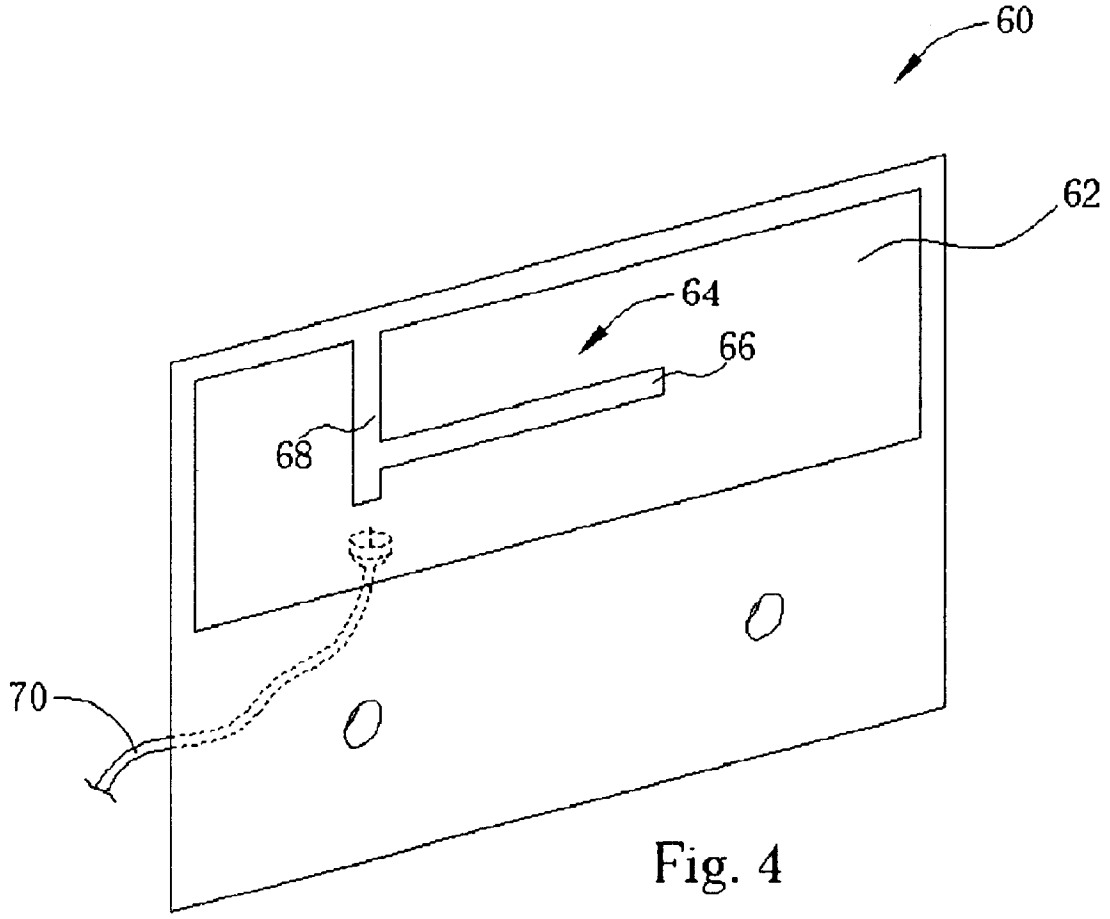

Fig. 4

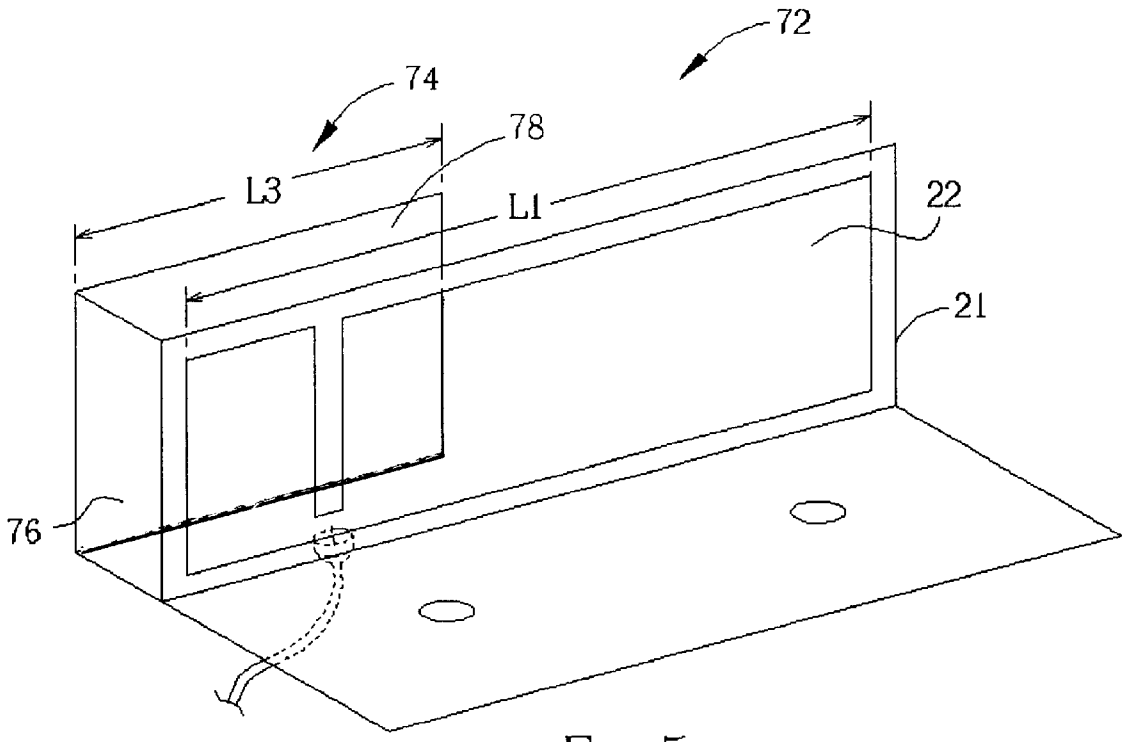

Fig. 5

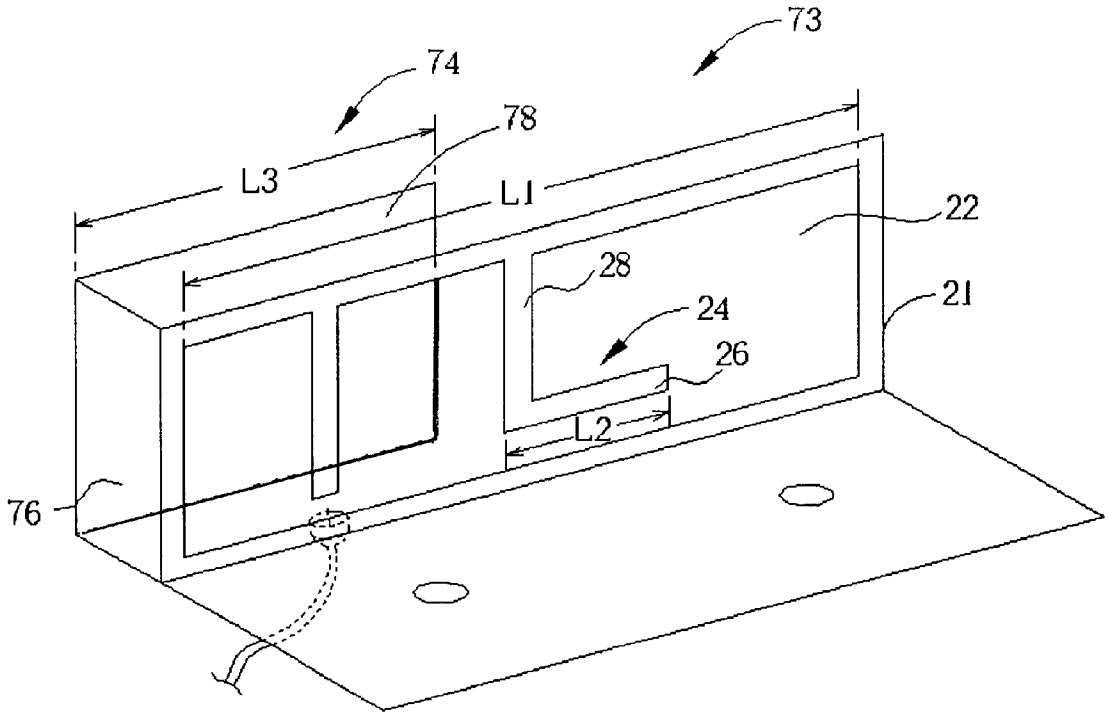

Fig. 6

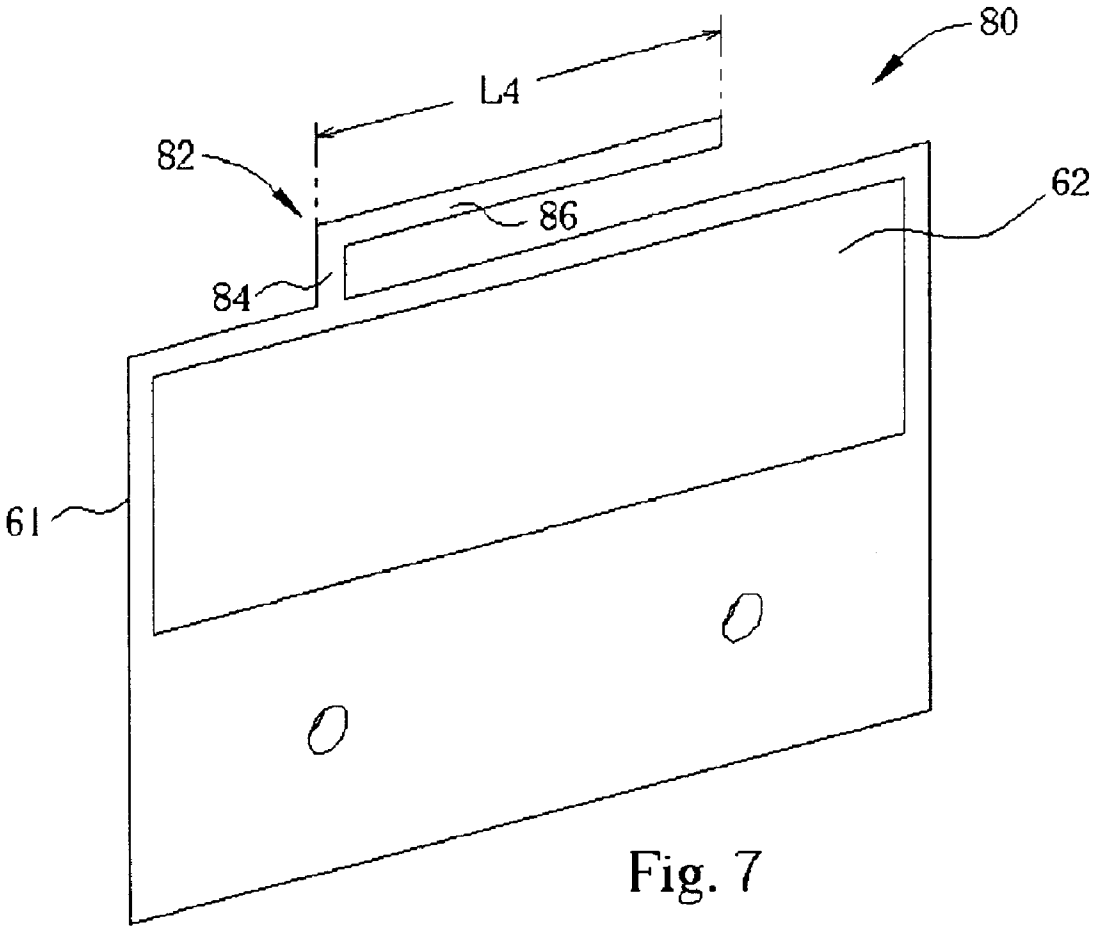

Fig. 7

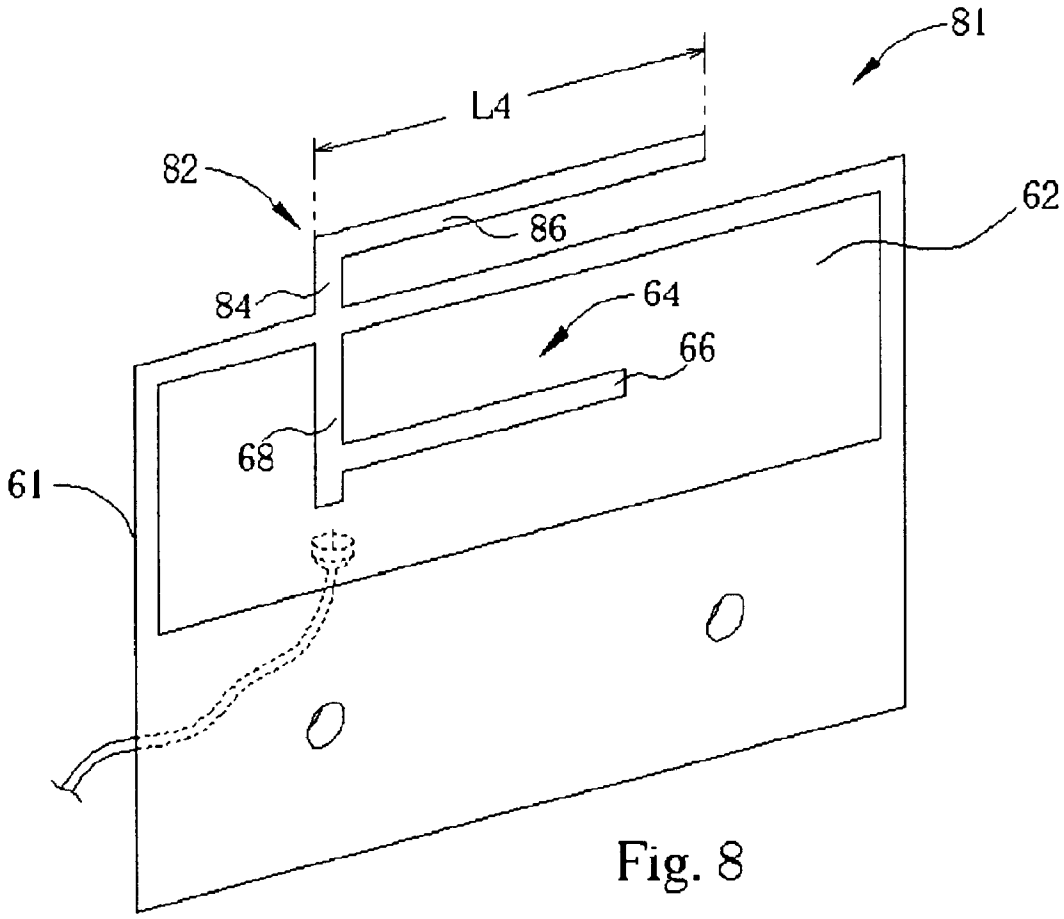

Fig. 8

MULTIFREQUENCY ANTENNA WITH A SLOT-TYPE CONDUCTOR AND A STRIP-SHAPED CONDUCTOR

BACKGROUND OF INVENTION

1. Field of the Invention

The present invention relates to a multifrequency antenna, and more particularly, to a multifrequency antenna containing a slot-type conductor and a strip-shaped conductor.

2. Description of the Prior Art

Recently, the demand for antennas in mobile wireless applications has increased dramatically. In order to increase the use and versatility of antennas, there is a need for a single antenna operable in two or more separate frequency bands. In addition, antennas need to have a small size in order to meet the size requirements of today's wireless devices.

U.S. Pat. No. 6,195,048 discloses a multifrequency planar inverted F antenna (PIFA). FIG. **1** is a perspective view of a prior art multifrequency planar inverted F antenna **10** disclosed in U.S. Pat. No. 6,195,048. For transmitting and receiving radio signals, the antenna **10** includes an emission conductor **12**. The emission conductor **12** comprises a first emission conductor **17** and a second emission conductor **18** that resonate in respectively different frequency bands. The first emission conductor **17** and the second emission conductor **18** are separated by a cutout part **12***b* in the emission conductor **12**. With this construction, the antenna **10** is capable of receiving radio waves of two different frequency bands: a first frequency band determined by the shape of first emission conductor **17** and a second frequency band determined by the shape of second emission conductor **18**.

As shown, the first emission conductor **17** has a resonance length LA and the second emission conductor **18** has a resonance length LB. One end of the emission conductor **12** is connected to a ground conductor **11** through a short-circuit plate **13**. Power is supplied to a single feeding point **12***a* of the emission conductor **12** by a coaxial feeding line **14** from power feeding source **15**. The coaxial feeding line **14** is connected through a hole **11***a* provided in ground conductor **11**.

With this construction, the antenna **10** resonates in a first frequency band corresponding to length LA of the first emission conductor **17**. LA is approximately equal to lambda**1**/**4**, where lambda**1** is the wavelength of the first frequency. The antenna **10** also resonates in a second frequency band corresponding to length LB of the second emission conductor **18**. LB is approximately equal to lambda**2**/**4**, where lambda**2** is the wavelength of the second frequency. As a result of using the first emission conductor **17** and the second emission conductor **18**, the antenna **10** is capable of receiving radio waves of two frequency bands.

However, the prior art antenna **10** uses the short-circuit plate **13** to connect one end of the emission conductor **12** to the ground conductor **11**. The use of the short-circuit plate **13** adds extra height, and therefore extra volume, to the antenna **10**.

SUMMARY OF INVENTON

It is therefore a primary objective of the claimed invention to provide a multifrequency antenna with a slot-type conductor and a strip-shaped conductor to solve the above-mentioned problems.

According to the claimed invention, the antenna comprises a metallic plate having a slot. The slot is used to transmit and receive radio signals of a first frequency band. The antenna further comprises a metallic strip connected to the metallic plate for transmitting and receiving radio signals of a second frequency band.

It is an advantage of the claimed invention that the antenna uses both the slot and the metallic strip in order to provide a multifrequency antenna with a smaller height in order to overcome the prior art shortcomings.

These and other objectives of the claimed invention will no doubt become obvious to those of ordinary skill in the art after reading the following detailed description of the preferred embodiment that is illustrated in the various figures and drawings.

BRIEF DESCRIPTION OF DRAWINGS

FIG. **1** is a perspective view of a multifrequency planar inverted F antenna according to the prior art.

FIG. **2** is a perspective view of a multifrequency antenna containing a slot-type conductor and a strip-type conductor according to the first embodiment of the present invention.

FIG. **3** to FIG. **8** are perspective views of multifrequency antennas according to the second through seventh embodiments of the present invention.

DETAILED DESCRIPTION

Please refer to FIG. **2**. FIG. **2** is a perspective view of a multifrequency antenna **20** containing a slot **22** and an L-shaped strip **24** according to the first embodiment of the present invention. The antenna **20** comprises a metallic plate **21**, which includes the slot **22** for transmitting and receiving radio signals of a first frequency band. The slot **22** has a length L**1** that is approximately equal to lambda**1**/**2**, where lambda**1** is the wavelength of radio signals of the first frequency band. In this particular case, the length L**1** of the slot **22** corresponds to half a wavelength of radio signals in the first frequency band. However, the length L**1** of the slot **22** could also correspond to another fraction of the wavelength of radio signals in the first frequency band such as a quarter of the wavelength.

The antenna **20** further comprises a feed strip **30** that is connected to the metallic plate **21**, and the L-shaped strip **24** that is also connected to the metallic plate **21**. Both the feed strip **30** and the L-shaped strip **24** are made out of conductive metal. The feed strip **30** is fed by a feed line **32** across the slot **22** for feeding radio signals to the feed strip **30** and for receiving radio signals from the feed strip **30**. The feed line **32** connects to a feeding point on the feed strip **30**. The L-shaped strip **24** includes a horizontal strip **26** of length L**2** and a vertical strip **28**. The vertical strip **28** has an end connected to the metallic plate **21**, and in this particular embodiment, the feed strip **30** and the vertical strip **28** of the L-shaped strip **24** both connect to a same side of the metallic plate **21**. Yet, if so desired, the vertical strip **28** and the feed strip **30** may be connected to different sides of the metallic plate **21**. The horizontal strip **26** is used for transmitting and receiving radio signals of a second frequency band. The length L**2** of the horizontal strip **26** is approximately equal to lambda**2**/**4**, where lambda**2** is the wavelength of radio signals of the second frequency band.

The metallic plate **21** has three side strips **34**, **35**, **36** and a ground strip **38** surrounding the slot **22** to give the slot **22** a shape of a rectangle. In this embodiment of the present invention, the metallic plate **21** is bent in a manner such that the ground strip **38** lies in a different plane than a plane shared by the three side strips **34**, **35**, **36**. The metallic plate

21 can be bent at any angle desired, or not bent at all, in order to satisfy size requirements.

What distinguishes the present invention antenna **20** from the prior art antenna **10** is the use of both the slot **22** and the L-shaped strip **24** for transmitting and receiving radio signals. Like the prior art antenna **10**, the L-shaped strip **24** and the feed strip **30** form an antenna structure which functions in a way similar to an inverted F antenna that transmits and receives radio signals corresponding to L2=lambda2/4. However, the present invention antenna **20** also uses the slot **22**, which transmits and receives radio signals corresponding to L1=lambda1/2. Instead of solely relying upon the PIFA structure to realize a multifrequency antenna, the present invention antenna **20** uses a combination of the inverted F antenna structure and the slot antenna structure to form another type of multifrequency antenna. Because in this first embodiment the L-shaped strip **24** is formed inside the slot **22**, it is clear that the length L1 of the slot **22** must be greater than the length L2 of the horizontal strip **26**.

Please refer to FIG. **3**. FIG. **3** is a perspective view of another multifrequency antenna **40** according to the second embodiment of the present invention. Like before, the antenna **40** comprises a metallic plate **41** including a slot **48**. The slot **48** also has an L-shaped strip **42** with a horizontal strip **44** and a vertical strip **46**. In addition, the metallic plate **41** contains a ground strip **50** on one side of the slot **48**. The antenna **40** is very similar to the antenna **20** from FIG. **2**, and only has two major differences. The first difference is the portion of the metallic plate **41** containing the ground strip **50** is not bent in this embodiment. The other difference concerns a location of the L-shaped strip **42**. Specifically, the vertical strip **46** of the L-shaped strip **42** is now connected to the ground strip **50** of the metallic plate **41**. In fact, the L-shaped strip **42** of the antenna **40** may be connected to any portion of the metallic plate **41**. Furthermore, the strip **42**, though being L-shaped in the present embodiment, can have an arbitrary shape and size, be either parallel or at any three-dimensional angle with respect to the slot **48**, can lie outside of the slot **48**, and lie either in a same plane or in a different plane as the slot **48**, so long as wave resonance can be created and communication frequency characteristics remain desired.

Please refer to FIG. **4** with reference to FIG. **2**. FIG. **4** is a perspective view of another multifrequency antenna **60** according to the third embodiment of the present invention. Like before, the antenna **60** comprises a slot **62**. The slot **62** includes an L-shaped strip **64** with a horizontal strip **66** and a vertical strip **68**. However, unlike the antenna **20** of FIG. **2**, the antenna **60** does not contain the feed strip **30** in addition to the L-shaped strip **24**. Instead, the antenna **60** uses the L-shaped strip **64** to combine functionality of both the feed strip **30** and the L-shaped strip **24**. Notice that the L-shaped strip **64** has a feed line **70** attached to the vertical strip **68** for transmitting and receiving radio signals. Since the horizontal strip **66** determines a second frequency band, the vertical strip **68** can be employed to connect to the feed line **70** directly, providing a simpler design of the antenna **60**.

In addition to the three embodiments described above, the present invention allows for other implementations of the multifrequency antenna. For example, the slot can be of any desired shape other than a rectangle so long as the frequency characteristics remain in place. Moreover, transmitting and receiving in more than two frequency bands can be achieved by the addition of other elongated strips to the antenna. In this way, either a dual-band antenna or multifrequency antenna can be created.

Please refer to FIG. **5**. FIG. **5** is a perspective view of another multifrequency antenna **72** according to the fourth embodiment of the present invention. An L-shaped metallic strip **74** has an extending section **76** connected to the metallic plate **21**. The metallic strip **74** also has a resonating section **78** connected to the extending section **76**. The main difference between the antenna **72** shown in FIG. **5** and other antennas shown is that the metallic strip **74** lies outside the slot **22** and is positioned in space. In addition, the metallic strip **74** is three dimensional instead of lying in one plane like before. The resonating section **78** has a length L3 that corresponds to a frequency at which the metallic strip **74** is able to transmit and receive radio signals. Like before, the length L1 of the slot **22** is used to transmit and receive at another frequency. Therefore, the antenna **74** shown in FIG. **5** is a dual-frequency antenna.

Please refer to FIG. **6**. FIG. **6** is a perspective view of another multifrequency antenna **73** according to the fifth embodiment of the present invention. The antenna **73** uses a combination of the features in the antenna **20** from FIG. **2** and the antenna **72** from FIG. **5**. The only difference over the antenna **72** is the inclusion of the L-shaped strip **24**. By using the slot **22**, the L-shaped strip **24**, and the metallic strip **74**, the antenna **73** is able to transmit and receive radio signals at three frequencies. Furthermore, additional metallic strips **74** could be added to the antenna **73** for transmitting and receiving at even more frequencies. FIGS. **5** and **6** are shown to illustrate an additional way to form multifrequency antennas according to the present invention. Although the use of the metallic strip **74** adds volume to the antennas **72**, **73**, it provides an additional design option of the antennas **72**, **73**.

Please refer to FIG. **7**. FIG. **7** is a perspective view of another multifrequency antenna **80** according to the sixth embodiment of the present invention. This embodiment shows an external L-shaped strip **82** lying outside the slot **62**. The L-shaped strip **82** has an extending section **84** with one end connected to a section of a metallic plate **61**. The L-shaped strip also has a resonating section **86** for transmitting and receiving radio signals corresponding to a length L4 of the resonating section. The antenna **80** uses the L-shaped strip **82** together with the slot **62** to form a dual-frequency antenna.

Please refer to FIG. **8**. FIG. **8** is a perspective view of another multifrequency antenna **81** according to the seventh embodiment of the present invention. The antenna **81** combines the features shown in the antenna **60** from FIG. **4** and the antenna **80** shown in FIG. **7**. Specifically, the antenna uses the external L-shaped strip **82**, the L-shaped strip **64**, and the slot **62** to transmit and receive radio signals at three frequencies. Additional external L-shaped strips **82** could also be added to facilitate transmitting and receiving at even more frequencies. Although the use of the external L-shaped strip **82** adds surface area to the antenna **81**, it provides an additional design option of the antenna **81**. To help minimize the volume of the antenna **81**, the external L-shaped strip **82** could be positioned inside the slot **62** so long as there is no interference with the L-shaped strip **64** lying inside the slot **62**.

In contrast to the prior art, wherein the antenna structure is purely of PIFA type, the multifrequency antenna according to the present invention uses both the slot, which functions in accordance with a slot-type antenna, and the metallic strip, which can be considered as a variation of an inverted F antenna, in order to provide a multifrequency antenna with a smaller height in order to effectively reduce the volume of the antenna.

Those skilled in the art will readily observe that numerous modifications and alterations of the device may be made

while retaining the teachings of the invention. Accordingly, the above disclosure should be construed as limited only by the metes and bounds of the appended claims.

What is claimed is:

1. A multifrequency antenna for a wireless communications system comprising:

a metallic plate comprising a ground strip and an elongated slot;

an elongated conductive feed strip attached to the metallic plate and extending lengthwise within and across at least a portion of a width of the slot;

a first elongated conductive strip attached to the metallic plate and extending lengthwise within and across at least a portion of the width of the slot;

a second elongated conductive strip attached to the first elongated conductive strip and extending lengthwise within and across at least a portion of a length of the slot; and

a feedline connected to the conductive feed strip for feeding radio signals to the feed strip and for receiving radio signals from the feed strip.

2. The multifrequency antenna of claim **1** wherein the feed line is connected with the metallic plate and the conductive feed strip for feeding radio signals to the multifrequency antenna.

3. The multifrequency antenna of claim **1** wherein the first conductive strip and the second conductive strip form an L-shaped strip with one end connected to the metallic plate, the second conductive strip for transmitting and receiving radio signals of a second frequency band.

4. The multifrequency antenna of claim **3** wherein the slot defines a slot antenna for transmitting and receiving radio signals of a first frequency band.

5. The multifrequency antenna of claim **1** wherein the metallic plate has four side strips, the slot being formed inside the side strips and having a rectangular shape.

6. The multifrequency antenna of claim **5** wherein the conductive feed strip and the first conductive strip are connected to the same side strip of the metallic plate.

7. The multifrequency antenna of claim **5** wherein the conductive feed strip and the first conductive strip are connected to different side strips of the metallic plate.

8. The multifrequency antenna of claim **5** wherein one of the side strips is the ground strip.

9. The multifrequency antenna of claim **8** wherein the metallic plate is bent such that the ground strip is in a different plane than a plane of the remaining three side strips.

10. The the multifrequency antenna of claim **1** wherein the slot and the first conductive strip are formed in the same plane.

11. The multifrequency antenna of claim **1**, wherein the slot creates half-wave resonance.

12. The multifrequency antenna of claim **1**, wherein the second conductive strip creates quarter-wave resonance.

13. A multifrequency antenna for a wireless communications system comprising:

a metallic plate comprising a ground strip and an elongated slot;

a first elongated conductive strip attached to the metallic plate and extending lengthwise within and across at least a portion of a width of the slot;

a second elongated conductive strip attached to first elongated conductive strip and extending lengthwise within and across at least a portion of a length of the slot; and

a feed line connected to the first conductive strip for feeding radio signals to the first conductive strip and for receiving radio signals from the first conductive strip.

14. The multifrequency antenna of claim **13** wherein the feed line is connected with the metallic plate and the first conductive strip for feeding radio signals to the multifrequency antenna.

15. The multifrequency antenna of claim **13** further comprising a radiation conductor connected with the metallic plate, the radiation conductor for transmitting and receiving radio signals within a first frequency range and the second conductive strip for transmiting and receiving radio signals within a second frequency range outside the first frequency range.

16. A multifrequency antenna for a wireless communications system comprising:

a conductive layer comprising a ground strip and edges that define a internal elongated slot;

an elongated conductive feed strip attached to the conductive layer and extending lengthwise within and across at least a portion of a width of the slot; and

an L-shaped conductive strip attached to the conductive layer, the L-shaped strip comprising a horizontal portion and a vertical portion, the vertical portion in the plane of the slot and extending substantially parallel to the feed strip, the horizontal portion in the plane of the slot and extending substantially perpendicular to the vertical portion.

* * * * *