US 20100102776A1

(19) United States

(12) Patent Application Publication

Uchida

(10) Pub. No.: US 2010/0102776 A1

(43) Pub. Date: Apr. 29, 2010

(54) **CHARGING CONTROL APPARATUS FOR ELECTRICALLY POWERED VEHICLE, ELECTRICALLY POWERED VEHICLE, METHOD FOR CHARGING CONTROL FOR ELECTRICALLY POWERED VEHICLE, AND COMPUTER-READABLE RECORDED MEDIUM HAVING PROGRAM RECORDED THEREON FOR COMPUTER TO EXECUTE THE CHARGING CONTROL**

(75) Inventor: **Masatoshi Uchida**, Toyota-shi (JP)

Correspondence Address:
OLIFF & BERRIDGE, PLC
P.O. BOX 320850
ALEXANDRIA, VA 22320-4850 (US)

(73) Assignee: **TOYOTA JIDOSHA KABUSHIKI KAISHA**, TOYOTA-SHI (JP)

(21) Appl. No.: **12/450,324**

(22) PCT Filed: **Mar. 27, 2008**

(86) PCT No.: **PCT/JP2008/056654**

§ 371 (c)(1),
(2), (4) Date: **Sep. 22, 2009**

(30) **Foreign Application Priority Data**

Apr. 25, 2007 (JP) 2007-115889

Publication Classification

(51) **Int. Cl.**
H02J 7/00 (2006.01)

(52) **U.S. Cl.** **320/109**

(57) **ABSTRACT**

An energy cost prediction unit predicts an energy cost for the next travel. A lifetime prediction unit uses a charge amount—lifetime map to predict the lifetime of a power storage device according to an amount of charge to the power storage device. A usage cost prediction unit predicts the cost of using the power storage device according to the amount of charge to the power storage device, based on the lifetime of the power storage device predicted by the lifetime prediction unit. The predicted cost associated with the amount of charge to the power storage device is indicated on a display device. In accordance with an instruction from a user, the power storage device is charged from a charging station.

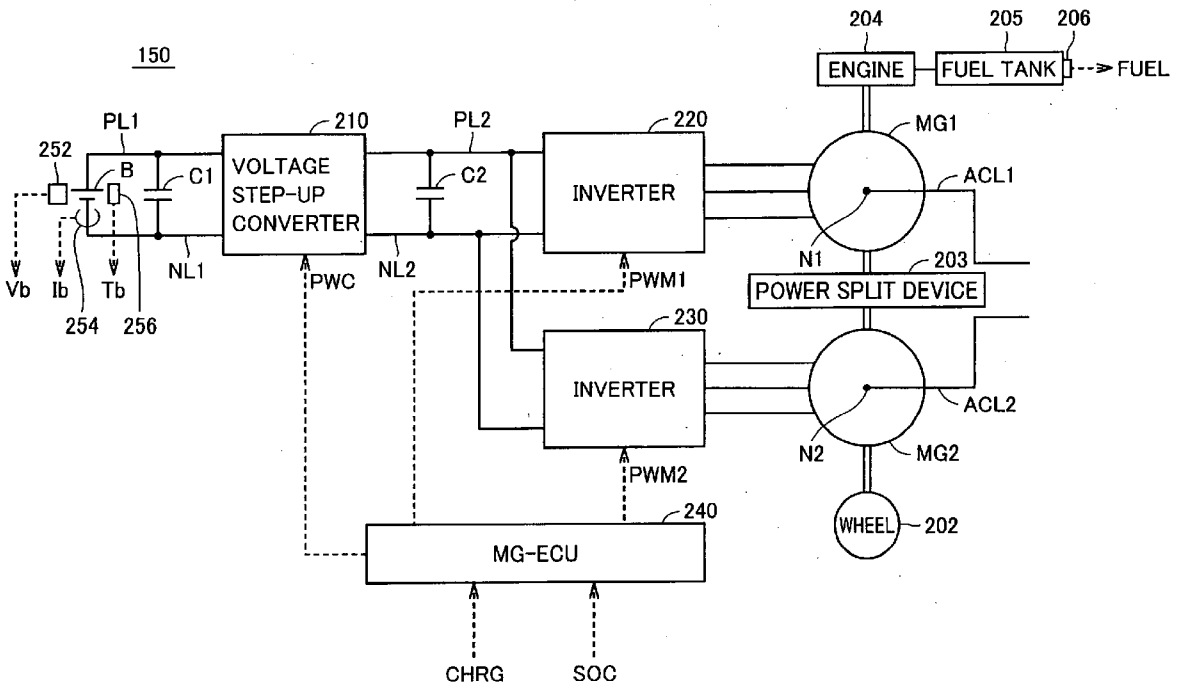

FIG.1

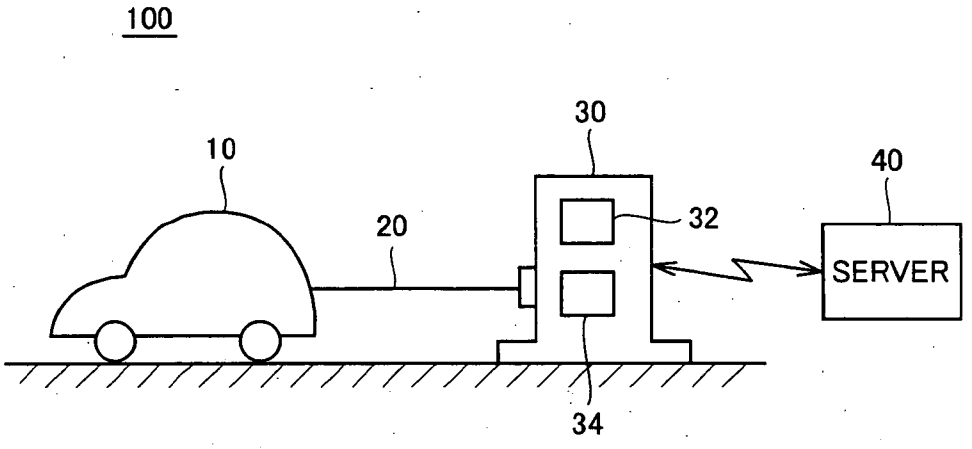
100
10
20
30
32
34
40
SERVER

FIG.2

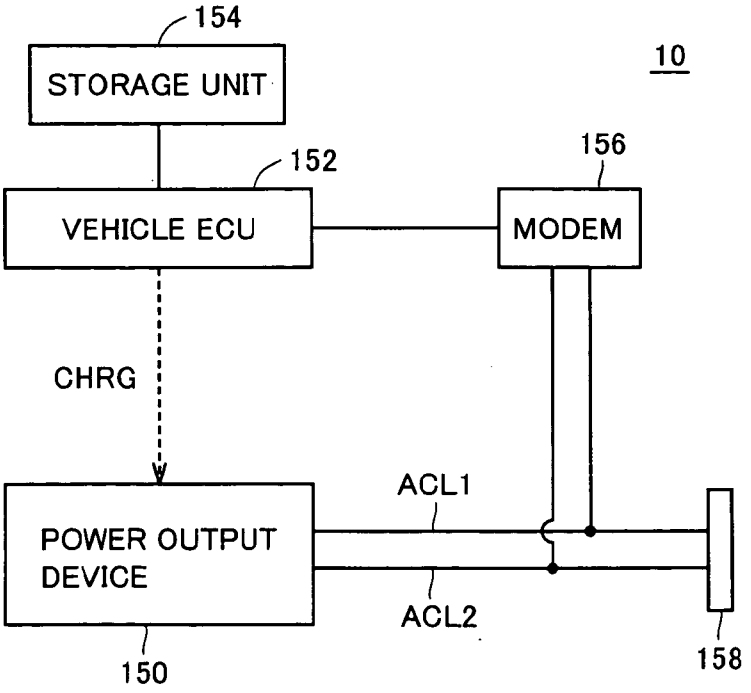
154
STORAGE UNIT
10
152
156
VEHICLE ECU
MODEM
CHRG
ACL1
POWER OUTPUT DEVICE
ACL2
150
158

FIG.3

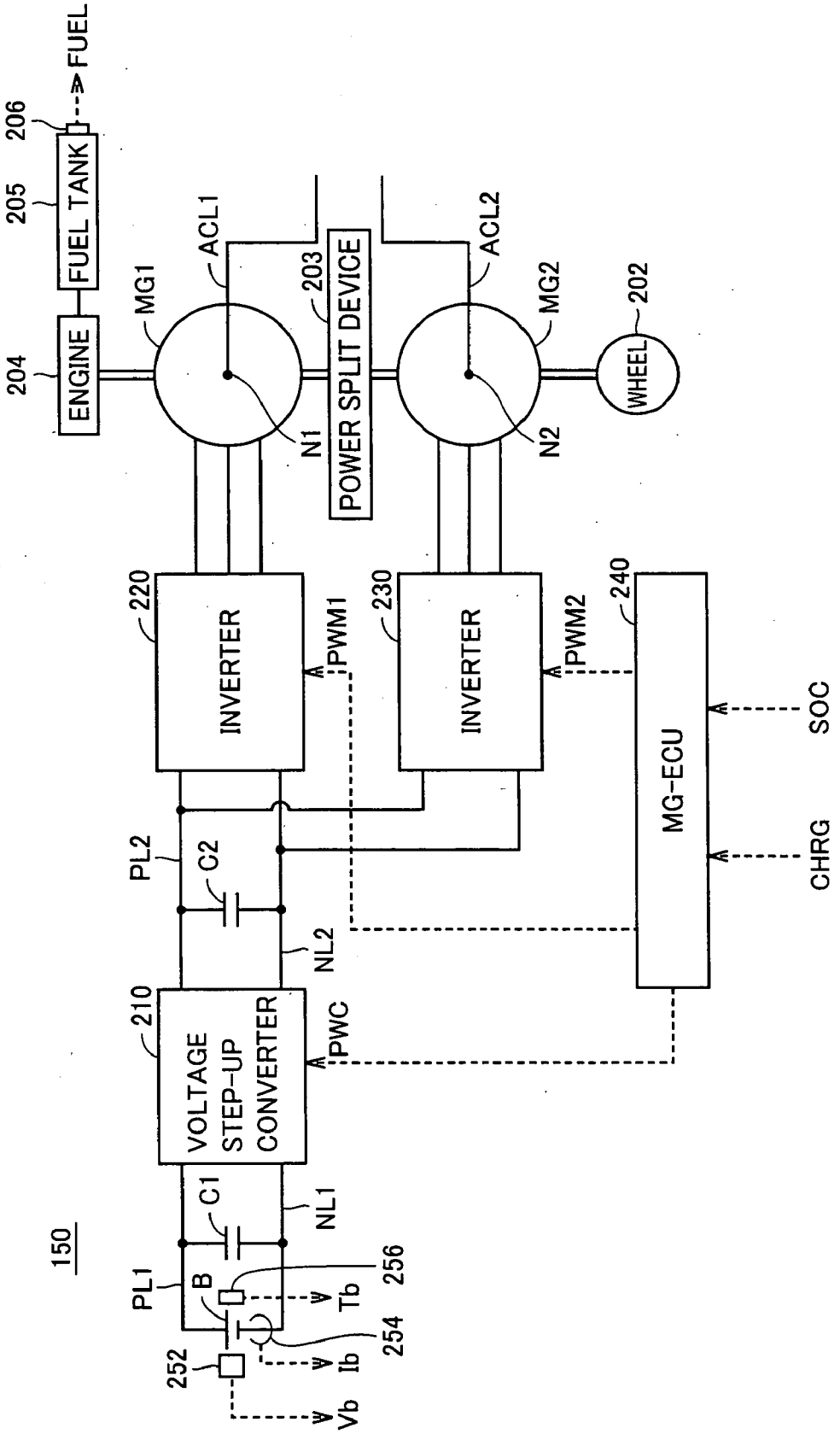
150
FUEL
206
205
FUEL TANK
204
ENGINE
MG1
ACL1
N1
203
POWER SPLIT DEVICE
ACL2
N2
MG2
202
WHEEL
220
INVERTER
PWM1
230
INVERTER
PWM2
240
MG-ECU
SOC
CHRG
PL2
C2
NL2
210
VOLTAGE STEP-UP CONVERTER
PWC
PL1
C1
NL1
B
256
Tb
254
Ib
252
Vb

FIG.4

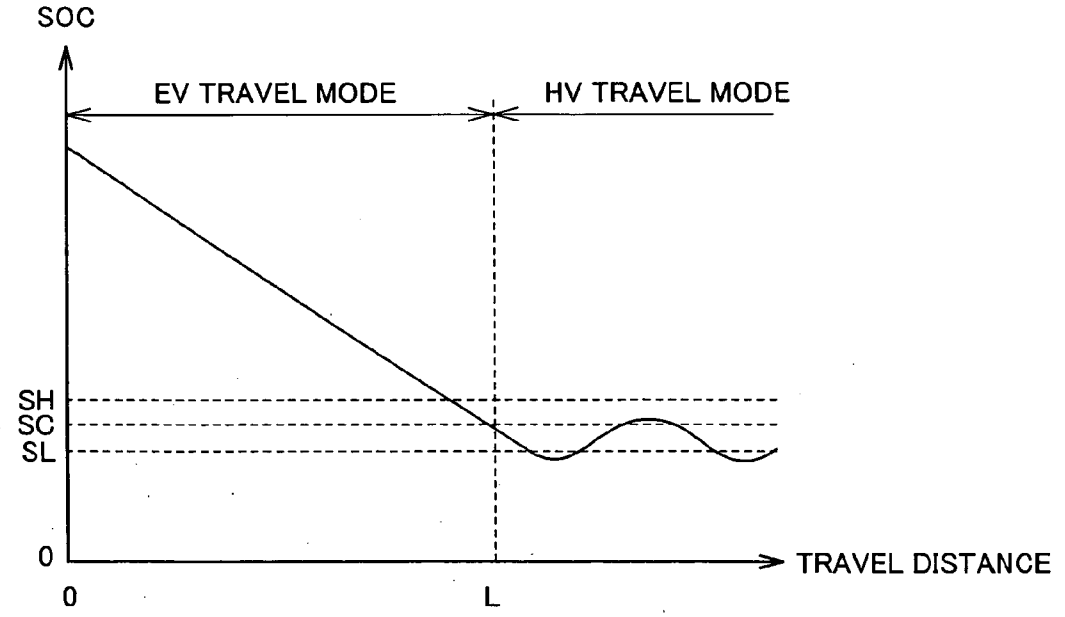
SOC
EV TRAVEL MODE
HV TRAVEL MODE
SH
SC
SL
0
0
L
TRAVEL DISTANCE

FIG.5

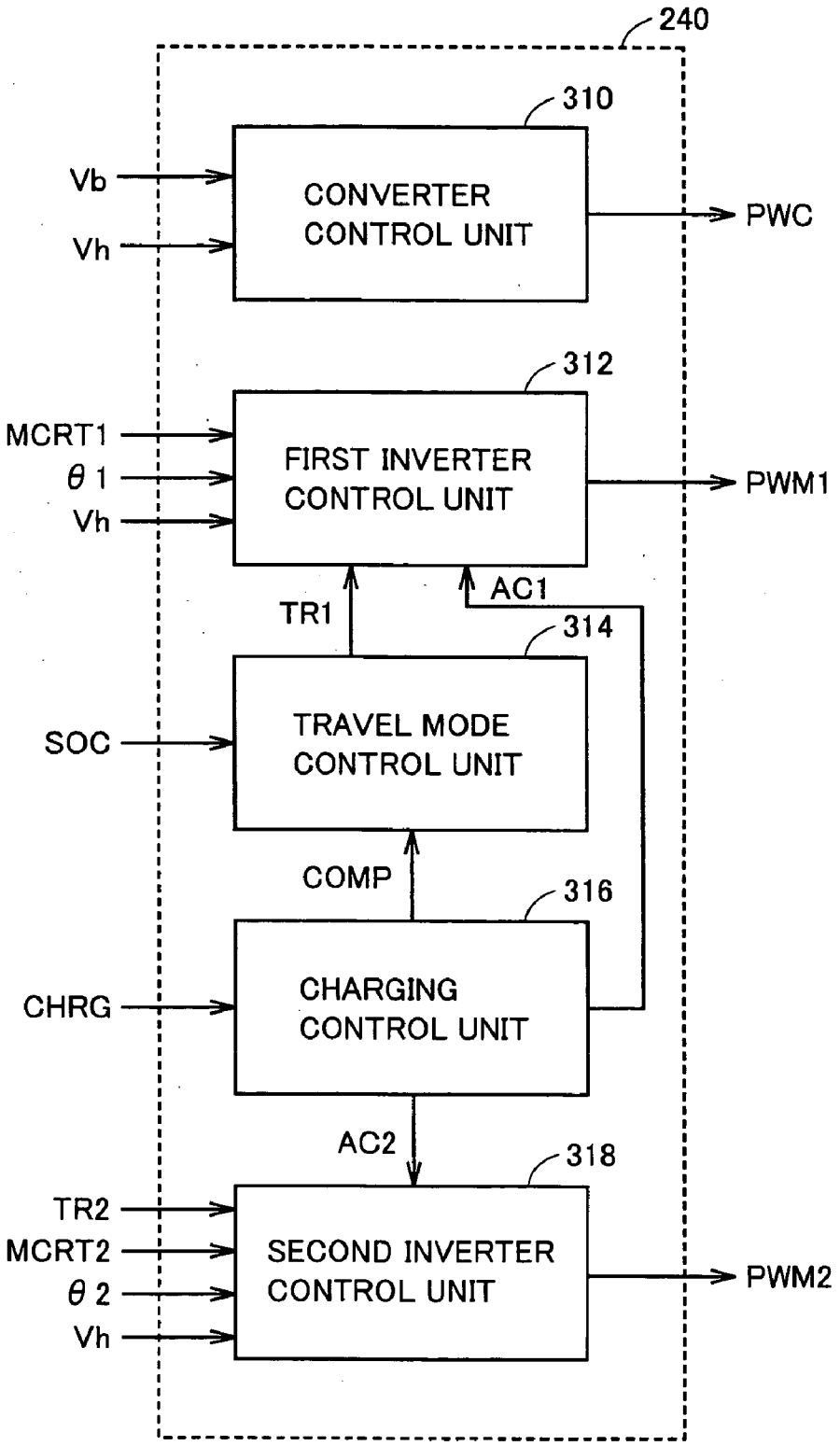
240
310
Vb
Vh
CONVERTER CONTROL UNIT
PWC
312
MCRT1
θ 1
Vh
FIRST INVERTER CONTROL UNIT
PWM1
TR1
AC1
314
SOC
TRAVEL MODE CONTROL UNIT
COMP
316
CHRG
CHARGING CONTROL UNIT
AC2
318
TR2
MCRT2
θ 2
Vh
SECOND INVERTER CONTROL UNIT
PWM2

FIG.6

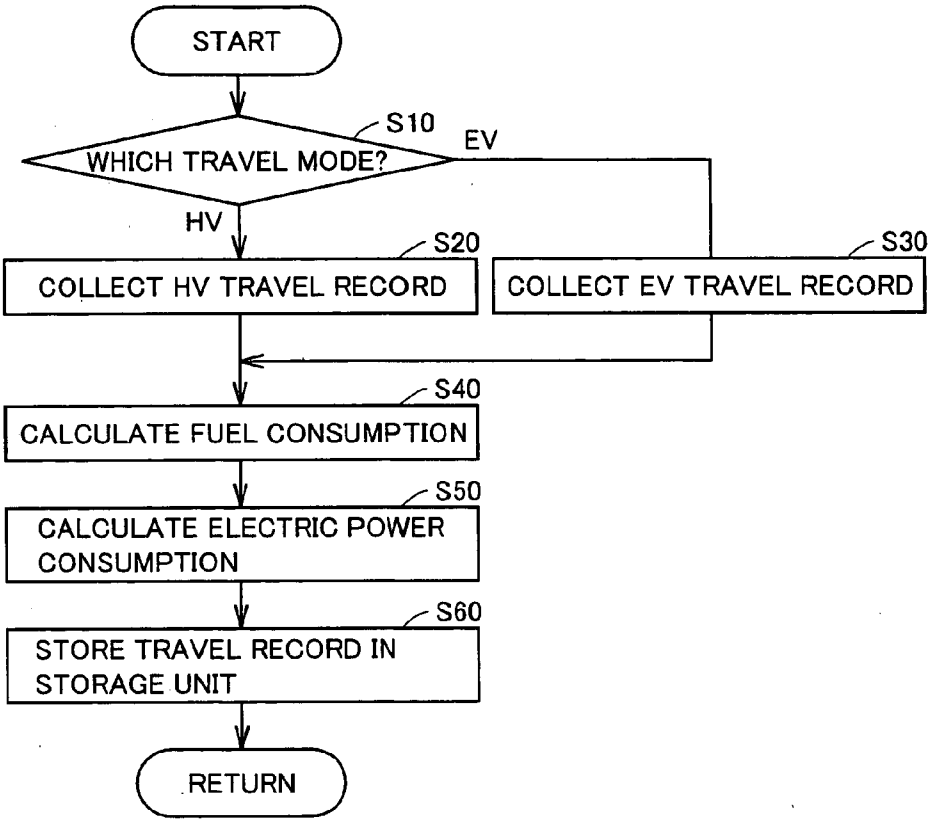
START
S10
WHICH TRAVEL MODE?
EV
HV
S20
COLLECT HV TRAVEL RECORD
S30
COLLECT EV TRAVEL RECORD
S40
CALCULATE FUEL CONSUMPTION
S50
CALCULATE ELECTRIC POWER CONSUMPTION
S60
STORE TRAVEL RECORD IN STORAGE UNIT
RETURN

FIG.7

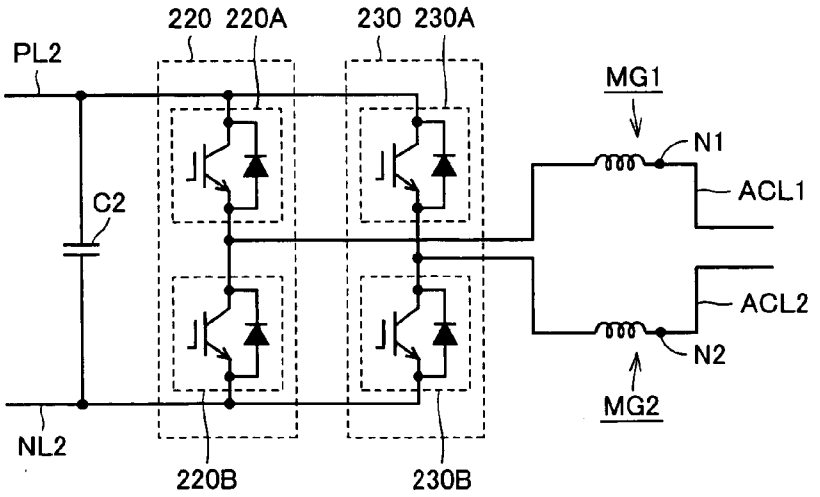
220 220A
230 230A
PL2
MG1
N1
ACL1
C2
ACL2
N2
MG2
NL2
220B
230B

FIG.8

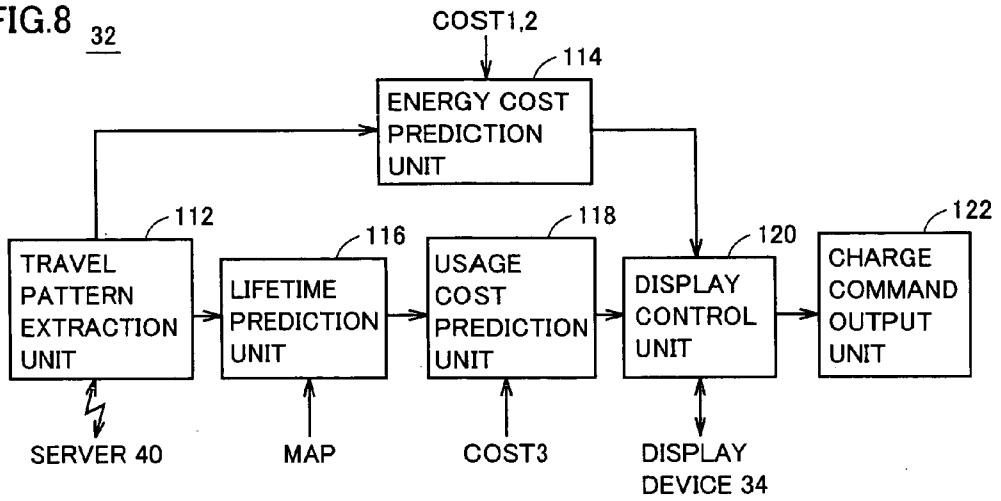

FIG.9

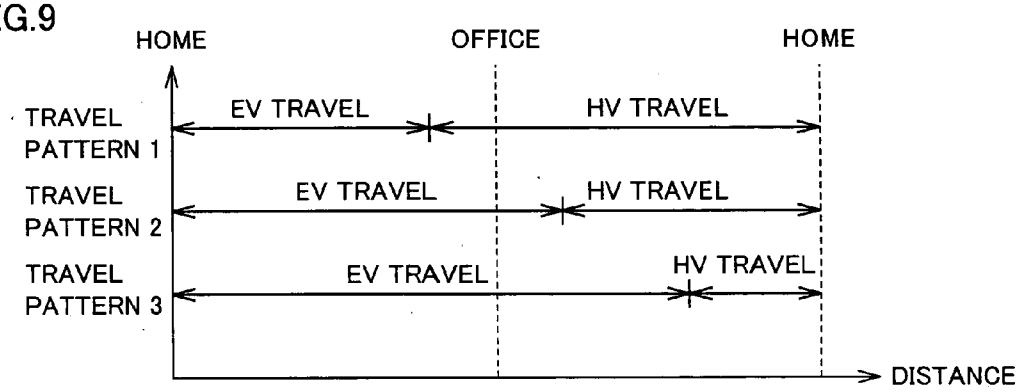

FIG.10

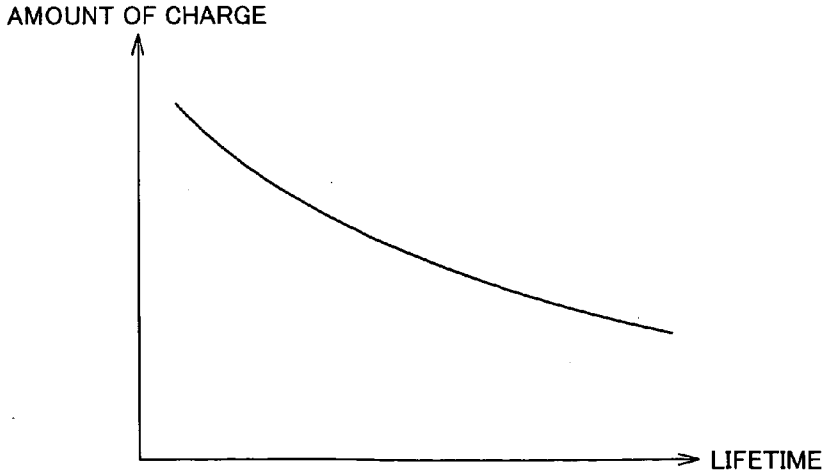

FIG.11

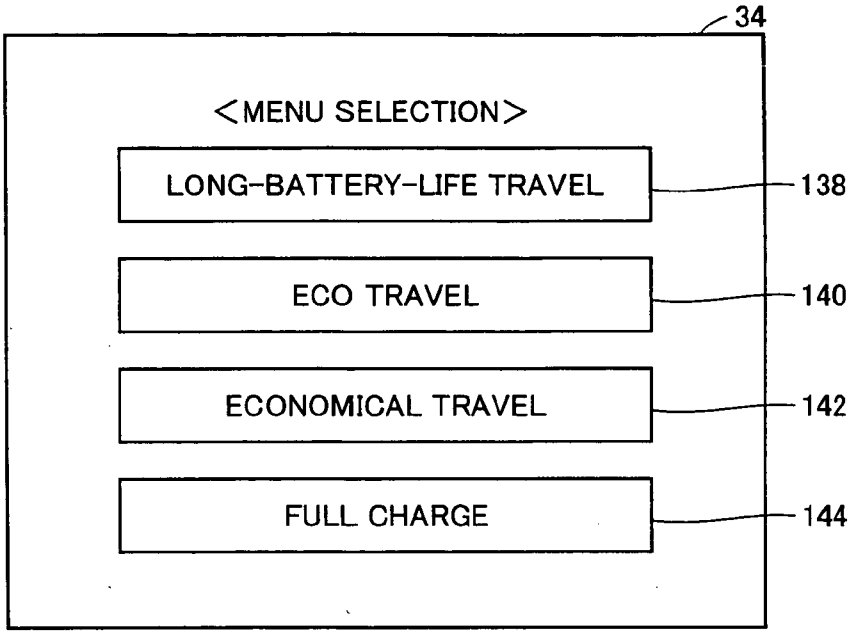
34
<MENU SELECTION>
LONG-BATTERY-LIFE TRAVEL
138
ECO TRAVEL
140
ECONOMICAL TRAVEL
142
FULL CHARGE
144

FIG.12

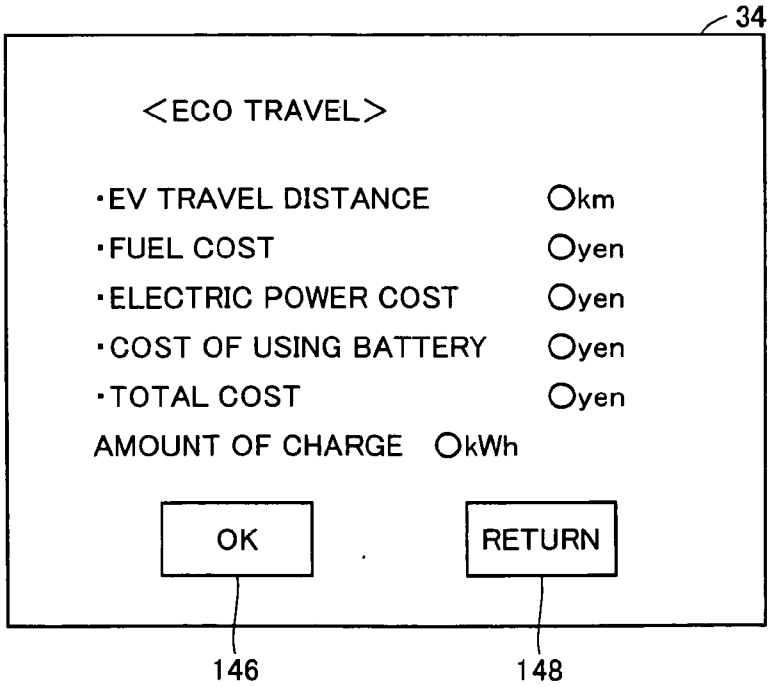
34
<ECO TRAVEL>
·EV TRAVEL DISTANCE Okm
·FUEL COST Oyen
·ELECTRIC POWER COST Oyen
·COST OF USING BATTERY Oyen
·TOTAL COST Oyen
AMOUNT OF CHARGE OkWh
OK
RETURN
146
148

FIG.13

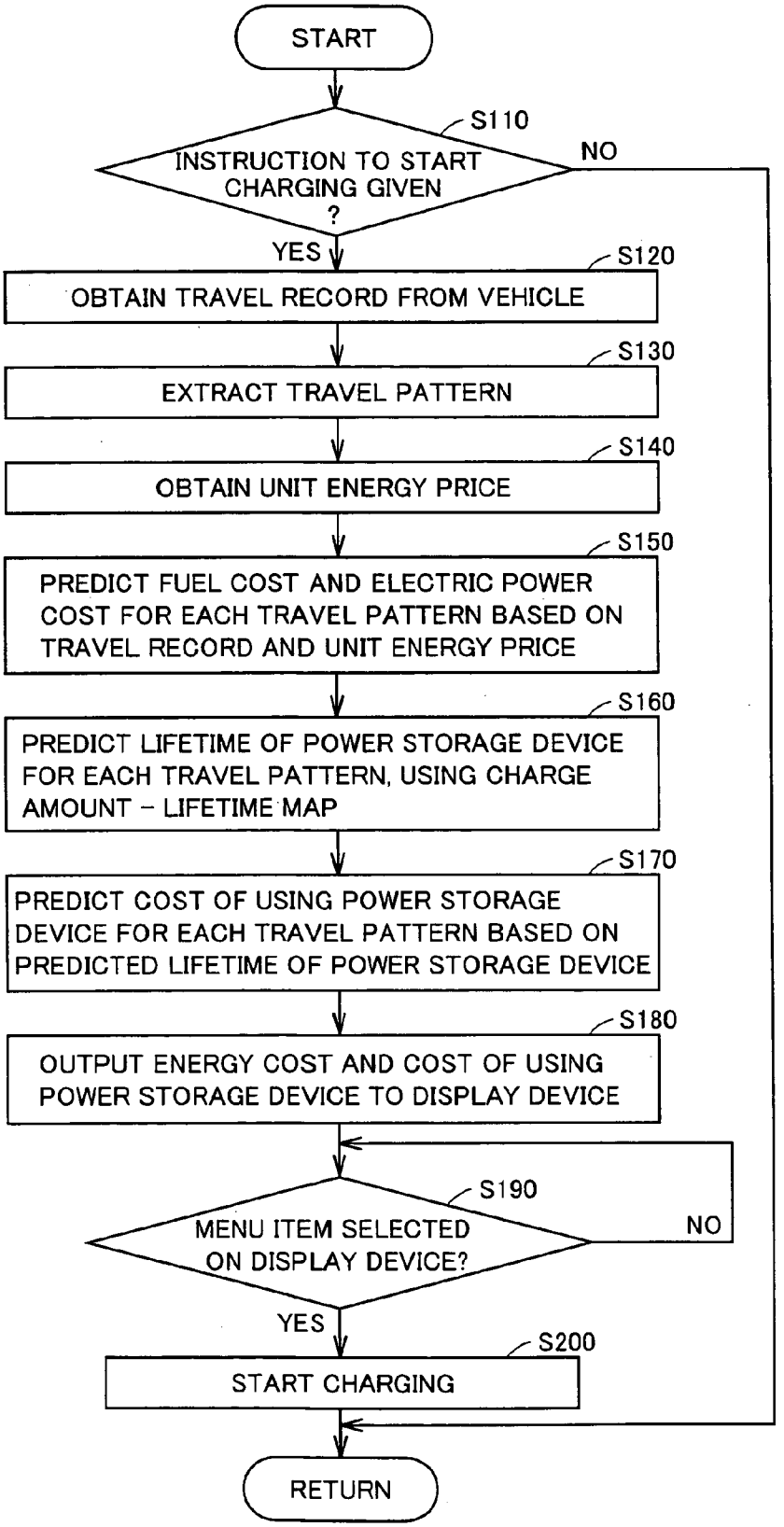
START
S110
INSTRUCTION TO START CHARGING GIVEN ?
NO
YES
S120
OBTAIN TRAVEL RECORD FROM VEHICLE
S130
EXTRACT TRAVEL PATTERN
S140
OBTAIN UNIT ENERGY PRICE
S150
PREDICT FUEL COST AND ELECTRIC POWER COST FOR EACH TRAVEL PATTERN BASED ON TRAVEL RECORD AND UNIT ENERGY PRICE
S160
PREDICT LIFETIME OF POWER STORAGE DEVICE FOR EACH TRAVEL PATTERN, USING CHARGE AMOUNT – LIFETIME MAP
S170
PREDICT COST OF USING POWER STORAGE DEVICE FOR EACH TRAVEL PATTERN BASED ON PREDICTED LIFETIME OF POWER STORAGE DEVICE
S180
OUTPUT ENERGY COST AND COST OF USING POWER STORAGE DEVICE TO DISPLAY DEVICE
S190
MENU ITEM SELECTED ON DISPLAY DEVICE?
NO
YES
S200
START CHARGING
RETURN

FIG.14

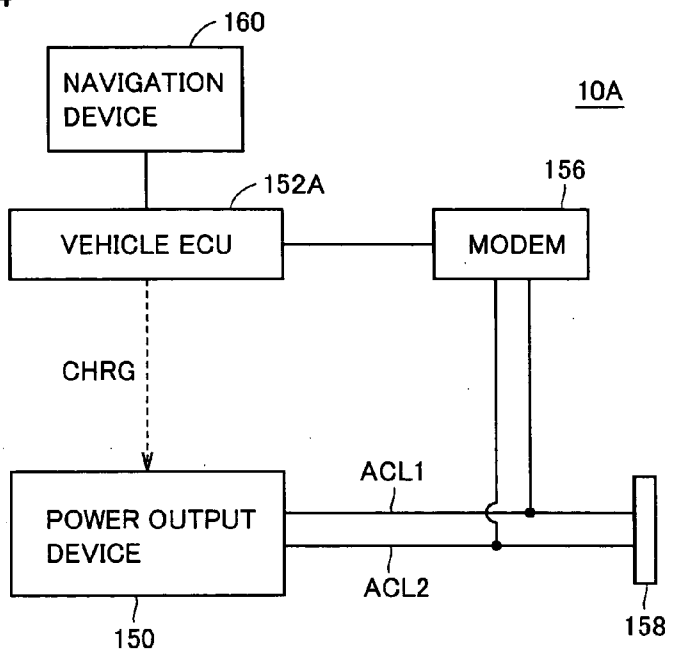
160
NAVIGATION DEVICE
10A
152A
156
VEHICLE ECU
MODEM
CHRG
ACL1
POWER OUTPUT DEVICE
ACL2
150
158

FIG.15

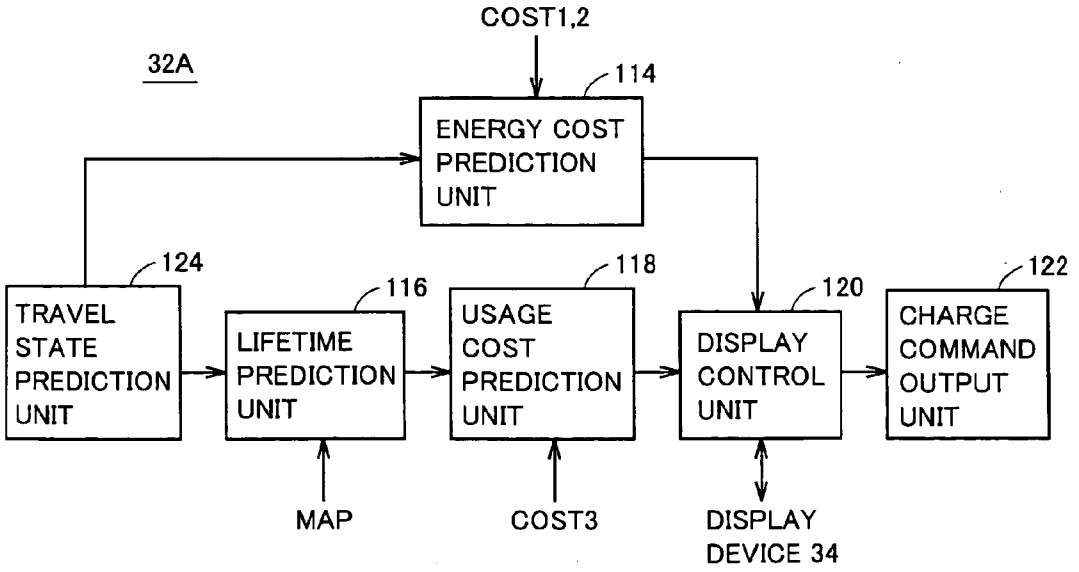
COST1,2
32A
114
ENERGY COST PREDICTION UNIT
124
116
118
120
122
TRAVEL STATE PREDICTION UNIT
LIFETIME PREDICTION UNIT
USAGE COST PREDICTION UNIT
DISPLAY CONTROL UNIT
CHARGE COMMAND OUTPUT UNIT
MAP
COST3
DISPLAY DEVICE 34

FIG.16

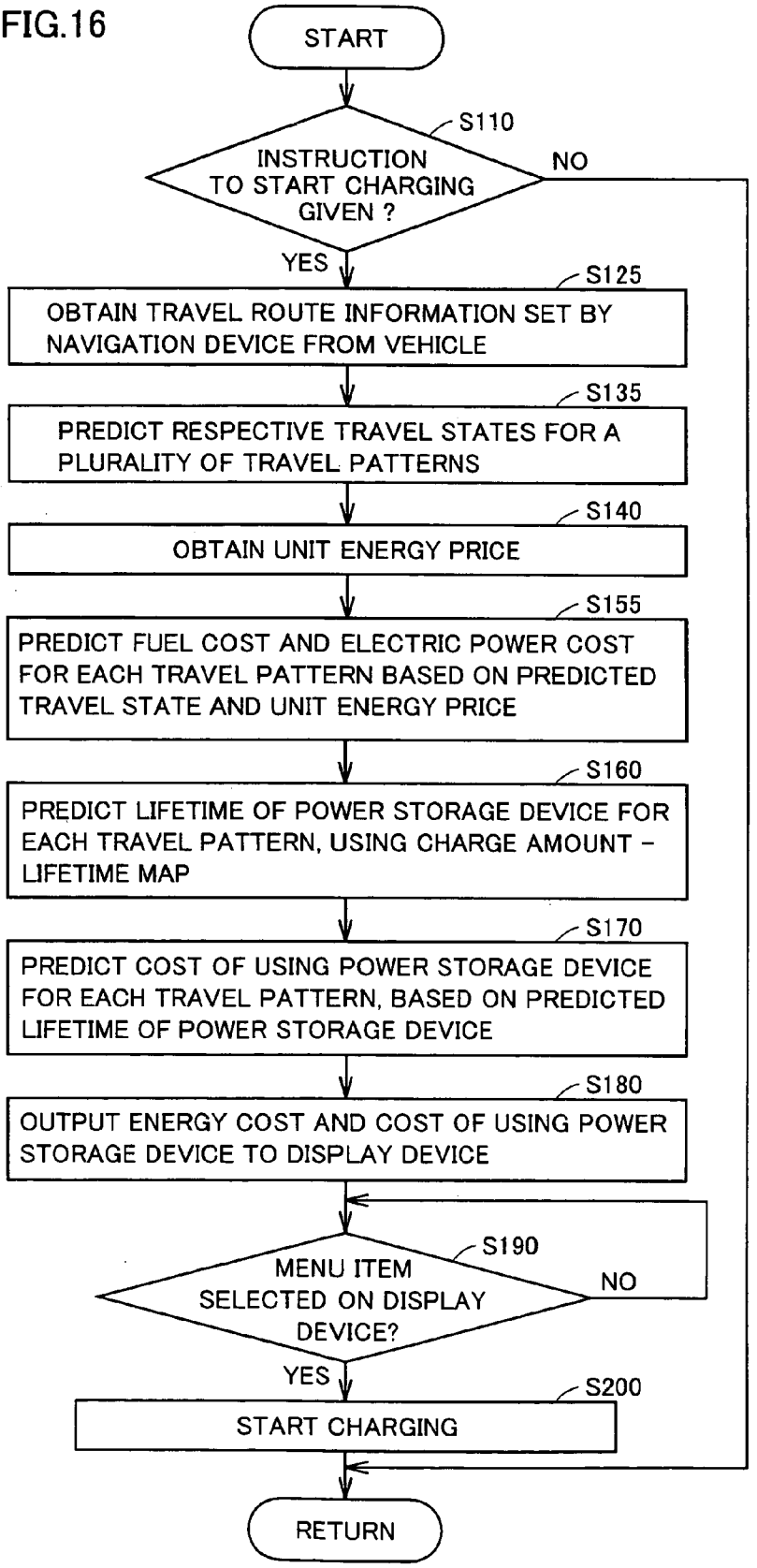
START
S110
INSTRUCTION TO START CHARGING GIVEN ?
NO
YES
S125
OBTAIN TRAVEL ROUTE INFORMATION SET BY NAVIGATION DEVICE FROM VEHICLE
S135
PREDICT RESPECTIVE TRAVEL STATES FOR A PLURALITY OF TRAVEL PATTERNS
S140
OBTAIN UNIT ENERGY PRICE
S155
PREDICT FUEL COST AND ELECTRIC POWER COST FOR EACH TRAVEL PATTERN BASED ON PREDICTED TRAVEL STATE AND UNIT ENERGY PRICE
S160
PREDICT LIFETIME OF POWER STORAGE DEVICE FOR EACH TRAVEL PATTERN, USING CHARGE AMOUNT - LIFETIME MAP
S170
PREDICT COST OF USING POWER STORAGE DEVICE FOR EACH TRAVEL PATTERN, BASED ON PREDICTED LIFETIME OF POWER STORAGE DEVICE
S180
OUTPUT ENERGY COST AND COST OF USING POWER STORAGE DEVICE TO DISPLAY DEVICE
S190
MENU ITEM SELECTED ON DISPLAY DEVICE?
NO
YES
S200
START CHARGING
RETURN

FIG.17

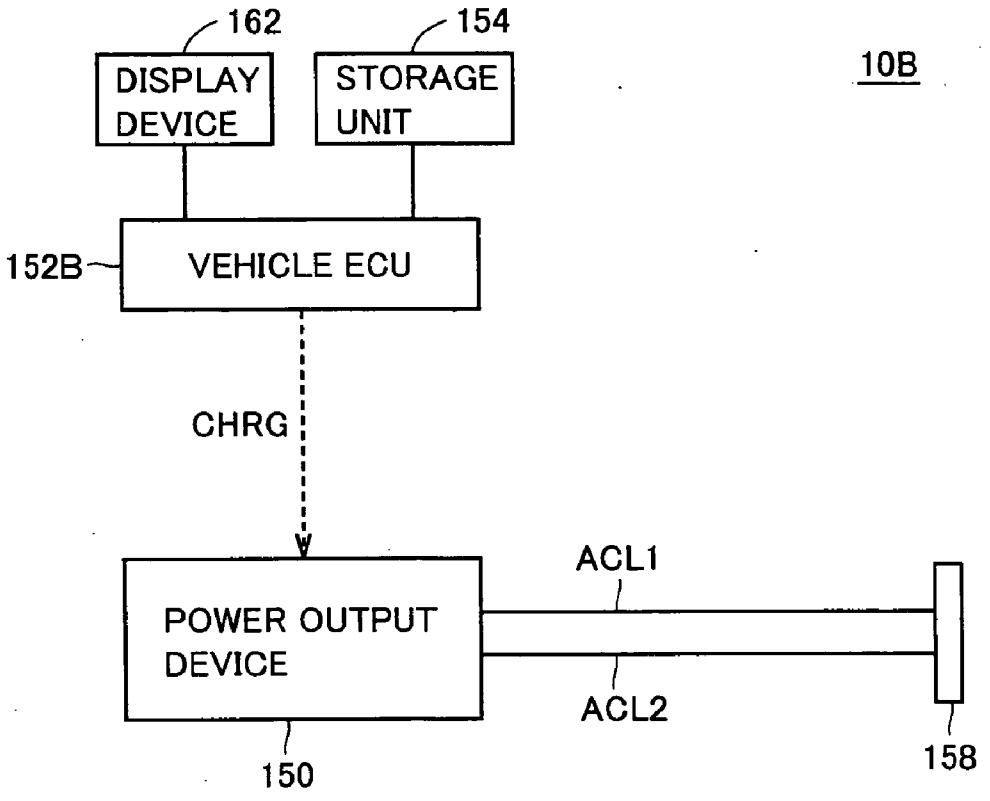
162
154
DISPLAY DEVICE
STORAGE UNIT
10B
152B
VEHICLE ECU
CHRG
ACL1
POWER OUTPUT DEVICE
ACL2
150
158

FIG.18

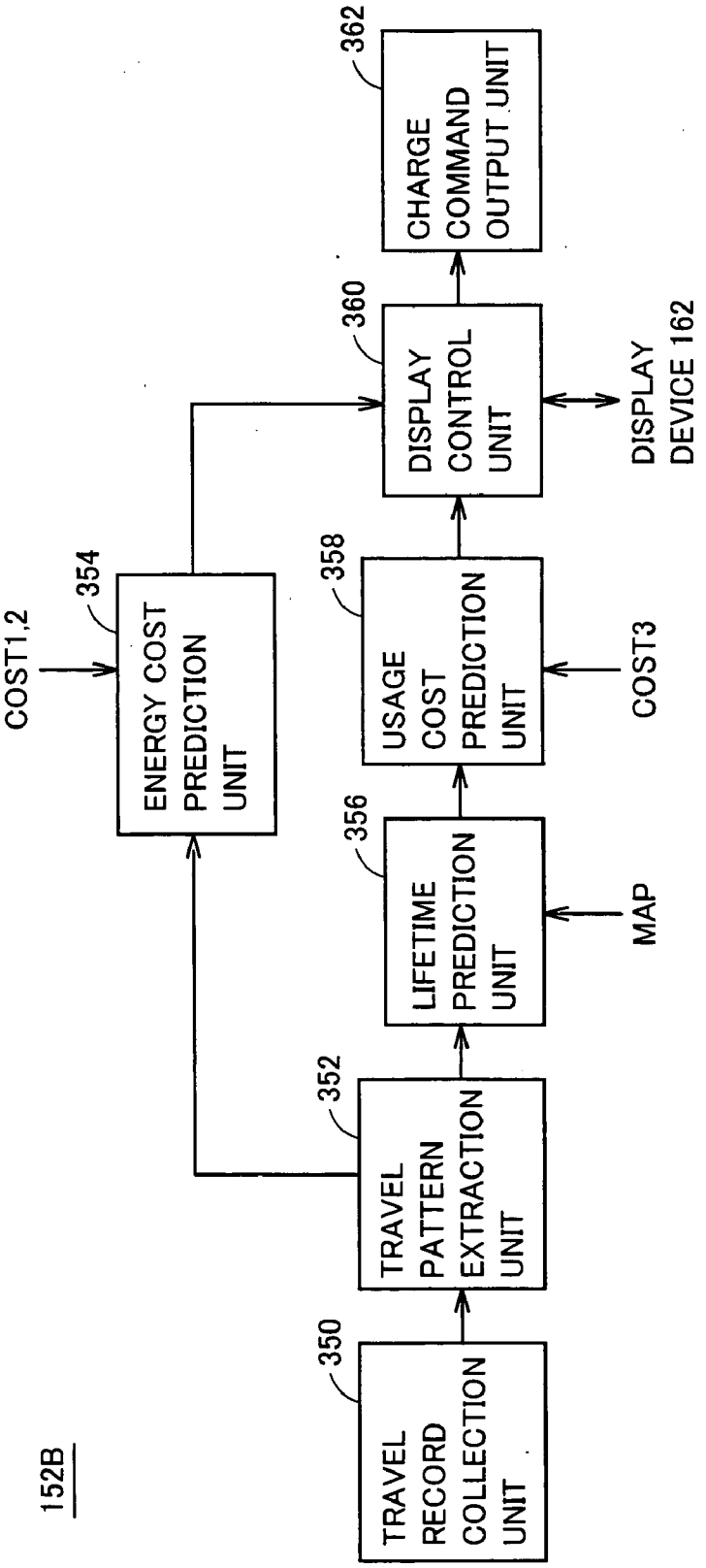
152B
TRAVEL RECORD COLLECTION UNIT
350
TRAVEL PATTERN EXTRACTION UNIT
352
ENERGY COST PREDICTION UNIT
354
COST1,2
LIFETIME PREDICTION UNIT
356
MAP
USAGE COST PREDICTION UNIT
358
COST3
DISPLAY CONTROL UNIT
360
DISPLAY DEVICE 162
CHARGE COMMAND OUTPUT UNIT
362

FIG.19

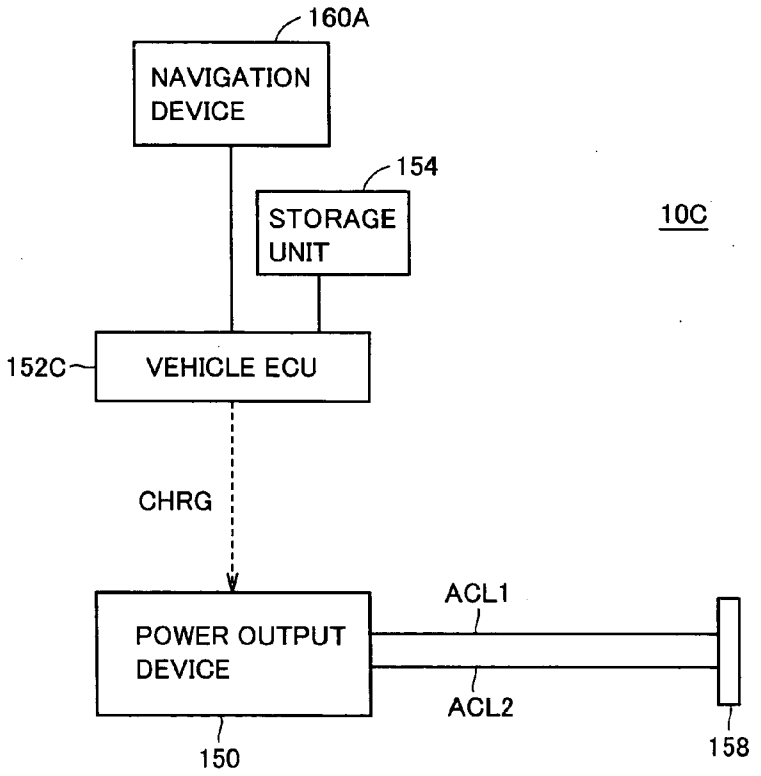
160A
NAVIGATION DEVICE
154
STORAGE UNIT
10C
152C
VEHICLE ECU
CHRG
ACL1
POWER OUTPUT DEVICE
ACL2
150
158

FIG.20

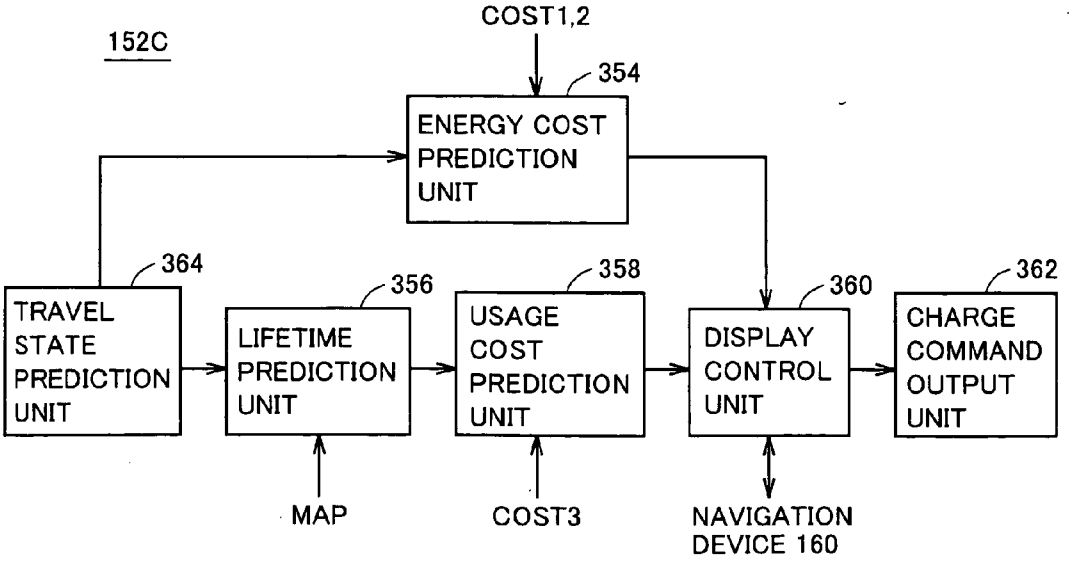
152C
COST1,2
354
ENERGY COST PREDICTION UNIT
364
TRAVEL STATE PREDICTION UNIT
356
LIFETIME PREDICTION UNIT
358
USAGE COST PREDICTION UNIT
360
DISPLAY CONTROL UNIT
362
CHARGE COMMAND OUTPUT UNIT
MAP
COST3
NAVIGATION DEVICE 160

CHARGING CONTROL APPARATUS FOR ELECTRICALLY POWERED VEHICLE, ELECTRICALLY POWERED VEHICLE, METHOD FOR CHARGING CONTROL FOR ELECTRICALLY POWERED VEHICLE, AND COMPUTER-READABLE RECORDED MEDIUM HAVING PROGRAM RECORDED THEREON FOR COMPUTER TO EXECUTE THE CHARGING CONTROL

TECHNICAL FIELD

[0001] The present invention relates to charging control for an electrically powered vehicle configured in such a manner that a power storage device mounted on the vehicle is chargeable from a power supply located outside the vehicle.

BACKGROUND ART

[0002] In recent years, the hybrid vehicle has been of interest as an environment-friendly vehicle. The hybrid vehicle is mounted with, in addition to a conventional engine, an electric motor supplied with electric power from a power storage device to generate a drive force for causing the vehicle to travel, and an electrical generator capable of charging the power storage device with electric power generated from an engine output.

[0003] A hybrid vehicle mounted with an electrical generator as described above and configured in such a manner that its power storage device is chargeable from a power supply outside the vehicle, like an electric vehicle without being mounted with an engine, is known (see, for example, Japanese Patent Laying-Open No. 08-037703).

[0004] Regarding the hybrid vehicle chargeable from an external power supply as disclosed in Japanese Patent Laying-Open No. 08-037703, the electrical energy can be supplied directly from the outside of the vehicle, so that the travel distance over which the vehicle can travel using only the motor while stopping the engine increases.

[0005] The amount of charge supplied to the hybrid vehicle from the outside of the vehicle can be increased to reduce the fuel consumption of the engine, so that the vehicle can travel in environment-friendly manner. In terms of the cost, while the fuel cost for the engine decreases, the cost for electric power necessary for charging increases and the load resulting from the charging is exerted on the power storage device to cause the power storage device to further degrade. The cost of using the power storage device therefore relatively increases.

[0006] On the contrary, if the amount of charge from the outside of the vehicle is decreased, the fuel consumption of the engine increases, so that the rate of contribution to the environment protection decreases. In terms of the cost, while the fuel cost for the engine increases, the cost of electric power necessary for charging decreases and the load on the power storage device accordingly decreases. Degradation of the power storage device is thus restrained. The cost of using the power storage device is therefore relatively decreases.

[0007] In order to further promote the prevalence of the electrically powered vehicle such as hybrid vehicle in the future, it is important to consider evaluation in terms of the cost as well as the environment. In particular, for the electrically powered vehicle chargeable from a power supply outside the vehicle, it is important to create a mechanism that can determine the amount of charge to the power storage device from a power supply outside the vehicle, in consideration of the cost of using the power storage device in addition to the energy cost.

DISCLOSURE OF THE INVENTION

[0008] The present invention has been made to solve the above-described problem, and an object of the invention is to provide a charging control apparatus for an electrically powered vehicle as well as an electrically powered vehicle that allow a user to select an amount of charge from a power supply outside the vehicle to a power storage device, in consideration of the cost of using the power storage device together with the energy cost.

[0009] Another object of the present invention is to provide a method for charging control for an electrically powered vehicle that allows a user to select an amount of charge from a power supply outside the vehicle to a power storage device, in consideration of the cost of using the power storage device together with the energy cost, and to provide a computer-readable recording medium having a program recorded thereon for a computer to execute the charging control.

[0010] According to the present invention, a charging control apparatus for an electrically powered vehicle refers to a charging control apparatus for an electrically powered vehicle configured in such a manner that a power storage device mounted on the vehicle is chargeable from a power supply outside the vehicle, and the charging control apparatus includes an energy cost prediction unit, a lifetime prediction unit, a usage cost prediction unit, an information unit, and a charge command generation unit. The energy cost prediction unit predicts an energy cost for a next travel of the vehicle based on an energy consumption during a travel of the vehicle. The lifetime prediction unit predicts a lifetime of the power storage device according to an amount of charge to the power storage device, using a relation between an amount of charge to the power storage device and a lifetime of the power storage device. The usage cost prediction unit predicts a cost of using the power storage device according to the amount of charge to the power storage device, based on the lifetime of the power storage device predicted by the lifetime prediction unit. The information unit informs a user of the energy cost and the cost of using the power storage device in association with the amount of charge to the power storage device. The charge command generation unit generates a command to charge the power storage device from the power supply outside the vehicle in accordance with an instruction from the user.

[0011] Preferably, the electrically powered vehicle includes an internal combustion engine, an electric power generation device, the power storage device, an electric motor, a travel record collection unit, and a charging device. The electric power generation device is configured to be able to generate electric power using an output of the internal combustion engine. The power storage device is capable of storing the electric power generated by the electric power generation device. The electric motor generates a drive force for causing the vehicle to travel, from the electric power received from the power storage device. The travel record collection unit collects and stores a travel record during a travel of the vehicle. The charging device is configured to be able to charge the power storage device with electric power received from the power supply outside the vehicle. The energy cost prediction unit calculates a fuel consumption of the internal combustion engine and an electric power con-

sumption of the power storage device based on the travel record collected by the travel record collection unit, and predicts a fuel cost and an electric power cost for the next travel based on the calculated fuel consumption and the calculated electric power consumption. The lifetime prediction unit predicts the lifetime of the power storage device using the calculated electric power consumption of the power storage device as the amount of charge with which the power storage device is charged by the charging device.

[0012] Still preferably, the electrically powered vehicle includes an internal combustion engine, an electric power generation device, the power storage device, an electric motor, a navigation device, and a charging device. The electric power generation device is configured to be able to generate electric power using an output of the internal combustion engine. The power storage device is capable of storing the electric power generated by the electric power generation device. The electric motor generates a drive force for causing the vehicle to travel, from the electric power received from the power storage device. The navigation device is capable of setting a travel route. The charging device is configured to be able to charge the power storage device with electric power received from the power supply outside the vehicle. The energy cost prediction unit calculates a fuel consumption of the internal combustion engine and an electric power consumption of the power storage device based on the travel route set by the navigation device, and predicts a fuel cost and an electric power cost for the next travel based on the calculated fuel consumption and the calculated electric power consumption. The lifetime prediction unit predicts the lifetime of the power storage device using the calculated electric power consumption of the power storage device as the amount of charge with which the power storage device is charged by the charging device.

[0013] Preferably, the electrically powered vehicle further includes a travel mode control unit. The travel mode control unit controls switching of a travel mode including a first mode where a target of a state amount (SOC) indicating a state of charge of the power storage device is not set and a second mode where the target of the state amount (SOC) is set.

[0014] More preferably, the travel mode control unit sets the travel mode to the first mode after completion of charging of the power storage device by the charging device, switches the travel mode to the second mode when the state amount (SOC) decreases to approach a specified value indicating the target of the state amount (SOC), and thereafter controls electric power generation by the electric power generation device in such a manner that the state amount (SOC) is around the specified value.

[0015] Further, according to the present invention, an electrically powered vehicle includes a chargeable and dischargeable power storage device, an electric motor, a charging device, an energy cost prediction unit, a lifetime prediction unit, a usage cost prediction unit, an information unit, and a charging control unit. The electric motor generates a drive force for causing the vehicle to travel, from electric power received from the power storage device. The charging device is configured to be able to charge the power storage device with electric power received from a power supply outside the vehicle. The energy cost prediction unit predicts an energy cost for a next travel of the vehicle based on an energy consumption during a travel of the vehicle. The lifetime prediction unit predicts a lifetime of the power storage device according to an amount of charge to the power storage device, using a relation between an amount of charge to the power storage device and a lifetime of the power storage device. The usage cost prediction unit predicts a cost of using the power storage device according to the amount of charge to the power storage device, based on the lifetime of the power storage device predicted by the lifetime prediction unit. The information unit informs a user of the energy cost and the cost of using the power storage device in association with the amount of charge to the power storage device. The charging control unit controls charging to the power storage device from the power supply outside the vehicle by the charging device in accordance with an instruction from the user.

[0016] Preferably, the electrically powered vehicle further includes an internal combustion engine, an electric power generation device and a travel record collection unit. The electric power generation device is configured to be able to generate electric power using an output of the internal combustion engine. The travel record collection unit collects and stores a travel record during a travel of the vehicle. The power storage device is able to store the electric power generated by the electric power generation device. The energy cost prediction unit calculates a fuel consumption of the internal combustion engine and an electric power consumption of the power storage device based on the travel record collected by the travel record collection unit, and predicts a fuel cost and an electric power cost for the next travel based on the calculated fuel consumption and the calculated electric power consumption. The lifetime prediction unit predicts the lifetime of the power storage device using the calculated electric power consumption of the power storage device as the amount of charge with which the power storage device is charged by the charging device.

[0017] Still preferably, the electrically powered vehicle further includes an internal combustion engine, an electric power generation device and a navigation device. The electric power generation device is configured to be able to generate electric power using an output of the internal combustion engine. The navigation device is capable of setting a travel route. The power storage device is able to store the electric power generated by the electric power generation device. The energy cost prediction unit calculates a fuel consumption of the internal combustion engine and an electric power consumption of the power storage device based on the travel route set by the navigation device, and predicts a fuel cost and an electric power cost for the next travel based on the calculated fuel consumption and the calculated electric power consumption. The lifetime prediction unit predicts the lifetime of the power storage device using the calculated electric power consumption of the power storage device as the amount of charge with which the power storage device is charged by the charging device.

[0018] Preferably, the electrically powered vehicle further includes a travel mode control unit. The travel mode control unit controls switching of a travel mode including a first mode where a target of a state amount (SOC) indicating a state of charge of the power storage device is not set and a second mode where the target of the state amount (SOC) is set.

[0019] More preferably, the travel mode control unit sets the travel mode to the first mode after completion of charging of the power storage device by the charging device, switches the travel mode to the second mode when the state amount (SOC) decreases to approach a specified value indicating the target of the state amount (SOC), and thereafter controls

electric power generation by the electric power generation device in such a manner that the state amount (SOC) is around the specified value.

[0020] Further, according to the present invention, a method for charging control for an electrically powered vehicle refers to a method of charging control for an electrically powered vehicle configured in such a manner that a power storage device mounted on the vehicle is chargeable from a power supply outside the vehicle, including the steps of: predicting an energy cost for a next travel of the vehicle based on an energy consumption during a travel of the vehicle; predicting a lifetime of the power storage device according to an amount of charge to the power storage device, using a relation between an amount of charge to the power storage device and a lifetime of the power storage device; predicting a cost of using the power storage device according to the amount of charge to the power storage device, based on the predicted lifetime of the power storage device; informing a user of the energy cost and the cost of using the power storage device in association with the amount of charge to the power storage device; and generating a command to charge the power storage device from the power supply outside the vehicle in accordance with an instruction from the user.

[0021] Preferably, the method for charging control for an electrically powered vehicle further includes the step of collecting a travel record during a travel of the electrically powered vehicle. The electrically powered vehicle includes an internal combustion engine, an electric power generation device, a power storage device, an electric motor, and a charging device. The electric power generation device is configured to be able to generate electric power using an output of the internal combustion engine. The power storage device is capable of storing the electric power generated by the electric power generation device. The electric motor generates a drive force for causing the vehicle to travel, from the electric power received from the power storage device. The charging device is configured to be able to charge the power storage device with electric power received from the power supply outside the vehicle. In the step of predicting an energy cost, a fuel consumption of the internal combustion engine and an electric power consumption of the power storage device are calculated based on the travel record collected in the step of collecting a travel record, and a fuel cost and an electric power cost for the next travel are predicted based on the calculated fuel consumption and the calculated electric power consumption. In the step of predicting a lifetime of the power storage device, the lifetime of the power storage device is predicted using the calculated electric power consumption of the power storage device as the amount of charge with which the power storage device is charged by the charging device.

[0022] Further, preferably the electrically powered vehicle includes an internal combustion engine, an electric power generation device, a power storage device, an electric motor, a navigation device, and a charging device. The electric power generation device is configured to be able to generate electric power using an output of the internal combustion engine. The power storage device is capable of storing the electric power generated by the electric power generation device. The electric motor generates a drive force for causing the vehicle to travel, from the electric power received from the power storage device. The navigation device is capable of setting a travel route. The charging device is configured to be able to charge the power storage device with electric power received from the power supply outside the vehicle. In the step of predicting an energy cost, a fuel consumption of the internal combustion engine and an electric power consumption of the power storage device are calculated based on the travel route set by the navigation device, and a fuel cost and an electric power cost for the next travel are predicted based on the calculated fuel consumption and the calculated electric power consumption. In the step of predicting a lifetime of the power storage device, the lifetime of the power storage device is predicted using the calculated electric power consumption of the power storage device as the amount of charge with which the power storage device is charged by the charging device.

[0023] Further, according to the present invention, a recording medium refers to a computer-readable recording medium having a program recorded thereon for a computer to execute any charging control for an electrically powered vehicle as described above.

[0024] According to the present invention, the energy cost for the next travel is predicted based on the energy consumption during a travel. Further, the relation between the amount of charge to the power storage device and the lifetime of the power storage device is used to predict the lifetime of the power storage device according to the amount of charge to the power storage device. Based on the predicted lifetime of the power storage device, the cost of using the power storage device according to the amount of charge to the power storage device is predicted. The user is informed of the energy cost and the cost of using the power storage device in association with the amount of charge to the power storage device. Following an instruction from the user, a command is issued to charge the power storage device from a power supply outside the vehicle.

[0025] The present invention thus allows a user to select an amount of charge to be supplied from a power supply outside the vehicle to the power storage device in consideration of the cost of using the power storage device together with the energy cost.

BRIEF DESCRIPTION OF THE DRAWINGS

[0026] FIG. **1** is an overall view of a charging control system according to a first embodiment of the present invention.

[0027] FIG. **2** is a schematic configuration diagram of a vehicle shown in FIG. **1**.

[0028] FIG. **3** is a schematic configuration diagram of a power output device shown in FIG. **2**.

[0029] FIG. **4** is a diagram illustrating a relation between the SOC of a power storage device and the travel mode.

[0030] FIG. **5** is a functional block diagram of an MG-ECU shown in FIG. **3**.

[0031] FIG. **6** is a flowchart regarding collection of travel records of the vehicle shown in FIG. **1**.

[0032] FIG. **7** is a diagram showing a zero-phase equivalent circuit of inverters and motor generators shown in FIG. **3**.

[0033] FIG. **8** is a functional block diagram of a charge ECU shown in FIG. **1**.

[0034] FIG. **9** is a diagram showing exemplary travel patterns extracted by a travel pattern extraction unit.

[0035] FIG. **10** is a diagram showing an exemplary relation between the amount of charge to a power storage device and the lifetime of the power storage device.

[0036] FIG. **11** is a diagram showing an exemplary menu selection screen of a display device.

[0037] FIG. **12** is a diagram showing an exemplary cost display screen of a display device.

[0038] FIG. **13** is a flowchart illustrating a control structure of the charge ECU shown in FIG. **1**.

[0039] FIG. **14** is a schematic configuration diagram of a vehicle in a second embodiment.

[0040] FIG. **15** is a functional block diagram of a charge ECU in the second embodiment.

[0041] FIG. **16** is a flowchart illustrating a control structure of the charge ECU in the second embodiment.

[0042] FIG. **17** is a schematic configuration diagram of a vehicle in a third embodiment.

[0043] FIG. **18** is a functional block diagram of a vehicle ECU shown in FIG. **17**.

[0044] FIG. **19** is a schematic configuration diagram of a vehicle in a fourth embodiment.

[0045] FIG. **20** is a functional block diagram of a vehicle ECU shown in FIG. **19**.

BEST MODES FOR CARRYING OUT THE INVENTION

[0046] In the following, embodiments of the present invention will be described in detail with reference to the drawings. In the drawings, like or corresponding components are denoted by like reference characters and a description thereof will not be repeated.

First Embodiment

[0047] FIG. **1** is an overall view of a charging control system according to a first embodiment of the present invention. Referring to FIG. **1**, charging control system **100** includes a vehicle **10**, a charging station **30** and a server **40**.

[0048] Vehicle **10** refers to an electrically-powered vehicle configured in such a manner that a power storage device (not shown) mounted on the vehicle is chargeable from a power supply located outside the vehicle, specifically a hybrid vehicle mounted with an electric motor for causing the vehicle to travel, in addition to an engine. Vehicle **10** can be connected to charging station **30** by a connection cable **20**, and receives a charging electric power via connection cable **20** from charging station **30**. Vehicle **10** also collects and stores travel records during a travel of the vehicle, and outputs the collected travel records via connection cable **20** to charging station **30**, before the power storage device is charged from charging station **30**.

[0049] Connection cable **20** is an electric power line used for supplying a charging electric power from charging station **30** to vehicle **10**. Connection cable **20** is also used as a communication medium for communication to be performed between charging station **30** and vehicle **10**.

[0050] Charging station **30** is a facility used for supplying a charging electric power to the power storage device of vehicle **10** connected to the station by connection cable **20**. Charging station **30** receives for example a system electric power to supply the power to vehicle **10** via connection cable **20**.

[0051] Charging station **30** includes a charge ECU (Electronic Control Unit) **32** and a display device **34**. Charge ECU **32** predicts, for each of a plurality of travel patterns extracted from the travel records of vehicle **10**, the energy cost (fuel cost and electric power cost) for the next travel of vehicle **10**. Charge ECU **32** also predicts, for each of the above-described travel patterns, the lifetime of the power storage device (the remaining number of times the power storage device can be charged, for example) according to the amount of charge to the power storage device of vehicle **10**, and predicts the cost of using the power storage device according to the amount of charge to the power storage device, based on the predicted lifetime. The configuration of charge ECU **32** will be described in detail hereinlater.

[0052] Display device **34** presents, for each of a plurality of travel patterns, the energy cost for the next travel and the cost of using the power storage device that are predicted by charge ECU **32**, in association with the amount of charge from charging station **30** to vehicle **10**. Display device **34** is configured in such a manner that a user can enter selection of an item based on what is presented on the display. The user can select a desired travel pattern (amount of charge) from display device **34**, based on the travel cost and the amount of charge from charging station **30** to vehicle **10**, presented for each of a plurality of travel patterns.

[0053] When the user selects a travel pattern (amount of charge) from display device **34**, charge ECU **32** outputs a charge command to vehicle **10** via connection cable **20**, so that the power storage device of vehicle **10** is charged from charging station **30** with the amount of charge associated with the selected travel pattern.

[0054] Server **40** has various data used for performing a predictive calculation, by charge ECU **32**, of the energy cost of vehicle **10** and the cost of using the power storage device, and outputs data necessary for the calculation in response to a request from charge ECU **32**. Specifically, server **40** has data such as unit energy price (unit fuel price, unit electric power price) used for calculating the energy cost of vehicle **10**, a charge amount—lifetime map used for predicting the lifetime of the power storage device, and the cost of replacement of the power storage device (the price of the power storage device and the cost required for replacement of the power storage device).

[0055] <Vehicle Configuration>

[0056] FIG. **2** is a schematic configuration diagram of vehicle **10** shown in FIG. **1**. Referring to FIG. **2**, vehicle **10** includes a power output device **150**, a vehicle ECU **152**, a storage unit **154**, a modem **156**, electric power lines ACL**1**, ACL**2**, and a connector **158**. Electric power lines ACL**1**, ACL**2** correspond to connection cable **20** shown in FIG. **1**.

[0057] Power output device **150** outputs a drive force for the vehicle. When signal CHRG is activated that represents an instruction to charge the power storage device (not shown) with electric power that is input from connector **158**, power output device **150** converts the electric power supplied via electric power lines ACL**1**, ACL**2** into a voltage level of the power storage device to charge the power storage device. The configuration of power output device **150** will be described hereinlater.

[0058] Vehicle ECU **152** inactivates signal CHRG that is to be output to power output device **150**, when connector **158** is not connected to charging station **30** (FIG. **1**) and the vehicle can travel. Vehicle ECU **152** collects travel records during a travel of the vehicle, and outputs the collected travel records to storage unit **154**. When connector **158** is connected to charging station **30**, vehicle ECU **152** reads the collected travel records from storage unit **154**, and uses modem **156** to output the travel records to charging station **30** via electric power lines ACL**1**, ACL**2**.

[0059] Vehicle ECU **152** activates signal CHRG when receives a charge command from charging station **30** via modem **156**. Vehicle ECU **152** inactivates signal CHRG when the power storage device has been charged by the charge amount indicated by the charge command.

[0060] Storage unit **154** is a nonvolatile memory storing travel records collected during the travel of the vehicle. Modem **156** is a communication interface for performing data communication between charge ECU **32** (FIG. **1**) of charging station **30** and vehicle ECU **152** via electric power lines ACL**1**, ACL**2**. Connector **158** is an external charge interface for receiving the charging electric power supplied from charging station **30**.

[0061] FIG. **3** is a schematic configuration diagram of power output device **150** shown in FIG. **2**. Referring to FIG. **3**, power output device **150** includes an engine **204**, a fuel tank **205**, a fuel sensor **206**, motor generators MG**1**, MG**2**, a power split device **203**, and a wheel **202**. Power output device **150** also includes a power storage device B, a voltage step-up converter **210**, inverters **220**, **230**, an MG-ECU **240**, capacitors C**1**, C**2**, positive lines PL**1**, PL**2**, and negative lines NL**1**, NL**2**. Power output device **150** further includes a voltage sensor **252**, a current sensor **254** and a temperature sensor **256**.

[0062] Power split device **203** is coupled to engine **204** and motor generators MG**1**,

[0063] MG**2** to split the power between the engine and motor generators. For example, a planetary gear set having three rotational shafts of a sun gear, a planetary carrier and a ring gear may be used as power split device **203**.

[0064] The kinetic energy generated by engine **204** is distributed by power split device **203** to wheel **202** and motor generator MG**1**. Engine **204** is incorporated in power output device **150** to serve as a power source for driving wheel **202** and driving motor generator MG**1**. Motor generator MG**1** is incorporated in power output device **150** to operate as an electrical generator driven by engine **204** and to operate as an electric motor capable of starting engine **204**, while motor generator MG**2** is incorporated in power output device **150** to serve as a power source for driving wheel **202**.

[0065] Motor generators MG**1**, MG**2** each include Y-connected three-phase coils (not shown) as stator coils. Electric power line ACL**1** is connected to a neutral point N**1** of the three-phase coils of motor generator MG**1**, and electric power line ACL**2** is connected to a neutral point N**2** of the three-phase coils of motor generator MG**2**.

[0066] Power storage device B is a chargeable DC power source and configured for example with a secondary battery such as nickel-metal-hydride or lithium-ion battery. A large-capacity capacitor may also be employed as power storage device B. As long as the power storage device is an electric power buffer capable of temporarily storing the electric power generated by motor generators MG**1**, MG**2** and the electric power supplied from charging station **30** (FIG. **1**) and supplying the stored electric power to motor generator MG**2**, the power storage device is not limited to a particular one.

[0067] Capacitor C**1** smoothes a voltage variation between positive line PL**1** and negative line NL**1**. Based on signal PWC from MG-ECU **240**, voltage step-up converter **210** steps up the DC voltage supplied from power storage device B, and outputs the stepped up voltage to positive line PL**2**. Further, voltage step-up converter **210** steps down the DC voltage supplied from inverters **220**, **230** via positive line PL**2** to a voltage level of power storage device B so as to charge power storage device B. Voltage step-up converter **210** is configured for example with a voltage step-up-and-down-type chopper circuit. Capacitor C**2** smoothes a voltage variation between positive line PL**2** and negative line NL**2**.

[0068] Inverters **220**, **230** are each configured as a three-phase bridge circuit. Based on signal PWM**1** from MG-ECU **240**, inverter **220** converts the DC voltage supplied from positive line PL**2** into a three-phase AC voltage, and outputs the resultant three-phase AC voltage to motor generator MG**1**. Further, based on signal PWM**1**, inverter **220** converts the electric power generated by motor generator MG**1** from the output of engine **204** into a DC voltage, and outputs the resultant DC voltage to positive line PL**2**.

[0069] Based on signal PWM**2** from MG-ECU **240**, inverter **230** converts the DC voltage supplied from positive line PL**2** into a three-phase AC voltage, and outputs the resultant three-phase AC voltage to motor generator MG**2**. Thus, motor generator MG**2** is driven to generate a specified torque. Further, when the vehicle is braked, inverter **230** receives a rotational force from wheel **202** to convert the three-phase AC voltage generated by motor generator MG**2** into a DC voltage based on signal PWM**2**, and output the resultant DC voltage to positive line PL**2**.

[0070] Further, when power storage device B is charged with the electric power supplied from charging station **30**, inverters **220**, **230** convert the AC power that is supplied to neutral points N**1**, N**2** via electric power lines ACL**1**, ACL**2** into a DC power based on signals PWM**1**, PWM**2**, and output the resultant DC power to positive line PL**2**.

[0071] Motor generators MG**1**, MG**2** are each a three-phase AC electric motor, and configured for example as a three-phase AC synchronous electric motor. Motor generator MG**1** generates a three-phase AC voltage from the kinetic energy generated by engine **204**, and outputs the generated three-phase AC voltage to inverter **220**. Further, motor generator MG**1** generates a drive force using the three-phase AC voltage supplied from inverter **220** to start engine **204**. Motor generator MG**2** generates a drive torque for the vehicle using the three-phase AC voltage supplied from inverter **230**. Further, when the vehicle is braked, motor generator MG**2** generates a three-phase AC voltage to output the voltage to inverter **230**.

[0072] Engine **204** converts the thermal energy generated through combustion of the fuel into kinetic energy for moving elements such as piston and rotor, and outputs the resultant kinetic energy to power split device **203**. Fuel tank **205** stores the fuel supplied from the outside of the vehicle, and supplies the stored fuel to engine **204**. Fuel sensor **206** detects the residual amount of fuel FUEL in fuel tank **205**, and outputs the detected value to vehicle ECU **152** (not shown).

[0073] Voltage sensor **252** detects voltage Vb of power storage device B, and outputs the detected value to vehicle ECU **152**. Current sensor **254** detects current Ib that is input/output to/from power storage device B, and outputs the detected value to vehicle ECU **152**. Temperature sensor **256** detects temperature Tb of power storage device B, and outputs the detected value to vehicle ECU **152**. The detected values are each stored in storage unit **154** (FIG. **2**) as travel records during the travel of the vehicle.

[0074] MG-ECU **240** generates signal PWC for driving voltage step-up converter **210**, and outputs the generated signal PWC to voltage step-up converter **210**. When signal CHRG from vehicle ECU **152** is inactivated, MG-ECU **240** generates signals PWM**1**, PWM**2** for driving motor generators MG**1**, MG**2** respectively, and outputs the generated signals PWM**1**, PWM**2** to inverters **220**, **230** respectively.

[0075] MG-ECU **240** also controls the travel mode of vehicle **10**. Specifically, MG-ECU **240** controls switching between a first travel mode and a second travel mode. The first

travel mode refers to a mode in which the target state of charge (the state of charge is hereinafter also referred to as "SOC" which is indicated by a value of 0 to 100% relative to the full state of charge) of power storage device B is not set, and the second travel mode refers to a mode in which the target SOC is set.

[0076] In the above-described first travel mode, engine **204** stops unless a large drive force for travel is required such as the one required when the vehicle is to be suddenly accelerated or the vehicle is to climb a hill. Therefore, the first travel mode is also referred to as "motor travel mode" or "EV travel mode" hereinafter. In the second travel mode, in order to control the SOC of power storage device B so that the SOC is at the target value, engine **204** operates intermittently or continuously. Therefore, the second travel mode is also referred to as "hybrid travel mode" or "HV travel mode" hereinafter.

[0077] When signal CHRG from vehicle ECU **152** is activated, MG-ECU **240** generates signals PWM**1**, PWM**2** for controlling inverters **220**, **230** respectively, so that the AC power from charging station **30** that is supplied to neutral points N**1**, N**2** via electric power lines ACL**1**, ACL**2** is converted into the DC power to charge power storage device B.

[0078] FIG. **4** is a diagram illustrating a relation between the SOC of power storage device B and the travel mode. Referring to FIG. **4**, it is supposed that a travel of vehicle **10** is started after power storage device B (FIG. **3**) is charged from charging station **30** (FIG. **1**). After the travel is started, until the SOC of power storage device B becomes smaller than a specified value SC (20% for example), the target SOC is not set and vehicle **10** travels in the EV travel mode. Namely, as long as a large drive force for travel is not required such as the one required when the vehicle is to be suddenly accelerated or the vehicle is to climb a hill, vehicle **10** travels with engine **204** stopped. When the vehicle is decelerated or travels downhill, the SOC could be temporarily increased because of the electric power generated by motor generator MG**2**. With respect to the whole travel of the vehicle, however, the SOC decreases as the travel distance increases.

[0079] When the SOC of power storage device B becomes smaller than specified value SC, the travel mode is switched from the EV travel mode to the HV travel mode, and the SOC is controlled within the range defined by a lower limit SL and an upper limit SH. When the SOC becomes smaller than lower limit SL, engine **204** is started, and power storage device B is charged with the electric power generated by motor generator MG**1**. After this, when the SOC becomes larger than specified value SC for example, engine **204** is stopped.

[0080] FIG. **5** is a functional block diagram of MG-ECU **240** shown in FIG. **3**. Referring to FIG. **5**, MG-ECU **240** includes a converter control unit **310**, first and second inverter control units **312**, **318**, a travel mode control unit **314**, and a charging control unit **316**.

[0081] Converter control unit **310** generates a PWM (Pulse Width Modulation) signal for driving voltage step-up converter **210** based on voltage Vb of power storage device B and voltage Vh between positive line PL**2** and negative line NL**2**, and outputs the generated PWM signal as signal PWC to voltage step-up converter **210**.

[0082] First inverter control unit **312** generates a PWM signal for driving motor generator MG**1** based on motor current MCRT**1** and motor rotational angle θ**1** of motor generator MG**1**, voltage Vh, and torque command value TR**1** for motor generator MG**1** from travel mode control unit **314**, and outputs the generated PWM signal as signal PWM**1** to inverter **220**. Here, motor current MCRT**1** and motor rotational angle θ**1** are detected by a sensor (not shown).

[0083] When power storage device B is charged from charging station **30** (FIG. **1**), first inverter control unit **312** generates signal PWM**1** based on zero-phase voltage command value AC**1** from charging control unit **316**, and outputs the generated signal PWM**1** to inverter **220**.

[0084] Second inverter control unit **318** generates a PWM signal for driving motor generator MG**2**, based on torque command value TR**2** for motor generator MG**2**, motor current MCRT**2** and motor rotational angle θ**2** of motor generator MG**2**, and voltage Vh, and outputs the generated PWM signal as signal PWM**2** to inverter **230**. Here, torque command value TR**2** is generated by vehicle ECU **152** (FIG. **2**) for example, based on the accelerator pedal position and the vehicle speed, and motor current MCRT**2** and motor rotational angle **02** are detected by a sensor (not shown).

[0085] When power storage device B is charged from charging station **30**, second inverter control unit **318** generates signal PWM**2** based on zero-phase voltage command value AC**2** from charging control unit **316**, and outputs the generated signal PWM**2** to inverter **230**.

[0086] When travel mode control unit **314** receives from charging control unit **316** charging-completion signal COMP indicating that charging of power storage device B from charging station **30** is completed, travel mode control unit **314** sets the travel mode to the EV travel mode and sets torque command value TR**1** to be output to first inverter control unit **312** to zero.

[0087] When the SOC of power storage device B becomes smaller than specified value SC in the EV travel mode, travel mode control unit **314** switches the travel mode from the EV travel mode to the HV travel mode. When the SOC of power storage device B becomes smaller than lower limit SL, travel mode control unit **314** generates torque command value TR**1** for starting engine **204**, and outputs torque command value TR**1** to first inverter control unit **312**. When engine **204** is started, travel mode control unit **314** generates torque command value TR**1** for generating electric power by motor generator MG**1**, and outputs torque command value TR**1** to first inverter control unit **312**.

[0088] When signal CHRG from vehicle ECU **152** is activated, charging control unit **316** generates zero-phase voltage command values AC**1**, AC**2** for operating motor generators MG**1**, MG**2** and inverters **20**, **30** as a single-phase PWM converter, and outputs the generated zero-phase voltage command values AC**1**, AC**2** to first and second inverter control units **312**, **318** respectively. When signal CHRG is inactivated, charging control unit **316** outputs charging-completion signal COMP to travel mode control unit **314**. A description of zero-phase voltage command values AC**1**, AC**2** will be given hereinlater.

[0089] <Process of Collecting Travel Records>

[0090] FIG. **6** is a flowchart regarding a process of collecting travel records in vehicle **10** shown in FIG. **1**. Here, the process of the flowchart is called from a main routine and executed at regular time intervals or each time a predetermined condition is satisfied. Referring to FIG. **6**, vehicle ECU **152** confirms the travel mode (step S**10**).

[0091] When it is determined that the travel mode is the HV travel mode ("HV" in step S**10**), vehicle ECU **152** collects travel records as HV travel records (step S**20**). Specifically, vehicle ECU **152** collects records in the HV travel mode such

as travel distance and travel time, voltage Vb, current Ib and temperature Tb of power storage device B, and the residual amount of fuel.

[0092] In contrast, when it is determined that the travel mode is the EV travel mode ("EV" in step S**10**), vehicle ECU **152** collects travel records as EV travel records (step S**30**). Specifically, vehicle ECU **152** collects records in the EV travel mode such as the travel distance and travel time, voltage Vb, current Ib, temperature Tb, and the residual amount of fuel.

[0093] Based on the collected record of the residual amount of fuel, vehicle ECU **152** calculates the fuel consumption of engine **204** (step S**40**). Further, based on the collected records of voltage Vb and current Ib of power storage device B, vehicle ECU **152** calculates the electric power consumption of power storage device B (step S**50**). Then, vehicle ECU **152** stores the collected travel records (including the calculated fuel consumption of engine **204** and the calculated electric power consumption of power storage device B) in storage unit **154** (step S**60**). Then, before power storage device B is charged from charging station **30** (FIG. **1**), the travel records stored in storage unit **154** are transmitted to charge ECU **32** (FIG. **1**) of charging station **30** as described hereinlater.

[0094] <Method for Charging Power Storage Device>

[0095] FIG. **7** is a diagram showing a zero-phase equivalent circuit of inverters **220**, **230** and motor generators MG**1**, MG**2**. Referring to FIG. **7**, inverters **220**, **230** are each configured as a three-phase bridge circuit as described above, and there are eight combination patterns of ON and OFF of six transistors in each inverter. Regarding two of the eight switching patterns, the phase-to-phase voltage is zero and this voltage state is referred to as zero voltage vector. In the case of the zero voltage vector, the three switching elements of the upper arm can be regarded as being in the same switching state (all are ON or OFF), and the three switching elements of the lower arm can also be regarded as being the same switching state.

[0096] When power storage device B is charged from charging station **30**, the zero voltage vector is controlled in inverters **220**, **230** based on zero-phase voltage command values AC**1**, AC**2** each generated by charging control unit **316** (FIG. **5**) of MG-ECU **240**. Therefore, when power storage device B is charged from charging station **30**, the three switching elements of the upper arm of each inverter can be regarded as being in the same switching state, and the three switching elements of the lower arm of the inverter can also be regarded as being in the same switching state. Therefore, in FIG. **7**, the three switching elements in the upper arm of inverter **220** are collectively shown as an upper arm **220**A, while the three switching elements in the lower arm of inverter **220** are collectively shown as a lower arm **220**B. Similarly, the three switching elements in the upper arm of inverter **230** are collectively shown as an upper arm **230**A, while the three switching elements in the lower arm of inverter **230** are collectively shown as a lower arm **230**B.

[0097] As shown in FIG. **7**, this zero-phase equivalent circuit can be regarded as a single-phase PWM converter having its input receiving single-phase AC electric power that is supplied to neutral points N**1**, N**2** via electric power lines ACL**1**, ACL**2**. Accordingly, the AC electric power that is input from charging station **30** via electric power lines ACL**1**, ACL**2** can be converted into DC electric power to output the DC electric power to positive line PL**2** and negative line NL**2**, by changing the zero voltage vector for inverters **220**, **230** each and controlling switching of inverters **220**, **230** so that each of the inverters operates as an arm of the single-phase PWM converter.

[0098] <Configuration of Charge ECU>

[0099] FIG. **8** is a functional block diagram of charge ECU **32** shown in FIG. **1**. Referring to FIG. **8**, charge ECU **32** includes a travel pattern extraction unit **112**, an energy cost prediction unit **114**, a lifetime prediction unit **116**, a usage cost prediction unit **118**, a display control unit **120**, and a charge command output unit **122**. Travel pattern extraction unit **112** obtains from vehicle **10** travel records (including the fuel consumption of engine **204** and the electric power consumption of power storage device B) collected in vehicle **10**, and extracts a travel pattern of vehicle **10** based on the obtained travel records.

[0100] FIG. **9** is a diagram showing exemplary travel patterns extracted by travel pattern extraction unit **112**. FIG. **9** shows an exemplary case where three travel patterns are extracted based on travel records collected during daily travel between home and office.

[0101] Referring to FIG. **9**, the EV travel distance of travel pattern **1** is relatively shorter than other travel patterns, while the EV travel distance of travel pattern **3** is relatively longer than other travel patterns. In other words, as for travel pattern **1**, the HV travel distance is relatively longer and accordingly a larger amount of fuel is consumed by engine **204**, and thus the rate of contribution to environmental protection is relatively lower. As for travel pattern **3**, the HV travel distance is relatively shorter and accordingly a smaller amount of fuel is consumed by engine **204**, and thus travel pattern **3** can be regarded as environment-friendly travel pattern.

[0102] In terms of the cost, as for travel pattern **1**, the EV travel distance is relatively shorter and accordingly the electric power consumption of power storage device B is smaller and, as for travel pattern **3**, the EV travel distance is relatively longer and accordingly the electric power consumption of power storage device B is larger. Here, the electric power consumption of power storage device B corresponds to the amount of charge from charging station **30** to power storage device B. Therefore, in travel pattern **1**, the charge cost is relatively lower and the fuel cost is relatively higher and, in travel pattern **3**, the charge cost is relatively higher and the fuel cost is relatively lower. When the amount of charge to power storage device B is larger, a large charge load is exerted on power storage device B, resulting in degradation of power storage device B and shortened lifetime of power storage device B. Thus, the cost of using power storage device B in travel pattern **3** which requires a larger amount of charge is relatively higher than travel pattern **1**.

[0103] In the first embodiment, the energy cost and the cost of using power storage device B are predicted for a plurality of travel patterns each, and a plurality of proposed amounts of charge (travel patterns) are presented to a user to enable the user to select a proposed amount of charge (travel pattern) as desired.

[0104] While FIG. **9** has been described as applied for example to the travel between home and office, a plurality of travel patterns can be extracted based on collected travel records, and a plurality of proposed amounts of charge (travel patterns) can be presented to a user as well, when vehicle **10** is used for other purposes (such as shopping).

[0105] Referring again to FIG. **8**, energy cost prediction unit **114** predicts the energy cost for each travel pattern extracted by travel pattern extraction unit **112**. Specifically,

energy cost prediction unit **114** obtains unit fuel price COST**1** and unit price of the charging electric power COST**2** from server **40**, and predicts the fuel cost by multiplying the fuel consumption of engine **204** by unit fuel price COST**1** and predicts the electric power cost by multiplying the electric power consumption of power storage device B by unit price of the charging electric power COST**2**, for each travel pattern.

[0106] Lifetime prediction unit **116** predicts the lifetime of power storage device B (the remaining number of times the power storage device can be charged for example) for each of the travel patterns extracted by travel pattern extraction unit **112**. Specifically, as the electric power consumption of power storage device B corresponds to the amount of charge from charging station **30** to power storage device B as described above, lifetime prediction unit **116** obtains from server **40** a charge amount—lifetime map MAP showing a relation between the amount of charge to power storage device B and the lifetime of power storage device B, and uses the obtained charge amount—lifetime map MAP to predict the lifetime of power storage device B based on the electric power consumption of power storage device B for each travel pattern.

[0107] FIG. **10** is a diagram showing an exemplary relation between the amount of charge to power storage device B and the lifetime of power storage device B. Referring to FIG. **10**, as the amount of charge to power storage device B is larger, a greater load is exerted on power storage device B, and accordingly power storage device B degrades further and the lifetime of power storage device B is shortened. Here, as the lifetime of power storage device B varies depending on factors such as the SOC and temperature of power storage device B and the degree of the charge rate, server **40** stores a plurality of maps for various conditions of power storage device B.

[0108] Referring again to FIG. **8**, usage cost prediction unit **118** predicts the cost of using power storage device B for each of the travel patterns extracted by travel pattern extraction unit **112**. Specifically, usage cost prediction unit **118** obtains from server **40** replacement cost COST**3** of power storage device B (the price of power storage device B and the cost required for replacement of power storage device B), and calculates the cost of using power storage device B by dividing the obtained replacement cost COST**3** by the lifetime of power storage device B predicted by lifetime prediction unit **116**. In other words, as the lifetime of power storage device B is shorter, the cost of using power storage device B is higher and, as the lifetime of power storage device B is longer, the cost of using power storage device B is lower.

[0109] Display control unit **120** outputs to display device **34** the energy cost (fuel cost and electric power cost) predicted by energy cost prediction unit **114** for each travel pattern as well as the cost of using power storage device B predicted by usage cost prediction unit **118** for each travel pattern, and controls the state of display of display device **34**.

[0110] FIG. **11** is a diagram showing an exemplary menu selection screen of display device **34**. Referring to FIG. **11**, display device **34** presents a plurality of menu items that can be selected by a user. "Long-Battery-Life Travel" shown in a region **138** corresponds for example to travel pattern **1** shown in FIG. **9**. Namely, when this "Long-Battery-Life Travel" is selected, the amount of charge from charging station **30** to power storage device B is kept small.

[0111] "ECO Travel" shown in a region **140** corresponds for example to travel pattern **3** shown in FIG. **9**. Namely, when this "ECO Travel" is selected, a larger amount of charge is supplied from charging station **30** to power storage device B.

[0112] "Economical Travel" shown in a region **142** corresponds to a travel pattern where the energy cost, namely the sum of the fuel cost and the electric power cost is minimum. When this "Economic Travel" is selected, the amount of charge is selected that minimizes the energy cost calculated based on the unit fuel price and the unit price of the charging electric power at the time.

[0113] "Full Charge" shown in a region **144** requires that power storage device B is charged until the power storage device is fully charged. When this "Full Charge" is selected, power storage device B is charged from charging station **30** until power storage device B is fully charged.

[0114] FIG. **12** is a diagram showing an exemplary cost display screen of display device **34**. Referring to FIG. **12**, when a user selects any of the menu items from the menu selection screen shown in FIG. **11**, display device **34** presents, for the selected menu item, the EV travel distance, respective predicted values of the fuel cost, the electric power cost (charge cost), the cost of using power storage device B, and the total cost, as well as the predicted value of the amount of charge from charging station **30** to power storage device B.

[0115] Specifically, display device **34** presents to the user the cost (energy cost and cost of using power storage device B) for the next travel, in association with the amount of charge from charging station **30** to power storage device B. When a region **146** is selected, charge ECU **32** is informed of the selection. When a region **148** is selected, the state of display returns to the menu selection screen shown in FIG. **11**. Here, as the predicted value of the amount of charge to power storage device B, the electric power consumption of power storage device B is presented.

[0116] Referring again to FIG. **8**, charge command output unit **122** transmits to vehicle **10** via connection cable **20**, a charge command to charge the power storage device by the amount of charge associated with the menu item selected by the user on display device **34**.

[0117] FIG. **13** is a flowchart illustrating a control structure of charge ECU **32** shown in FIG. **1**. The process of the flowchart is called from a main routine and executed at regular time intervals or each time a predetermined condition is satisfied.

[0118] Referring to FIG. **13**, charge ECU **32** determines whether or not a user instructs to start charging power storage device B of vehicle **10** from charging station **30** (step S**110**). The instruction to start charging may be input by the user from display device **34** for example.

[0119] When charge ECU **32** determines that the instruction to start charging is given YES in step S**110**), charge ECU **32** obtains travel records (including the fuel consumption of engine **204** and the electric power consumption of power storage device B) of vehicle **10** from vehicle **10** via connection cable **20** (step S**120**). Then, charge ECU **32** extracts a travel pattern of vehicle **10** based on the obtained travel records (step S**130**). Further, charge ECU **32** obtains unit fuel price COST**1** and unit price of the charging electric power COST**2** from server **40** (step S**140**).

[0120] For each travel pattern extracted in step S**130**, charge ECU **32** predicts the fuel cost by multiplying the fuel consumption of engine **204** by unit fuel price COST**1**, and predicts the electric power cost by multiplying the electric power consumption of power storage device B by unit price of the charging electric power COST**2** (step S**150**).

[0121] Then, charge ECU **32** obtains charge amount—lifetime map MAP from server **40** and uses the obtained charge

amount—lifetime map MAP to predict the lifetime of power storage device B for each travel pattern, based on the electric power consumption of power storage device B (corresponding to the amount of charge from charging station **30** to power storage device B) (step S**160**).

[0122] Further, charge ECU **32** obtains from server **40** replacement cost COST**3** of power storage device B (the price of power storage device B and the cost required for replacement of power storage device B), and predicts the cost of using power storage device B by dividing the obtained replacement cost COST**3** by the predicted lifetime of power storage device B, for each travel pattern (step S**170**).

[0123] Then, charge ECU **32** outputs to display device **34** the energy cost (the fuel cost and the electric power cost) and the cost of using power storage device B that are predicted for each travel pattern (step S**180**). Then, charge ECU **32** determines whether or not a user inputs selection of a menu item on display device **34** (step S**190**).

[0124] When a menu item on display device **34** is selected by a user (YES in step S**190**), charge ECU **32** outputs a charge command to charge the power storage device by the amount of charge associated with the selected menu item to vehicle **10** via connection cable **20**. Accordingly, charging of power storage device B of vehicle **10** is started (step S**200**).

[0125] While the three travel patterns are extracted based on travel records according to the description above, the number of extracted travel patterns is not limited to three. From a plurality of extracted travel patterns, a travel pattern that is not found from the past travel records may be learned. For example, from the three travel patterns shown in FIG. **9**, a travel pattern where the EV travel distance is still longer may be learned and a predictive calculation of the cost and the amount of charge may be performed for the learned travel pattern.

[0126] In this way, the first embodiment predicts, before power storage device B of vehicle **10** is charged from charging station **30**, the energy cost (the fuel cost and the electric power cost) for the next travel as well as the cost of using power storage device B based on the past travel records, and presents the predicted costs together with the amount of charge to power storage device B to a user by means of display device **34**. According to a user's instruction from display device **34**, an instruction is given to charge power storage device B.

[0127] As seen from above, in accordance with the first embodiment, a user can select the amount of charge to power storage device B of vehicle **10** from charging station **30**, in consideration of the cost of using power storage device B together with the energy cost.

Second Embodiment

[0128] In the first embodiment, the energy cost and the cost of using power storage device B are predicted based on travel records in the past. In the present second embodiment, the energy cost and the cost of using power storage device B are predicted based on a travel route that is set by a navigation device of the vehicle.

[0129] FIG. **14** is a schematic configuration diagram of a vehicle in the second embodiment. Referring to FIG. **14**, vehicle **10**A includes, as compared with the configuration of vehicle **10** in the first embodiment shown in FIG. **2**, a navigation device **160** instead of storage unit **154** and includes a vehicle ECU **152**A instead of vehicle ECU **152**.

[0130] Navigation device **160** is configured to display the present position of the vehicle and to allow a user to set a destination and a travel route to the destination. When a destination is set by a user, navigation device **160** outputs to vehicle ECU **152**A the travel route information including items such as the destination, the travel route to the destination and the travel distance to the destination.

[0131] When connector **158** is connected to charging station **30**, vehicle ECU **152**A uses modem **156** to output the travel route information received from navigation device **160** to charging station **30** via electric power lines ACL**1**, ACL**2**.

[0132] In the second embodiment, the travel route information set by navigation device **160** is used instead of travel records for performing a predictive calculation of the energy cost and the cost of using power storage device B by the charge ECU of charging station **30**, as described hereinlater. It is therefore unnecessary to collect travel records and transmit the travel records to charging station **30** as done by vehicle ECU **152** in the first embodiment. Other features of vehicle ECU **152**A are similar to those of vehicle ECU **152** in the first embodiment.

[0133] FIG. **15** is a functional block diagram of a charge ECU in the second embodiment. Referring to FIG. **15**, charge ECU **32**A includes, as compared with the configuration of charge ECU **32** in the first embodiment shown in FIG. **8**, a travel state prediction unit **124** instead of travel pattern extraction unit **112**.

[0134] Travel state prediction unit **124** obtains from vehicle **10**A the travel route information concerning the next travel as set by navigation device **160** of vehicle **10**A. Travel state prediction unit **124** also obtains from server **40** the information concerning the road gradient of the travel route included in the obtained travel route information. Based on the obtained travel route information and the obtained information concerning the road gradient, travel state prediction unit **124** predicts travel states for a plurality of travel patterns. Specifically, for a plurality of travel patterns each, the fuel consumption of engine **204** and the electric power consumption of power storage device B are predicted. As for a plurality of travel patterns, a plurality of travel patterns as shown in FIG. **9** are prepared. The information concerning the road gradient of the travel route may be held by navigation device **160** of vehicle **10**A.

[0135] Energy cost prediction unit **114** predicts, for each travel pattern, the fuel cost and the electric power cost using the fuel consumption of engine **204** and the electric power consumption of power storage device B that are predicted by travel state prediction unit **124**. Lifetime prediction unit **116** predicts, for each travel pattern, the lifetime of power storage device B using the electric power consumption of power storage device B that is predicted by travel state prediction unit **124**.

[0136] Other features of charge ECU **32**A are similar to those of charge ECU **32** in the first embodiment.

[0137] FIG. **16** is a flowchart illustrating a control structure of charge ECU **32**A in the second embodiment. The process of the flowchart is also called from a main routine and executed at regular time intervals or each time a predetermined condition is satisfied.

[0138] Referring to FIG. **16**, the flowchart includes steps S**125**, S**135** and S**155** instead of steps S**120**, S**130**, S**150** respectively in the flowchart shown in FIG. **13**. Specifically, when it is determined that an instruction to start charging is given in step S**110**, charge ECU **32**A obtains travel route

information set by navigation device **160** of vehicle **10**A, from vehicle **10**A via connection cable **20** (step S**125**).

[0139] Then, charge ECU **32**A predicts the state of travel of vehicle **10**A for each of a plurality of travel patterns, based on the obtained travel route information (step S**135**). Specifically, charge ECU **32**A obtains from server **40** the information concerning the road gradient of the travel route included in the obtained travel route information, and predicts the fuel consumption of engine **204** and the electric power consumption of power storage device B for each of a plurality of travel patterns, in consideration of the distance and the road gradient of the travel route to the destination for example.

[0140] When unit fuel price COST**1** and unit price of the charging electric power COST**2** are obtained from server **40** in step S**140**, charge ECU **32**A predicts the fuel cost by multiplying the fuel consumption of engine **204** as predicted in step S**135** by unit fuel price COST**1**, and predicts the electric power cost by multiplying the electric power consumption of power storage device B as predicted in step S**135** by unit price of the charging electric power COST**2**, for each travel pattern (step S**155**). Charge ECU **32**A then proceeds to step S**160** in the process.

[0141] As seen from above, the second embodiment uses the travel route information set by navigation device **160** instead of travel records in the first embodiment. The second embodiment can therefore achieve similar effects to those of the first embodiment without collecting travel records by the vehicle.

Third Embodiment

[0142] In the present third embodiment, operations performed by charging station **30** in the first embodiment are all performed by the vehicle.

[0143] FIG. **17** is a schematic configuration diagram of a vehicle in the third embodiment. Referring to FIG. **17**, as compared with the configuration of vehicle **10** in the first embodiment shown in FIG. **2**, vehicle **10**B does not include modem **156** but further includes a display device **162**, and includes a vehicle ECU **152**B instead of vehicle ECU **152**.

[0144] Vehicle ECU **152**B predicts, for each of a plurality of travel patterns extracted from travel records of vehicle **10**B, the energy cost for the next travel of vehicle **10**B and the lifetime of power storage device B according to the amount of charge from charging station **30** to power storage device B. Based on the predicted lifetime, vehicle ECU **152**B predicts the cost of using power storage device B according to the amount of charge to power storage device B.

[0145] Display device **162** has functions similar to those of display device **34** in the first embodiment. Storage unit **154** stores travel records collected during the travel of the vehicle, and stores various data used by vehicle ECU **152**B for performing a predictive calculation of the energy cost of vehicle **10**B as well as the cost of using power storage device B. Other features of vehicle **10**B are similar to those of vehicle **10**.

[0146] FIG. **18** is a functional block diagram of vehicle ECU **152**B shown in FIG. **17**. Referring to FIG. **18**, vehicle ECU **152**B includes a travel record collection unit **350**, a travel pattern extraction unit **352**, an energy cost prediction unit **354**, a lifetime prediction unit **356**, a usage cost prediction unit **358**, a display control unit **360**, and a charge command output unit **362**.

[0147] Travel record collection unit **350** collects travel records during the travel of the vehicle, and outputs the collected travel records to storage unit **154**. Travel pattern extraction unit **352** reads from storage unit **154** the travel records collected by travel record collection unit **350**, and extracts a travel pattern of vehicle **10**B based on the read travel records. Here, the travel pattern is extracted in a similar manner to the one by travel pattern extraction unit **112** of charge ECU **32** in the first embodiment.

[0148] Energy cost prediction unit **354** uses unit fuel price COST**1** and unit price of the charging electric power COST**2** stored in storage unit **154** to calculate the energy cost for each of travel patterns extracted by travel pattern extraction unit **352**.

[0149] Lifetime prediction unit **356** uses a charge amount—lifetime map MAP stored in storage unit **154** to predict the lifetime of power storage device B for each of travel patterns extracted by travel pattern extraction unit **352**.

[0150] Usage cost prediction unit **358** uses replacement cost COSTS of power storage device B stored in storage unit **154** to predict the cost of using power storage device B for each of travel patterns extracted by travel pattern extraction unit **352**.

[0151] Display control unit **360** controls the state of display of display device **162**. In order to charge the power storage device by an amount of charge associated a menu item selected by a user on display device **162**, charge command output unit **362** activates signal CHRG to be output to power output device **150**, and inactivates signal CHRG when the power storage device is charged by the set amount of charge.

[0152] As seen from above, predictive calculations of the energy cost and the cost of using power storage device B are performed by vehicle **10**B in the third embodiment. Therefore, according to the third embodiment, it is unnecessary to communicate travel records and charge command between vehicle **10**B and charging station **30**, and thus it is unnecessary to provide a communication interface for performing communication between vehicle **10**B and charging station **30**.

Fourth Embodiment

[0153] In the present fourth embodiment, the operations performed by charging station **30** in the second embodiment are all performed by the vehicle.

[0154] FIG. **19** is a schematic configuration diagram of a vehicle in the fourth embodiment. Referring to FIG. **19**, as compared with the configuration of vehicle **10**A in the second embodiment shown in FIG. **14**, vehicle **10**C does not include modem **156** but further includes a storage unit **154**, and includes a vehicle ECU **152**C and a navigation device **160**A instead of vehicle ECU **152**A and navigation device **160** respectively.

[0155] Navigation device **160**A further holds information concerning the road gradient as map information. When a user sets a destination, navigation device **160**A outputs to vehicle ECU **152**C travel route information including items such as the destination, a travel route to the destination, information concerning the road gradient of the travel route, and the distance of travel to the destination.

[0156] Navigation device **160**A also has the functions of display device **162** shown in FIG. **17**. Specifically, for each of a plurality of travel patterns, navigation device **160**A displays the energy cost for the next travel and the cost of using power storage device B predicted by vehicle ECU **152**C, in association with the amount of charge from charging station **30** to power storage device B.

[0157] Based on the travel route information received from navigation device **160**A, vehicle ECU **152**C predicts the

energy cost for the next travel of vehicle **10**B and the lifetime of power storage device B according to the amount of charge from charging station **30** to power storage device B, for each of a plurality of travel patterns. Based on the predicted lifetime, vehicle ECU **152**C predicts the cost of using power storage device B according to the amount of charge to power storage device B.

[0158] Storage unit **154** stores various data used by vehicle ECU **152**C for performing predictive calculations of the energy cost of vehicle **10**C and the cost of using power storage device B. Other features of vehicle **10**C are similar to those of vehicle **10**A.

[0159] FIG. **20** is a functional block diagram of vehicle ECU **152**C shown in FIG. **19**. Referring to FIG. **20**, as compared with the configuration of vehicle ECU **152**B in the third embodiment shown in FIG. **18**, vehicle ECU **152**C does not include travel record collection unit **350** but includes a travel state prediction unit **364** instead of travel pattern extraction unit **352**.

[0160] Travel state prediction unit **364** predicts a state of travel for each of a plurality of travel patterns, based on the travel route information received from navigation device **160**A. Specifically, for a plurality of travel patterns each, the fuel consumption of engine **204** and the electric power consumption of power storage device B are predicted.

[0161] Energy cost prediction unit **354** uses the fuel consumption of engine **204** and the electric power consumption of power storage device B that are predicted by travel state prediction unit **364** to predict the fuel cost and the electric power cost for each travel pattern. Lifetime prediction unit **356** uses the electric power consumption of power storage device B predicted by travel state prediction unit **364** to predict the lifetime of power storage device B for each travel pattern. Other features of vehicle ECU **152** are those as described in connection with the third embodiment above.

[0162] As seen from above, the fourth embodiment uses the travel route information that is set by navigation device **160**A instead of travel records in the third embodiment. Thus, according to the fourth embodiment, travel records are not collected by the vehicle and it is unnecessary to provide a communication interface for performing communication between vehicle **10**C and charging station **30**.

[0163] According to the above-described second and fourth embodiments, the cost and the amount of charge are predicted for each of a plurality of travel patterns, based on the travel route set by navigation devices **160**, **160**A. In the case where an emission control area or noise control area is present on the travel route, the state of travel (the fuel consumption of engine **204** and the electric power consumption of power storage device B) may be predicted supposing that the vehicle is driven in the EV travel mode in this area, and predictive calculations of the cost and the amount of charge may be performed based on the predicted state of travel.

[0164] Further, in the case where such a control area is present on the travel route, "Long-Battery-Life Travel" in which the amount of charge is smaller and the EV travel distance is shorter may be restrained from being selected on the menu selection screen of display device **34** shown in FIG. **11**, or "Full Charge" may be forced to be selected.

[0165] According to the above-described first and second embodiments, server **40** holds various data used by charge ECU **32** for performing predictive calculations of the energy cost and the cost of using the power storage device. Alternatively, a user may set the various data at charging station **30** or vehicles **10**, **10**A. Further, according to the above-described third and fourth embodiments, the various data is stored in storage unit **154**. Alternatively, a user may set the various data, or the data may be downloaded from a server for example outside the vehicle by radio for example.

[0166] Further, according to the above-described first and second embodiments, the communication between vehicles **10**, **10**A and charging station **30** is performed by means of PLC (Power Line Communication) via connection cable **20** (electric power lines ACL**1**, ACL**2**). Alternatively, another communication line may be provided or communication may be performed by radio.

[0167] In the above-described embodiments each, the charging electric power from charging station **30** is supplied to the neutral points of motor generators MG**1**, MG**2**, and power storage device B is charged from charging station **30** by means of inverters **220**, **230**. Alternatively, a charging-dedicated inverter receiving the charging electric power from charging station **30** may be separately provided.

[0168] In the above-described embodiments each, the description is given of vehicles **10**, **10**A-**10**C as a series/parallel hybrid vehicle in which the power of engine **204** can be transmitted in such a manner that the power is split by power split device **203** into the one for the axle and the one for motor generator MG**1**. The present invention, however, is applicable to hybrid vehicles of other types. Specifically, the present invention is applicable to a so-called series hybrid vehicle in which engine **204** is used only for driving motor generator MG**1** and the drive force for the vehicle is generated by motor generator MG**2** only, or a motor-assisted type hybrid vehicle in which the engine is used as a primary power source and a motor assists the engine as required.

[0169] The present invention is also applicable to a vehicle without including voltage step-up converter **210**.

[0170] The control performed by charge ECU **32**, **32**A as described above is actually performed by a CPU (Central Processing Unit), The CPU reads a program including the steps of the flowcharts shown in FIGS. **13** and **16** from a ROM (Read Only Memory), and executes the read program to perform the operations following the flowcharts shown in FIGS. **13** and **16**. Therefore, the ROM corresponds to a computer (CPU)-readable recording medium on which a program is recorded that includes the steps of the flowcharts shown in FIGS. **13** and **16**.

[0171] Display devices **34**, **162** and navigation device **160**A as described above correspond to an embodiment of "information unit" of the present invention, and charge command output units **122**, **362** as described above correspond to an embodiment of "charge command generation unit" of the present invention. Further, engine **204** as described above corresponds to an embodiment of "internal combustion engine" of the present invention, and motor generator MG**1** and inverter **220** as described above correspond to an embodiment of "electric power generation device" of the present invention. Further, motor generator MG**2** as described above corresponds to an embodiment of "electric motor" of the present invention, and inverters **220**, **230**, motor generators MG**1**, MG**2** and MG-ECU **240** as described above correspond to an embodiment of "charging device" of the present invention.

[0172] It should be construed that embodiments disclosed herein are by way of illustration in all respects, not by way of limitation. It is intended that the scope of the present invention is defined by claims, not by the above description of the

embodiments, and includes all modifications and variations equivalent in meaning and scope to the claims.

1. A charging control apparatus for an electrically powered vehicle configured in such a manner that a power storage device mounted on the vehicle is chargeable from a power supply outside the vehicle, said charging control apparatus comprising:

an energy cost prediction unit for predicting an energy cost for a next travel of the vehicle based on an energy consumption during a travel of the vehicle;

a lifetime prediction unit for predicting a lifetime of said power storage device according to an amount of charge to said power storage device, using a relation between an amount of charge to said power storage device and a lifetime of said power storage device;

a usage cost prediction unit for predicting a cost of using said power storage device according to the amount of charge to said power storage device, based on the lifetime of said power storage device predicted by said lifetime prediction unit;

an information unit for informing a user of said energy cost and the cost of using said power storage device in association with the amount of charge to said power storage device; and

a charge command generation unit for generating a command to charge said power storage device from said power supply in accordance with an instruction from said user.

2. The charging control apparatus for an electrically powered vehicle according to claim **1**, wherein

said electrically powered vehicle includes:

an internal combustion engine;

an electric power generation device configured to be able to generate electric power using an output of said internal combustion engine;

said power storage device capable of storing the electric power generated by said electric power generation device;

an electric motor for generating a drive force for causing the vehicle to travel, from the electric power received from said power storage device;

a travel record collection unit for collecting and storing a travel record during a travel of the vehicle; and

a charging device configured to be able to charge said power storage device with electric power received from said power supply outside the vehicle,

said energy cost prediction unit calculates a fuel consumption of said internal combustion engine and an electric power consumption of said power storage device based on the travel record collected by said travel record collection unit, and predicts a fuel cost and an electric power cost for the next travel based on the calculated fuel consumption and the calculated electric power consumption, and

said lifetime prediction unit predicts the lifetime of said power storage device using said calculated electric power consumption of said power storage device as the amount of charge with which said power storage device is charged by said charging device.

3. The charging control apparatus for an electrically powered vehicle according to claim **1**, wherein

said electrically powered vehicle includes:

an internal combustion engine;

an electric power generation device configured to be able to generate electric power using an output of said internal combustion engine;

said power storage device capable of storing the electric power generated by said electric power generation device;

an electric motor for generating a drive force for causing the vehicle to travel, from the electric power received from said power storage device;

a navigation device capable of setting a travel route; and

a charging device configured to be able to charge said power storage device with electric power received from said power supply outside the vehicle,

said energy cost prediction unit calculates a fuel consumption of said internal combustion engine and an electric power consumption of said power storage device based on the travel route set by said navigation device, and predicts a fuel cost and an electric power cost for the next travel based on the calculated fuel consumption and the calculated electric power consumption, and

said lifetime prediction unit predicts the lifetime of said power storage device using said calculated electric power consumption of said power storage device as the amount of charge with which said power storage device is charged by said charging device.

4. The charging control apparatus for an electrically powered vehicle according to claim **2**, wherein

said electrically powered vehicle further includes a travel mode control unit for controlling switching of a travel mode including a first mode where a target of a state amount indicating a state of charge of said power storage device is not set and a second mode where the target of said state amount is set.

5. The charging control apparatus for an electrically powered vehicle according to claim **4**, wherein

said travel mode control unit sets said travel mode to said first mode after completion of charging of said power storage device by said charging device, switches said travel mode to said second mode when said state amount decreases to approach a specified value indicating the target of said state amount, and thereafter controls electric power generation by said electric power generation device in such a manner that said state amount is around said specified value.

6. An electrically powered vehicle comprising:

a chargeable and dischargeable power storage device;

an electric motor for generating a drive force for causing the vehicle to travel, from electric power received from said power storage device;

a charging device configured to be able to charge said power storage device with electric power received from a power supply outside the vehicle;

an energy cost prediction unit for predicting an energy cost for a next travel of the vehicle based on an energy consumption during a travel of the vehicle;

a lifetime prediction unit for predicting a lifetime of said power storage device according to an amount of charge to said power storage device, using a relation between an amount of charge to said power storage device and a lifetime of said power storage device;

a usage cost prediction unit for predicting a cost of using said power storage device according to the amount of

charge to said power storage device, based on the lifetime of said power storage device predicted by said lifetime prediction unit;

an information unit for informing a user of said energy cost and the cost of using said power storage device in association with the amount of charge to said power storage devices; and

a charging control unit for controlling charging to said power storage device from said power supply by said charging device in accordance with an instruction from said user.

7. The electrically powered vehicle according to claim **6**, further comprising:

an internal combustion engine;

an electric power generation device configured to be able to generate electric power using an output of said internal combustion engine; and

a travel record collection unit for collecting and storing a travel record during a travel of the vehicle, wherein

said power storage device is able to store the electric power generated by said electric power generation device,

said energy cost prediction unit calculates a fuel consumption of said internal combustion engine and an electric power consumption of said power storage device based on the travel record collected by said travel record collection unit, and predicts a fuel cost and an electric power cost for the next travel based on the calculated fuel consumption and the calculated electric power consumption, and

said lifetime prediction unit predicts the lifetime of said power storage device using said calculated electric power consumption of said power storage device as the amount of charge with which said power storage device is charged by said charging device.

8. The electrically powered vehicle according to claim **6**, further comprising:

an internal combustion engine;

an electric power generation device configured to be able to generate electric power using an output of said internal combustion engine; and

a navigation device capable of setting a travel route, wherein

said power storage device is able to store the electric power generated by said electric power generation device,

said energy cost prediction unit calculates a fuel consumption of said internal combustion engine and an electric power consumption of said power storage device based on the travel route set by said navigation device, and predicts a fuel cost and an electric power cost for the next travel based on the calculated fuel consumption and the calculated electric power consumption, and

said lifetime prediction unit predicts the lifetime of said power storage device using said calculated electric power consumption of said power storage device as the amount of charge with which said power storage device is charged by said charging device.

9. The electrically powered vehicle according to claim **7**, further comprising a travel mode control unit for controlling switching of a travel mode including a first mode where a target of a state amount indicating a state of charge of said power storage device is not set and a second mode where the target of said state amount is set.

10. The electrically powered vehicle according to claim **9**, wherein

said travel mode control unit sets said travel mode to said first mode after completion of charging of said power storage device by said charging device, switches said travel mode to said second mode when said state amount decreases to approach a specified value indicating the target of said state amount, and thereafter controls electric power generation by said electric power generation device in such a manner that said state amount is around said specified value.

11. A method for charging control for an electrically powered vehicle configured in such a manner that a power storage device mounted on the vehicle is chargeable from a power supply outside the vehicle, comprising the steps of:

predicting an energy cost for a next travel of the vehicle based on an energy consumption during a travel of the vehicle;

predicting a lifetime of said power storage device according to an amount of charge to said power storage device, using a relation between an amount of charge to said power storage device and a lifetime of said power storage device;

predicting a cost of using said power storage device according to the amount of charge to said power storage device, based on the predicted lifetime of said power storage device;

informing a user of said energy cost and the cost of using said power storage device in association with the amount of charge to said power storage device; and

generating a command to charge said power storage device from said power supply in accordance with an instruction from said user.

12. The method for charging control for an electrically powered vehicle according to claim **11**, further comprising the step of collecting a travel record during a travel of said electrically powered vehicle, wherein

said electrically powered vehicle includes:

an internal combustion engine;

an electric power generation device configured to be able to generate electric power using an output of said internal combustion engine;

said power storage device capable of storing the electric power generated by said electric power generation device;

an electric motor for generating a drive force for causing the vehicle to travel, from the electric power received from said power storage device; and

a charging device configured to be able to charge said power storage device with electric power received from said power supply outside the vehicle,

in said step of predicting an energy cost, a fuel consumption of said internal combustion engine and an electric power consumption of said power storage device are calculated based on the travel record collected in said step of collecting a travel record, and a fuel cost and an electric power cost for the next travel are predicted based on the calculated fuel consumption and the calculated electric power consumption, and

in said step of predicting a lifetime of said power storage device, the lifetime of said power storage device is predicted using said calculated electric power consumption of said power storage device as the amount of charge with which said power storage device is charged by said charging device.

13. The method for charging control for an electrically powered vehicle according to claim **11**, wherein

said electrically powered vehicle includes:

an internal combustion engine;

an electric power generation device configured to be able to generate electric power using an output of said internal combustion engine;

said power storage device capable of storing the electric power generated by said electric power generation device;

an electric motor for generating a drive force for causing the vehicle to travel, from the electric power received from said power storage device;

a navigation device capable of setting a travel route; and

a charging device configured to be able to charge said power storage device with electric power received from said power supply outside the vehicle,

in said step of predicting an energy cost, a fuel consumption of said internal combustion engine and an electric power consumption of said power storage device are calculated based on the travel route set by said navigation device, and a fuel cost and an electric power cost for the next travel are predicted based on the calculated fuel consumption and the calculated electric power consumption, and

in said step of predicting a lifetime of said power storage device, the lifetime of said power storage device is predicted using said calculated electric power consumption of said power storage device as the amount of charge with which said power storage device is charged by said charging device.

14. A computer-readable recording medium having a program recorded thereon for a computer to execute the charging control for an electrically powered vehicle as recited in claim **11**.

* * * * *