US008427103B2

(12) **United States Patent**
Ohtomo

(10) **Patent No.: US 8,427,103 B2**
(45) **Date of Patent: Apr. 23, 2013**

(54) **CHARGING DEVICE FOR ELECTRIC VEHICLE**

(75) Inventor: **Yosuke Ohtomo**, Tokyo (JP)

(73) Assignee: **Fuji Jukogyo Kabushiki Kaisha**, Tokyo (JP)

(*) Notice: Subject to any disclaimer, the term of this patent is extended or adjusted under 35 U.S.C. 154(b) by 289 days.

(21) Appl. No.: **12/232,578**

(22) Filed: **Sep. 19, 2008**

(65) **Prior Publication Data**

US 2009/0079389 A1 Mar. 26, 2009

(30) **Foreign Application Priority Data**

Sep. 21, 2007 (JP) 2007-244748

(51) **Int. Cl.**
H02J 7/00 (2006.01)

(52) **U.S. Cl.**
USPC **320/109**; 439/133

(58) **Field of Classification Search** 320/109, 320/138
See application file for complete search history.

(56) **References Cited**

U.S. PATENT DOCUMENTS

5,202,617 A * 4/1993 Nor 320/130
5,283,513 A * 2/1994 Fujita et al. 320/138
5,545,046 A 8/1996 Masuda et al.
5,548,200 A * 8/1996 Nor et al. 320/109
5,627,448 A * 5/1997 Okada et al. 439/133
5,640,076 A 6/1997 Youn
6,087,805 A * 7/2000 Langston et al. 320/109
6,104,160 A 8/2000 Iwata et al.
6,114,833 A * 9/2000 Langston et al. 320/109
6,459,234 B2 * 10/2002 Kajiura 320/109
6,956,357 B2 * 10/2005 Nagai et al. 320/148

FOREIGN PATENT DOCUMENTS

JP 01-090203 6/1989
JP 04-299029 A 10/1992
JP 11-178234 7/1999

OTHER PUBLICATIONS

European Search Report Dated Nov. 24, 2008.

* cited by examiner

Primary Examiner — Ramy Ramadan
(74) *Attorney, Agent, or Firm* — McGinn IP Law Group, PLLC

(57) **ABSTRACT**

The present invention provides a charging device for an electric vehicle with which optimal charging can be performed reliably when charging a storage device of the electric vehicle, without performing fast charging and normal charging at the same time.

10 Claims, 7 Drawing Sheets

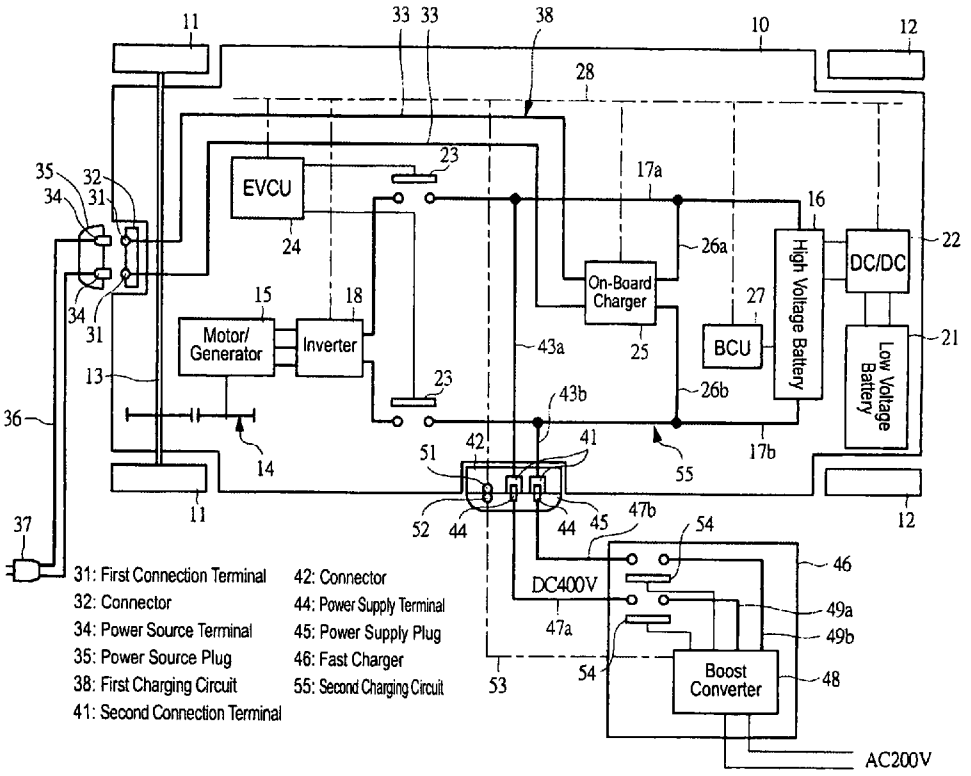

ChargeLogic LLC - **Ex. 2013**
IPR2026-00377
Tesla Inc. v. ChargeLogic LLC

FIG. 1

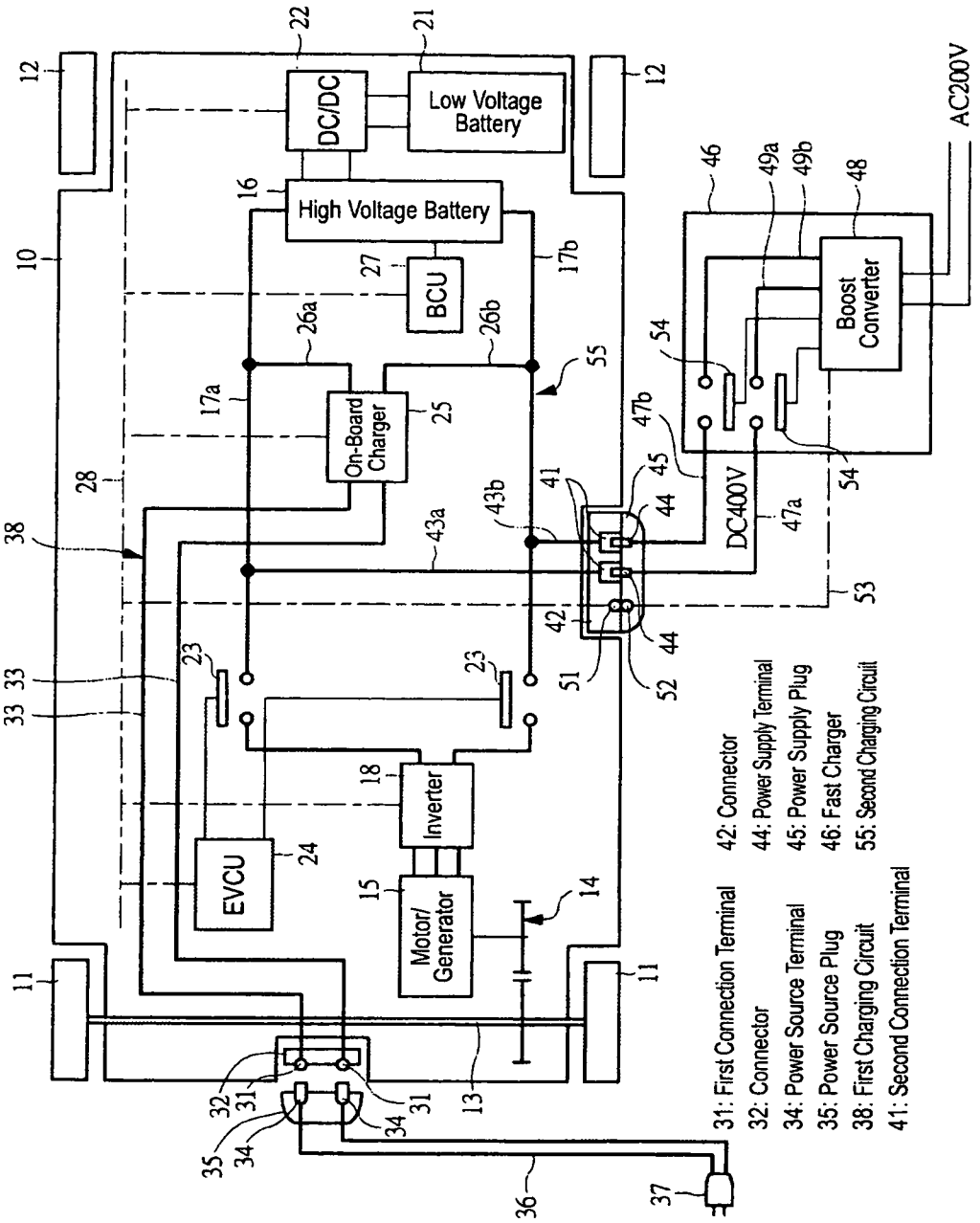
DC/DC
Low Voltage Battery
High Voltage Battery
BCU
On-Board Charger
EVCU
Inverter
Motor/ Generator
Boost Converter
DC400V
AC200V
31: First Connection Terminal
32: Connector
34: Power Source Terminal
35: Power Source Plug
38: First Charging Circuit
41: Second Connection Terminal
42: Connector
44: Power Supply Terminal
45: Power Supply Plug
46: Fast Charger
55: Second Charging Circuit

FIG. 2

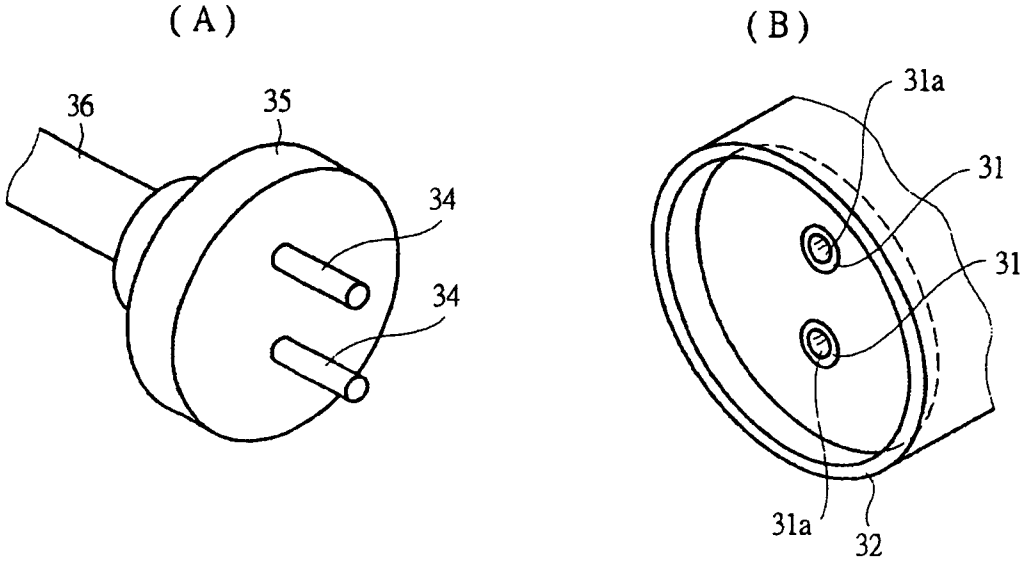

FIG. 3

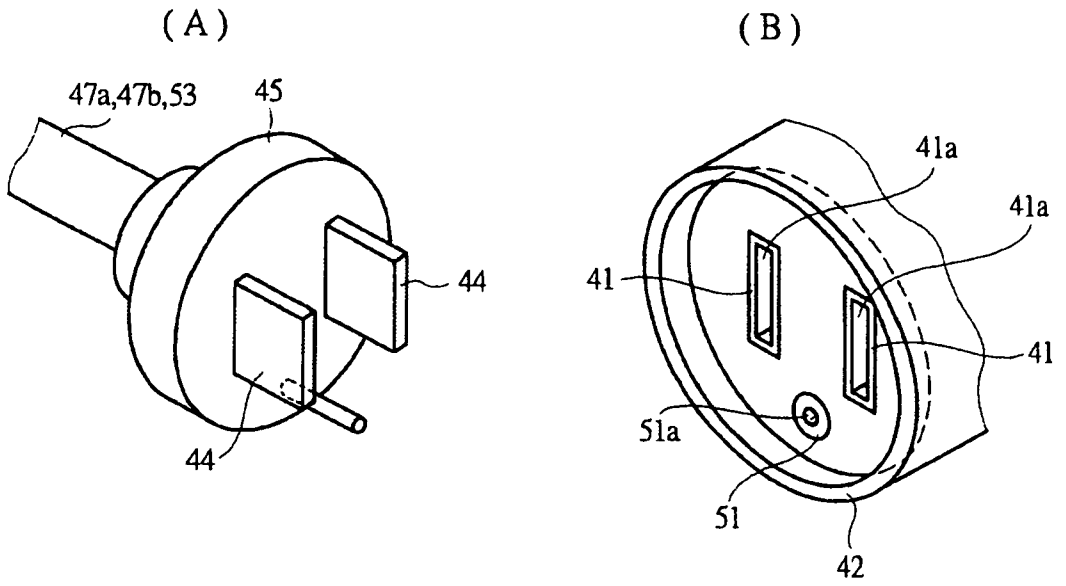

FIG. 4

(A)

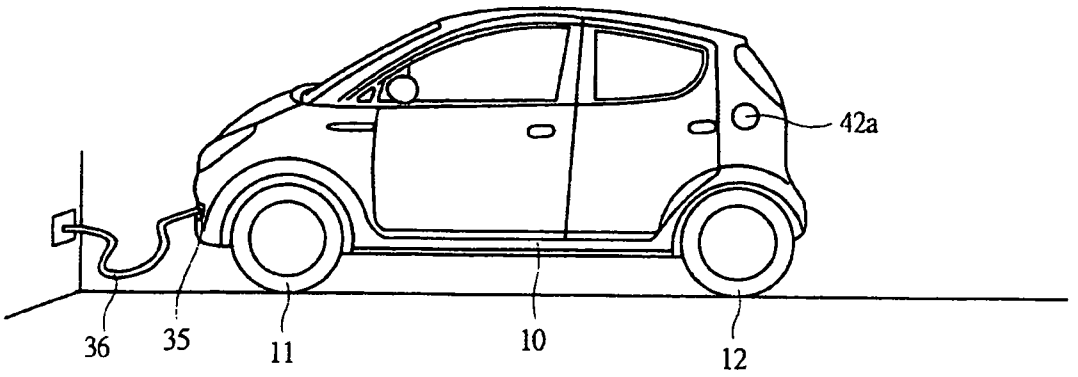

(B)

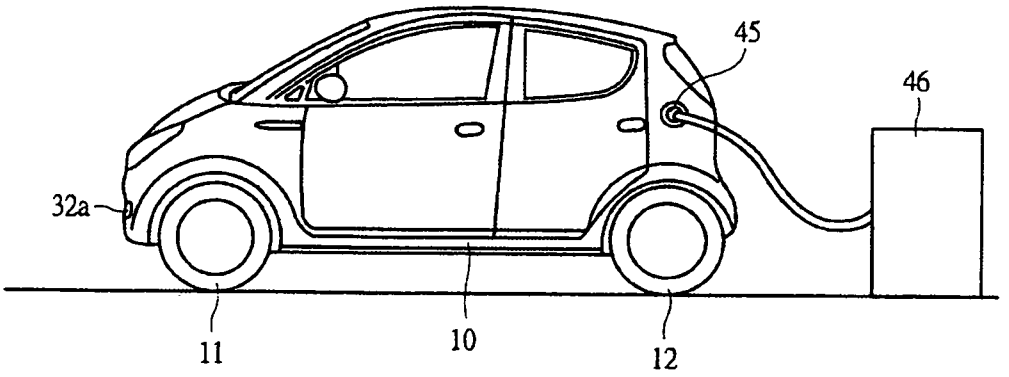

FIG. 5

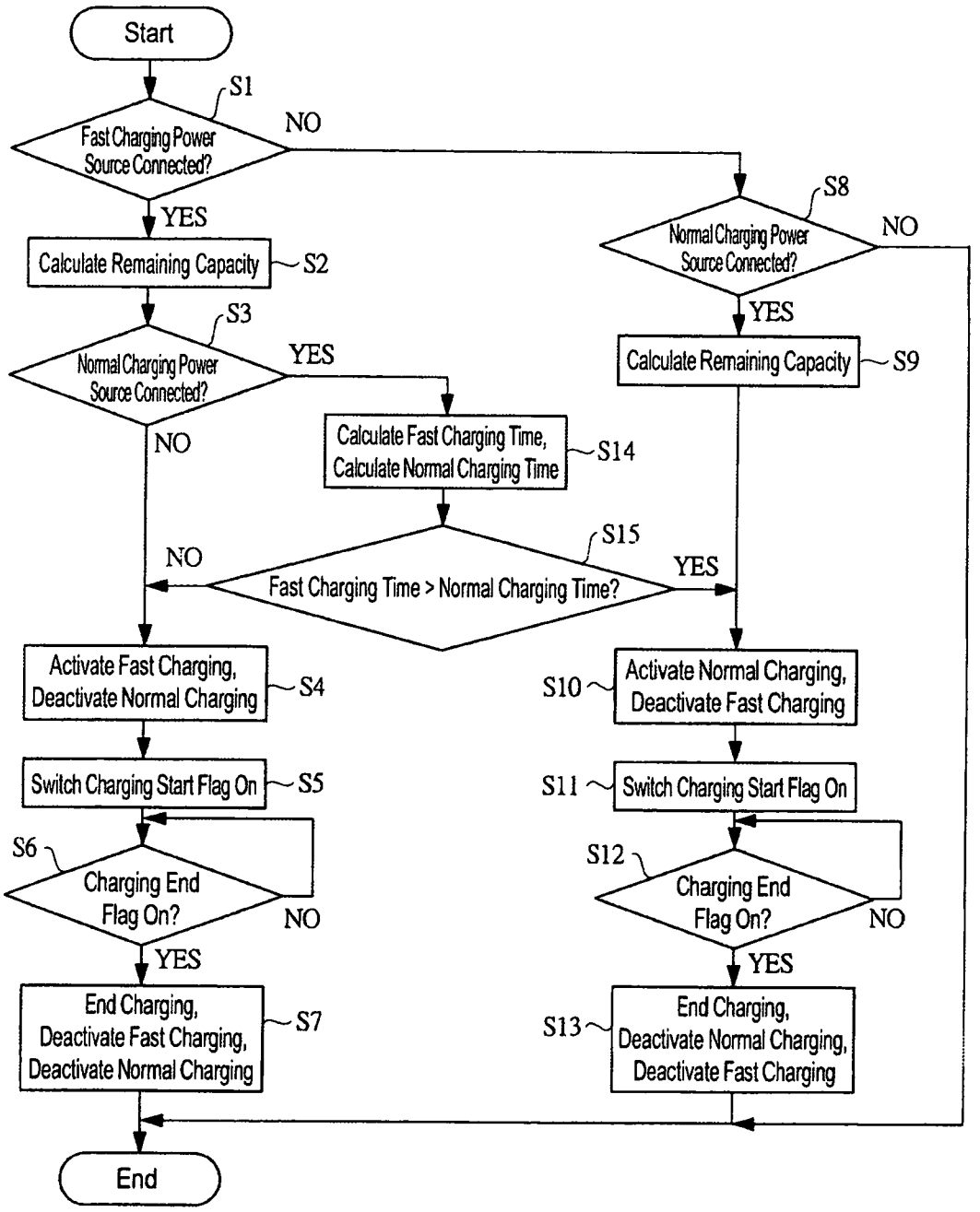
Start
S1
Fast Charging Power Source Connected?
NO
YES
Calculate Remaining Capacity
S2
S3
Normal Charging Power Source Connected?
YES
NO
Calculate Fast Charging Time, Calculate Normal Charging Time
S14
S15
Fast Charging Time > Normal Charging Time?
NO
YES
Activate Fast Charging, Deactivate Normal Charging
S4
Switch Charging Start Flag On
S5
S6
Charging End Flag On?
NO
YES
End Charging, Deactivate Fast Charging, Deactivate Normal Charging
S7
S8
Normal Charging Power Source Connected?
NO
YES
Calculate Remaining Capacity
S9
S10
Activate Normal Charging, Deactivate Fast Charging
S11
Switch Charging Start Flag On
S12
Charging End Flag On?
NO
YES
S13
End Charging, Deactivate Normal Charging, Deactivate Fast Charging
End

FIG. 6

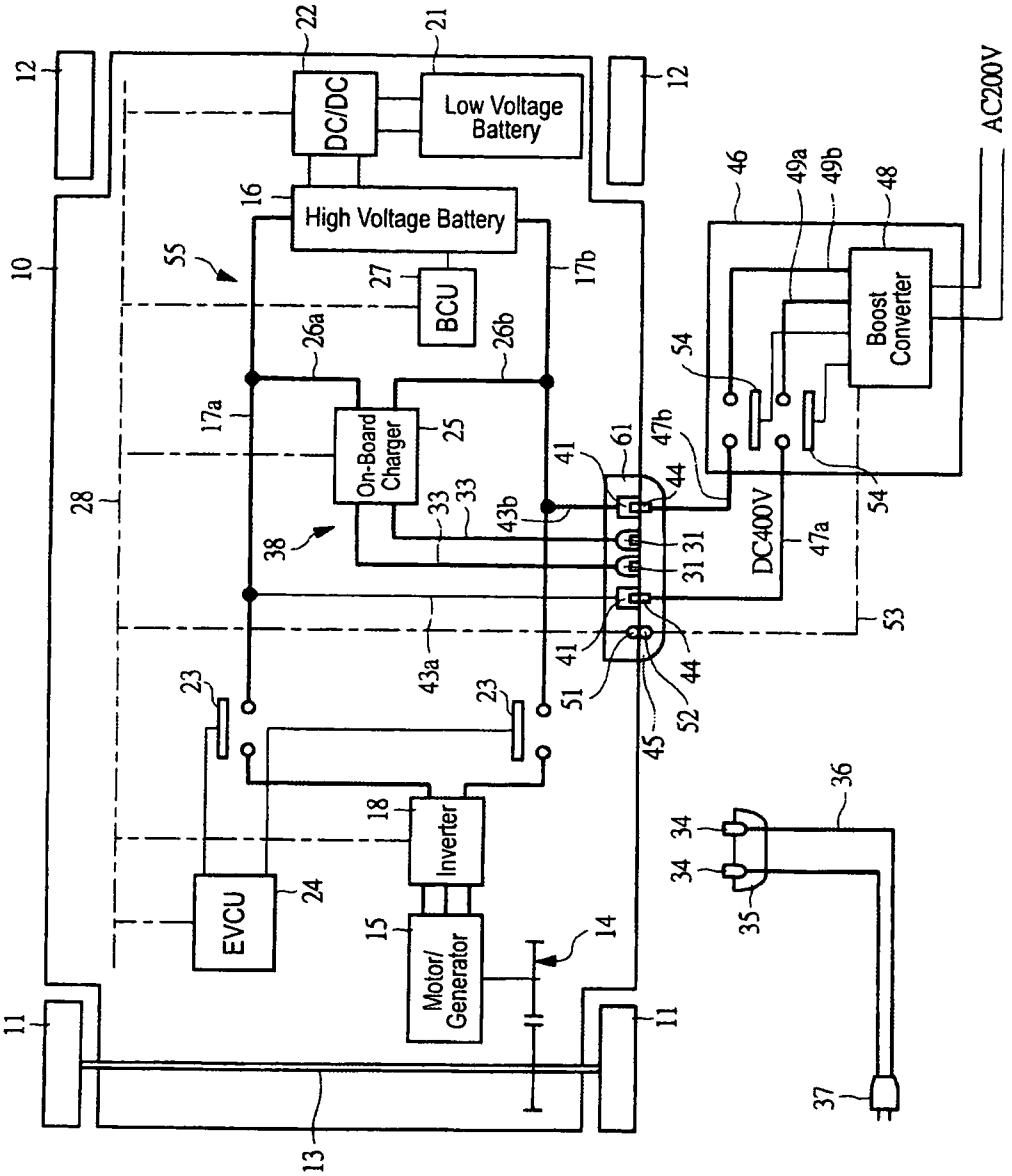
DC/DC
Low Voltage Battery
High Voltage Battery
BCU
On-Board Charger
Boost Converter
AC200V
DC400V
Inverter
Motor/ Generator
EVCU

FIG. 7

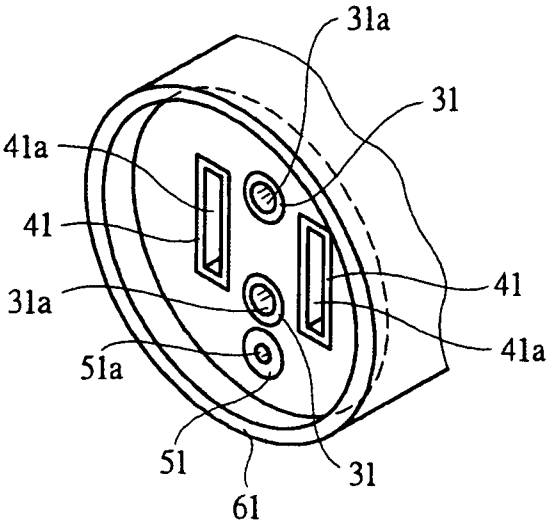

CHARGING DEVICE FOR ELECTRIC VEHICLE

CROSS-REFERENCE TO RELATED APPLICATIONS

The disclosure of Japanese Patent Application No. 2007-244748, filed on Sep. 21, 2007 including the specification, drawings and abstract is incorporated herein by reference in its entirety.

BACKGROUND OF THE INVENTION

1. Field of the Invention

The present invention relates to a charging device for an electric vehicle, which charges a storage device that supplies electric power to an electric motor for driving a vehicle.

2. Description of the Related Art

Electric vehicles include vehicles that use an electric motor alone as a drive source and hybrid vehicles that uses an electric motor and an engine as drive sources. Both types of electric vehicle include a battery serving as a storage device for supplying electric power to the electric motor, and when the remaining capacity of the battery decreases, the battery must be charged externally. Further, in a hybrid vehicle that uses both an electric motor and an engine as drive sources, the battery is usually charged by driving the engine, but occasionally the battery is charged by supplying electric power from an external power source, without driving the engine. When the battery is charged externally in this manner in an electric vehicle having an electric motor, including a hybrid vehicle, an on-board charger that raises the voltage of a household commercial power source and converts this voltage into direct-current power is installed in the electric vehicle so that the storage device can be charged using a commercial power source.

However, several hours are required to charge the storage device to a high voltage of up to approximately DC 400V, for example, by connecting a power source plug, or in other words an outlet, of an AC 100V or AC 200V household commercial power source to the vehicle body, and since this amount of time is excessive, an electric vehicle suffers greatly in terms of user-friendliness in comparison with a gasoline vehicle having a fuel tank that can be filled in a short period of time at a gas station.

Therefore, in recent years progress has been made in the development of a high-speed charger, or in other words a fast charger, that can fully charge a storage device for an electric vehicle in a short time period of approximately several tens of minutes using specialist facilities. Considering the prevalence of high-speed chargers and the user-friendliness of electric vehicles, however, it is preferable in reality to ensure that charging can also be performed from a household commercial power source. Note that Japanese Unexamined Patent Application Publication H11-178234 describes an electric vehicle in which a non-board battery is charged from a household power source.

To enable charging using both a high-speed charger and a commercial power source, a vehicle body is provided with a high-speed charging connector to which a power supply plug of a high-speed charger is connected so that the on-board battery can be charged using the high-speed charger, and a normal charging connector to which a power source plug is connected so that the on-board battery can be charged using a household commercial power source. However, different charging modes are used during high-speed charging and normal charging, and the method of charging the on-board battery differs between the two modes. Therefore, charging using both methods at the same time, which occurs when both the power supply plug and the power source plug are connected to the vehicle body, is preferably avoided.

Nevertheless, when both the high-speed charging connector and the normal charging connector are provided on the vehicle body, a user may mistakenly connect the power supply plug of the high-speed charger and the normal charging power source plug at the same time.

SUMMARY OF THE INVENTION

An object of the present invention is to provide a charging device for an electric vehicle with which optimum charging is performed reliably, without performing high-speed charging and normal charging at the same time, when charging a storage device of the electric vehicle.

A charging device for an electric vehicle according to the present invention charges a storage device for supplying electric power to an electric motor for driving a vehicle, and includes a first charging circuit for charging electric power supplied from an external power source to the storage device via an on-board charger and a second charging circuit for charging electric power supplied from an external charger to the storage device without passing through the on-board charger. The charging device comprises: a first connection terminal connected to the first charging circuit, which establishes a connection with the external power source; a second connection terminal connected to the second charging circuit, which establishes a connection with the external charger and has a different shape to the first connection terminal; and charging system switching means for charging the storage device from only one of the first charging circuit and the second charging circuit and preventing simultaneous charging from both the first charging circuit and the second charging circuit.

In the charging device for an electric vehicle according to the present invention, when the external power source is connected to the first connection terminal and the external charger is connected to the second connection terminal, the charging system switching means activate the connection terminal connected first such that the charging device is charged through the charging circuit having the connection terminal connected first.

In the charging device for an electric vehicle according to the present invention, when the external power source is connected to the first connection terminal and the external charger is connected to the second connection terminal, the charging system switching means activate the charging circuit having a shorter total charging time, from among the first charging circuit and the second charging circuit, such that the charging device is charged through the charging circuit having the shorter total charging time.

In the charging device for an electric vehicle according to the present invention, the charging system switching means are constituted by an aggregate connection terminal in which the first connection terminal and the second connection terminal are disposed collectively such that the charging system switching means are incapable of connecting a power source terminal of the external power source to the first connection terminal and connecting a power supply terminal of the external charger to the second connection terminal simultaneously. Also in the charging device for an electric vehicle according to the present invention, a power source plug having the power source terminal covers the second connection terminal when the power source terminal is connected to the first connection terminal, and a power supply plug having the

power supply terminal covers the first connection terminal when the power supply terminal is connected to the second connection terminal.

According to the present invention, the charging system switching means charge the storage device from only one of the first and second charging circuits and prevent simultaneous charging from both circuits. Therefore, even when the electric vehicle is provided with both a fast charging connection terminal to which a power supply plug of a fast charger is connected and a normal charging connection terminal to which an external power source for supplying electric power to an on-board charger is connected, the storage device is invariably charged via a single charging circuit. Hence, simultaneous fast charging and normal charging can be prevented and optimum charging can be performed, enabling an improvement in the charging operability of the electric vehicle.

When the fast charging connection terminal and the normal charging connection terminal are provided separately in the vehicle body and both the power source plug and the power supply plug are connected to the respective connection terminals, simultaneous charging through both of the charging circuits is prevented by prioritizing either the charging circuit having the connection terminal that was connected first or the charging circuit having the shorter total charging time. When the vehicle body is provided with an aggregate connection terminal in which the fast charging connection terminal and the normal charging connection terminal are provided collectively, simultaneous charging through both of the charging circuits is prevented by ensuring that only one of the power source plug and the power supply plug can be connected to the aggregate connection terminal at a time.

BRIEF DESCRIPTION OF THE DRAWINGS

FIG. **1** is a schematic diagram showing an electric vehicle having a charging device serving as an embodiment of the present invention;

FIG. **2**A is a perspective view showing an example of a power source plug, and FIG. **2**B is a perspective view showing a connector to which the power source plug is attached;

FIG. **3**A is a perspective view showing an example of a power supply plug, and FIG. **3**B is a perspective view showing a connector to which the power supply plug is attached;

FIG. **4**A is a front view showing the electric vehicle in a state where a high voltage battery is charged from an external power source terminal via an on-board charger, and FIG. **4**B is a front view showing the electric vehicle in a state where the high voltage battery is charged directly from a fast charger;

FIG. **5** is a flowchart showing an algorithm for determining a charging mode switch;

FIG. **6** is a schematic diagram showing an electric vehicle having a charging device according to another embodiment of the present invention; and

FIG. **7** is a perspective view showing an aggregate connector shown in FIG. **6**.

DESCRIPTION OF THE PREFERRED EMBODIMENTS

Embodiments of the present invention will be described in detail below on the basis of the drawings. FIG. **1** is a schematic diagram showing an electric vehicle having a charging device serving as an embodiment of the present invention.

A vehicle body **10** of this electric vehicle is provided with drive wheel side front wheels **11** and driven wheel side rear wheels **12**, and a motor/generator **15** is connected to a drive shaft **13** for driving the front wheels **11** via a pair of gears **14** having a fixed gear ratio. The motor/generator **15**, which serves as an electric motor for driving the vehicle, is a three-phase alternating current synchronous motor, and a high voltage battery **16** for supplying electric power to the motor/generator **15** is installed in the vehicle body **10** as a storage device. The high voltage battery **16** employs a lithium ion battery, i.e. a secondary battery, and outputs direct current power of 400V, for example.

The high voltage battery **16** is connected to an inverter **18** via power supply cables **17***a*, **17***b*. The inverter **18** converts a direct current from the high voltage battery **16** into a three-phase alternating current and supplies power to the motor/generator **15**. The motor/generator **15** has a function for recovering regenerative energy by generating power during braking of the vehicle and charging the high voltage battery **16** with this generated power. A low voltage battery **21** is also installed in the vehicle body **10** for supplying 12V direct current power, for example, to low voltage devices installed in the vehicle such as audio devices and air-conditioning fans. The low voltage battery **21** is charged by reducing the voltage of the high voltage battery **16** using a DC/DC converter **22**.

The power supply cables **17***a*, **17***b* are provided with a main relay **23** for switching the high voltage battery **16** and the inverter **18** between a connected state and a disconnected state. The main relay **23** performs a switching operation in accordance with a drive signal from a vehicle control unit (EVCU) **24**.

An on-board charger **25** is installed in the vehicle body **10** so that the high voltage battery **16** can be charged using an external power source such as a commercial power source, and an output terminal of the on-board charger **25** is connected to the high voltage battery **16** via the power supply cables **17***a*, **17***b* by output cables **26***a*, **26***b*. The on-board charger **25** charges the high voltage battery **16** by increasing the voltage of an AC 100V or AC 200V external power source, for example, and converting this voltage into a 400V direct current, for example. A battery control unit (BCU) **27** is connected to the high voltage battery **16**, and the battery control unit **27**, on-board charger **25**, inverter **18**, vehicle control unit **24**, and DC/DC converter **22** are connected to each other by a communication network **28**, i.e. a CAN (car area network), so as to be capable of exchanging information. Information such as the voltage and remaining capacity of the high voltage battery **16**, for example, is transmitted to the vehicle control unit **24** via the communication network **28**. The vehicle control unit **24** and battery control unit **27** include a CPU for calculating control signals, ROM for storing control programs, calculation equations, map data, and so on, and RAM for storing data temporarily.

A connector **32** having first connection terminals **31** is provided on a front end portion of the vehicle body **10**, and the connection terminals **31** of the connector **32** are connected to the on-board charger **25** by respective power supply cables **33**. A power source plug **35** having power source terminals **34** connected respectively to the connection terminals **31** is attached to the connector **32** detachably. The power source plug **35** is connected to a connection plug **37** via power supply cables **36**, and the connection plug **37** is attached to an external power source terminal detachably. Hence, when the external power source terminal is electrically connected to the on-board charger **25** by connecting the power source plug **35** to the connector **32** and connecting the connection plug **37** to the external power source terminal, or in other words a normal charging power source, a signal is transmitted from the on-

board charger **25** to the vehicle control unit **24** via the communication network **28**, and charging is performed on the high voltage battery **16**.

A circuit portion connecting the connector **32** to the high voltage battery **16** via the power supply cables **33**, the on-board charger **25**, the output cables **26***a*, **26***b*, and the power supply cables **17***a*, **17***b* constitutes a first charging circuit **38** for charging power supplied from the external power source to the high voltage battery **16** via the on-board charger **25**, and when the power source plug **35** is connected to the connector **32**, the on-board charger **25** charges the high voltage battery **16** via the first charging circuit **38** in a normal charging mode.

A connector **42** having second connection terminals **41** is provided on one side face of a rear portion side of the vehicle body **10**, and the connection terminals **41** of the connector **42** are connected directly to the power supply cables **17***a*, **17***b* by respective power supply cables **43***a*, **43***b*. A power supply plug **45** having power supply terminals **44** connected respectively to the connection terminals **41** is attached to the connector **42** detachably. The power supply terminals **44** of the power supply plug **45** are connected to output terminals of a fast charger **46** serving as an external charger via power supply cables **47***a*, **47***b*, and the fast charger **46** includes a boost converter **48** that boosts an alternating current supplied from the external power source and converts the boosted alternating current into a 400V direct current, for example.

The connector **42** is provided with a signal terminal **51** that is connected to the vehicle control unit **24** by a communication line, and the power supply plug **45** is provided with a signal terminal **52** that is connected to the signal terminal **51** when the power supply plug **45** is attached to the connector **42**. The signal terminal **52** is connected to the boost converter **48** by a signal line **53**. Hence, when the power supply plug **45** is attached to the connector **42**, a signal is transmitted to the vehicle control unit **24** via the signal line **53**, and relays **54** provided on output lines **49***a*, **49***b* of the boost converter **48** are driven by a signal from the vehicle control unit **24** such that charging is performed on the high voltage battery **16** by the fast charger **46**.

A circuit portion connecting the connector **42** to the high voltage battery **16** via the power supply cables **43***a*, **43***b*, **17***a*, and **17***b* constitutes a second charging circuit **55** for charging the high voltage battery **16** with power supplied from the fast charger **46** serving as an external charger without passing through the on-board charger **25**, and when the power supply plug **45** is connected to the connector **42**, the external fast charger **46** charges the high voltage battery **16** via the second charging circuit **55** in a high speed charging mode.

FIG. **2**A is a perspective view showing an example of the power source plug **35**, and FIG. **2**B is a perspective view showing the connector **32** to which the power source plug **35** is attached. As shown in FIG. **2**A, the two power source terminals **34** provided on the power source plug **35** are each formed from a pole-shaped metallic material having a circular cross-section. As shown in FIG. **2**B, the connection terminals **31** of the connector **32** provided in the vehicle body **10** are formed with fitting holes **31***a* corresponding to the power source terminals **34**, into which the pole-shaped power source terminals **34** are fitted.

FIG. **3**A is a perspective view showing an example of the power supply plug **45**, and FIG. **3**B is a perspective view showing the connector **42** to which the power supply plug **45** is attached. As shown in FIG. **3**A, the two power supply terminals **44** provided on the power supply plug **45** are each formed from a plate-shaped metallic material having a square cross-section, in contrast to the power source terminals **34**, and the signal terminal **52** is formed from a pole-shaped metallic material having a circular cross-section. As shown in FIG. **3**B, the connection terminals **41** and the signal terminal **51** of the connector **42** provided in the vehicle body **10** are formed with fitting holes **41***a*, **51***a* corresponding to the power supply terminals **44** and the signal terminal **52**, into which the power supply terminals **44** and the signal terminal **52** are respectively fitted.

Since the connection terminal **31** and the connection terminal **41** have different shapes, the power source terminal **34** of the power source plug **35** cannot be connected to the connection terminal **41**, and the power supply terminal **44** of the power supply plug **45** cannot be connected to the connection terminal **31**. Note, however, that the respective shapes of the connection terminals **31**, **41** are not limited to the illustrated cases, and may be set arbitrarily as long as they differ from each other such that the power source terminal **34** of the power source plug **35** can only be connected to the connection terminal **31** and the power supply terminal **44** of the power supply plug **45** can only be connected to the connection terminal **41**.

FIG. **4**A is a front view showing the electric vehicle in a state where the high voltage battery is charged from the external power source terminal via the on-board charger **25** by attaching the power source plug **35** to the connector **32**, and FIG. **4**B is a front view showing the electric vehicle in a state where the high voltage battery **16** is charged directly from the fast charger **46** serving as an external charger by attaching the power supply plug **45** to the connector **42**. As shown in FIG. **4**, the vehicle **10** is provided with connector lid members **32***a*, **42***a* covering the connectors **32**, **42** such that when the power source plug **35** is attached to the connector **32**, the lid member **32***a* open, and when the power supply plug **45** is attached to the connector **42**, the lid member **42***a* is open.

As shown in FIGS. **1** to **4**, the two connectors **32**, **42** are provided at a remove from each other such that the power source plug **35** can be attached to the connector **32** and the power supply plug **45** can be attached to the connector **42**. Measures must be taken to ensure that when the power source plug **35** and the power supply plug **45** are both connected to the respective connectors **32**, **42**, the normal charging mode and the high speed charging mode, which are different to each other, are not performed simultaneously. When the power source plug **35** is attached to the connector **32**, information is transmitted from the on-board charger **25** to the vehicle control unit **24** via the communication network **28**, and similarly, when the power supply plug **45** is attached to the connector **42**, information is transmitted from the fast charger **46** to the vehicle control unit **24** via the signal line **53** and the communication network **28**.

On the basis of this information, when the power source plug **35** and the power supply plug **45** are both attached to the two connectors **32**, **42**, the vehicle control unit **24** charges the high voltage battery **16** from only one of the first charging circuit **38** and the second charging circuit **55** and prevents charging of the high voltage battery **16** from both of the charging circuits at the same time. Thus, the vehicle control unit **24** shown in FIG. **1** constitutes charging system switching means. As a method of determining which of the two charging circuits **38**, **55** is to be activated, the plug that is connected first between the power source plug **35** and the power supply plug **45** may be activated such that the high voltage battery **16** is charged by the charging circuit having the connection terminal to which the plug was connected first. As another determination method, the charging circuit having a shorter total charging time between the two charging circuits **38**, **55** may be activated such that the high voltage battery **16** is charged by the charging circuit having the

shorter total charging time. In this method, the remaining capacity of the high voltage battery **16** is calculated, the charging time when charging is performed using the fast charger **46** is compared to the charging time when charging is performed using the on-board charger **25**, and the high voltage battery **16** is charged in the charging mode having the shorter charging time.

FIG. **5** is a flowchart showing an algorithm for determining a charging mode switch. In a step S**1**, a determination is made as to whether or not the power supply terminal **44** of the power supply plug **45** is connected to the connection terminal **41** of the connector **42** such that the fast charging power source is connected, or in other words whether or not the fast charger **46** is connected. When the fast charger **46** is connected, the remaining capacity of the high voltage battery **16** is calculated in a step S**2**, whereupon a determination is made in a step S**3** as to whether or not the normal charging power source is connected, or in other words whether or not the power source plug **35** is connected to the connector **32**. When it is determined in the step S**3** that the normal charging power source is not connected, setting is performed in a step S**4** to activate fast charging and deactivate normal charging, whereupon a charging start flag is switched ON in a step S**5** to begin charging using the fast charger **46**. Charging using the fast charger **46** is continued until a charging end flag is switched ON in a step S**6**. When the charging end flag is switched ON in the step S**6**, charging is stopped in a step S**7**, whereby fast charging is deactivated and normal charging is maintained in a deactivated state.

On the other hand, when it is determined that the fast charger **46** is not connected in the step S**1** and that the normal charging power source is connected in a step S**8**, the remaining capacity of the high voltage battery **16** is calculated in a step S**9**, whereupon setting is performed in a step S**10** to activate normal charging and deactivate fast charging. The charging start flag is then switched ON in a step S**11** to begin normal charging using the on-board charger **25**. Charging using the on-board charger **25** is continued until the charging end flag is switched ON in a step S**12**. When the charging end flag is switched ON in a step S**13**, charging is stopped in a step S**13**, whereby normal charging is deactivated and fast charging is set to a deactivated state.

When it is determined in the step S**3** that the fast charger **46** and the normal charging power source are connected, i.e. when the power source plug **35** is connected to the connector **32** while being connected to an external power source and the power supply plug **45** of the fast charger **46** is connected to the connector **42**, the fast charging time and the normal charging time are calculated in a step S**14**, whereupon the shorter of the fast charging time and the normal charging time is determined in a step S**15**. When it is determined in the step S**15** that the fast charging time is shorter than the normal charging time, fast charging is determined to be active in the step S**4**, whereupon the steps S**5** to S**7** are executed. When it is determined in the step S**15** that the normal charging time is shorter than the fast charging time, on the other hand, normal charging is determined to be active in the step S**10**, whereupon the steps S**11** to S**13** are executed. Note that a charging preparation time is added to the calculation of the respective charging times in the step S**15**.

As a method of determining which of the two charging circuits **38**, **55** to activate, in the method for activating the plug connected first between the power source plug **35** and the power supply plug **45** and charging the high voltage battery **16** using the charging circuit having the connection terminal to which the plug was connected first, the charging start flag for activating fast charging is switched ON when the fast charger **46** is connected, and when the normal charging power source is connected in this state, the charging start flag is switched ON. In so doing, charging using the normal charging power source is prevented.

FIG. **6** is a schematic diagram showing an electric vehicle having a charging device according to another embodiment of the present invention. In FIG. **6**, identical members to those shown in FIG. **1** have been allocated identical reference symbols.

An aggregate connector **61** is provided on one side face of the rear end portion side of the vehicle body **10**, for example, and the first connection terminals **31**, which are connected to the on-board charger **25** via the power supply cables **33**, and the second connection terminals **41**, which are connected to the power supply cables **17***a*, **17***b* via the power supply cables **43***a*, **43***b*, are disposed collectively in the aggregate connector **61**. By means of these connection terminals, an aggregate connection terminal is formed. Further, the aggregate connector **61** is provided with the signal terminal **51**, which is connected to the vehicle control unit **24** by a communication line.

The power source plug **35** provided with the connection plug **37**, which is connected detachably to an external power source terminal, takes the shape shown in FIG. **2**A, while the power supply plug **45** connected to the output terminal of the fast charger **46** via the power supply cables **47***a*, **47***b* takes the shape shown in FIG. **3**A. Hence, the power source terminal **34** of the power source plug **35** and the power supply terminal **43** of the power supply plug **45** are shaped differently.

FIG. **7** is a perspective view showing the aggregate connector **61** shown in FIG. **6**. The aggregate connector **61** is formed in such a size and shape that when one of the power source plug **35** of the external power source and the power supply plug **45** of the fast charger **46** is connected thereto, the other cannot be connected. In other words, the size of the aggregate connector **61** substantially corresponds to the size of the respective plugs.

As shown in FIG. **7**, the connection terminals **31** provided on the aggregate connector **61** are formed with the fitting holes **31***a* into which the pole-shaped power source terminals **34** are fitted, while the connection terminals **41** and the signal terminal **51** provided on the aggregate connector **61** are formed with the fitting holes **41***a*, **51***a* into which the plate-form power supply terminals **44** and the pole-shaped signal terminal **52** are respectively fitted. Hence, the respective fitting holes **31***a*, **41***a*, **51***a* have different shapes and are formed at an offset from one another. Therefore, when the power source plug **35** is attached to the aggregate connector **61** to connect the connection terminals **31** to the power source terminals **34**, the connection terminals **41** and the signal terminal **51** are covered by the power source plug **35**, and on the basis of this state, the power supply plug **45** cannot be attached to the aggregate connector **61**. Similarly, when the power supply plug **45** is attached to the aggregate connector **61** to connect the connection terminals **41** to the power supply terminals **44**, the connection terminals **31** are covered by the power supply plug **45**, and on the basis of this state, the power source plug **35** cannot be attached to the aggregate connector **61**.

When the power source plug **35** is attached to the aggregate connector **61**, power supplied from the external power source is charged to the high voltage battery **16** through the connection terminals **31** via the first charging circuit **38**. When the power supply plug **45** is attached to the aggregate connector **61**, on the other hand, power supplied from the fast charger **46** is charged to the high voltage battery **16** through the connection terminals **41** via the second charging circuit **55**. Thus, the aggregate connector **61** charges the high voltage battery **16**

from only one of the two charging circuits **38**, **55**, and therefore constitutes charging system switching means for preventing simultaneous charging from both charging circuits **38**, **55**. As described above, the aggregate connector **61** serving as charging system switching means constitutes an aggregate connection terminal that is incapable of connecting the power source terminals **34** of the external power source to the connection terminals **31** and connecting the power supply terminals **44** of the fast charger **46** to the connection terminals **41** at the same time.

When the power source plug **35** is connected, the output of the on-board charger **25** is controlled on the basis of information transmitted from the on-board charger **25** to the vehicle control unit **24**, and when the power supply plug **45** is connected, the output of the boost converter **48** is controlled on the basis of information transmitted from the boost converter **48** to the vehicle control unit **24**.

The present invention is not limited to the embodiments described above, and may be subjected to various modifications within a scope that does not depart from the spirit thereof. For example, the positions of the respective connectors **32**, **42** are not limited to the positions shown in FIG. **4**, and the position of the aggregate connector **61** is not limited to the position described above. Instead, the connector **32** may be provided on the rear end portion of the vehicle. Further, in the illustrated electric vehicle, the front wheels **11** serve as drive wheels, but the rear wheels **12** may also be drive wheels. Moreover, a lithium ion battery is used as the high voltage battery **16**, but another type of secondary battery, for example an electrochemical capacitor such as an electric double layer capacitor, may be used instead. Furthermore, an electric vehicle in which an electric motor serves as the sole drive source was described in the above embodiments, but the present invention may also be applied to a hybrid-type electric vehicle having an engine in addition to an electric motor.

What is claimed is:

1. A charging device for an electric vehicle, which charges a storage device for supplying electric power to an electric motor for driving the electric vehicle, and includes a first charging circuit for charging electric power supplied from an external power source to said storage device via an on-board charger and a second charging circuit for charging electric power supplied from an external charger to said storage device without passing through said on-board charger, said charging device comprising:

a first connection terminal connected to said first charging circuit, which establishes a connection with said external power source;

a second connection terminal connected to said second charging circuit, which establishes a connection with said external charger and has a different shape to said first connection terminal and includes a signal terminal for supplying a signal and a power terminal for supplying the charging electric power from the external charger; and

a charging system switching control circuit for charging said storage device, such that the charging system switching control circuit is configured so as to activate one of the first connection terminal and the second connection terminal based at least partially on a determination that the first connection terminal is connected to said external power source and the second connection terminal is connected to said external charger so as to charge the storage device from only one of said first charging circuit and said second charging circuit and preventing simultaneous charging from both said first charging circuit and said second charging circuit,

wherein, when said external power source is connected to said first connection terminal and said external charger is connected to said second connection terminal, the charging system switching control circuit activates one of the first connection terminal and the second connection terminal based at least partially on the signal from the signal terminal.

2. A charging device for an electric vehicle, which charges a storage device for supplying electric power to an electric motor for driving the electric vehicle, and includes a first charging circuit for charging electric power supplied from an external power source to said storage device via an on-board charger and a second charging circuit for charging electric power supplied from an external charger to said storage device without passing through said on-board charger, said charging device comprising:

a first connection terminal connected to said first charging circuit, which establishes a connection with said external power source;

a second connection terminal connected to said second charging circuit, which establishes a connection with said external charger and has a different shape to said first connection terminal; and

charging system switching means for charging said storage device from only one of said first charging circuit and said second charging circuit and preventing simultaneous charging from both said first charging circuit and said second charging circuit,

wherein, when said external power source is connected to said first connection terminal and said external charger is connected to said second connection terminal, said charging system switching means activates the connection terminal connected first such that said charging device is charged by the charging circuit having the connection terminal connected first.

3. A charging device for an electric vehicle, which charges a storage device for supplying electric power to an electric motor for driving the electric vehicle, and includes a first charging circuit for charging electric power supplied from an external power source to said storage device via an on-board charger and a second charging circuit for charging electric power supplied from an external charger to said storage device without passing through said on-board charger, said charging device comprising:

a first connection terminal connected to said first charging circuit, which establishes a connection with said external power source;

a second connection terminal connected to said second charging circuit, which establishes a connection with said external charger and has a different shape to said first connection terminal; and

charging system switching means for charging said storage device from only one of said first charging circuit and said second charging circuit and preventing simultaneous charging from both said first charging circuit and said second charging circuit,

wherein, when said external power source is connected to said first connection terminal and said external charger is connected to said second connection terminal, said charging system switching means activates the charging circuit having a shorter total charging time, from among said first charging circuit and said second charging circuit, such that said charging device is charged by the charging circuit having the shorter total charging time.

4. The charging device for an electric vehicle according to claim **1**, wherein the charging system switching control cir-

cuit electrically activates one of said first charging circuit and said second charging circuit based on a predetermined criterion.

5. The charging device for an electric vehicle according to claim **1**, wherein the first connection terminal and the second connection terminal are disposed so as enable the first connection terminal and the second connection terminal to be connected to said external power source and said external charger, respectively, simultaneously.

6. The charging device for an electric vehicle according to claim **1**, wherein the charging system switching control circuit comprises a vehicle control unit.

7. The charging device for an electric vehicle according to claim **1**, wherein the charging system switching control circuit comprises an electrical switching means for selecting one of said first charging circuit and said second charging circuit.

8. The charging device for an electric vehicle according to claim **1**, wherein the charging system switching control circuit activates one of said first charging circuit and said second charging circuit when the first connection terminal is connected to the external power source and the second connection terminal is connected to the external charger.

9. The charging device for an electric vehicle according to claim **1**, wherein the determination is based at least partially on a signal indicating that the first connection terminal is connected to the external power source and a signal indicating that the second connection terminal is connected to the external charger.

10. The charging device for an electric vehicle according to claim **1**, wherein the charging system switching control circuit activates one of the first connection terminal and the second connection terminal based at least partially on a factor other than the determination that the first connection terminal is connected to said external power source and the second connection terminal is connected to said external charger.

* * * * *