US005367558A

United States Patent [19]

Gillig et al.

[11] Patent Number: 5,367,558

[45] Date of Patent: Nov. 22, 1994

[54] CELLULAR CORDLESS TELEPHONE

[75] Inventors: **Steven F. Gillig**, Roselle; **Glen E. Pederson**, St. Charles, both of Ill.

[73] Assignee: **Motorola, Inc.**, Schaumburg, Ill.

[21] Appl. No.: **203,711**

[22] Filed: **Feb. 28, 1994**

Related U.S. Application Data

[60] Continuation of Ser. No. 103,169, Aug. 6, 1993, abandoned, which is a continuation of Ser. No. 826,322, Jan. 22, 1992, abandoned, which is a division of Ser. No. 660,180, Feb. 19, 1991, Pat. No. 5,127,042, which is a continuation of Ser. No. 516,375, Apr. 30, 1990, abandoned, which is a division of Ser. No. 249,041, Sep. 23, 1988, Pat. No. 4,989,230.

[51] **Int. Cl.**[5] **H04M 11/00**

[52] **U.S. Cl.** **379/59**; 379/58

[58] **Field of Search** 370/24; 379/56, 58, 379/59, 61, 63; 455/7, 11.1, 73, 89

[56] **References Cited**

U.S. PATENT DOCUMENTS

4,989,230	1/1991	Gillig et al.	379/59
5,117,449	5/1992	Metroka et al.	379/58
5,127,042	6/1992	Gillig et al.	379/59
5,212,684	5/1993	MacNamee et al.	370/24

Primary Examiner—Curtis Kuntz
Assistant Examiner—William Cumming
Attorney, Agent, or Firm—Rolland R. Hackbart

[57] **ABSTRACT**

A cellular cordless telephone (**10**) operates with both a cordless base station (**180**) and a cellular base station (**190**) and cellular control terminal (**196**). In one embodiment (FIG. **2**), a cellular cordless telephone (**100**) includes a cellular transceiver (**120**), antenna (**128**), keyboard (**140**), a display (**180**), handset (**160**), and microcomputer (**130**) together with a cordless transceiver (**110**) and antenna (**118**), all of which may be in a single housing. In another embodiment (FIG. **3**), a cellular cordless telephone (**200**) includes a cellular telephone (**220**) and a cordless telephone transceiver (**210**) which may be a plugable module. Whenever cellular cordless telephone (**10**) is within range of cordless base station (**180**), telephone calls may be made over the cordless radio channel or transferred from the cellular radio channels to the cordless radio channel. If the cellular cordless telephone (**10**) thereafter moves out of range of the cordless base station (**180**), telephone calls may be made over the cellular radio channels or transferred from the cordless radio channel to one of the cellular telephone channels.

8 Claims, 7 Drawing Sheets

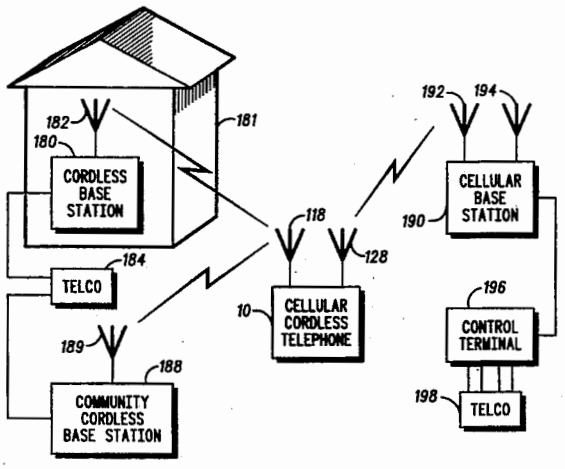

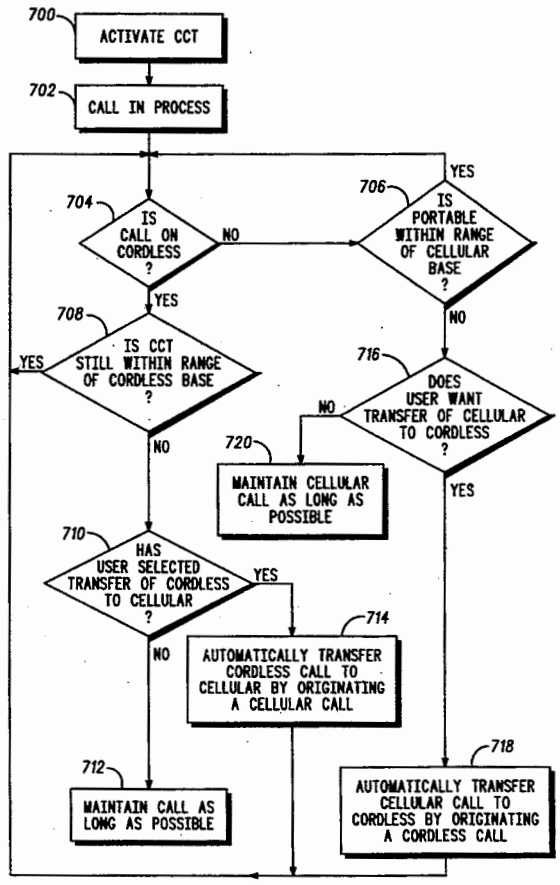

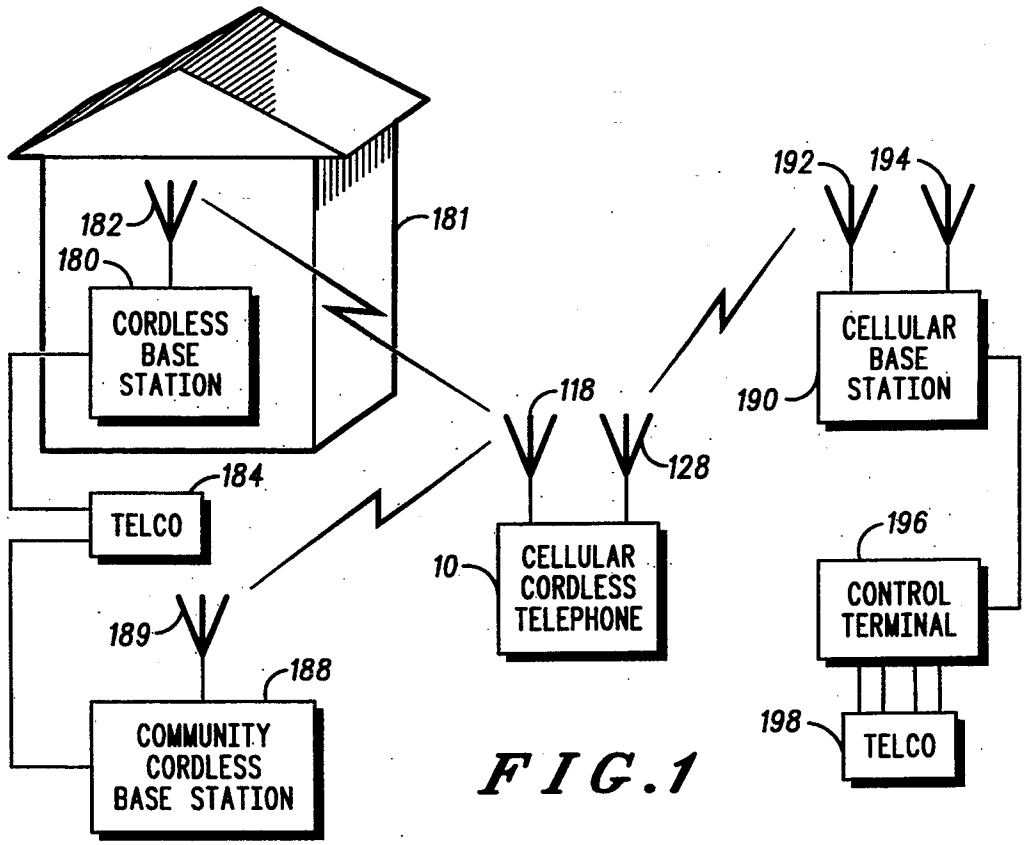
182
180
181
CORDLESS BASE STATION
184
TELCO
189
188
COMMUNITY CORDLESS BASE STATION
118
128
10
CELLULAR CORDLESS TELEPHONE
192
194
CELLULAR BASE STATION
190
196
CONTROL TERMINAL
198
TELCO

FIG. 1

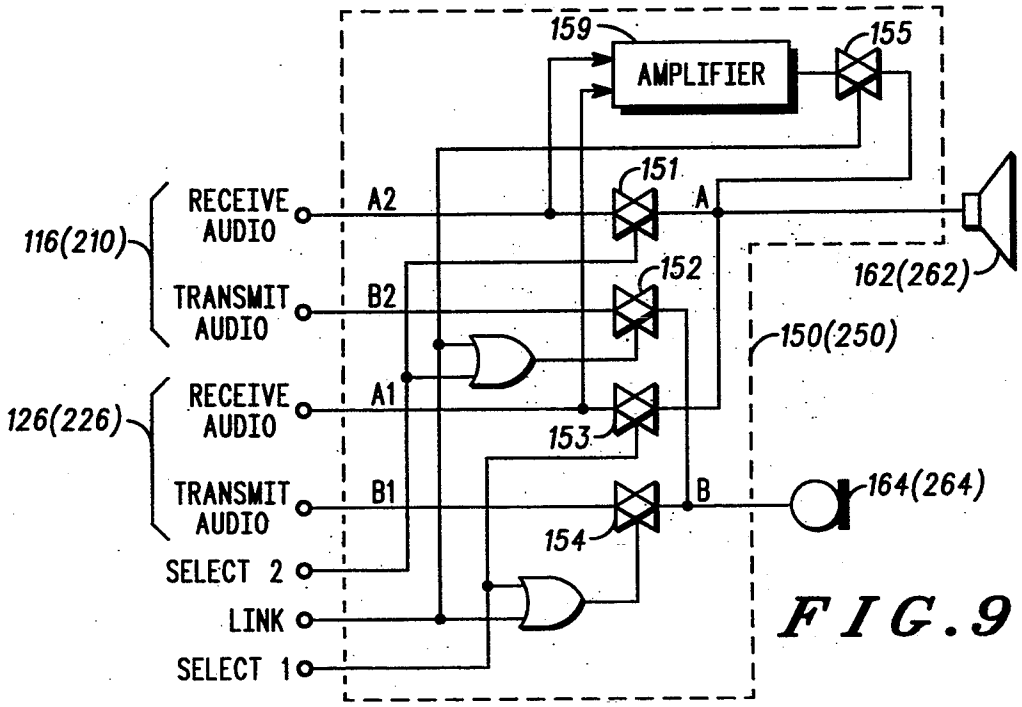
159
AMPLIFIER
155
151
152
153
154
A
B
A2
B2
A1
B1
RECEIVE AUDIO
TRANSMIT AUDIO
RECEIVE AUDIO
TRANSMIT AUDIO
116(210)
126(226)
SELECT 2
LINK
SELECT 1
150(250)
162(262)
164(264)

FIG. 9

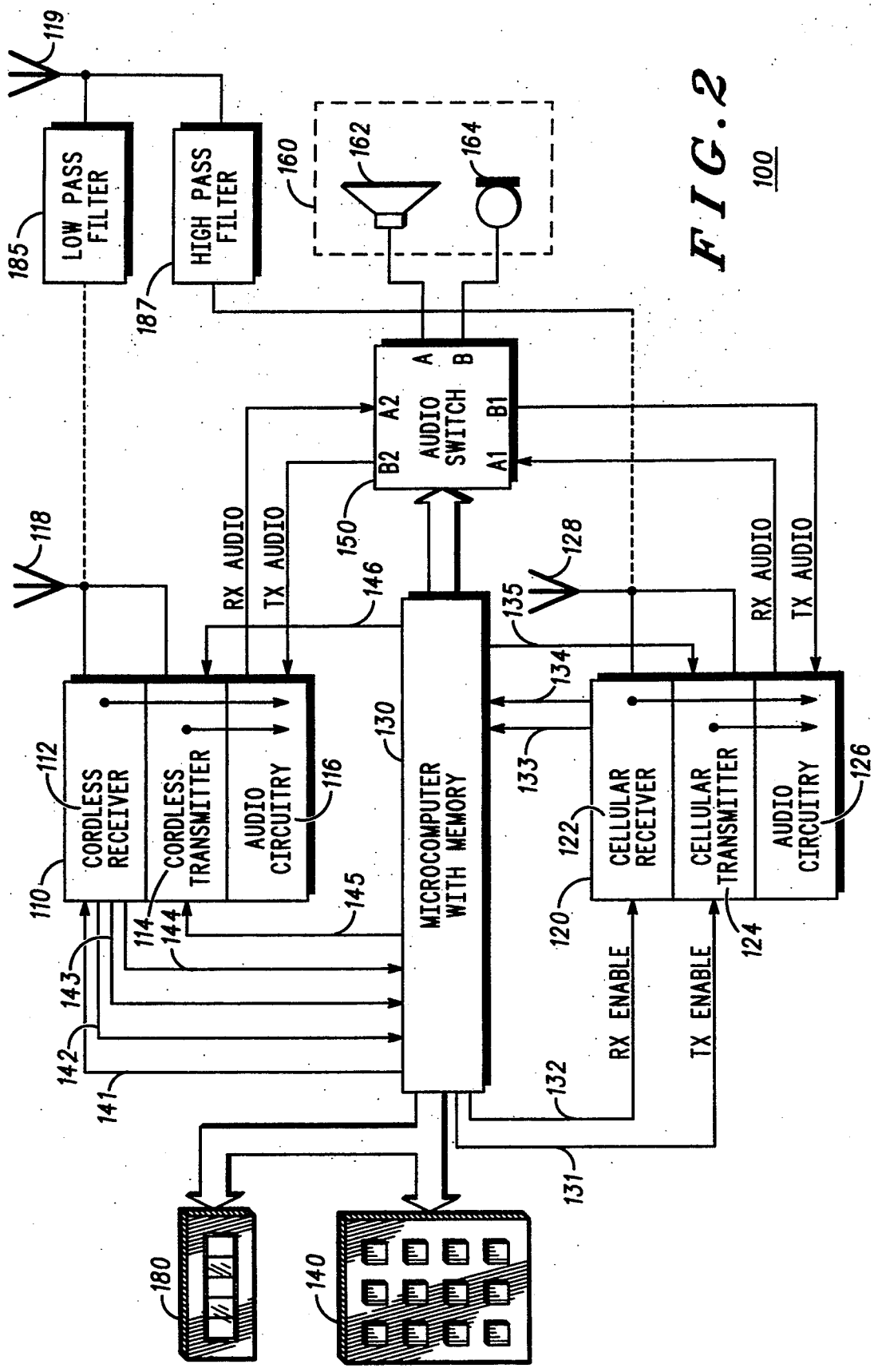
LOW PASS FILTER
HIGH PASS FILTER
AUDIO SWITCH
A
B
A1
B1
A2
B2
RX AUDIO
TX AUDIO
CORDLESS RECEIVER
CORDLESS TRANSMITTER
AUDIO CIRCUITRY
MICROCOMPUTER WITH MEMORY
CELLULAR RECEIVER
CELLULAR TRANSMITTER
AUDIO CIRCUITRY
RX ENABLE
TX ENABLE
100
110
112
114
116
118
119
120
122
124
126
128
130
131
132
133
134
135
140
141
142
143
144
145
146
150
160
162
164
180
185
187

FIG. 2

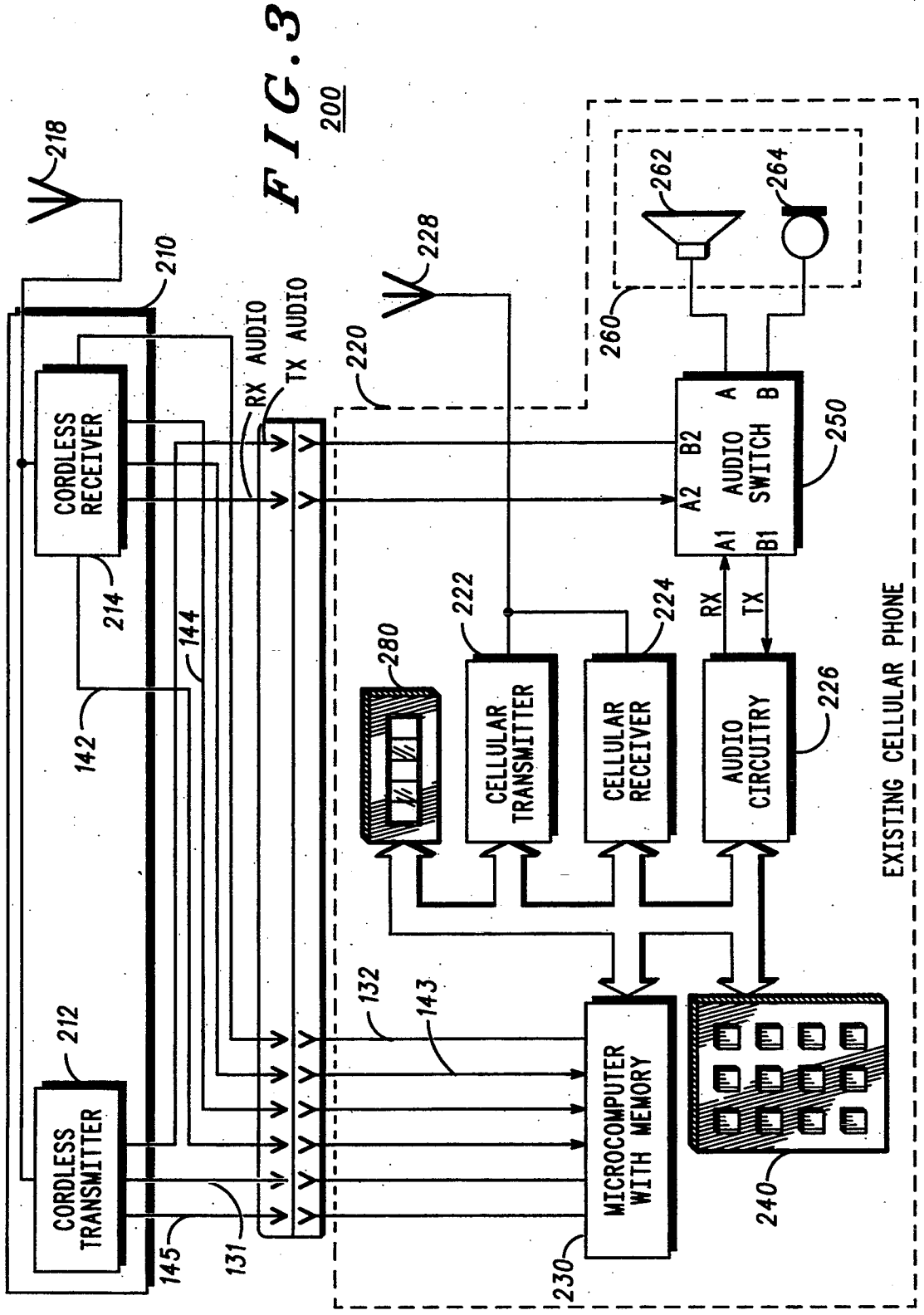
CORDLESS RECEIVER
CORDLESS TRANSMITTER
RX AUDIO
TX AUDIO
AUDIO SWITCH
A
B
A1
B1
A2
B2
RX
TX
CELLULAR TRANSMITTER
CELLULAR RECEIVER
AUDIO CIRCUITRY
MICROCOMPUTER WITH MEMORY
EXISTING CELLULAR PHONE
200
210
212
214
218
220
222
224
226
228
230
240
250
260
262
264
280
131
132
142
143
144
145

FIG. 3

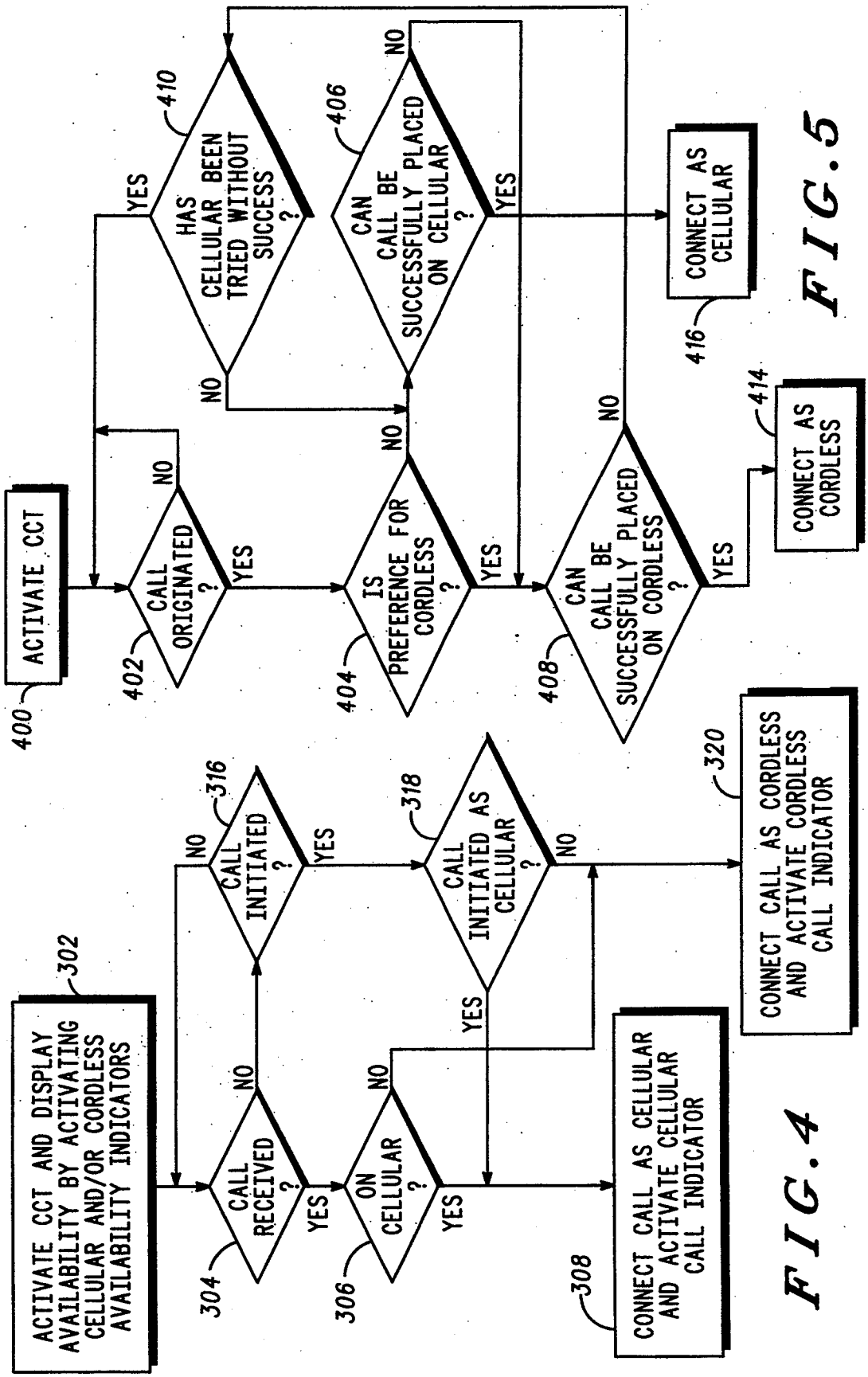
ACTIVATE CCT AND DISPLAY AVAILABILITY BY ACTIVATING CELLULAR AND/OR CORDLESS AVAILABILITY INDICATORS
302
CALL RECEIVED ?
304
YES
NO
ON CELLULAR ?
306
YES
NO
CONNECT CALL AS CELLULAR AND ACTIVATE CELLULAR CALL INDICATOR
308
CALL INITIATED ?
316
YES
NO
CALL INITIATED AS CELLULAR ?
318
YES
NO
CONNECT CALL AS CORDLESS AND ACTIVATE CORDLESS CALL INDICATOR
320
ACTIVATE CCT
400
CALL ORIGINATED ?
402
YES
NO
IS PREFERENCE FOR CORDLESS ?
404
YES
NO
CAN CALL BE SUCCESSFULLY PLACED ON CELLULAR ?
406
YES
NO
HAS CELLULAR BEEN TRIED WITHOUT SUCCESS ?
410
YES
NO
CAN CALL BE SUCCESSFULLY PLACED ON CORDLESS ?
408
YES
NO
CONNECT AS CORDLESS
414
CONNECT AS CELLULAR
416

FIG. 4

FIG. 5

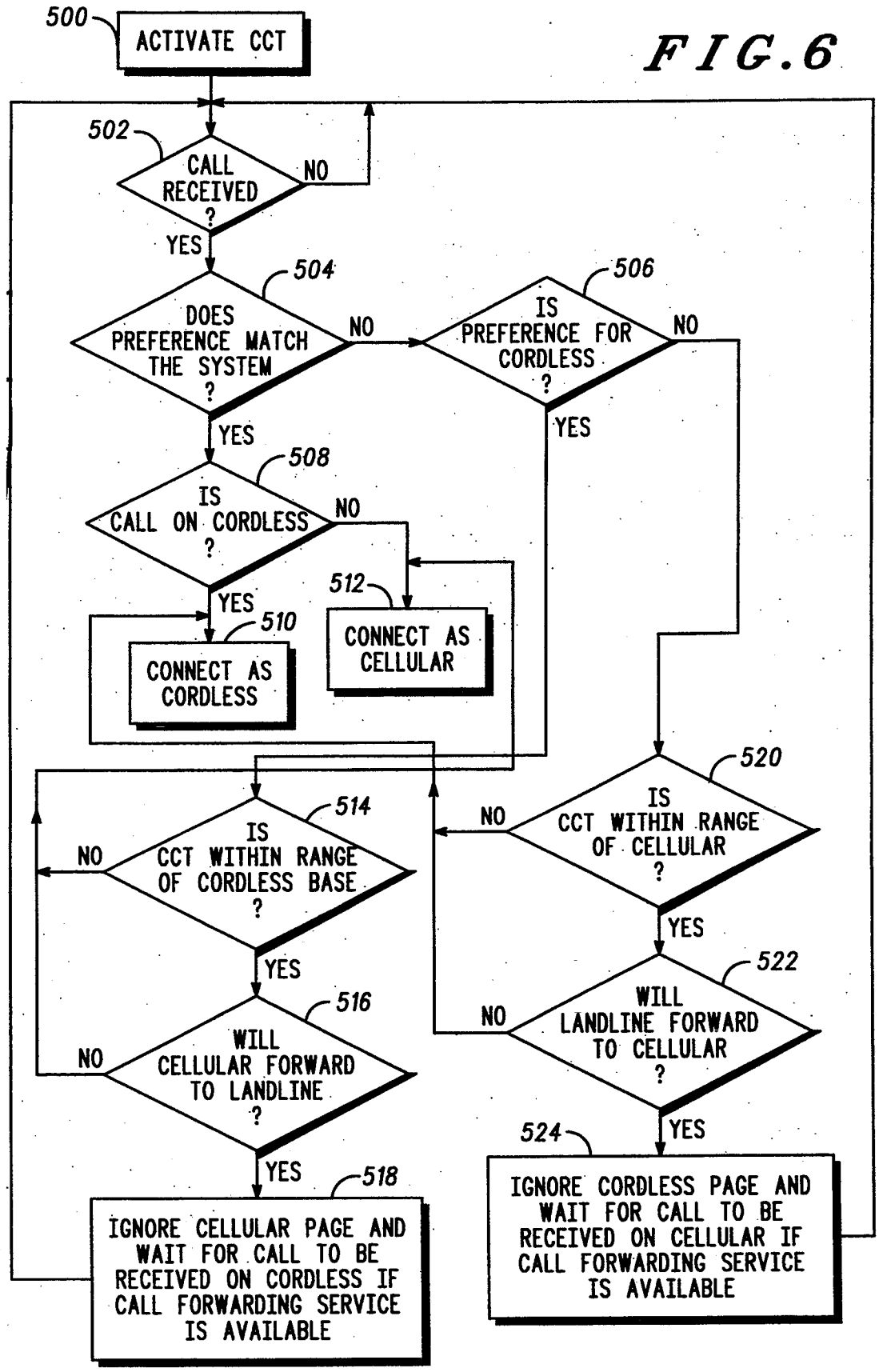
500
ACTIVATE CCT
FIG.6
502
CALL RECEIVED ?
NO
YES
504
DOES PREFERENCE MATCH THE SYSTEM ?
NO
YES
506
IS PREFERENCE FOR CORDLESS ?
NO
YES
508
IS CALL ON CORDLESS ?
NO
YES
510
CONNECT AS CORDLESS
512
CONNECT AS CELLULAR
514
IS CCT WITHIN RANGE OF CORDLESS BASE ?
NO
YES
516
WILL CELLULAR FORWARD TO LANDLINE ?
NO
YES
518
IGNORE CELLULAR PAGE AND WAIT FOR CALL TO BE RECEIVED ON CORDLESS IF CALL FORWARDING SERVICE IS AVAILABLE
520
IS CCT WITHIN RANGE OF CELLULAR ?
NO
YES
522
WILL LANDLINE FORWARD TO CELLULAR ?
NO
YES
524
IGNORE CORDLESS PAGE AND WAIT FOR CALL TO BE RECEIVED ON CELLULAR IF CALL FORWARDING SERVICE IS AVAILABLE

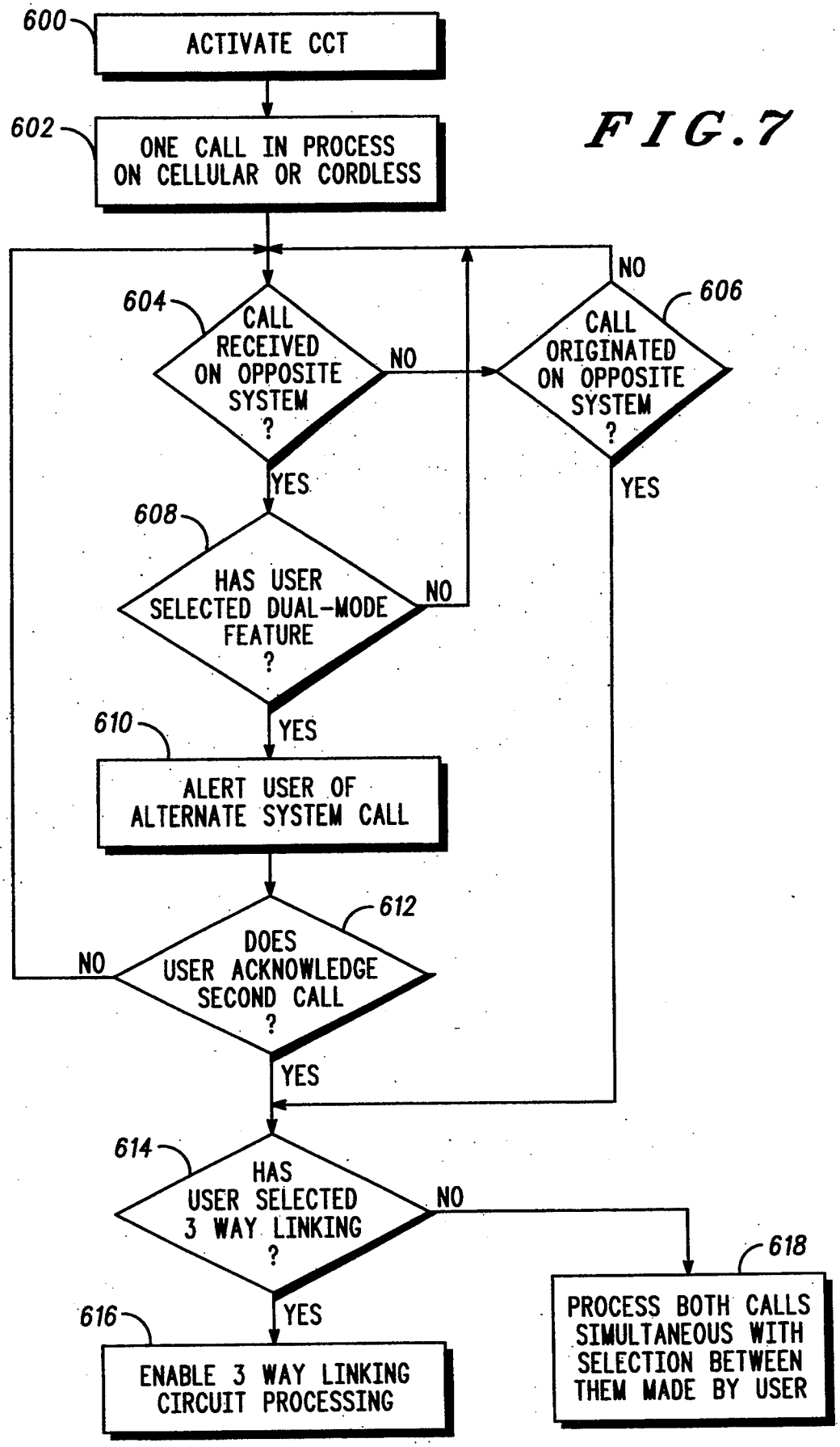
600
ACTIVATE CCT
602
ONE CALL IN PROCESS ON CELLULAR OR CORDLESS
604
CALL RECEIVED ON OPPOSITE SYSTEM ?
NO
YES
606
CALL ORIGINATED ON OPPOSITE SYSTEM ?
NO
YES
608
HAS USER SELECTED DUAL-MODE FEATURE ?
NO
YES
610
ALERT USER OF ALTERNATE SYSTEM CALL
612
DOES USER ACKNOWLEDGE SECOND CALL ?
NO
YES
614
HAS USER SELECTED 3 WAY LINKING ?
NO
YES
616
ENABLE 3 WAY LINKING CIRCUIT PROCESSING
618
PROCESS BOTH CALLS SIMULTANEOUS WITH SELECTION BETWEEN THEM MADE BY USER

FIG. 7

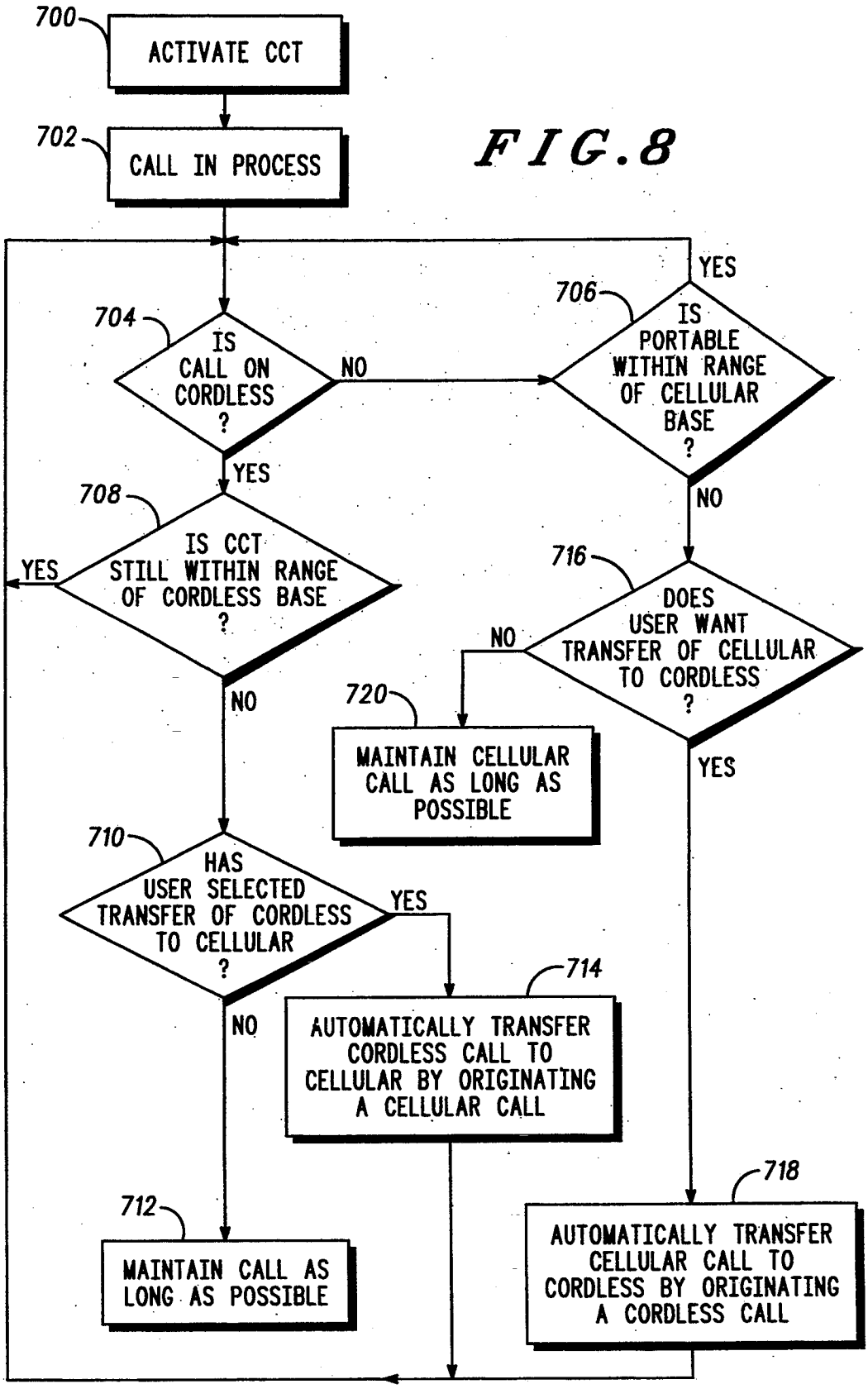
700
ACTIVATE CCT
702
CALL IN PROCESS
704
IS CALL ON CORDLESS ?
NO
YES
706
IS PORTABLE WITHIN RANGE OF CELLULAR BASE ?
YES
NO
708
IS CCT STILL WITHIN RANGE OF CORDLESS BASE ?
YES
NO
716
DOES USER WANT TRANSFER OF CELLULAR TO CORDLESS ?
NO
YES
720
MAINTAIN CELLULAR CALL AS LONG AS POSSIBLE
710
HAS USER SELECTED TRANSFER OF CORDLESS TO CELLULAR ?
YES
NO
714
AUTOMATICALLY TRANSFER CORDLESS CALL TO CELLULAR BY ORIGINATING A CELLULAR CALL
712
MAINTAIN CALL AS LONG AS POSSIBLE
718
AUTOMATICALLY TRANSFER CELLULAR CALL TO CORDLESS BY ORIGINATING A CORDLESS CALL

FIG. 8

CELLULAR CORDLESS TELEPHONE

This is a continuation of application Ser. No. 08/103,169, filed Aug. 6, 1993 and now abandoned, which is a continuation of application Ser. No. 07/826,322, filed Jan. 22, 1992 and now abandoned, which is a division of application Ser. No. 07/660,180 filed Feb. 25, 1991 and now U.S. Pat. No. 5,127,042, which is a continuation of Ser. No. 07/516,375 filed Apr. 30, 1990 and now abandoned, which in turn is a division of application Ser. No. 07/249,041 filed on Sep. 23, 1988 and now U.S. Pat. No. 4,989,230.

BACKGROUND OF THE INVENTION

The present invention is generally related to cellular telephones and more particularly to an improved cellular cordless telephone for providing both cellular and cordless telephone services.

In the prior art, cordless telephones typically are used in the home to allow the user to place and receive telephone calls at any point throughout the house. Such cordless telephones are connected to the user's telephone landline. However, due to their limited range, such cordless telephones are not suitable for use in vehicles. Vehicular communications are typically achieved by means of radio telephone systems, the most prevalent being cellular telephone systems. A cellular telephone allows the user to place and receive telephone calls at any point throughout a large metropolitan area. However, the cost of a cellular telephone call is as much as seven times the cost of a cordless telephone call, since cordless telephone calls are made by way of the user's telephone landline and cost the same as landline telephone calls, while cellular telephone calls are made by way of expensive cellular base stations and cellular switching equipment and cost much more than landline telephone calls.

OBJECTS OF THE INVENTION

Accordingly, it is an object of the present invention to provide an improved cellular cordless telephone that may place both cellular telephone calls and cordless telephone calls.

It is another object of the present invention to provide an improved cellular cordless telephone that automatically operates as a cordless telephone whenever it is in range of its corresponding cordless base station.

BRIEF DESCRIPTION OF THE DRAWINGS

FIG. **1** is a block diagram of a cellular cordless telephone system embodying the present invention.

FIG. **2** is a block diagram of a cellular cordless telephone embodying the present invention.

FIG. **3** is a block diagram of another embodiment of a cellular cordless telephone according to the present invention.

FIG. **4** is a flow chart for the process used by the cellular cordless telephones in FIGS. **2** and **3** for placing and receiving cellular and cordless telephone calls.

FIG. **5** is a flow chart for the process used by the cellular cordless telephones in FIGS. **2** and **3** for originating a telephone call as a cellular telephone call or a cordless telephone call according to user selectable preference.

FIG. **6** is a flow chart for the process used by the cellular cordless telephones in FIGS. **2** and **3** for receiving a telephone call as a cellular telephone call or a cordless telephone call according to user selectable preference.

FIG. **7** is a flow chart for the process used by the cellular cordless telephones in FIGS. **2** and **3** for simultaneously processing both a cellular telephone call and a cordless telephone call and three-way linking both calls.

FIG. **8** is a flow chart for the process used by the cellular cordless telephones in FIGS. **2** and **3** for automatically transfering between a cellular telephone call and a cordless telephone call.

FIG. **9** is a block diagram of audio switch **150** in the cellular cordless telephone in FIG. **2**.

DESCRIPTION OF THE PREFERRED EMBODIMENT

In FIG. **1**, there is illustrated a block diagram of a cellular cordless telephone system embodying the present invention. The system includes a telephone company phone system (TELCO) **184**, connected by telephone landlines to a cordless base station **180** having a landline telephone number located in a home or office **181** and to a community cordless base station **188** having a landline telephone number in another office, building, or other geographical location. Cordless base stations **180** and **188** communicate with the cellular cordless telephone (CCT) **10** through antennas **182** and **189**. Antennas **182** and **189** may be implemented as telescoping whip antennas. Cordless base stations **180** and **188** may be any conventional cordless base station, such as, for example, the base station shown and described in Panasonic operating instructions, entitled "Cordless-phone Model No. KX-T3000 EASA-PHONE", published by and available from the Panasonic Company, One Panasonic Way, Secaucus, N.J., 07094. Additional community cordless base stations **188** may be located throughout a metropolitan area for providing shared telephone service to CCTs **10**. In this case, cordless base station **188** may include additional equipment for billing calls to the cellular telephone number of CCT **10**.

Also connected through telephone landlines to the same or a different telephone company phone system (TELCO) **198** is the cellular control terminal **196** (see U.S. Pat. No. 4,268,722) with its associated cellular base station(s) **190** (see U.S. Pat. No. 4,485,486 incorporated herein by reference). Cellular base station **190** incorporates both a receive antenna **192** and a transmit antenna **194** (see U.S. Pat. No. 4,369,520 incorporated herein by reference) for communicating with CCTs **10**.

CCT **10** may be a mobile unit installed in a vehicle, a transportable unit which is a mobile unit and battery installed in a carrying case, or a hand-held portable unit. CCT **10** includes an antenna **118** for the cordless radio channels and an antenna **128** for the cellular radio channels as illustrated by the embodiment of CCT **200** in FIG. **3**, or may include a single antenna, is illustrated by the embodiment of CCT **100** in FIG. **2**. In the U.S.A., the cordless radio channels are in the frequency band from 46–49 mHz and the cellular radio channels are in the frequency band from 824–894 mHz.

In FIG. **2**, there is illustrated a detailed block diagram of a first embodiment of a CCT **100** according to the present invention. CCT **100** includes a cordless telephone transceiver **110**, antenna **118**, cellular telephone transceiver **120**, antenna **128**, microcomputer **130** with memory, keypad **140**, display **180**, audio switch **150**, and handset **160** including speaker **162** and microphone **164**. Alternatively, as shown by dashed-lines in FIG. **2**, cord-

less telephone transceiver **110** and cellular telephone transceiver **120** may be coupled to a single antenna **119** in place of antennas **118** and **128** by way of low-pass filter **185** and high-pass filter **187**, respectively. Cordless telephone transceiver **110** may be any conventional cordless telephone transceiver, such as, for example the transceiver shown and described in the aforementioned Panasonic operating instructions, entitled "Cordlessphone Model No. KX-T3000 EASA-PHONE". Cellular telephone transceiver **120**, microcomputer **130**, keypad **140**, and handset **160** likewise may be any commercially available cellular transceiver, such as, for example, the transceiver shown and described in Motorola instruction manual number 68P81049E55, entitled "DYNATAC Cellular Mobile Telephone", published by and available from Motorola C & E Parts, 1313 East Algonquin Road, Schaumburg, Ill. 60196.

Referring to FIG. **9**, audio switch **150** may be implemented with two-to-one multiplexing analog switches **151–155** which select between audio signals of audio circuitry **116** in cordless transceiver **110** and audio circuitry **126** in cellular transceiver **120** under control of select signals SELECT1, SELECT2 and LINK from microcomputer **130**. Select signal SELECT2 enables switches **151** and **152** when it has a binary one state, select signal SELECT1 enables switches **153** and **154** when it has a binary one state, and select signal LINK enables switches **152**, **154** and **155** when it has a binary one state. Depending on which is enabled, analog switches **151** and **153** couple speaker **162** to receive audio from audio circuitry **116** and audio circuitry **126**, respectively. Similarly, depending on which is enabled, analog switches **152** and **154** couple microphone **164** to transmit audio of audio circuitry **116** and audio circuitry **126**, respectively. If three-way linking is selected, analog switches **152** and **154** couple microphone **164** to transmit audio of both audio circuitry **116** and audio circuitry **126**, and analog switch **155** couples speaker **162** to receive audio of both audio circuitry **116** and audio circuitry **126** by way of summing amplifier **159**.

Referring to CCT **100** in FIG. **2**, microcomputer **130** is programmed in accordance with FIGS. **4–8** for operating as a cellular telephone, a cordless telephone, or a cellular cordless telephone. That is, according to the present invention, CCT **100** may simultaneously operate as a cellular telephone and a cordless telephone. When operating as a cellular telephone, control signals **131** TX ENABLE and **132** RX ENABLE of microcomputer **130** enable cellular transmitter **124** and cellular receiver **122**, respectively. In addition to control signals **131** and **132** to cellular transceiver **120**, microcomputer **130** also monitors control signals **133** RSSI, **134** RX DATA and **135** TX DATA for detecting signal strength, for detecting receive data and for sending transmit data, respectively, used in operation of cellular transceiver **120**. When operating as a cordless telephone, control signals **141** and **146** of microcomputer **130** enable cordless receiver **112** and cordless transmitter **114**, respectively. In addition to control signals **141** and **146** to cordless transceiver **110**, microcomputer **130** also monitors control signals **142** SIGNAL QUALITY, **143** RING, **144** RX SECURITY CODE and **145** TX SECURITY CODE for detecting signal strength, ringing, and the receive security code, and for sending the transmit security code and dialed digits, respectively, used in operation of cordless transceiver **110**. Dialed digits may also be encoded by keypad **140** as conventional multi-frequency tones which are coupled to transmit audio of cordless transceiver **110** by audio switch **150** during cordless operation.

Referring next to FIG. **3**, there is illustrated a block diagram of another embodiment of a cellular cordless telephone (CCT) **200** according to the present invention. CCT **200** includes a cordless telephone transceiver **210** in a separate housing with antenna **218** and connector **270**, and a cellular telephone **220** in a separate housing with antenna **228** and connector **272**. Cordless telephone transceiver **210** may be a plug-in accessory which couples via connectors **270** and **272** to cellular telephone **220**. When cordless telephone transceiver **210** is plugged into microcomputer **230** of cellular telephone **220**, it operates in accordance with FIGS. **4–8**. Cellular telephone **220** includes cellular transmitter **222**, cellular receiver **224**, microcomputer **230** with memory, keypad **240**, display **280**, audio circuitry **226**, audio switch **250** and handset **260** including speaker **262** and microphone **264**. Cordless telephone transceiver **210** may be any conventional cordless telephone transceiver, such as, for example the transceiver shown and described in the aforementioned Panasonic operating instructions, entitled "Cordlessphone Model No. KX-T3000 EASA-PHONE". Cellular telephone **220** likewise may be any commercially available cellular transceiver, such as, for example, the transceiver shown and described in the aforementioned Motorola instruction manual number 68P81049E55, entitled "DYNATAC Cellular Mobile Telephone".

Microcomputer **230** of cellular telephone **220** is coupled to the cordless telephone transceiver **210** via the same control signals used in FIG. **2**. These control signals are TX/RX enable signals **131/132**, signal quality signal **142**, ring signal **143** and TX/RX security code signals **145/144**.

Audio circuitry **226** of cellular telephone **220** is coupled to audio switch **250** which can be implemented with two-to-one multiplexing analog switches (see FIG. **9**) which select between audio signals from audio circuitry **226** and cordless telephone transceiver **210**.

Referring now to FIG. **4**, there is illustrated a flow chart for the process used by the CCTs **100** and **200** in FIGS. **2** and **3**, respectively, for placing and receiving cellular and cordless telephone calls. Entering at block **302**, the user activates the CCT. The microcomputer **130** and **230** monitors both the cellular and cordless systems for availability thereof and for incoming and outgoing calls. If the cellular system and/or cordless system are available, a corresponding availability indicator is enabled in display **180** and **280**. In cellular systems, the microcomputer scans pre-selected signalling channels to determine if cellular service is available. Next, at decision block **304**, a check is made to determine if a call has been received. If not, NO branch is taken to decision block **316** to determine if a call has been initiated by the user of the CCT. If not, NO branch is taken back to block **304** to continue monitoring both the cellular and cordless systems for telephone calls.

Returning to decision block **304**, if an incoming call has been received, YES branch is taken to decision block **306** where a check is made to determine if the incoming call is a cellular call. If so, YES branch is taken to block **308** where a cellular call indicator is activated or entered in display **180** and **280**, and the incoming call is connected as a cellular call (e.g., in FIG. **2**, cellular transceiver **120** is enabled by microcomputer **130**). If the incoming call is not a cellular call, NO branch is taken from block **306** to block **320**

where a cordless call indicator is activated or entered in display **180** and **280**, and the incoming call is connected as a cordless call (e.g., in FIG. **2**, cordless transceiver **110** is enabled by microcomputer **130**).

Returning to decision block **316**, if a call has been initiated by the user of the CCT, YES branch is taken to decision block **318** where a check is made to determine if the initiated call is a cellular call. If so, YES branch is taken to block **308** where the initiated call is connected as a cellular call. If the initiated call is not a cellular call, NO branch is taken from decision block **318** to block **320** where the initiated call is connected as a cordless call.

Referring now to FIG. **5**, there is illustrated a flow chart for the process used by the CCTs **100** and **200** in FIGS. **2** and **3**, respectively, for originating a telephone call as a cellular telephone call or a cordless telephone call according to user selectable preference stored in the memory of microcomputers **130** and **230**.

Entering at block **400**, the user activates the CCT. Next, at block **402**, a check is made to determine if a call has been originated by the CCT. If not, NO branch is taken to wait for a call to be originated. If a call has been originated, YES branch is taken from decision block **402** to decision block **404**, where a check is made to determine if the user's preference is for cordless phone operation. If not, NO branch is taken to block **406** to determine if a call can be placed on the cellular system. If so, YES branch is taken to block **416** where the call origination is connected as a cellular call. If not, NO branch is taken to decision block **408** to determine if a call can be successfully placed on the cordless system. Referring back to decision block **404**, if preference is for cordless, YES branch is also taken to decision block **408**. If a cordless call can be successfully placed, YES branch is taken from decision block **408** to decision block **414** where the call is connected as a cordless call. If not, NO branch is taken to decision block **410** to determine if a call had been tried unsuccessfully on the cellular system. If so, YES branch is taken to block **402** to wait for a call origination. If not, NO branch is taken to decision block **406** to determine if the call can be placed on the cellular system.

Referring now to FIG. **6**, there is illustrated a flow chart for the process used by the CCTs **100** and **200** in FIGS. **2** and **3**, respectively, for receiving a telephone call as a cellular telephone call or a cordless telephone call according to user selectable preference stored in the memory of microcomputers **130** and **230**.

Entering at block **500**, the user activates the CCT. Next, at decision block **502**, a check is made to determine if a call is being received by the CCT. If not, NO branch is taken back to decision block **502**. If a call has been received, YES branch is taken from decision block **502** to decision block **504** to determine if the user's system preference matches the system of the incoming call. If so, YES branch is taken to decision block **508** to determine if the call is on the cordless system. If so, the YES branch is taken to block **510** where the incoming call is connected as a cordless call. If not, the NO branch is taken to block **512** where the incoming call is connected as a cellular call.

Returning to decision block **504**, if the user's system preference does not match the system of the incoming call, NO branch is taken to decision block **506** to determine if the preference is for the cordless system. If so, the YES branch is taken to decision block **514** to determine if the CCT is within range of the cordless base station (e.g., by sending the transmit security code and waiting for the receive security code from the cordless base station). If not, the NO branch is taken to block **512** where the incoming call is connected as a cellular call. If the cellular cordless telephone is within range of the cordless base station, YES branch is taken from decision block **514** to decision block **516** to determine if the cellular system will forward the unanswered incoming call to the landline of the cordless base station when the cellular phone cannot be reached. This type of service is generally referred to as "call forwarding" (a process which redirects a call from the dialed cellular telephone number of CCT **10** to the landline telephone number of cordless base station **180**) and can be determined by polling stored information in the memory associated with the CCT microcomputer. If call forwarding service is not available, NO branch is taken to block **512** where the incoming call is connected as a cellular call. If the cellular system will forward the unanswered incoming call, YES branch is taken from decision block **516** to block **518** where the cellular page from the cellular base station is ignored and thereafter to decision block **502** to wait for the incoming call to be received as a cordless call.

Returning to decision block **506**, if the preference is for a cellular call, NO branch is taken to decision block **520** to determine if the CCT is within range of the cellular base stations (does it have cellular service). This is typically determined by scanning and selecting the strongest signalling channel from the surrounding cellular base stations. If not, NO branch is taken to block **510**, where the incoming call is connected as a cordless call. If the CCT is within range of the cellular base stations, YES branch is taken from decision block **520** to decision block **522** to determine if the landline system will forward the unanswered incoming call to the cellular system. This type of service is generally referred to as "call forwarding" (a process which redirects a call from the dialed landline telephone number of cordless base station **180** to the cellular telephone number of CCT **10**) and can be determined by polling stored information in the memory associated with the CCT microcomputer. If call forwarding service is not available, NO branch is taken to block **510** where the incoming call is connected as a cordless call. If the landline telephone system will forward the unanswered incoming call, YES branch is taken from decision block **522** to block **524** where the cordless page from the cordless base Station is ignored and thereafter back to decision block **502** to wait for the incoming call to be received as a cellular call.

Referring now to FIG. **7**, there is illustrated a flow chart for the process used by the CCTs **100** and **200** in FIGS. **2** and **3**, respectively, for simultaneously processing both a cellular telephone call and a cordless telephone call and, if desired, three-way linking both calls.

Entering at block **600**, the user activates the CCT. Next, at block **602**, one call is assumed to be in process on either the cellular system or cordless system. Proceeding from block **602** to decision block **604**, a check is made to determine if a call has been received on the opposite system from the call in process. If so, YES branch is taken to decision block **608** to determine if the user has selected the dual-mode feature (e.g., by entering a predetermined code from the keypad). If not, NO branch is taken back to decision block **604** and the current call remains in process. If the user has selected the dual-mode feature, YES branch is taken from decision block **608** to block **610** which alerts the user of an in-

coming call on the alternate system. This type of service is generally referred to as "call waiting". Next, at decision block **612**, a check is made to see if the user acknowledges the second call. If not, NO branch is taken back to decision block **604** and the current call remains in process. If the user acknowledges the second call (e.g., by flashing the hookswitch), YES branch is taken from decision block **612** to decision block **614** to determine if the user has selected three-way linking (e.g., by entering a predetermined code from the keypad). If so, YES branch is taken to block **616** which enables three-way linking of the user and the two calls, each of which is on a different system. Three-way linking may be accomplished by switchably coupling the combined receive audio signals from summing amplifier **159** via analog gate **155** to the speaker, and enabling both transmit audio switches **152** and **154** in FIG. **9**. If the user has not selected three-way linking, NO branch is taken from decision block **614** to block **618** to process both calls simultaneously, one over each system, but selection between them is made by the user so that only one party is in conversation with the user at a time. Selection between the calls may be made pressing a pre-selected key or set of keys on the keypad.

Returning to decision block **604**, if a call has not been received on the opposite system, NO branch is taken to decision block **606** to determine if a call has been originated on the opposite system. If not, NO branch is taken back to decision block **604**. If a call has been originated on the opposite system, YES branch is taken from decision block **606** to decision block **614** to determine if the user wants three-way linking, as described hereinabove.

Referring now to FIG. **8**, there is illustrated a flow chart for the process used by the CCTs **100** and **200** in FIGS. **2** and **3**, respectively, for automatically transfering between a cellular telephone call and a cordless telephone call.

Entering at block **700**, the user activates the CCT. Next at block **702**, a call is assumed to be in process on one of the two systems. Proceeding from block **702** to decision block **704**, a check is made to determine if the call in process is on the cordless system. If so, YES branch is taken to decision block **708** to determine if the OCT is still within range of the cordless base stations (e.g., signal quality is good). If so, YES branch is taken back to decision block **704**. If the cellular cordless telephone is out of range of the cordless base stations, NO branch is taken from decision block **708** to decision block **710** to determine if the user has selected transfer of the cordless call to the cellular system (e.g., by entering a predetermined code from the keypad). If so, YES branch is taken to block **714** where an attempt is made to transfer the cordless call to the cellular system. Assuming the called party has "call waiting", the transfer is attempted by originating another call on the cellular system and waiting for the called party to answer. Thereafter, the path returns to decision block **704**. If the user has not selected call transfer, NO branch is taken from decision block **710** to block **712** where the cordless call is maintained as long as possible.

Returning to decision block **704**, if the call is not on the cordless system, NO branch is taken to decision block **706** to determine if the CCT is still within range of the cellular base stations (e.g., signal quality is good). If so, YES branch is taken back to decision block **704**. If the CCT is out of range of the cellular base stations, NO branch is taken from decision block **706** to decision block **716** to determine if the user has selected transfer of the cellular call to the cordless system (e.g., by entering a predetermined code from the keypad). If not, NO branch is taken to block **720** where the cellular call is maintained as long as possible. If the user has selected call transfer, YES branch is taken from decision block **716** to block **718** where an attempt is made to transfer the cellular call to the cordless system. Assuming the called party has "call waiting", the transfer is attempted by originating another call on the cordless system and waiting for the called party to answer. Thereafter, the path returns to decision block **704**.

In summary, a unique cellular cordless telephone has been described that may be advantageously utilized for making both cellular telephone calls and cordless telephone calls. Whenever the cellular cordless telephone is within range of the cordless base station, telephone calls are preferably originated on the cordless system, or if currently in process, are transferred to the cordless telephone system.

We claim:

1. A method of re-establishing telephone communications between a called telephone number and a cellular cordless telephone on one of a cellular telephone system and a cordless telephone system when call transfer has been selected by the user thereof during a telephone call, said cellular cordless telephone having a cellular transceiver and a cordless transceiver and originating and receiving cellular telephone calls on cellular radio channels of a cellular telephone system and cordless telephone calls on at least one cordless radio channel of a cordless base station coupled to a telephone landline having a landline telephone number, said method comprising the steps of:

monitoring the signal quality of said telephone call on said one of said cellular telephone system and said cordless telephone system;

determining if at least one radio channel is available for a call on the other one of said cellular telephone system and said cordless telephone system;

determining if call transfer has been selected; and

automatically originating another telephone call to said called telephone number on said other one of said cellular telephone system and said cordless telephone system determined to have at least one available radio channel, in response to a predetermined change in the signal quality of said telephone call and a determination that call transfer has been selected.

2. The method according to claim **1**, wherein said cordless base station includes a cordless base station radio, said cellular telephone system includes at least one cellular base station radio, and said step of monitoring the signal quality of said telephone call includes the step of:

monitoring the signal strength of the cordless base station radio and the signal strength of the cellular base station radio.

3. The method according to claim **1**, wherein said cellular cordless telephone further includes first and second call indicating means, said method further including the step of activating the first call indicating means during a cellular telephone call and the second call indicating means during a cordless telephone call.

4. A method of maintaining telephone communications between a called telephone number and a cellular cordless telephone on one of a cellular telephone system and cordless telephone system when call transfer has been selected by the user thereof during a telephone

call, said cellular cordless telephone having a cellular transceiver and a cordless transceiver and originating and receiving cellular telephone calls on cellular radio channels of a cellular telephone system and cordless telephone calls on at least one cordless radio channel of a cordless base station coupled to a telephone landline having a landline telephone number, said cellular cordless telephone including first and second system indicating means for indicating when the cellular telephone system and the cordless telephone system, respectively, are available, said method comprising the steps of:

monitoring the signal quality of said telephone call on said one of said cellular telephone system and said cordless telephone system;

determining if at least one radio channel is available for a call on the other one of said cellular telephone system and said cordless telephone system;

activating one of the first and second system indicating means corresponding to said other one of said cellular telephone system and said cordless telephone system determined to have at least one available radio channel;

determining if call transfer has been selected; and

automatically originating another telephone call to said called telephone number on said other one of said cellular telephone system and said cordless telephone system determined to have at least one available radio channel, in response to a predetermined change in the signal quality of said telephone call and a determination that call transfer has been selected.

5. The method according to claim **4**, wherein said cellular cordless telephone further includes first and second call indicating means, said method further including the step of activating the first call indicating means during a cellular telephone call and the second call indicating means during a cordless telephone call.

6. The method according to claim **4**, wherein said cordless base station includes a cordless base station radio, said cellular telephone system includes at least one cellular base station radio, and said step of monitoring the signal quality of said telephone call includes the step of:

monitoring the signal strength of the cordless base station radio and the signal strength of the cellular base station radio.

7. The method according to claim **1**, further including the step of maintaining said telephone call if call transfer has not been selected.

8. The method according to claim **4**, further including the step of maintaining said telephone call if call transfer has not been selected.

* * * * *