US007956570B2

(12) **United States Patent**
Lowenthal et al.

(10) **Patent No.: US 7,956,570 B2**
(45) **Date of Patent: Jun. 7, 2011**

(54) **NETWORK-CONTROLLED CHARGING SYSTEM FOR ELECTRIC VEHICLES**

(75) Inventors: **Richard Lowenthal**, Cupertino, CA (US); **Dave Baxter**, Monte Sereno, CA (US); **Harjinder Bhade**, San Jose, CA (US); **Praveen Mandal**, Los Altos Hills, CA (US)

(73) Assignee: **Coulomb Technologies, Inc.**, Campbell, CA (US)

(*) Notice: Subject to any disclaimer, the term of this patent is extended or adjusted under 35 U.S.C. 154(b) by 811 days.

(21) Appl. No.: **12/013,296**

(22) Filed: **Jan. 11, 2008**

(65) **Prior Publication Data**

US 2009/0174365 A1 Jul. 9, 2009

Related U.S. Application Data

(60) Provisional application No. 61/019,474, filed on Jan. 7, 2008.

(51) **Int. Cl.**
H01M 10/46 (2006.01)

(52) **U.S. Cl.** **320/104**

(58) **Field of Classification Search** 320/107, 320/104, 108, 114, 115, 132; 701/22; 702/63; 903/907

See application file for complete search history.

(56) **References Cited**

U.S. PATENT DOCUMENTS

4,532,418	A	7/1985	Meese et al.	
5,297,664	A	3/1994	Tseng et al.	
5,548,200	A *	8/1996	Nor et al.	320/109
5,563,491	A	10/1996	Tseng	
5,812,643	A	9/1998	Schelberg, Jr. et al.	
6,081,205	A	6/2000	Williams	
6,314,169	B1	11/2001	Schelberg, Jr. et al.	
6,466,658	B2	10/2002	Schelberg, Jr. et al.	
6,721,400	B2	4/2004	Schelberg, Jr. et al.	
6,791,473	B2	9/2004	Kibria et al.	
6,812,857	B1	11/2004	Kassab et al.	
7,254,468	B2 *	8/2007	Pillar et al.	701/22
2006/0224484	A1	10/2006	Nhaissi et al.	
2007/0282495	A1	12/2007	Kempton et al.	

FOREIGN PATENT DOCUMENTS

WO WO 2007/141543 12/2007

OTHER PUBLICATIONS

International Search Report and Written Opinion issued Feb. 5, 2009 for PCT/US09/30276.

(Continued)

Primary Examiner — Edward Tso

(74) *Attorney, Agent, or Firm* — Blakely, Sokoloff, Taylor & Zafman LLP

(57) **ABSTRACT**

A system for network-controlled charging of electric vehicles comprises charge transfer devices networked as follows: charge transfer devices and electric vehicle operators communicate via wireless communication links; charge transfer devices are connected by a local area network to a data control unit, which is connected to a server via a wide area network. The server stores consumer profiles and utility company power grid load data. A charge transfer devices comprises: an electrical receptacle for receiving an electrical connector for recharging an electric vehicle; an electric power line connecting the receptacle to a local power grid; a control device on the electric power line, for switching the receptacle on and off; a current measuring device on the electric power line, for measuring current flowing through the receptacle; a controller for operating the control device and monitoring the output from the current measuring device; a local area network transceiver connected to the controller, for connecting the controller to the data control unit; and a communication device connected to the controller, for wireless communication between the operator of the electric vehicle and the controller.

87 Claims, 6 Drawing Sheets

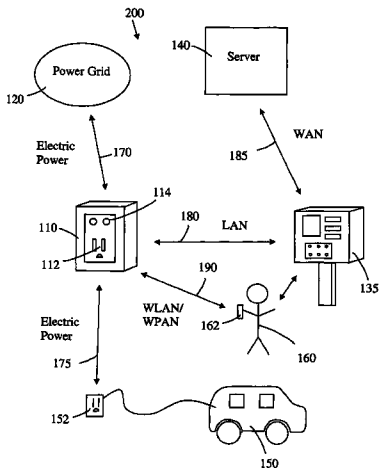

OTHER PUBLICATIONS

AC Propulsoion, "Vehicle to Grid (V2G) Technology", downloaded at www.acpropulsion.com/technology/v2g.htm, Jan. 10, 2008. 4 pages.

"Vehicle-to-Grid (V2G) Technology", downloaded Jan. 10, 2008 from http://www.acpropulsion.com/technology/v2g.htm.

Lin, C., et al., "The Installation on Public Area of Recharging Terminals for Electric Vehicles", whitepaper, undated, pp. 126-135.

Rouchereau, H., et al., "EDF and the Electric Vehicle: Comprehensive and Standardized Charging Facilities", whitepaper, undated, pp. 737-741.

* cited by examiner

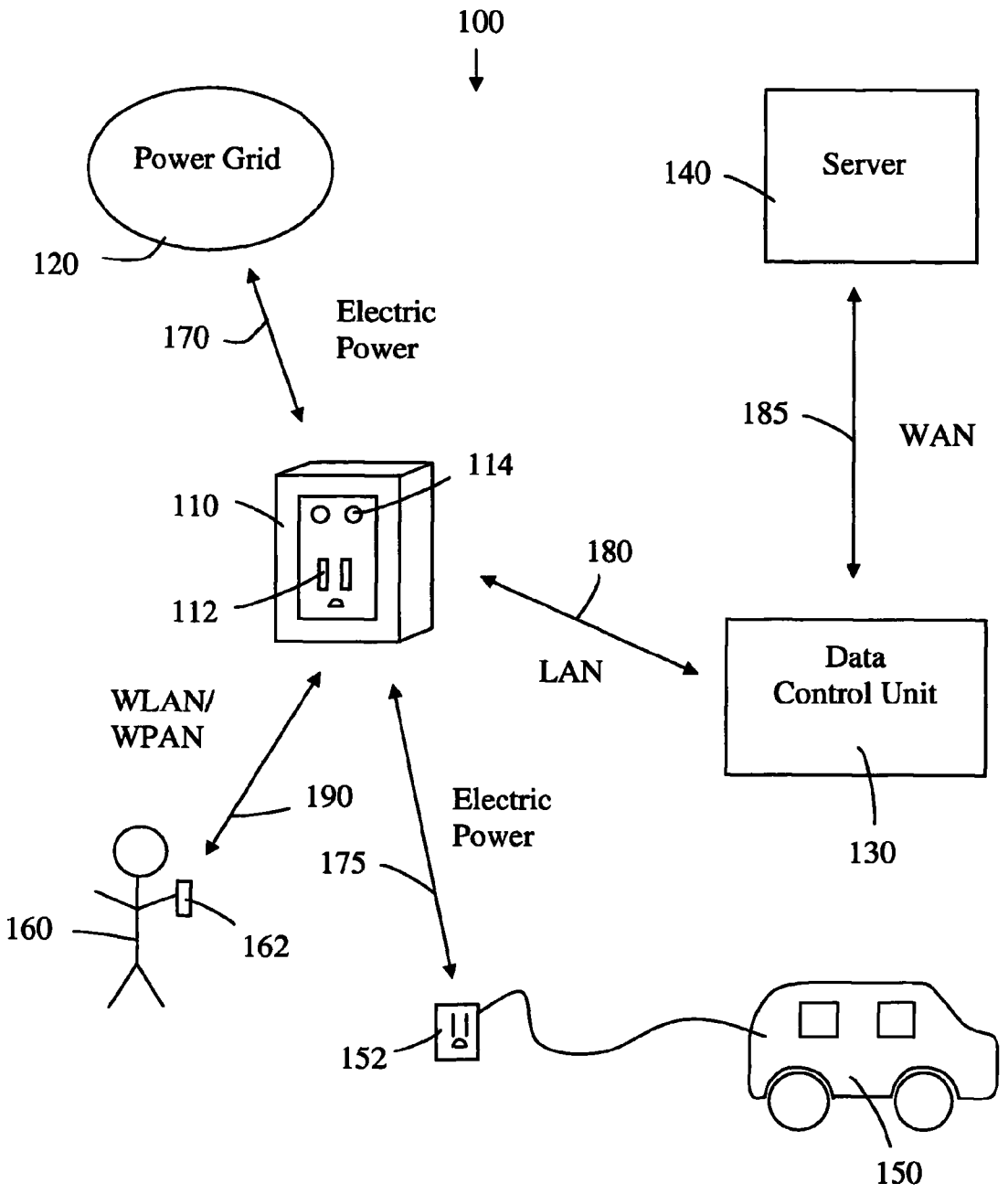
100
Power Grid
120
Server
140
170
Electric
Power
185
WAN
114
110
112
180
LAN
Data
Control Unit
130
WLAN/
WPAN
190
Electric
Power
175
160
162
152
150

FIGURE 1

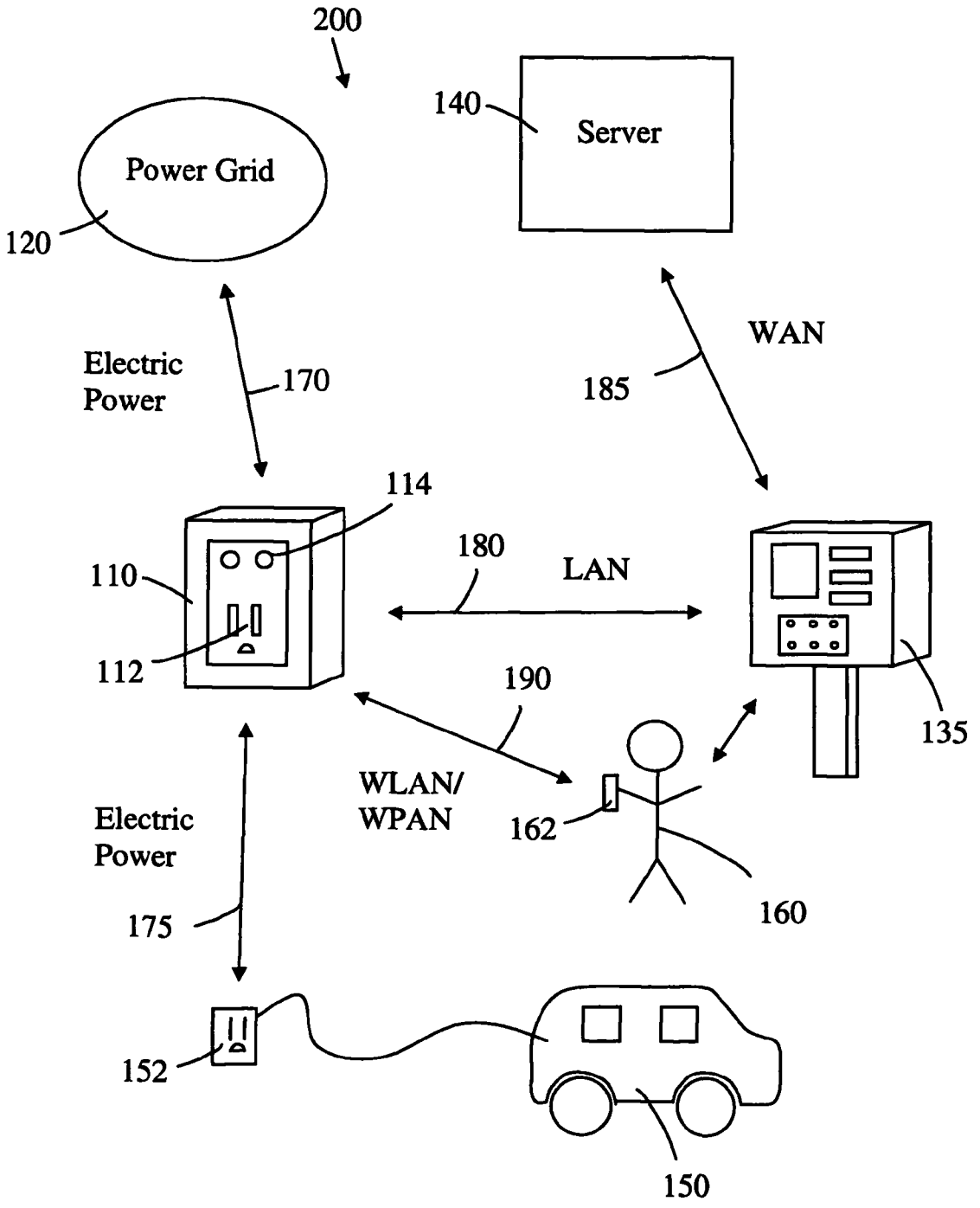
200
140
Server
Power Grid
120
Electric
Power
170
185
WAN
114
110
180
LAN
112
190
135
WLAN/
WPAN
162
Electric
Power
175
160
152
150

FIGURE 2

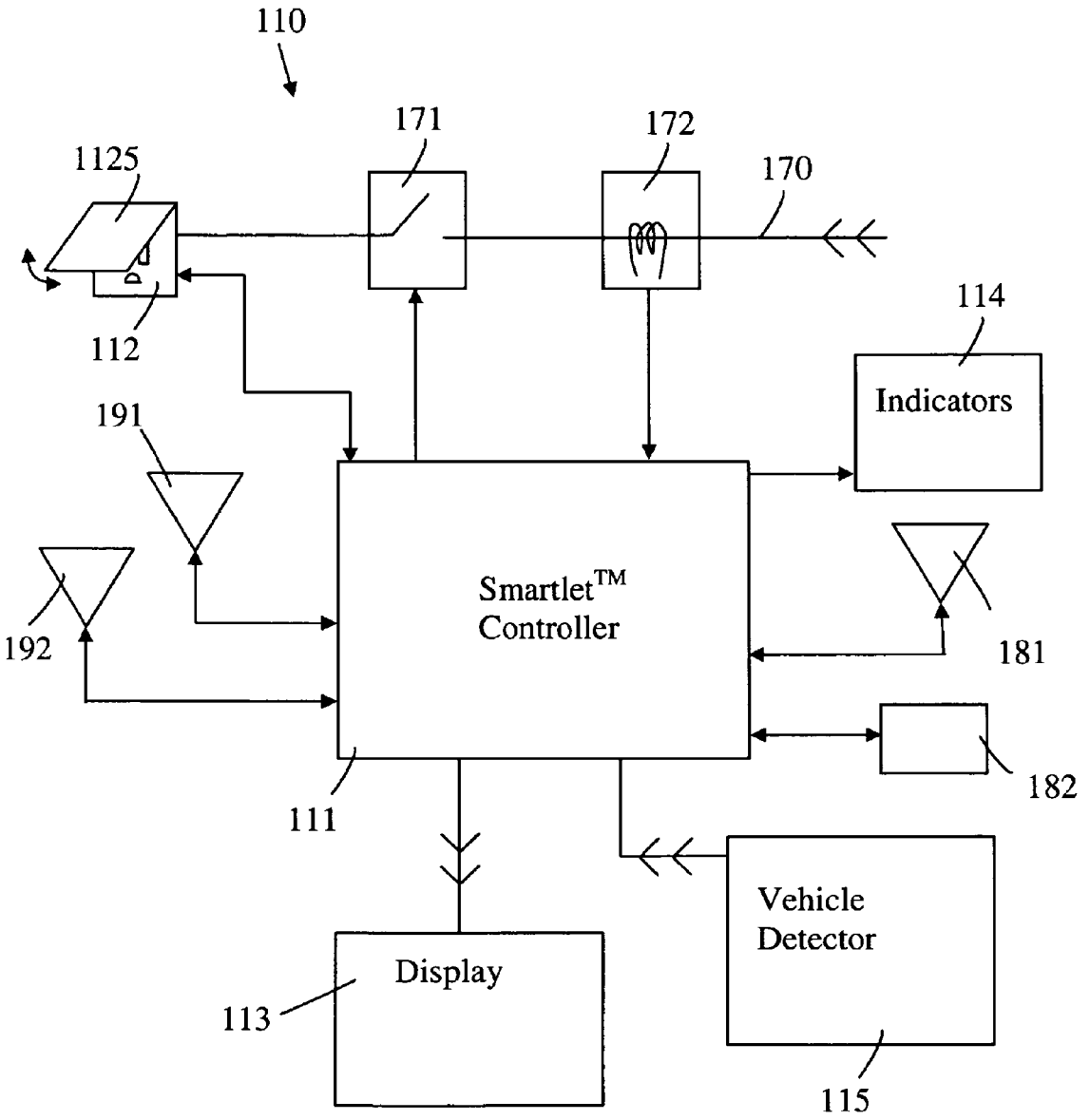
110
171
172
1125
170
112
114
Indicators
191
Smartlet™
Controller
192
181
182
111
Vehicle
Detector
Display
113
115

FIGURE 3

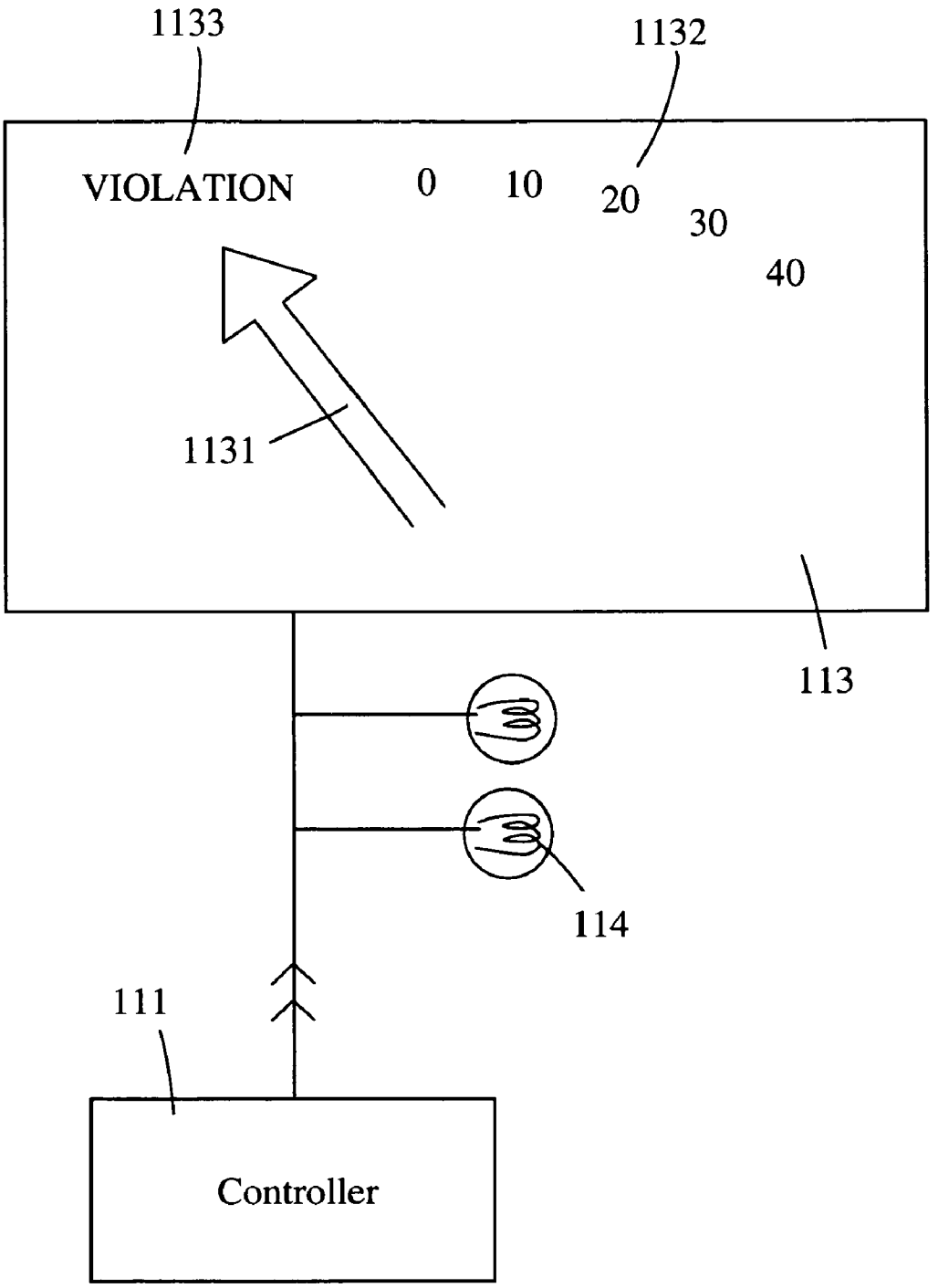

FIGURE 4

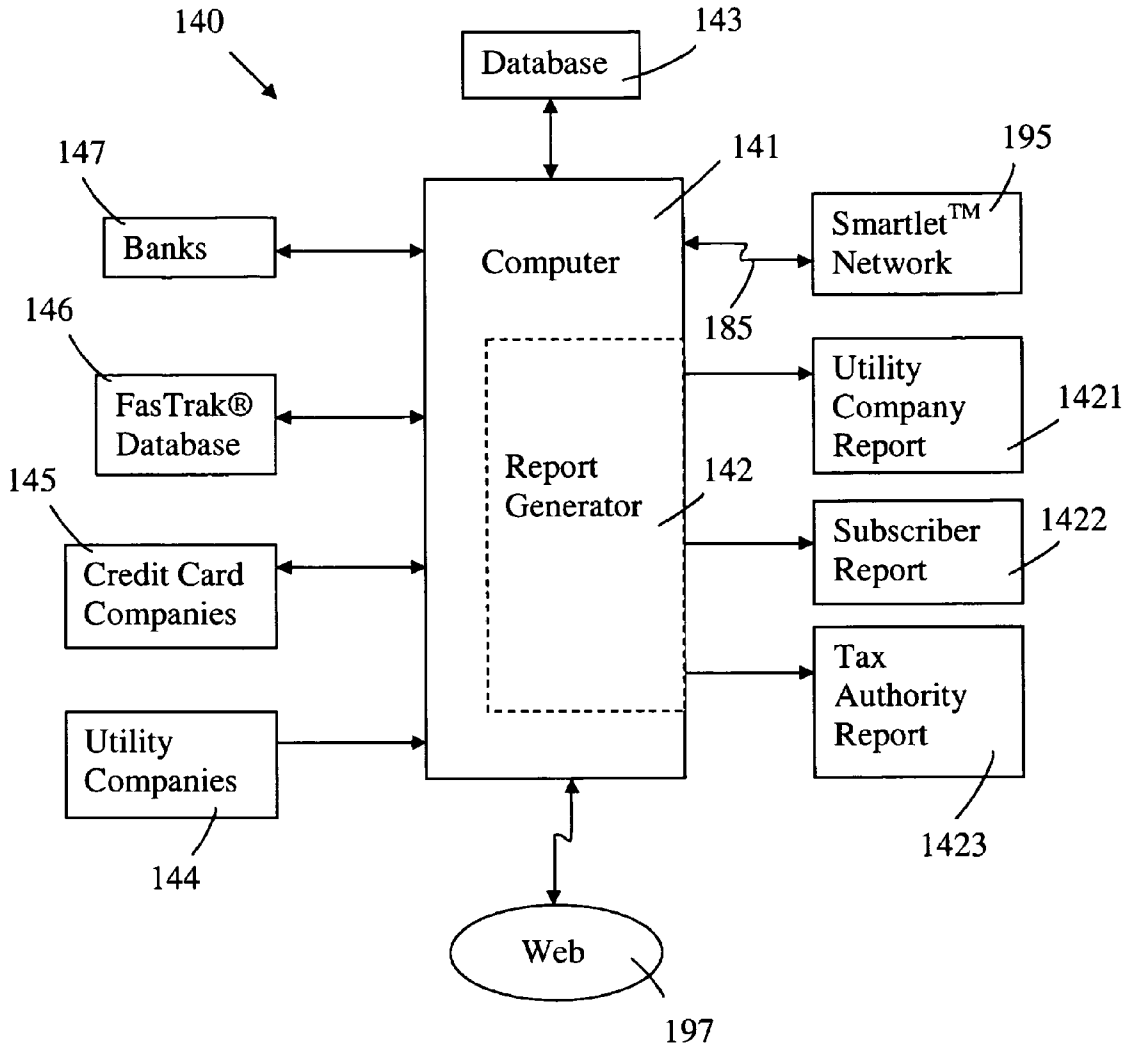
140
Database
143
147
141
195
Banks
Computer
Smartlet™ Network
146
185
FasTrak® Database
Utility Company Report
1421
Report Generator
142
145
Subscriber Report
1422
Credit Card Companies
Tax Authority Report
Utility Companies
1423
144
Web
197

FIGURE 5

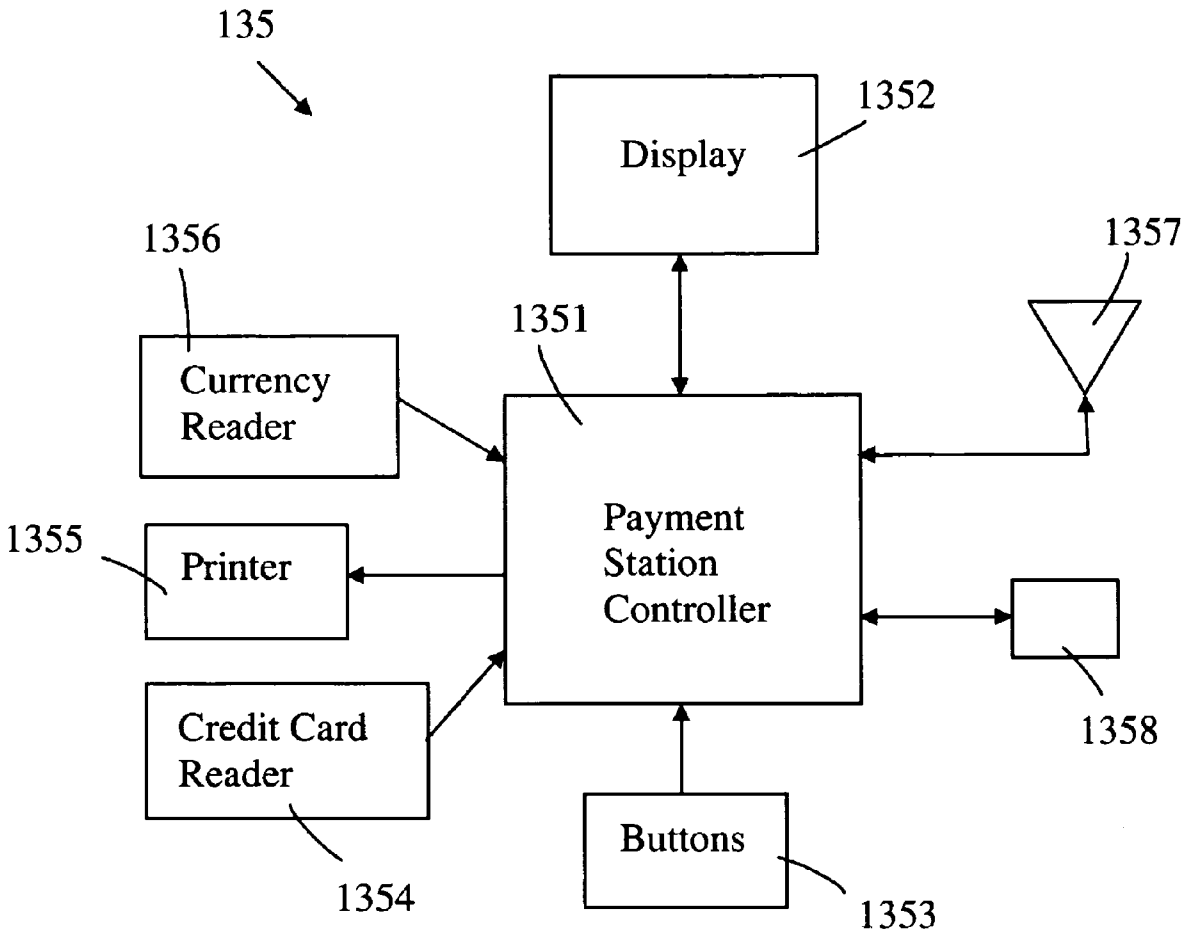
135
Display
1352
1356
1357
1351
Currency Reader
Payment Station Controller
1355
Printer
Credit Card Reader
1358
Buttons
1354
1353

FIGURE 6

NETWORK-CONTROLLED CHARGING SYSTEM FOR ELECTRIC VEHICLES

CROSS REFERENCE TO RELATED APPLICATIONS

This application claims the benefit of U.S. Provisional Application Ser. No. 61/019,474 filed Jan. 7, 2008, incorporated by reference herein.

BACKGROUND OF THE INVENTION

1. Field of the Invention

This invention relates to the field of systems and methods for recharging electric vehicles and to network-controlled electrical outlets used in such systems.

2. Description of the Related Art

The electric car, electric vehicle (EV) and battery electric vehicle are all used to describe automobiles powered by one or more electric motors utilizing energy stored in rechargeable batteries. The batteries are recharged by connecting to an electrical outlet. Efficient recharging of the batteries typically requires hours and is often done overnight or while the electric vehicle is parked for a significant time. The use of electric vehicles is limited by the sparse availability of recharging facilities. There is a need for more widespread recharging facilities. Furthermore, there is a need for more recharging facilities available where vehicles are parked for longer periods of time.

An important part of any consumer experience is the ease of acquiring a product—to recharge an electric vehicle this entails finding an available recharging facility, controlling the facility, and paying for the electricity consumed. There is a need for a communication network which facilitates finding the recharging facility, controlling the facility, and paying for the electricity consumed.

Electricity grids have periods of high demand from customers where the demand may approach or even exceed the electricity supply. Conversely, there are periods of low demand which coincide with high electricity production. Demand Response is a mechanism for reducing consumption of electricity during periods of high demand. For example, consumer services such as air conditioning and lighting may be reduced during periods of high demand according to a preplanned load prioritization scheme. Demand Response may also be used to increase demand at times of high electricity production. For example, the cost of electricity may be reduced during periods of low demand. Furthermore, some Demand Response systems encourage energy storage during periods of low demand, for release back into the electricity grid during periods of high demand. For example, battery electric vehicles may be charged during periods of low power demand and then release power back to the grid during periods of high demand.

Electric vehicles can be recharged from a local electricity grid. These vehicles can also be a source of electric power to be transferred to the local electricity grid. The transfer of electricity stored in electric vehicles to the local electric grid is referred to as vehicle-to-grid (V2G). V2G is particularly attractive for electric vehicles which have their own charging devices, such as battery electric vehicles with regenerative braking and plug-in hybrid vehicles. V2G is desirable for peak load leveling—helping to meet the demand for electricity when demand is at its highest. V2G is not widely available—it is principally being used in small pilot schemes. There is a need for more widely available Demand Response and V2G to assist with peak load leveling.

For Demand Response and V2G to be implemented effectively, real time communication of a need for power input into the local electricity grid is required. This communication from electric utility companies needs to reach recharging facility managers and electric vehicle owners and users. There is a need for an efficient communication network for managing peak load leveling using Demand Response and V2G.

Currently, a major source of revenue for building and maintaining highways for vehicular traffic is the gasoline tax. Should electric vehicles start to replace significant numbers of gasoline burning vehicles there will be a drop in tax revenues. To compensate for this loss in revenue, a tax on electricity consumption by electric vehicles may be imposed. Such a tax would require accurate measurement and reporting of electricity consumed by electric vehicles. Consequently, there will be a need for a system for collection of taxes and consumption information.

As is clear from the above discussion, communication networks are an essential part of electric vehicle recharging systems that will meet the needs of electric vehicle operators, recharging facility operators, utility companies and tax authorities. A survey of communication networks, ranging from local area networks to wide area networks, is provided below. There is a focus on wireless networks which would be accessible to mobile communication devices. A variety of mobile communication devices are also described.

A radio frequency identification transmitter, commonly referred to as an RFID transmitter, is used for short range communication with an RFID receiver. Typical ranges are of the order of one meter to tens of meters. An example of an RFID transmitter is a remote keyless entry device.

A radio frequency identification transceiver, commonly referred to as an RFID transceiver, is used for short range communication with an RFID transponder. (A transceiver is a device that has both a transmitter and a receiver.) Typical ranges are of the order of one meter for communication with passive transponders and hundreds of meters for communication with active transponders. The longer range of the active transponders is due to a power supply integrated into the transponder. RFID transponders store information which is broadcast over radio frequencies when prompted by a specific radio frequency signal from an RFID transceiver. An example of an RFID transponder is a FasTrak® card, primarily used for payment of automotive tolls in California. Each FasTrak® card has a unique code which is associated with a debit account. Each time a FasTrak® card passes through a toll collection point, the unique code is transmitted by the card in response to being interrogated by an RFID transceiver. The code is detected by the RFID transceiver and the toll is debited from the user's account.

A wireless personal area network (WPAN) radio frequency transceiver is used for radio frequency short range (typically within 1-100 meters) communication between devices. An example of such a device is a Bluetooth® transceiver, where Bluetooth® refers to a particular standard and protocol primarily designed for short range radio frequency communications. Another example is a ZigBee® transceiver, where ZigBee® refers to a standard and protocol designed for short range radio frequency communications. ZigBee® transceivers form mesh networks.

A wireless local area network transceiver is used for radio frequency communication over tens of meters or more between devices. An example of such a device is a Wi-Fi® device, where a Wi-Fi® device is one that is based on the IEEE 802.11 standard. Another example is a ZigBee® device—see discussion above. Wireless local area networks

(WLANs) are typically configured to provide higher throughput and cover greater distances than wireless personal area networks (WPANs); a WLAN typically requires more expensive hardware to set up than a WPAN.

Power line communication (PLC) technology can be used to network computers over electrical power lines. This technology is restricted to short distances for high-speed transmission of large amounts of data. An alternating current line transceiver is used to enable PLC. A PLC network is another example of a LAN.

Wired local area networks (wired LANs), which include both wire and optical fiber, are also used to connect computers. A wired LAN is distinguished from a PLC LAN by the use of dedicated wires, used only for carrying communication signals and not used as a power lines. The Ethernet is the most widespread wired LAN technology.

Wide area networks (WANs) are computer networks that cover a broad geographical area—a network that crosses city, regional or national boundaries. The best known example of a WAN is the Internet. The Internet is a worldwide, publicly accessible plurality of interconnected computer networks that use a standard protocol—Transmission Control Protocol (TCP)/Internet Protocol (IP). Many local area networks are part of the Internet. There are also privately owned WANs. The World Wide Web (WWW), often referred to as the Web, is a collection of interconnected web pages. The Web is accessible via the Internet.

There is a need to effectively integrate these wide area networks, local area networks and short range communication devices into systems used for recharging electric vehicles.

SUMMARY OF THE INVENTION

A system for network-controlled charging of electric vehicles and the network-controlled electrical outlets used in this system are described herein. The system comprises electrical outlets, called Smartlets™, networked as follows: Smartlets™ and electric vehicle operators communicate via wireless communication links; Smartlets™ are connected by a LAN to a data control unit; and the data control unit is connected to a server via a WAN. The server stores: consumer profiles (including account information for payment); utility company power grid load data (updated in real time by the utility company); and electricity consumption data that may be required for government tax purposes. The system may be vehicle-to-grid enabled.

Vehicle operators may use a variety of mobile communication devices to communicate with the Smartlets™, including: one-way RFID, two-way RFID, WPAN and WLAN devices. Communication between the Smartlets™ and the data control unit may be either via a PLC LAN or a WLAN. The WAN may be a private WAN, or the Internet.

Some systems also include a payment station, remote from the Smartlets™, which can be set up to allow vehicle operators to pay for both parking and recharging of their vehicles. When payment stations are included in the system, the data control units may conveniently be incorporated into the payment stations. Some system may be enhanced with a device for detecting the presence of a vehicle occupying the parking space in front of the Smartlet™. Such devices may include sonar, TV camera and induction coil devices. Furthermore, parking meter display units may be attached to the Smartlets™ to provide parking information, including: (1) paid parking time remaining; and (2) parking violation.

A Smartlet™ comprises an electrical receptacle configured to receive an electrical connector for recharging an electric vehicle; an electric power line connecting the receptacle to a local power grid; a control device on the electric power line, for switching the receptacle on and off; a current measuring device on the electric power line, for measuring current flowing through the receptacle; a controller configured to operate the control device and to monitor the output from the current measuring device; a local area network transceiver connected to the controller, the local area network transceiver being configured to connect the controller to the data control unit; and a communication device connected to the controller, the communication device being configured to connect the controller to a mobile wireless communication device, for communication between the operator of the electric vehicle and the controller.

A method of transferring charge between a local power grid and an electric vehicle is disclosed herein. The method comprises the following steps: (1) assembling a user profile, the user profile containing payment information, the user profile being stored on a server; (2) providing an electrical receptacle for transferring charge, the receptacle being connected to the local power grid by an electric power line, charge transfer along the electric power line being controlled by a controller configured to operate a control device on the electric power line; (3) receiving a request to the controller for charge transfer, the request being made from a mobile wireless communication device by an operator of the electric vehicle, the controller being connected to a communication device for communication with the mobile wireless communication device; (4) relaying the request from the controller to the server, the controller being connected to a local area network for communication to the server via a wide area network; (5) validating a payment source for the operator of the electric vehicle based on the user profile corresponding to the operator; (6) enabling charge transfer by communicating from the server to the controller to activate the control device; (7) monitoring the charge transfer using a current measuring device on the electric power line, the controller being configured to monitor the output from the current measuring device and to maintain a running total of charge transferred; (8) detecting completion of the charge transfer; and (9) on detecting completion, sending an invoice to the payment source and disabling charge transfer.

The method of transferring charge between a local power grid and an electric vehicle may also include the step of determining charge transfer parameters. This determination may be based on power grid load data, provided by the utility company and available on the server. For example, the utility company's Demand Response system may limit recharging of electric vehicles during periods of high electricity demand. This determination may also be made based on the user profile provided by the vehicle operator and available on the server. The user profile may include information such as whether the vehicle operator wants to: charge the electric vehicle only during periods of lower power rates; not charge the vehicle during periods of high power grid load; and sell power to the local grid.

Furthermore, the method of transferring charge between a local power grid and an electric vehicle may also include the steps of: determining availability of parking spaces with Smartlets™; communicating availability to the server where the information is accessible by vehicle operators on the Web. A vehicle detector, as described above, may be used to determine whether a parking space is available.

When a payment station is available to a vehicle operator, a request to the Smartlet™ controller for vehicle charging may be made from the payment station instead of by a mobile

communication device. Furthermore, the payment station may be used to pay for parking, independent of electric vehicle recharging.

BRIEF DESCRIPTION OF THE FIGURES

FIG. **1** is a schematic diagram of a network-connected charging outlet system according to a first embodiment of the invention.

FIG. **2** is a schematic diagram of a network-connected charging outlet system according to a second embodiment of the invention.

FIG. **3** is a schematic circuit diagram of a network-connected charging outlet of the invention.

FIG. **4** is a schematic circuit diagram of a parking meter display unit of the invention.

FIG. **5** is a schematic diagram of a server of the invention.

FIG. **6** is a schematic diagram of a remote payment system of the invention.

DETAILED DESCRIPTION

The present invention will now be described in detail with reference to the drawings, which are provided as illustrative examples of the invention so as to enable those skilled in the art to practice the invention. Notably, the figures and examples below are not meant to limit the scope of the present invention to a single embodiment, but other embodiments are possible by way of interchange of some or all of the described or illustrated elements.

A first embodiment of the network-controlled charge transfer system **100** for charging electric vehicles is shown in FIG. **1**. The system **100** comprises a network-controlled charge transfer device **110**, a local power grid **120**, a data control unit **130**, and a server **140**. The system **100** interfaces with an electric vehicle **150**, with an electrical connector **152**, and an electric vehicle operator **160**, via a mobile communication device **162**. The network-controlled charge transfer device **110**, referred to herein as a Smartlet™, is connected to the local power grid **120** by an electric power line **170**, and to the electric vehicle **150** by the electrical connector **152**. The flow of electrical power may be in either direction for both of these electrical connections. In other words, the electric vehicle **150** can be recharged from the local power grid **120**, or the local power grid **120** can receive power from the electric vehicle **150**. The Smartlet™ **110** has a communication link to the data control unit **130** over a local area network (LAN) **180**. The LAN **180** may be either a wireless local area network (WLAN) or a power line communication (PLC) network. The data control unit **130** has a communication link to the server **140** over a wide area network (WAN) **185**. The electric vehicle operator **160** uses the mobile communication device **162** to establish a communication link to the Smartlet™ **110** over a wireless network **190**. This wireless network may be a WLAN or a wireless personal area network (WPAN). The communication link between the electric vehicle operator **160** and the Smartlet™ **110** allows information to be shared which enables recharging of the electric vehicle **150**.

The Smartlet™ **110** comprises an electrical receptacle **112** and indicator lights **114**. The electrical receptor **112** and the electrical connector **152** are configured to make an electrical connection allowing safe flow of electrical power between the Smartlet™ **110** and the electrical vehicle **150**. Examples of suitable receptacles are those conforming to the NEMA (National Electrical Manufacturers Association) standards 5-15, 5-20 and 14-50. Although, other receptacles will be used for systems outside the United States which operate at voltages other than 110V (for example 220V) and which are required to meet different standards. In preferred embodiments the electrical receptacle **112** has a cover. The cover is lockable and is released by the Smartlet™ **110** upon receipt of a request for charging of an electrical vehicle **150** by the electric vehicle operator **160**. This request may be made by the mobile communication device **162**, as described above.

The indicator lights **114** are used to show the operational status of the Smartlet™ **110**—for example, the status may be: charging in progress, charging complete, vehicle-to-grid (V2G) in progress and error warning. The indicator lights **114** may be LEDs (light emitting diodes), may be capable of showing a number of different colors and may be capable of continuous or flashing modes of operation. Alternatively, the indicator lights **114** may be replaced by an alphanumeric display.

The local power grid **120** is the electrical supply grid owned and operated by local utility companies. Although, the local power grid **120** does extend to parts of the electrical supply network that are not owned by the utility company, such as electrical cables on private premises.

The data control unit **130** acts as a bridge between the LAN and the WAN, and enables communication between the Smartlet™ **110** and the server **140**. The server **140** is generally remote from the Smartlet™ **110**.

The system **100** is shown in FIG. **1** with only one Smartlet™ **110**; however, the system will be comprised of many Smartlets™ **110**, all linked to the server **140** through one or more data control units **130**. There will be one data control unit **130** for each group of geographically proximate (within the range of the same local area network) Smartlets™ **110**.

The electric vehicle **150** is any battery operated electric vehicle, including EVs and plug in hybrids. Electric vehicles **150** that have the necessary V2G electronics are able to provide power to the local power grid **120**.

The mobile communication device **162**, used by the electric vehicle operator **160**, can be any type of WLAN or WPAN compatible device. Examples of compatible devices are: one way and two-way RFID devices, an example of the latter being a FasTrac® card; Wi-Fi® devices, such as a personal computer; BlueTooth® devices, such as a mobile phone; and ZigBee® devices. In some embodiments of the invention the vehicle user **160** can monitor charging using the mobile communication device **162**. This can be implemented by allowing access to the vehicle user **160** of the power consumed by the electric vehicle **150**, which is monitored by the Smartlet™ **110** and stored on the server **140**. Access can either be directly to the Smartlet™ **110** over a LAN or to the server **140** over the Internet.

A second embodiment of the network controlled charge transfer system **200** for charging electric vehicles **150** is shown in FIG. **2**. The system **200** comprises a network-controlled charge transfer device (Smartlet™ **110**, a local power grid **120**, a payment station **135**, and a server **140**. The system **200** interfaces with an electric vehicle **150**, with an electrical connector **152**, and an electric vehicle operator **160**, via a mobile communication device **162**. The Smartlet™ **110** is connected to the local power grid **120** by an electric power line **170**, and to the electric vehicle **150** by the electrical connector **152**. The flow of electrical power may be in either direction for both of these electrical connections. The Smartlet™ **110** has a communication link to the payment station **135** over a LAN **180**. The LAN **180** may be either a WLAN or a PLC network. The payment station **135** has a communication link to the server **140** over a WAN **185**. (In this embodiment, the payment station **135** is taking the place of the data control unit **130** for acting as a bridge between the LAN and

the WAN.) The electric vehicle operator **160** may use the mobile communication device **162** to establish a communication link to the Smartlet™ **110** over a wireless network **190**. This wireless network may be a WLAN or a WPAN. Instead of using a mobile communication device **162**, the electric vehicle operator **160** may manually interact with the payment station **135**, which then sends appropriate instructions to the Smartlet™ **110** regarding charging of the electric vehicle **150**. In preferred embodiments these instructions will include an instruction to unlock a cover over the electrical receptacle **112**, thus allowing the vehicle operator **160** to connect the electric vehicle **150** to the electrical receptacle **112** with the electrical connector **152**.

The payment station **135** can be several tens of meters remote from the Smartlet™ **110**. The payment station **135** is shown comprising a currency reader, a credit card reader, a receipt printer, a display and input buttons. However, the payment station does not have to include all of these components. For example, some payment stations may not include a currency reader and will only allow payment by credit card using the credit card reader. The electric vehicle operator **160** can use the payment station **135** to pay for and schedule recharging of the electric vehicle **150**, and also for V2G transactions. The payment station **135** may also be used to pay for parking. Further details of the payment station **135** are provided in FIG. **6** and the related description.

A schematic of the Smartlet™ **110** is provided in FIG. **3**. The Smartlet™ **110** comprises an electrical receptacle **112**, a lockable cover **1125** over the electrical receptacle **112**, a control device **171**, a current measuring device **172**, an electric power line **170**, a controller **111**, a display unit **113**, a vehicle detector **115**, a WLAN transceiver **181**, an alternating current line transceiver **182**, a WPAN transceiver **191** and an RFID transceiver **192**.

Electric power is delivered to receptacle **112** along power line **170**. Controller **111** is used to lock and unlock the cover **1125**; the lock mechanism is electromechanical. When unlocked, the cover **1125** may be lifted by the vehicle operator **160** in order to connect the electric vehicle **150** to the electrical receptacle **112** using the electrical connector **152**. Control device **171** is used to turn the electric supply at the receptacle **112** on and off. The control device **171** is preferably a solid state device and is controlled by controller **111**. The current flowing along the power line **170** is measured by current measuring device **172**. An example of a suitable measuring device **172** is an induction coil. The controller **111** is programmed to monitor the signal from the current measuring device **172** and to calculate the total power either: consumed (in recharging the electric vehicle); or transferred to the local power grid **120** from the electric vehicle **150** (V2G). It is also envisaged that power may be both consumed and transferred to the grid during the time an electric vehicle is connected to the Smartlet™ **110**, in which case the controller **111** will calculate both the power consumed and the power transferred to the local power grid **120**.

The indicators **114** and display **113** are controlled by the controller **111** and are used to provide information to the Smartlet™ **110** user. The indicators **114** are discussed in more detail above, with reference to FIG. **1**, and the display **113** is discussed in more detail below with reference to FIG. **4**.

Vehicle detector **115** is used to detect the presence of a vehicle in the parking space corresponding to the Smartlet™ **110**. The vehicle detector **115** is controlled by the controller **111**. The vehicle detector **115** is a detector such as a sonar sensor array, a camera, or an induction coil. The sonar array is an array as used on the rear bumper of automobiles to detect close proximity to an object; this array can be attached to the Smartlet™ **110** or will be mounted to a support structure in close proximity to the Smartlet™ **110**. The camera is a digital camera providing a video signal to the Smartlet™ **110**; the video signal is processed by an object recognition program to detect the presence of a vehicle or other obstruction. The induction coil is either embedded in the pavement of the parking space or is protected by a roadworthy casing attached to the surface of the pavement. The induction coil is connected to the Smartlet™ **110** and detects the presence of large metal objects in close proximity to the coil (such as an engine block, electric motor or rear differential of a vehicle).

The controller **111** is shown with four transceivers—a WLAN transceiver **181**, an alternating current line transceiver **182**, a WPAN transceiver **191** and an RFID transceiver **192**. A transceiver is a device that both sends and receives signals, allowing for two-way communication. The WLAN transceiver **181** allows for the controller to communicate with mobile communication devices which are carried by a vehicle operator **160** (see communication link **190** in FIGS. **1** & **2**) and with a data control unit **130** or payment station **135** (see communication link **180** in FIGS. **1** & **2**). WLAN transceiver **181** could be a Wi-Fi® transceiver. The alternating current line transceiver allows the controller to communicate on a PLC network with a control data unit **130** or payment station **135** (see communication link **180** in FIGS. **1** & **2**). The WPAN transceiver **191** allows the controller **111** to communicate with mobile communication devices **162** which are carried by the vehicle operator **160**. WPAN transceiver **191** could be a BlueTooth® or ZigBee® transceiver. The RFID transceiver **192** allows the controller to communicate with a compatible RFID device carried by the vehicle operator **160**. An example of an RFID device that could be carried by the vehicle operator **160** is a FasTrak® card. A FasTrak® device is an example of a two-way RFID communication device. Although, a one-way RFID communication device from vehicle operator **160** to controller **111** can be utilized. Not all embodiments of the Smartlet™ **110** have all four types of transceiver; however, all Smartlet™ **110** will have at least one wireless transceiver for communication with compatible mobile wireless communication devices **162** available to vehicle operators **160**, and one transceiver for communication with the data control unit **130**. See FIGS. **1** & **2**.

A more detailed view of the display unit **113** is shown in FIG. **4**. An example of parking information is shown on the display unit **113**—an indicator **1131** shows the paid parking time remaining in minutes **1132** or a parking violation **1133**. This parking information may be displayed in many other ways than that shown in FIG. **4**. The display unit **113** may be an LCD (liquid crystal display); although other passive flat panel displays such as OLEDs (organic light emitting displays) and other emissive flat panel displays such as FEDs (field emission displays) may be used. When a passive display unit **113** is used it is preferred that it be backlit, so as to be readily viewed in low ambient light conditions. The display unit **113** is attached to the Smartlet™ **110** so that it is readily observable by the vehicle operator **160**. For example, the display **113** may be mounted on a pole at a height of approximately 125 cm above the pavement, and the Smartlet™ **110** would also be mounted on the pole at a convenient height for the vehicle operator. The indicator lights **114** may be positioned next to the display **113**, or may be positioned on the Smartlet™ **110** itself, as shown in FIGS. **1** & **2**. The display **113** is controlled by the controller **111**. The display **113** may also be used to display information regarding the vehicle charging process, such as: time charging, power consumed,

estimated time to completion of charging, vehicle-to-grid (V2G) power transferred, general status indications and error warnings.

A schematic diagram of the server **140** is shown in FIG. **5**. The server **140** comprises a computer **141**, report generator **142**, and database **143**. The server **140** is configured to communicate with the following: Smartlet™ network **195**; World Wide Web **197**; utility companies **144**, for receiving power load management data; credit card companies **145**, for credit authorization and charging; FasTrak® database **146**, for debiting FasTrak® accounts; and banks **146**, for debiting bank accounts. The database **143** is used to store consumer profiles and other data required for report generation, as described below.

The report generator **142** creates reports such as: utility company reports **1421**, detailing power consumed and V2G power sold to local power grid **120**; subscriber reports **1422**, detailing power consumed and V2G power sold to the local power grid **120**, account balance, payments and invoices, and subscriber profile data; and tax authority reports **1423**, providing details of taxable transactions.

The Smartlet™ network **195** comprises a multiplicity of data control units **130** and/or payment stations **135**, each data control unit **130** and/or payment station **135** being connected by a communication link **180** to a multiplicity of Smartlets™ **110**. The communication link **185** between the computer **141** and the Smartlet™ network **195** is a WAN.

The server **140** is interfaced with the Web **197** to allow subscribers (owners and operators **160** of electric vehicles **150**) to do the following: (1) set-up user/consumer profiles; and (2) determine availability of Smartlets™ **110** for recharging their electric vehicles **150**. A user profile contains financial account information—details required for payment—and may also include information such as whether the vehicle operator wants to: charge the electric vehicle only during periods of lower power rates; not charge the vehicle during periods of high power grid load; and sell power to the local grid. The availability of Smartlets™ **110** is stored on the server and the information is collected from the Smartlet™ network **195**. There are two ways that the availability of a Smartlet™ **110** can be determined: (1) using a vehicle detector **115** (see FIG. **3** and related description) to determine whether the parking space corresponding to the Smartlet™ **110** is available; and (2) flagging a Smartlet™ **110** as being unavailable whenever charging is ongoing, V2G is ongoing or parking has been paid for.

A schematic diagram of the payment station **135** is shown in FIG. **6**. The payment station **135** comprises a controller **1351**, a display **1352**, a set of buttons **1352**, a credit card reader **1354**, a receipt printer **1355**, a currency reader **1356**, a wireless transceiver **1357** and an alternating current line transceiver **1358**.

The display **1352** provides a vehicle operator **160** with information regarding recharging and/or parking their electric vehicle **150**. The display shares the same characteristics as the display **113** discussed above with reference to FIG. **4**. However, the display **1352** may also be touch sensitive, allowing a vehicle user to input information directly on the display screen **1352**. The buttons **1353** allow for input of information requested from the display **1352**.

The credit card reader **1354** is used for reading credit cards, debit cards, smart cards, and other cards that are used for identification purposes or for making payment. The printer **1355** is used for printing receipts, when requested by the consumer. The printer **1355** may also be used to print receipts for displaying in the electric vehicle **150** to show that recharging and/or parking is properly permitted. The currency reader **1356** is used for accepting currency—notes and/or coins—for payment. The currency reader **1356** is able to authenticate and identify the value of currency accepted.

The payment station **135** is networked to Smartlets™ **110** via either a WLAN or a PLC. The payment station controller **1351** takes the place of data control unit **130** in acting as a bridge between the LAN **180** and the WAN **185**. See FIGS. **1** & **2**.

A vehicle user **160** can use the network-controlled charge transfer systems **100** and **200** for charging their electric vehicle **150**. A vehicle user **160** who has a user profile on the server **140** is referred to as a subscriber. Some examples of how the systems **100** and **200** can be used are provided below.

Vehicle Charging Utilizing a Mobile Wireless Communication Device

1. a subscriber uses the Internet to establish a profile, which includes setting-up payment by credit card, debiting a bank account, a FasTrak® account, a PayPal® account, or other financial service;
2. the subscriber uses a wireless mobile communication device **162**, such as a mobile phone or a FasTrak® card, to request to the Smartlet™ **110** to charge the electric vehicle **150**;
3. the subscriber connects the electric vehicle **150** to the Smartlet™ **110** using the connector **152** (see FIGS. **1** & **2**);
4. the Smartlet™ **110** relays this request over the communication network to the server **140**;
5. the server **140** accesses the subscriber profile from the database **143**, validates the payment source by contacting the credit card company, FasTrak® database or bank, and via the communication network enables the Smartlet™ **110** to charge the vehicle **150**;
6. based on the subscriber profile and load management data from the utility company the server determines the charging periods and communicates this information to the Smartlet™ **110**;
7. the Smartlet™ **110** monitors the charging current, as described above with reference to FIG. **3**;
8. when the vehicle **150** is disconnected from the Smartlet™ **110**, charging is disabled and a bill is sent to the payment source. Note that determining when the electric vehicle **150** is disconnected from the Smartlet™ **110** can be done by: detecting when the current flow goes to zero; or using a sensor on the receptacle **112** which detects the mechanical removal of the connector **152**. If a sensor is used, the sensor is monitored by controller **111**. See FIG. **3**.

Note that the load management data from the utility company may limit the ability to recharge the vehicle **150** or the recharge rate for vehicle **150**, according to a Demand Response system. For example, the utility company could send a message to the Smartlet™ server **140** requiring a reduction in load. The Smartlet™ server **140** then turns off charging of some vehicles **150**. Which vehicles have charging stopped will depend on the subscriber profiles and the requirements of the Demand Response system. The Demand Response system and subscriber profiles may also allow for V2G.

The general procedure described above is also followed for V2G or a combination of charging and V2G, except that V2G will result in credits to the subscriber's account for sale of power to the local power grid **120**.

Vehicle Charging Utilizing a Payment Station

1. vehicle user **160** uses the payment station **135** to request and pay for charging the vehicle **150**;

2. vehicle user **160** connects the electric vehicle **150** to the Smartlet™ **110** using connector **152**;
3. the payment station **135** communicates via WAN **185** with server **140** for payment authorization;
4. the payment station **135** enables the Smartlet™ **110** for charging;
5. when the vehicle is disconnected from the Smartlet™ **110**, charging is disabled, the payment station **135** is notified, the payment station **135** notifies the server **140** and a bill is sent to the payment source.

Note that the load management data from the utility company may limit the ability to recharge the vehicle **150** or the recharge rate for vehicle **150**, according to a Demand Response system.

The general procedure described above is also followed for V2G or a combination of charging and V2G, except that V2G will result in credits to the vehicle user's account for sale of power to the local power grid **120**.

Vehicle Parking Utilizing a Mobile Wireless Communication Device

1. a subscriber uses the Internet to establish a profile, which includes setting-up payment by credit card, debiting a bank account, a FasTrak® account, a PayPal® account, or other financial service;
2. the subscriber uses a wireless mobile communication device **162**, such as a mobile phone, to request to the Smartlet™ **110** parking for the vehicle **150**;
3. the Smartlet™ **110** relays this request over the communication network to the server **140**;
4. the server **140** accesses the subscriber profile from the database **143**, validates the payment source by contacting the credit card company, FasTrak® database or bank, and via the communication network sends a message to the Smartlet™ **110** to allow parking of the vehicle **150**;
5. the Smartlet™ **110** sets the parking meter shown on display **113** (see FIGS. **3** & **4**) and sets the indicators **114**, if used;
6. the server **140** sends a bill to the payment source.

Optionally, if a vehicle detector **115** is used to detect the presence of a vehicle, then the amount of time a vehicle is parked without proper payment may be monitored and communicated to the payment station **135** and server **140**.

Vehicle Parking Utilizing a Payment Station

1. vehicle user **160** uses the payment station **135** to request and pay for parking the vehicle **150**;
2. the payment station **135** communicates via WAN **185** with server **140** for payment authorization;
3. the payment station **135** communicates to the Smartlet™ **110** to allow parking;
4. the server **140** sends a bill to the payment source.

The above methods for use of the Smartlet™ network for electric vehicle charging, V2G and parking can be combined. For example, a parking fee may be imposed in addition to a fee for power consumed in recharging a vehicle. Also, a parking fee may be imposed when a vehicle is parked for V2G.

The above embodiments of the present invention have been given as examples, illustrative of the principles of the present invention. Variations of the apparatus and method will be apparent to those skilled in the art upon reading the present disclosure. These variations are to be included in the spirit of the present invention. For example, the Smartlet™ network may be used for public and private garage and parking lot charging of electric vehicles. Furthermore, the Smartlet™ network may be used for home charging of electric vehicles, in which case a Smartlet™ receptacle in the home is connected via a LAN and a WAN to the Smartlet™ server **140**. Those skilled in the art will appreciate that the Smartlet™ network may also be used for non-vehicle applications, including selling electricity to people in places such as airports and coffee shops.

What is claimed is:

1. A network-controlled charge transfer device for transferring charge between a local power grid and an electric vehicle comprising:

an electrical receptacle configured to receive an electrical connector for connection to said electric vehicle;

an electric power line connecting said local power grid to said receptacle;

a control device on said electric power line, for switching said receptacle on and off;

a current measuring device on said electric power line, for measuring current flowing through said receptacle;

a controller configured to operate said control device and to monitor the output from said current measuring device;

a transceiver connected to said controller, said transceiver being configured to connect said controller to a local area network for access to a remote server via a wide area network; and

a communication device connected to said controller, said communication device being configured to connect said controller to a mobile wireless communication device, for communication between the operator of said vehicle and said controller;

wherein said controller is configured to manage charge transfer based on power grid load data, said power grid load data being available from said remote server, and wherein charge transfer may be in either direction between said local power grid and said electric vehicle.

2. A device as in claim **1**, wherein said wide area network is the Internet.

3. A device as in claim **1**, wherein said transceiver is a wireless local area network transceiver and said local area network is a wireless local area network.

4. A device as in claim **1**, wherein said transceiver is an alternating current line transceiver and said local area network is a power line communication network.

5. A device as in claim **1**, wherein said communication device is a wireless personal area network transceiver.

6. A device as in claim **1**, wherein said communication device is a radio frequency identification transceiver and said mobile wireless communication device is a radio frequency identification transponder.

7. A device as in claim **1**, wherein said communication device is a radio frequency identification receiver and said mobile wireless communication device is a mobile radio frequency identification transmitter.

8. A device as in claim **1**, further comprising an alternating current line transceiver connected to said controller, said alternating current line transceiver being configured to connect said controller to a power line communication network for access to a remote payment station.

9. A device as in claim **1**, further comprising indicator lights attached to said electrical outlet, said lights being connected to said controller, said controller being configured to operate said indicator lights in correspondence with an operational state of said charge transfer device.

10. A device as in claim **1**, further comprising a display unit attached to said electrical receptacle, for displaying information relating to charge transfer.

11. A device as in claim **1**, further comprising a vehicle detector connected to said controller, said vehicle detector being configured to detect a vehicle in a parking space corresponding to said charge transfer device.

12. A device as in claim 11, wherein said vehicle detector is a sonar sensor array attached to said receptacle.

13. A device as in claim 11, wherein said vehicle detector is a camera attached to said receptacle.

14. A device as in claim 11, wherein said vehicle detector is an induction coil in said parking space.

15. A device as in claim 11, wherein said controller is configured to communicate parking space availability to said remote server based on input from said vehicle detector.

16. A device as in claim 1, wherein said controller is further configured to manage charge transfer based on a consumer profile, said consumer profile being stored on said remote server.

17. A network-controlled charge transfer device for transferring charge between a local power grid and an electric vehicle comprising:

an electrical receptacle configured to receive an electrical connector for connection to said electric vehicle;

an electrical power line connecting said local power grid to said receptacle;

a control device on said electric power line, for switching said receptacle on and off;

a current measuring device on said electric power line, for measuring current flowing through said receptacle;

a controller configured to operate said control device and to monitor the output from said current measuring device;

an alternating current line transceiver connected to said controller, said alternating current line transceiver being configured to connect said controller to a power line communication network for access to a remote payment station; and

a communication device connected to said controller, said communication device being configured to connect said controller to a mobile wireless communication device, for communication between the operator of said electric vehicle and said controller;

wherein said remote payment station comprises a data control unit configured to connect said payment station to a wide area network for access to a remote server, wherein said controller is configured to manage charge transfer based on power grid load data, said power grid load data being available from said remote server, and wherein charge transfer may be in either direction between said local power grid and said electric vehicle.

18. A device as in claim 17, wherein said wide area network is the Internet.

19. A device as in claim 17, wherein said communication device is a wireless personal area network transceiver.

20. A device as in claim 17, wherein said communication device is a radio frequency identification transceiver and said mobile wireless communication device is a radio frequency identification transponder.

21. A device as in claim 17, wherein said communication device is a radio frequency identification receiver and said wireless communication device is a mobile radio frequency identification transmitter, for communication between the operator of said vehicle and said controller.

22. A device as in claim 17, further comprising a wireless local area network transceiver connected to said controller, said wireless local area network transceiver being configured to connect said controller to a local area network.

23. A device as in claim 17, further comprising indicator lights attached to said electrical outlet, said lights being connected to said controller, said controller being configured to operate said indicator lights in correspondence with an operational state of said charge transfer device.

24. A device as in claim 17, further comprising a display unit attached to said electrical receptacle, for displaying information relating to charge transfer.

25. A device as in claim 17, further comprising a vehicle detector connected to said controller, said vehicle detector being configured to detect a vehicle in a parking space corresponding to said charge transfer device.

26. A device as in claim 25, wherein said vehicle detector is a sonar sensor array attached to said receptacle.

27. A device as in claim 25, wherein said vehicle detector is a camera attached to said receptacle.

28. A device as in claim 25, wherein said vehicle detector is an induction coil in said parking space.

29. A device as in claim 25, wherein said controller is configured to communicate parking space availability to said remote server based on input from said vehicle detector.

30. A device as in claim 17, wherein said controller is configured to manage charge transfer based on a consumer profile, said consumer profile being stored on said remote server.

31. A network-controlled charge transfer system for electric vehicles comprising:

a server;

a data control unit connected to a wide area network for access to said server; and

a charge transfer device, remote from said server and said data control unit, comprising:

an electrical receptacle configured to receive an electrical connector for recharging an electric vehicle;

an electric power line connecting said receptacle to a local power grid;

a control device on said electric power line, for switching said receptacle on and off;

a current measuring device on said electric power line, for measuring current flowing through said receptacle;

a controller configured to operate said control device and to monitor the output from said current measuring device;

a local area network transceiver connected to said controller, said local area network transceiver being configured to connect said controller to said data control unit; and

a communication device connected to said controller, said communication device being configured to connect said controller to a mobile wireless communication device, for communication between the operator of said electric vehicle and said controller.

32. A system as in claim 31, wherein said wide area network is the Internet.

33. A system as in claim 31, wherein said transceiver is a wireless local area network transceiver.

34. A system as in claim 31, wherein said transceiver is an alternating current line transceiver, for communicating via a power line communication network.

35. A system as in claim 31, wherein said communication device is a wireless personal area network transceiver.

36. A system as in claim 31, wherein said communication device is a radio frequency identification transceiver and said mobile wireless communication device is a radio frequency identification transponder.

37. A system as in claim 31, wherein said communication device is a radio frequency identification receiver and said mobile wireless communication device is a mobile radio frequency identification transmitter.

38. A system as in claim 31, further comprising a display unit attached to said electrical receptacle, for displaying information relating to charge transfer.

39. A system as in claim 31, further comprising a vehicle detector connected to said controller, said vehicle detector being configured to detect a vehicle in a parking space corresponding to said charge transfer device.

40. A system as in claim 39, wherein said vehicle detector is a sonar sensor array attached to said receptacle.

41. A system as in claim 39, wherein said vehicle detector is a camera attached to said receptacle.

42. A system as in claim 39, wherein said vehicle detector is an induction coil in said parking space.

43. A system as in claim 39, wherein said controller is configured to communicate parking space availability to said server based on input from said vehicle detector.

44. A system as in claim 31, wherein said controller is configured to manage charge transfer based on power grid load data, said power grid load data being available from said server.

45. A system as in claim 31, wherein said controller is configured to manage charge transfer based on a consumer profile, said consumer profile being stored on said server.

46. A system as in claim 31, wherein charge transfer may be in either direction between said local power grid and said electric vehicle.

47. A network-controlled charge transfer and metered parking system comprising:

a server;

a payment station comprising a data control unit configured to connect said payment station to a wide area network for access to said server;

a charge transfer device, remote from said server and said payment station, comprising:

an electrical receptacle configured to receive an electrical connector for recharging an electric vehicle;

an electric power line connecting said receptacle to a local power grid;

a control device on said electric power line, for switching said receptacle on and off;

a current measuring device on said electric power line, for measuring current flowing through said receptacle;

a controller configured to operate said control device and to monitor the output from said current measuring device;

an alternating current line transceiver connected to said controller, said alternating current line transceiver being configured to connect said controller to a power line communication network for access to said payment station; and

a communication device connected to said controller, said communication device being configured to connect said controller to a mobile wireless communication device, for communication between the operator of said electric vehicle and said controller; and

a display unit attached to said charge transfer device, said display being configured to display parking information, said parking information including (1) paid parking time remaining and (2) parking violation.

48. A system as in claim 47, wherein said wide area network is the Internet.

49. A system as in claim 47, further comprising a vehicle detector connected to said controller, said vehicle detector being configured to detect a vehicle in a parking space corresponding to said charge transfer device.

50. A system as in claim 49, wherein said vehicle detector is a sonar sensor array attached to said receptacle.

51. A system as in claim 49, wherein said vehicle detector is a camera attached to said receptacle.

52. A system as in claim 49, wherein said vehicle detector is an induction coil in said parking space.

53. A system as in claim 49, wherein said controller is configured to communicate parking space availability to said server based on input from said vehicle detector.

54. A system as in claim 53, wherein parking space availability data stored on said server is accessible on the Web.

55. A method of transferring charge between a local power grid and an electric vehicle, comprising:

assembling a user profile, said user profile containing payment information, said user profile being stored on a server;

providing an electrical receptacle for transferring charge, said receptacle being connected to said local power grid by an electric power line, charge transfer along said electric power line being controlled by a controller configured to operate a control device on said electric power line;

receiving a request to said controller for charge transfer, said request being made from a mobile wireless communication device by an operator of said electric vehicle, said controller being connected to a communication device for communication with said mobile wireless communication device;

relaying said request from said controller to said server, said controller being connected to a local area network for communication to said server via a wide area network;

validating a payment source for said operator of said electric vehicle based on said user profile corresponding to said operator;

enabling charge transfer by communicating from said server to said controller to activate said control device;

monitoring said charge transfer using a current measuring device on said electric power line, said controller being configured to monitor the output from said current measuring device and to maintain a running total of charge transferred;

detecting completion of said charge transfer; and

on detecting completion, sending an invoice to said payment source and disabling charge transfer.

56. A method as in claim 55, wherein said wide area network is the Internet.

57. A method as in claim 55, wherein said local area network is a wireless local area network.

58. A method as in claim 55, wherein said local area network is a power line communication network.

59. A method as in claim 55, wherein said mobile wireless communication device and said controller communicate over a wireless personal area network.

60. A method as in claim 55, wherein said communication device is a radio frequency identification transceiver and said mobile wireless communication device is a radio frequency identification transponder.

61. A method as in claim 55, wherein said communication device is a radio frequency identification receiver and said mobile wireless communication device is a mobile radio frequency identification transmitter.

62. A method as in claim 55, wherein said charge transfer may be in either direction between said local power grid and said electric vehicle.

63. A method as in claim 55, further comprising the step of determining charge transfer parameters for said electric

vehicle based on power grid load data, said power grid load data being available on said server.

64. A method as in claim **55**, further comprising the step of determining charge transfer parameters for said electric vehicle based on said user profile, corresponding to said operator, stored on said server.

65. A method as in claim **64**, wherein said user profile includes a determination of whether said operator wants to charge said electric vehicle only during periods of lower power rates.

66. A method as in claim **64**, wherein said user profile includes a determination of whether said operator is willing to not charge said electric vehicle during periods of high power grid load.

67. A method as in claim **64**, wherein said user profile includes a determination of whether said operator is willing to sell energy stored in said electric vehicle to said local power grid.

68. A method as in claim **55**, wherein said user profile is assembled from information provided by a vehicle user over the Internet.

69. A method as in claim **55**, further comprising:

determining the availability of a parking space corresponding to said electrical receptacle;

communicating the availability of said parking space to said server, said availability being stored on said server and being accessible to said vehicle operator on the Web.

70. A method as in claim **69**, wherein said determining step is implemented by a vehicle detector connected to said controller, said vehicle detector being configured to detect a vehicle in said parking space.

71. A method as in claim **70**, wherein said vehicle detector is a sonar sensor array attached to said electrical receptacle.

72. A method as in claim **70**, wherein said vehicle detector is a camera attached to said receptacle.

73. A method as in claim **70**, wherein said vehicle detector is an induction coil in said parking space.

74. A method of transferring charge between a local power grid and an electric vehicle, comprising:

assembling a user profile, said user profile containing payment information, said user profile being stored on a server;

providing an electrical receptacle for transferring charge, said receptacle being connected to said local power grid by an electric power line, charge transfer along said electric power line being controlled by a controller configured to operate a control device on said electric power line;

receiving a request to a remote payment station for charge transfer, said request being made by an operator of said electric vehicle, said remote payment station being connected to an alternating current line transceiver, said alternating current line transceiver being configured to connect said remote payment station to a power line communication network for access to said controller;

relaying said request from said remote payment station to said server, said remote payment station comprising a data control unit for communication to said server via a wide area network;

validating a payment source for said operator of said electric vehicle based on said user profile corresponding to said operator;

communicating successful validation of payment from said server to said remote payment station;

enabling charge transfer by communicating from said remote payment station to said controller to activate said control device;

monitoring said charge transfer using a current measuring device on said electric power line, said controller being configured to monitor the output from said current measuring device and to maintain a running total of charge transferred;

detecting completion of said charge transfer; and

on detecting completion, sending an invoice to said payment source and disabling charge transfer.

75. A method as in claim **74**, wherein said wide area network is the Internet.

76. A method as in claim **74**, wherein said charge transfer may be in either direction between said local power grid and said electric vehicle.

77. A method as in claim **74**, further comprising the step of determining charge transfer parameters for said electric vehicle based on power grid load data, said power grid load data being available on said server.

78. A method as in claim **74**, further comprising the step of determining charge transfer parameters for said electric vehicle based on said user profile, corresponding to said operator, stored on said server.

79. A method as in claim **78**, wherein said user profile includes a determination of whether said operator wants to charge said electric vehicle only during periods of lower power rates.

80. A method as in claim **78**, wherein said user profile includes a determination of whether said operator is willing to not charge said electric vehicle during periods of high power grid load.

81. A method as in claim **78**, wherein said user profile includes a determination of whether said operator is willing to sell energy stored in said electric vehicle to said local power grid.

82. A method as in claim **74**, wherein said user profile is assembled from information provided by a vehicle user over the Internet.

83. A method as in claim **74**, further comprising:

determining the availability of a parking space corresponding to said electrical receptacle;

communicating the availability of said parking space to said server, said availability being stored on said server and being accessible to said vehicle operator on the Web.

84. A method as in claim **83**, wherein said determining step is implemented by a vehicle detector connected to said controller, said vehicle detector being configured to detect a vehicle in said parking space.

85. A method as in claim **84**, wherein said vehicle detector is a sonar sensor array attached to said electrical receptacle.

86. A method as in claim **84**, wherein said vehicle detector is a camera attached to said receptacle.

87. A method as in claim **84**, wherein said vehicle detector is an induction coil in said parking space.

* * * * *