US 20080039980A1

(19) United States

(12) Patent Application Publication

(10) Pub. No.: US 2008/0039980 A1

(43) Pub. Date: Feb. 14, 2008

Pollack et al.

(54) SCHEDULING AND CONTROL IN A POWER AGGREGATION SYSTEM FOR DISTRIBUTED ELECTRIC RESOURCES

(75) Inventors: **Seth B. Pollack**, Seattle, WA (US); **Seth W. Bridges**, Seattle, WA (US); **David L. Kaplan**, Seattle, WA (US)

Correspondence Address:
LEE & HAYES, PLLC
421 W. RIVERSIDE AVE
STE 500
SPOKANE, WA 99201 (US)

(73) Assignee: **V2 Green Inc.**, Seattle, WA (US)

(21) Appl. No.: **11/836,749**

(22) Filed: **Aug. 9, 2007**

Related U.S. Application Data

(60) Provisional application No. 60/822,047, filed on Aug. 10, 2006. Provisional application No. 60/869,439, filed on Dec. 11, 2006. Provisional application No. 60/915,347, filed on May 1, 2007.

Publication Classification

(51) **Int. Cl.**
G05D 29/00 (2006.01)

(52) **U.S. Cl.** **700/295**

(57) **ABSTRACT**

Systems and methods are described for a power aggregation system. In one implementation, a service establishes individual Internet connections to numerous electric resources intermittently connected to the power grid, such as electric vehicles. The Internet connection may be made over the same wire that connects the resource to the power grid. The service optimizes power flows to suit the needs of each resource and each resource owner, while aggregating flows across numerous resources to suit the needs of the power grid. The service can bring vast numbers of electric vehicle batteries online as a new, dynamically aggregated power resource for the power grid. Electric vehicle owners can participate in an electricity trading economy regardless of where they plug into the power grid.

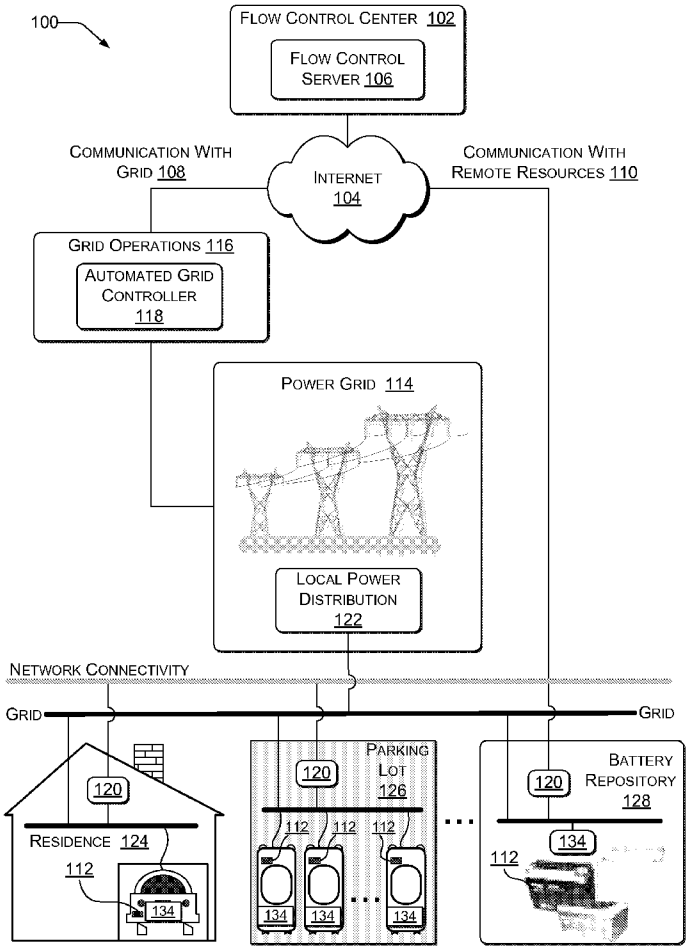

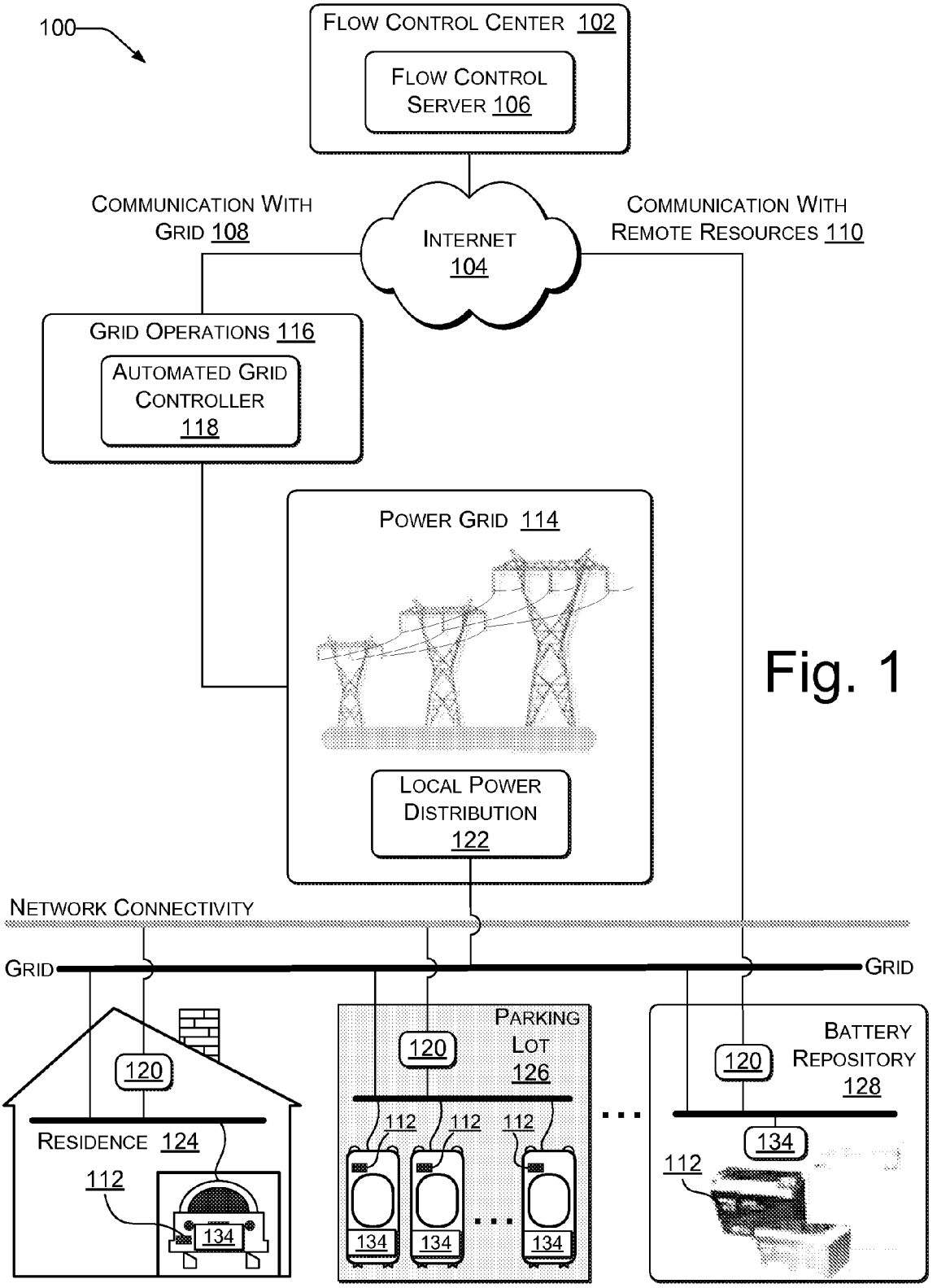
100
FLOW CONTROL CENTER 102
FLOW CONTROL SERVER 106
COMMUNICATION WITH GRID 108
INTERNET 104
COMMUNICATION WITH REMOTE RESOURCES 110
GRID OPERATIONS 116
AUTOMATED GRID CONTROLLER 118
POWER GRID 114
LOCAL POWER DISTRIBUTION 122
NETWORK CONNECTIVITY
GRID
GRID
120
RESIDENCE 124
112
134
PARKING LOT 126
120
112
112
112
134
134
134
120
BATTERY REPOSITORY 128
134
112

Fig. 1

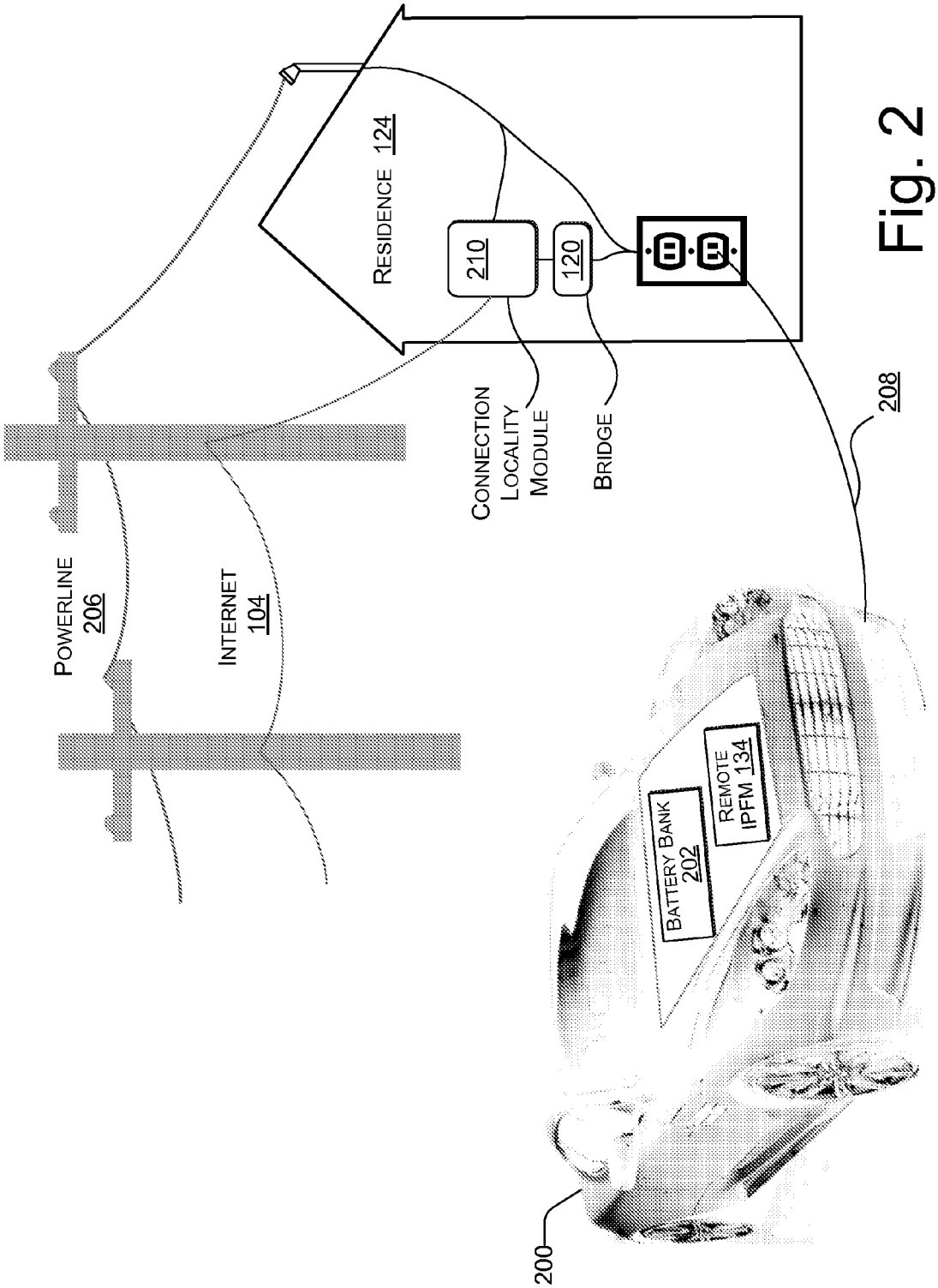
POWERLINE
206
INTERNET
104
RESIDENCE 124
210
120
CONNECTION
LOCALITY
MODULE
BRIDGE
208
BATTERY BANK
202
REMOTE
IPFM 134
200

Fig. 2

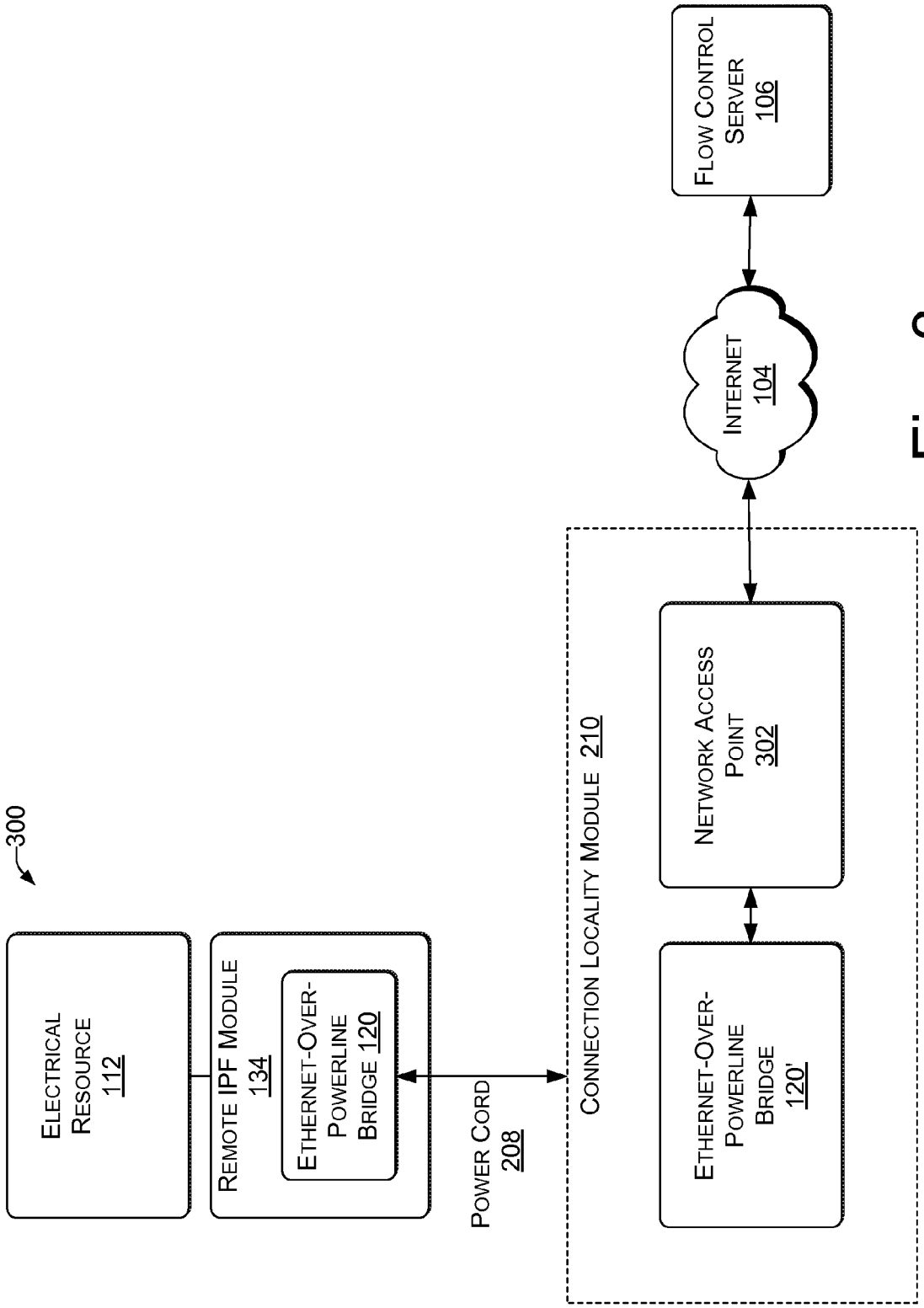
300
Electrical Resource 112
Remote IPF Module 134
Ethernet-Over-Powerline Bridge 120
Power Cord 208
Connection Locality Module 210
Ethernet-Over-Powerline Bridge 120'
Network Access Point 302
Internet 104
Flow Control Server 106

Fig. 3

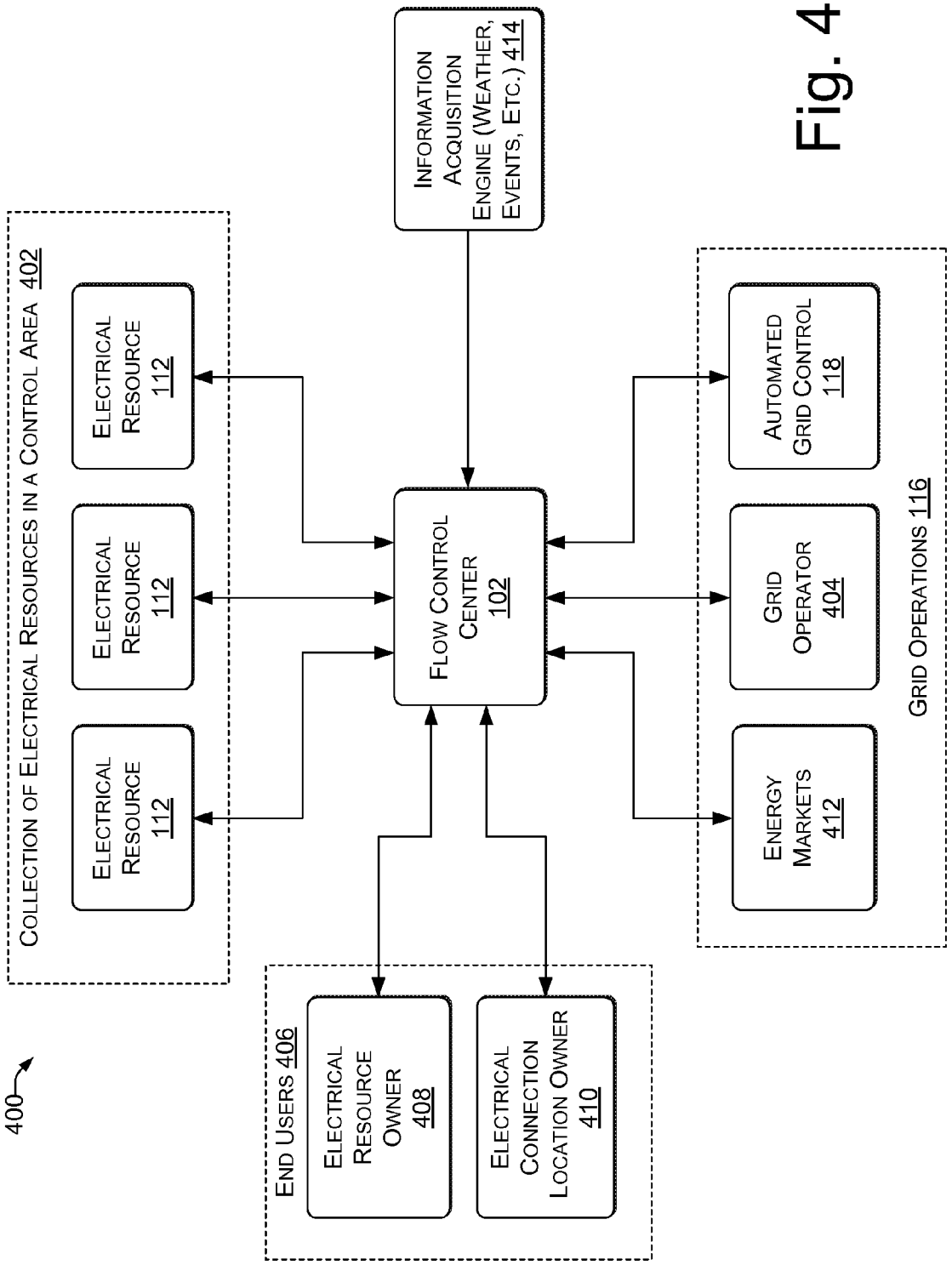
400
COLLECTION OF ELECTRICAL RESOURCES IN A CONTROL AREA 402
ELECTRICAL RESOURCE 112
ELECTRICAL RESOURCE 112
ELECTRICAL RESOURCE 112
INFORMATION ACQUISITION ENGINE (WEATHER, EVENTS, ETC.) 414
FLOW CONTROL CENTER 102
END USERS 406
ELECTRICAL RESOURCE OWNER 408
ELECTRICAL CONNECTION LOCATION OWNER 410
GRID OPERATIONS 116
AUTOMATED GRID CONTROL 118
GRID OPERATOR 404
ENERGY MARKETS 412

Fig. 4

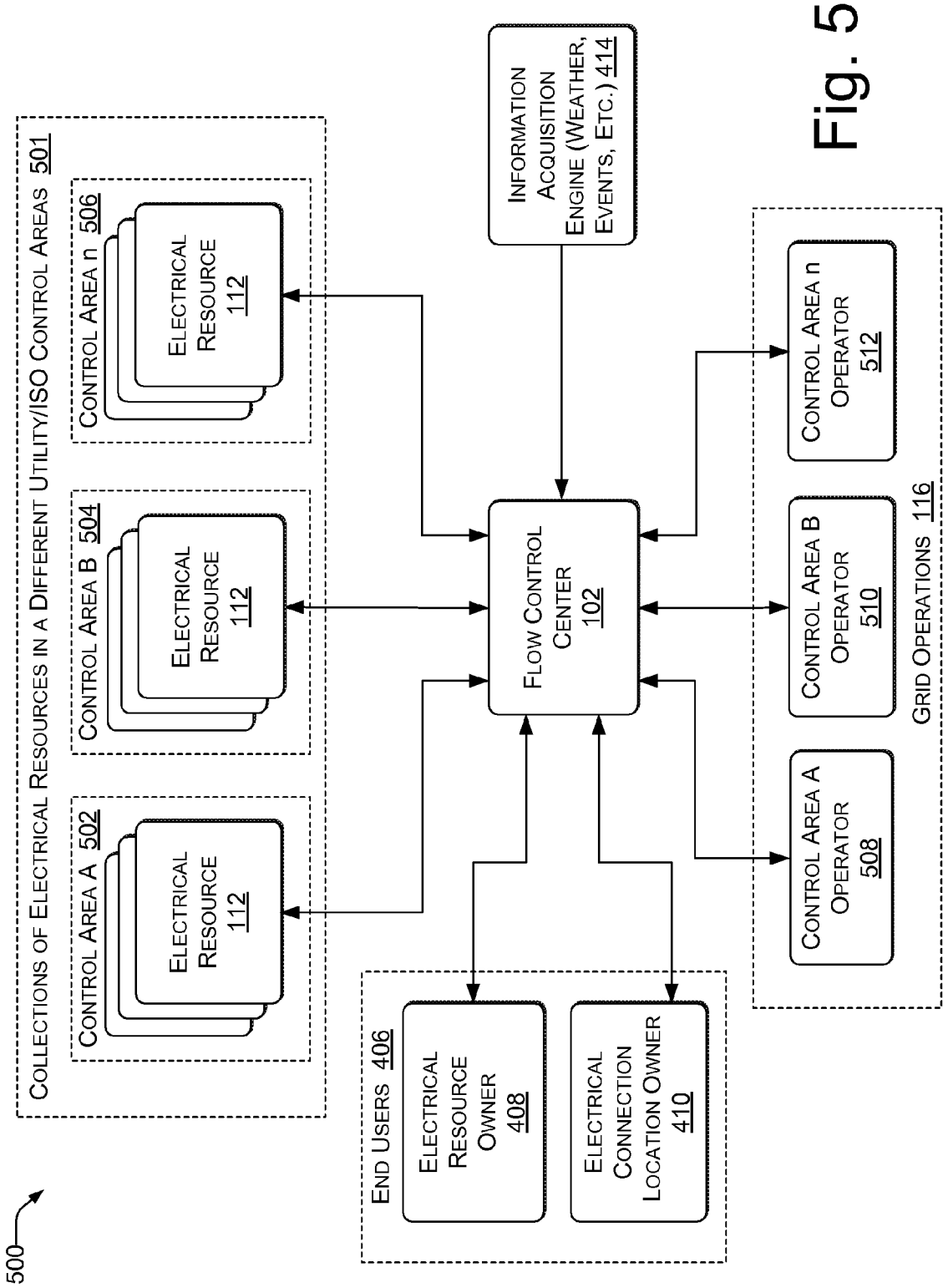
500
COLLECTIONS OF ELECTRICAL RESOURCES IN A DIFFERENT UTILITY/ISO CONTROL AREAS 501
CONTROL AREA A 502
ELECTRICAL RESOURCE 112
CONTROL AREA B 504
ELECTRICAL RESOURCE 112
CONTROL AREA n 506
ELECTRICAL RESOURCE 112
INFORMATION ACQUISITION ENGINE (WEATHER, EVENTS, ETC.) 414
FLOW CONTROL CENTER 102
END USERS 406
ELECTRICAL RESOURCE OWNER 408
ELECTRICAL CONNECTION LOCATION OWNER 410
GRID OPERATIONS 116
CONTROL AREA A OPERATOR 508
CONTROL AREA B OPERATOR 510
CONTROL AREA n OPERATOR 512

Fig. 5

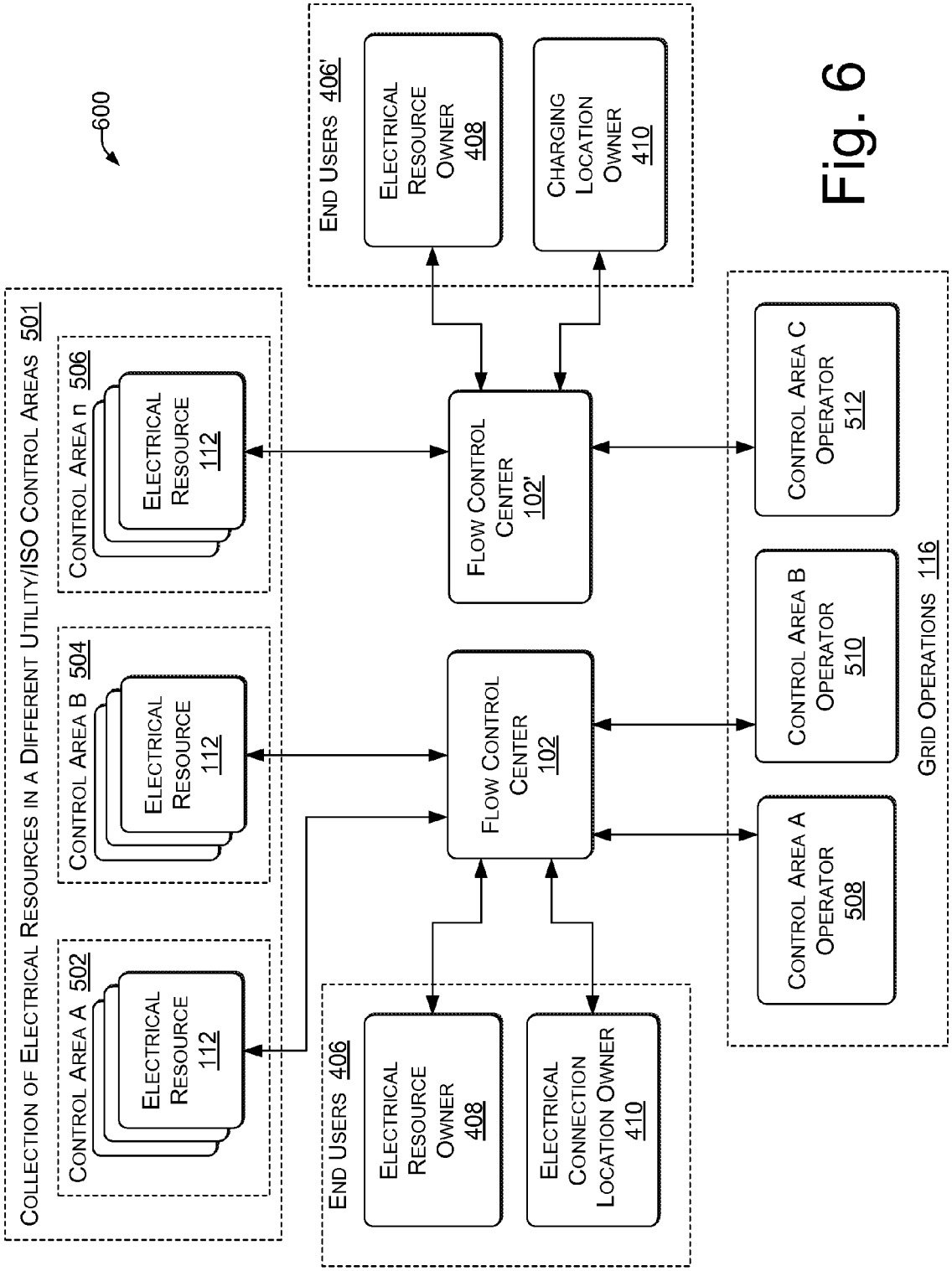
600
COLLECTION OF ELECTRICAL RESOURCES IN A DIFFERENT UTILITY/ISO CONTROL AREAS 501
CONTROL AREA A 502
ELECTRICAL RESOURCE 112
CONTROL AREA B 504
ELECTRICAL RESOURCE 112
CONTROL AREA n 506
ELECTRICAL RESOURCE 112
END USERS 406
ELECTRICAL RESOURCE OWNER 408
ELECTRICAL CONNECTION LOCATION OWNER 410
FLOW CONTROL CENTER 102
FLOW CONTROL CENTER 102'
END USERS 406'
ELECTRICAL RESOURCE OWNER 408
CHARGING LOCATION OWNER 410
CONTROL AREA A OPERATOR 508
CONTROL AREA B OPERATOR 510
CONTROL AREA C OPERATOR 512
GRID OPERATIONS 116

Fig. 6

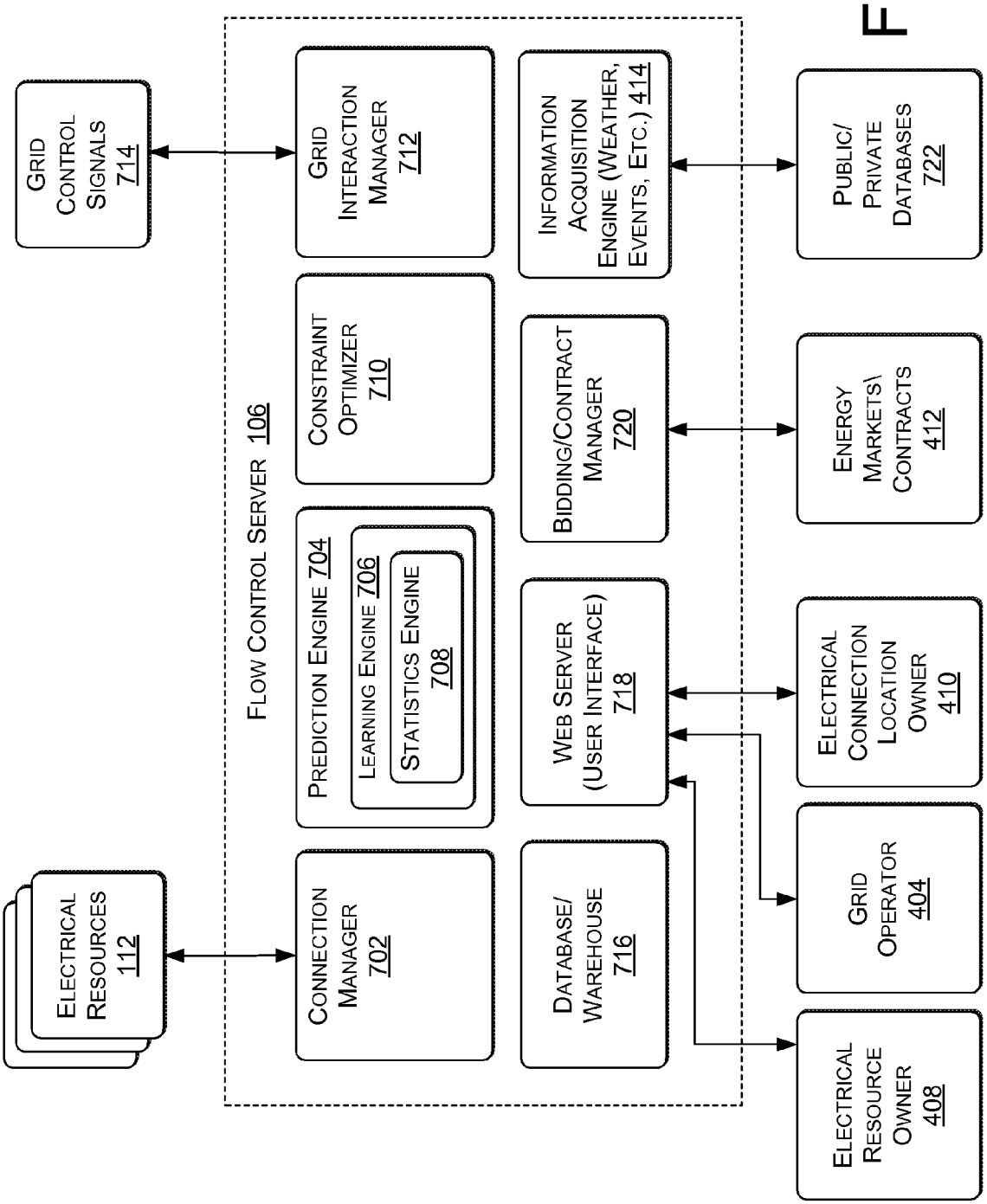
Grid Control Signals 714
Electrical Resources 112
Flow Control Server 106
Connection Manager 702
Prediction Engine 704
Learning Engine 706
Statistics Engine 708
Constraint Optimizer 710
Grid Interaction Manager 712
Database/ Warehouse 716
Web Server (User Interface) 718
Bidding/Contract Manager 720
Information Acquisition Engine (Weather, Events, Etc.) 414
Electrical Resource Owner 408
Grid Operator 404
Electrical Connection Location Owner 410
Energy Markets\ Contracts 412
Public/ Private Databases 722

Fig. 7

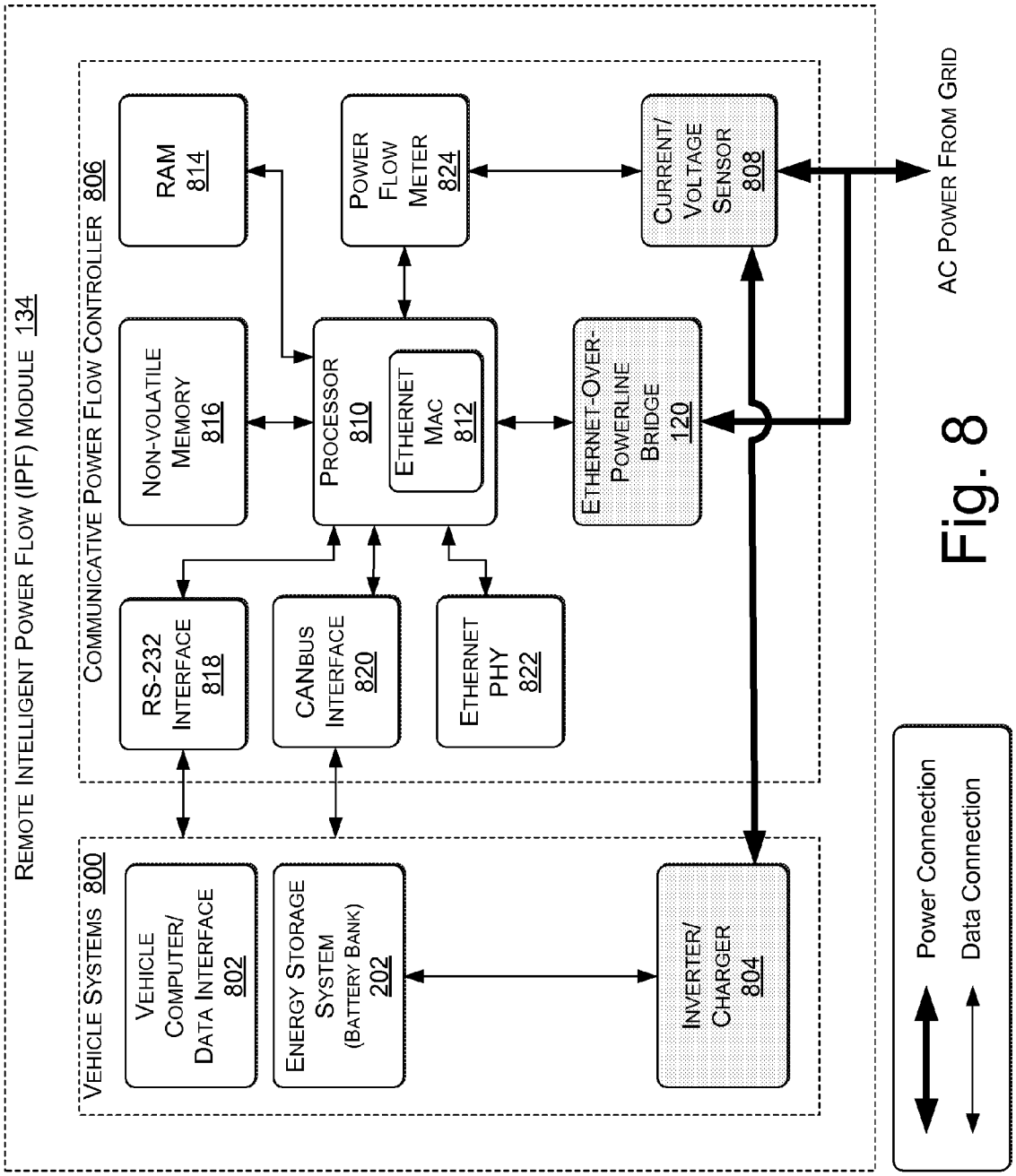
Remote Intelligent Power Flow (IPF) Module 134
Communicative Power Flow Controller 806
RAM 814
Power Flow Meter 824
Current/ Voltage Sensor 808
AC Power From Grid
Non-volatile Memory 816
Processor 810
Ethernet Mac 812
Ethernet-Over-Powerline Bridge 120
RS-232 Interface 818
CANBus Interface 820
Ethernet PHY 822
Vehicle Systems 800
Vehicle Computer/ Data Interface 802
Energy Storage System (Battery Bank) 202
Inverter/ Charger 804
Power Connection
Data Connection

Fig. 8

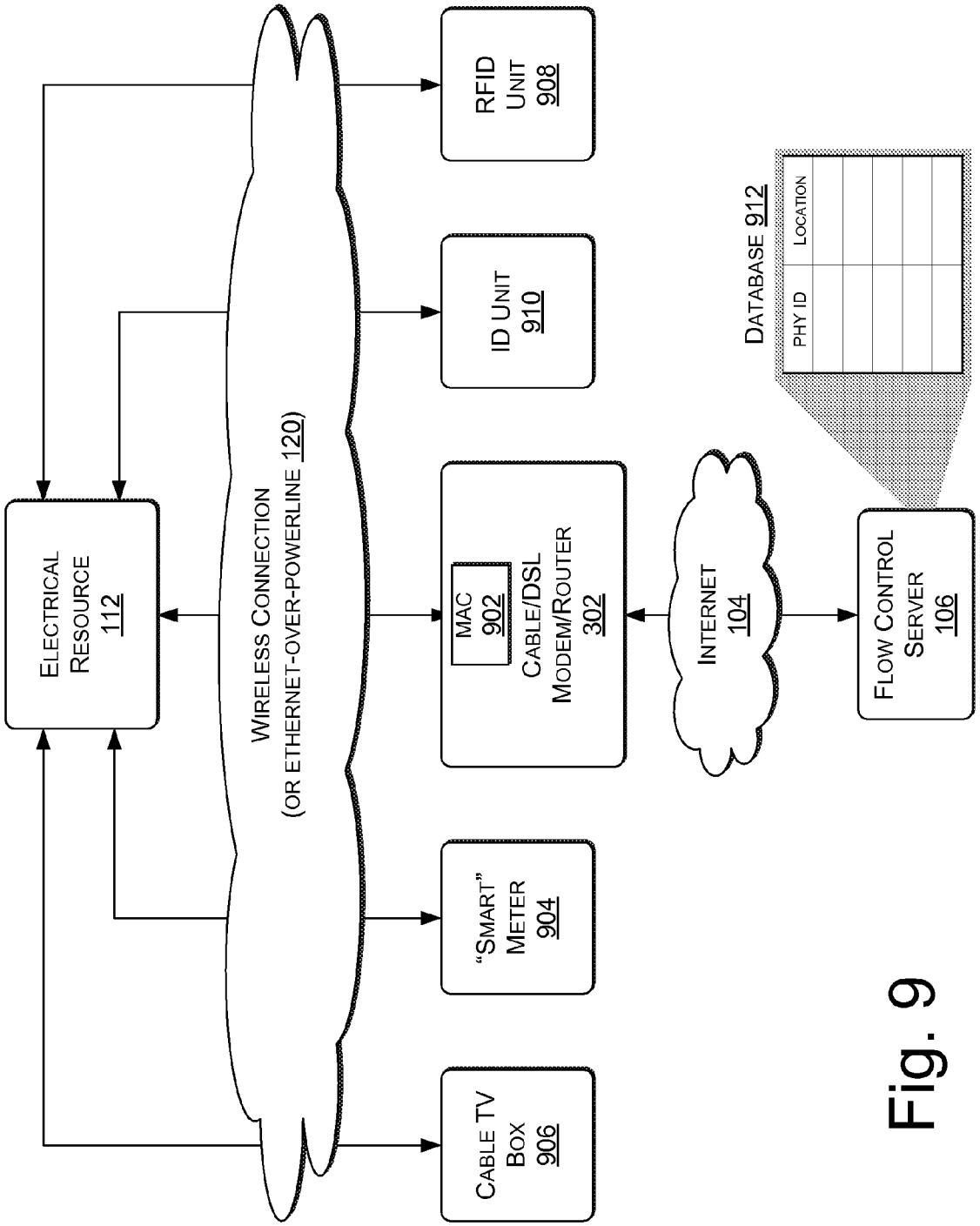
ELECTRICAL RESOURCE 112
WIRELESS CONNECTION (OR ETHERNET-OVER-POWERLINE 120)
RFID UNIT 908
ID UNIT 910
MAC 902
CABLE/DSL MODEM/ROUTER 302
"SMART" METER 904
CABLE TV BOX 906
INTERNET 104
FLOW CONTROL SERVER 106
DATABASE 912
PHY ID
LOCATION

Fig. 9

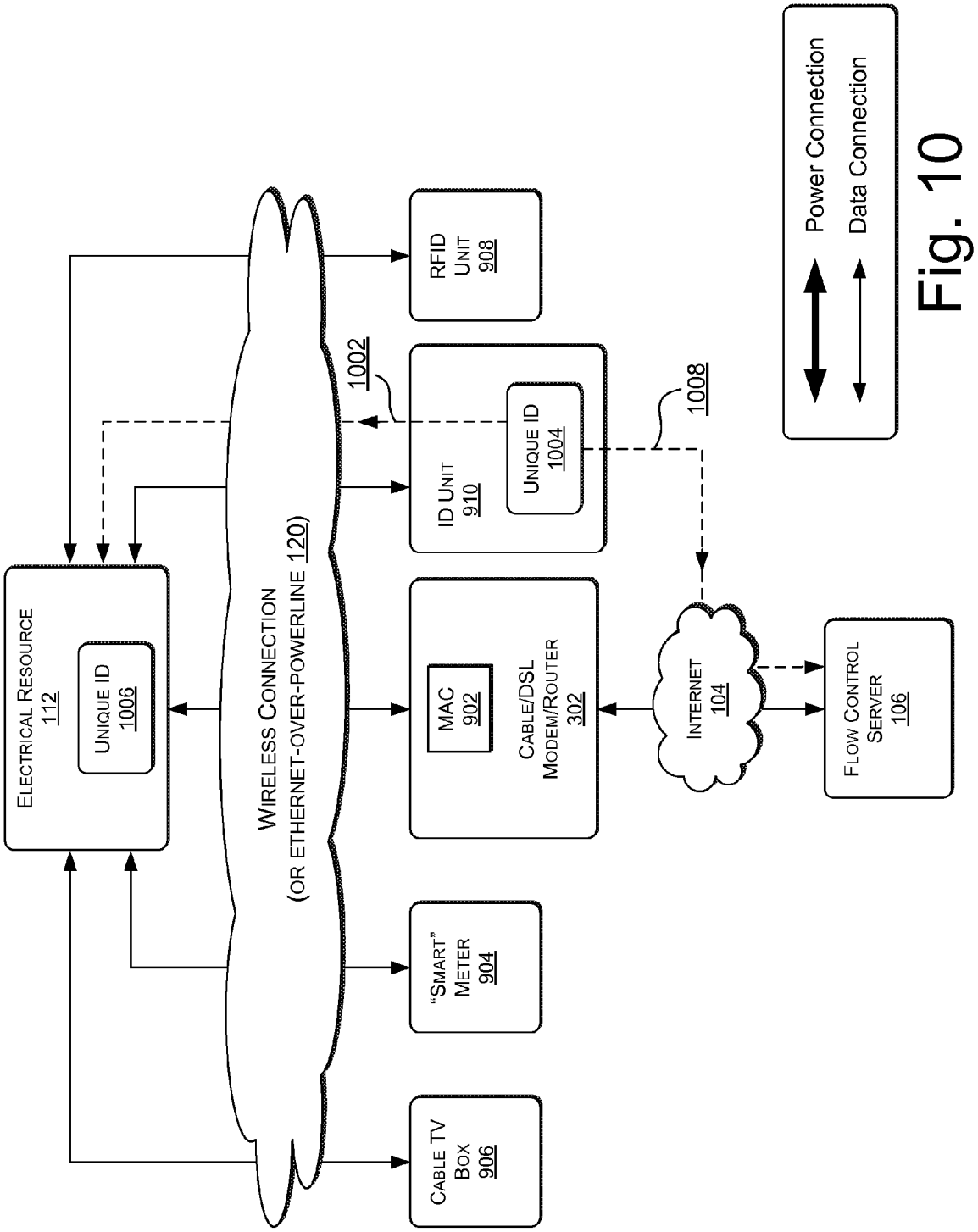
Electrical Resource
112
Unique ID
1006
Wireless Connection
(or Ethernet-over-powerline 120)
RFID
Unit
908
1002
ID Unit
910
Unique ID
1004
1008
MAC
902
Cable/DSL
Modem/Router
302
Internet
104
Flow Control
Server
106
"Smart"
Meter
904
Cable TV
Box
906
Power Connection
Data Connection

Fig. 10

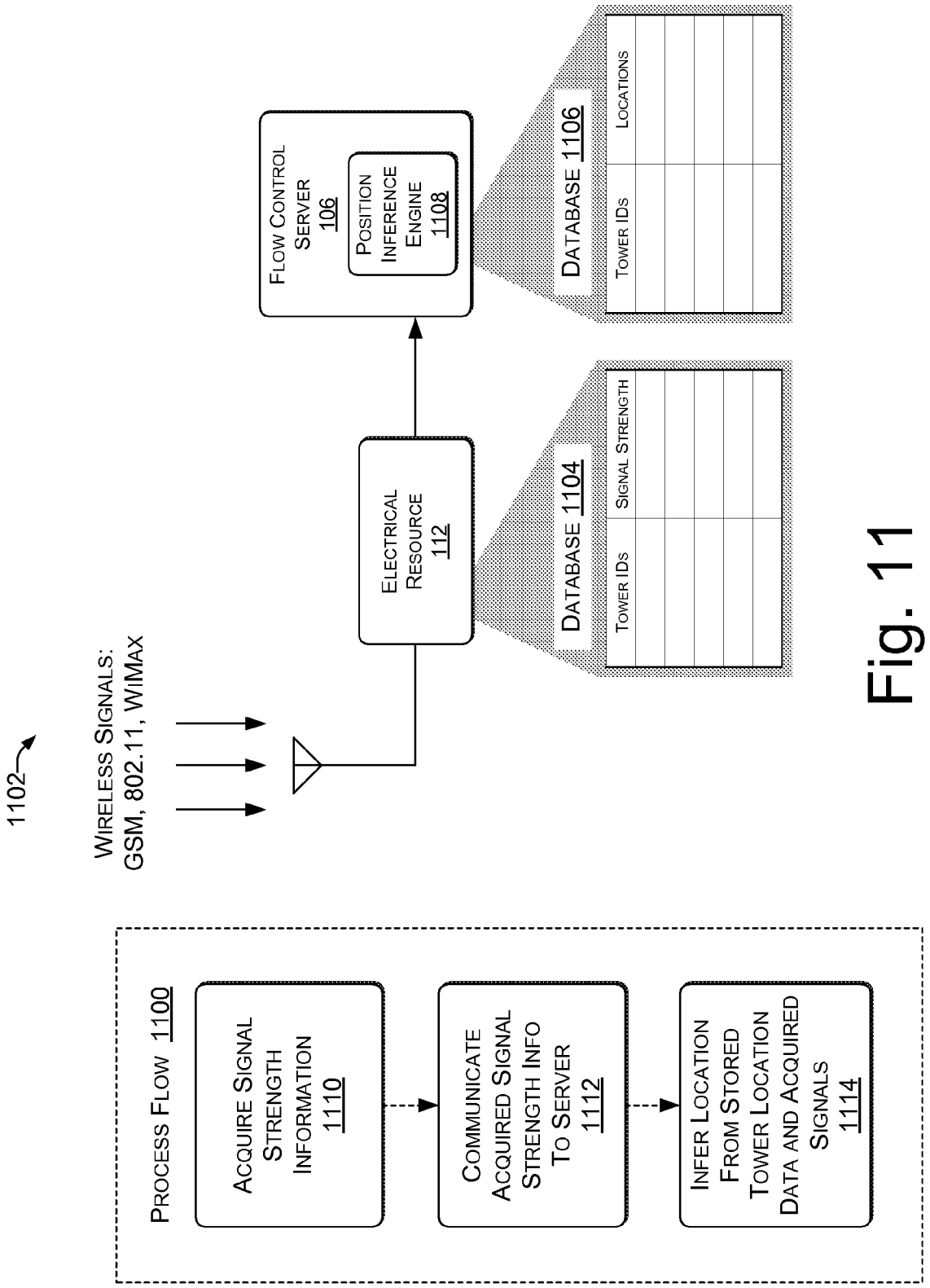
1102
Wireless Signals:
GSM, 802.11, WiMax
Electrical Resource 112
Flow Control Server 106
Position Inference Engine 1108
Database 1104
Tower IDs
Signal Strength
Database 1106
Tower IDs
Locations
Process Flow 1100
Acquire Signal Strength Information 1110
Communicate Acquired Signal Strength Info To Server 1112
Infer Location From Stored Tower Location Data and Acquired Signals 1114

Fig. 11

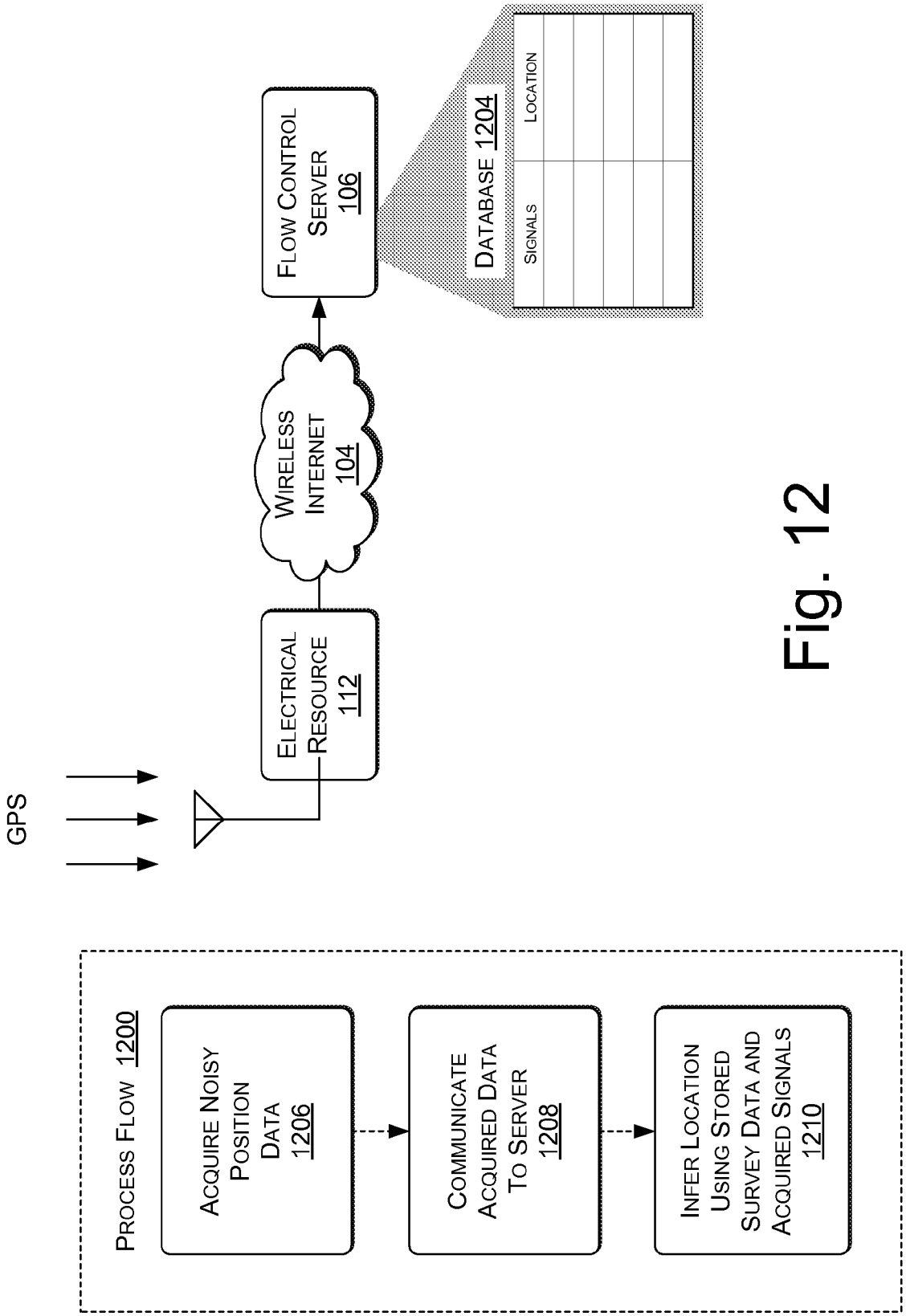
GPS
ELECTRICAL RESOURCE 112
WIRELESS INTERNET 104
FLOW CONTROL SERVER 106
DATABASE 1204
SIGNALS
LOCATION
PROCESS FLOW 1200
ACQUIRE NOISY POSITION DATA 1206
COMMUNICATE ACQUIRED DATA TO SERVER 1208
INFER LOCATION USING STORED SURVEY DATA AND ACQUIRED SIGNALS 1210

Fig. 12

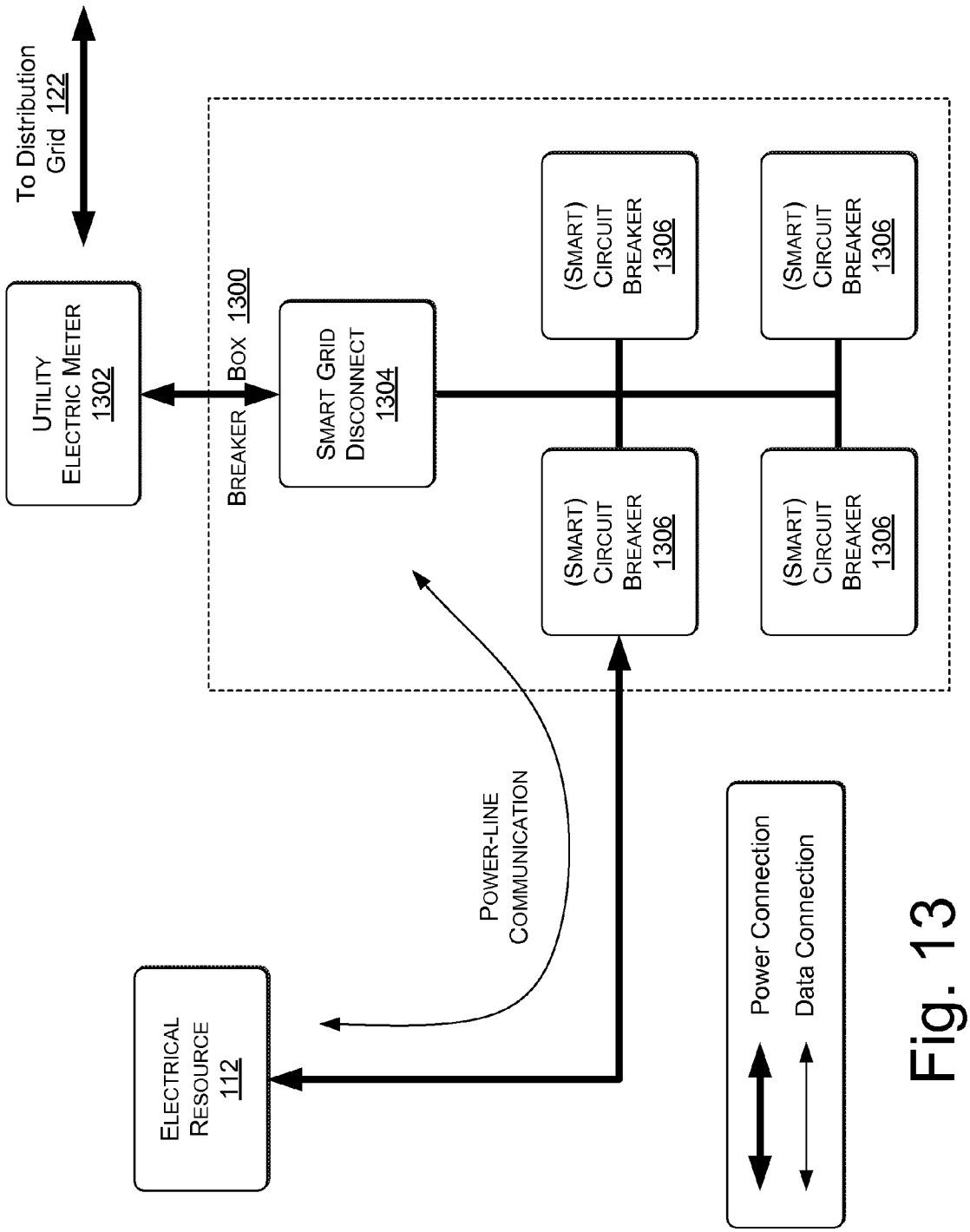
To Distribution Grid 122
Utility Electric Meter 1302
Breaker Box 1300
Smart Grid Disconnect 1304
(Smart) Circuit Breaker 1306
(Smart) Circuit Breaker 1306
(Smart) Circuit Breaker 1306
(Smart) Circuit Breaker 1306
Power-line Communication
Electrical Resource 112
Power Connection
Data Connection

Fig. 13

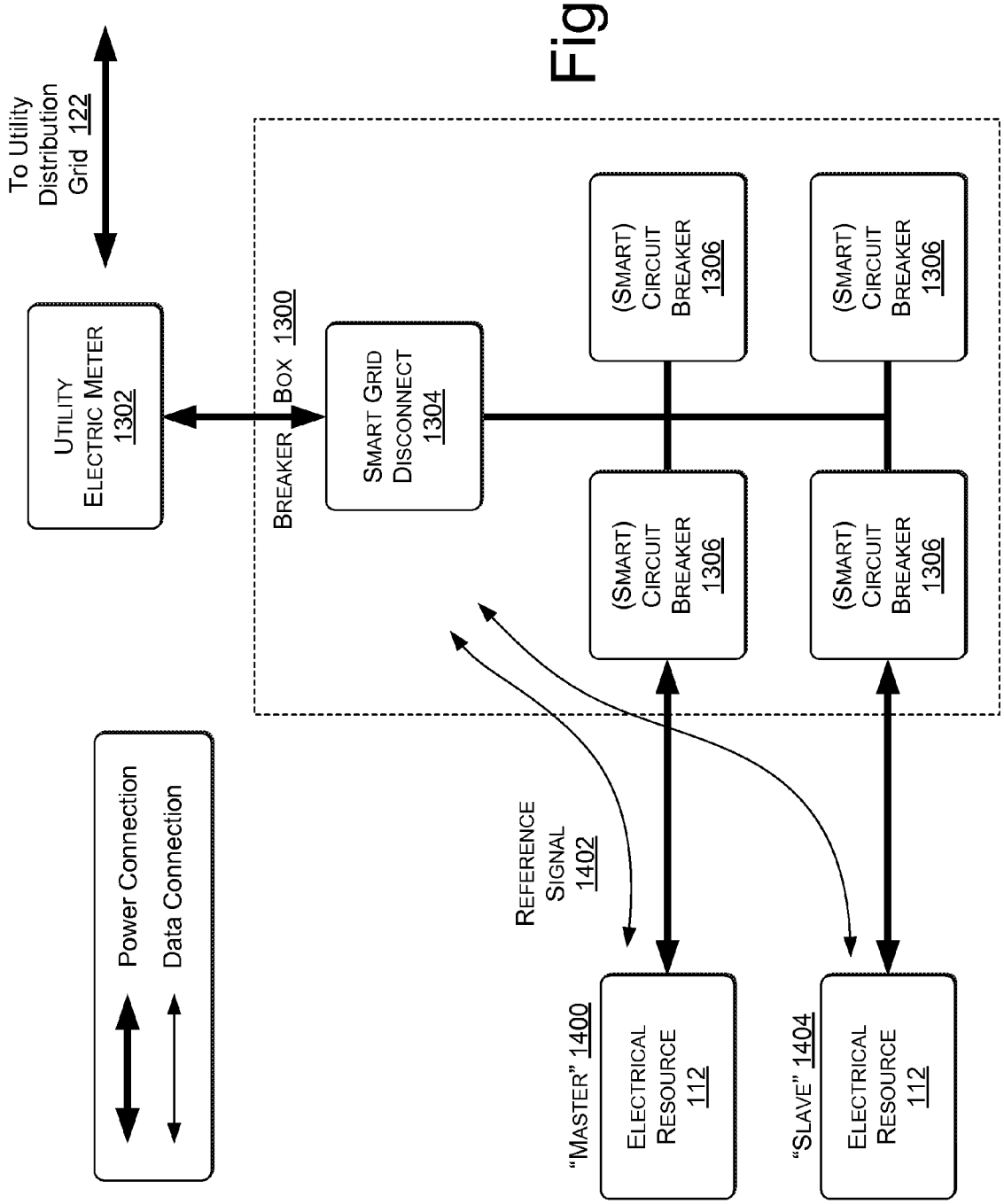
To Utility Distribution Grid 122
Utility Electric Meter 1302
Breaker Box 1300
Smart Grid Disconnect 1304
(Smart) Circuit Breaker 1306
(Smart) Circuit Breaker 1306
(Smart) Circuit Breaker 1306
(Smart) Circuit Breaker 1306
Reference Signal 1402
"Master" 1400
Electrical Resource 112
"Slave" 1404
Electrical Resource 112
Power Connection
Data Connection

Fig. 14

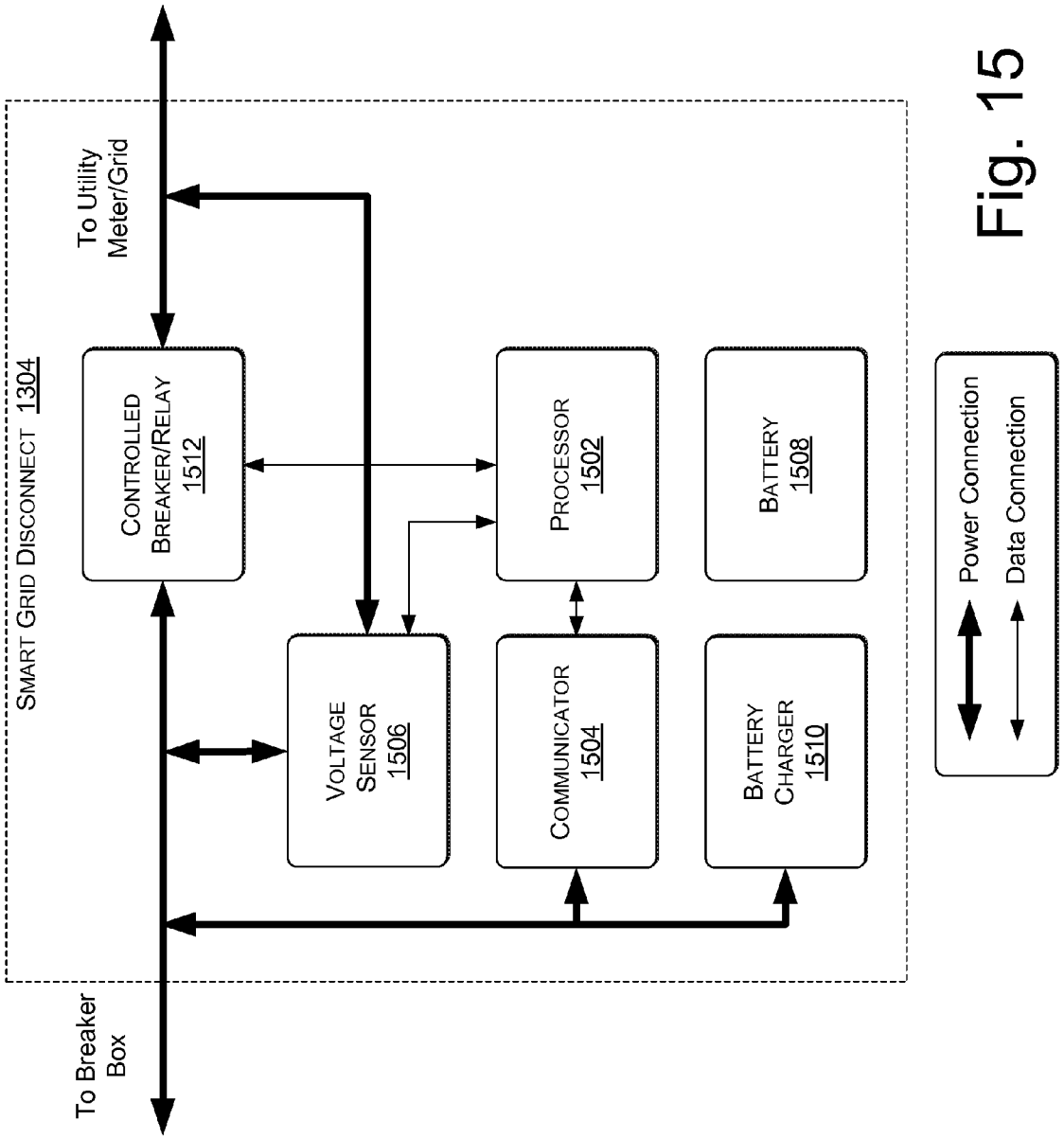
Smart Grid Disconnect 1304
To Utility Meter/Grid
Controlled Breaker/Relay 1512
Voltage Sensor 1506
Processor 1502
Communicator 1504
Battery 1508
Battery Charger 1510
To Breaker Box
Power Connection
Data Connection

Fig. 15

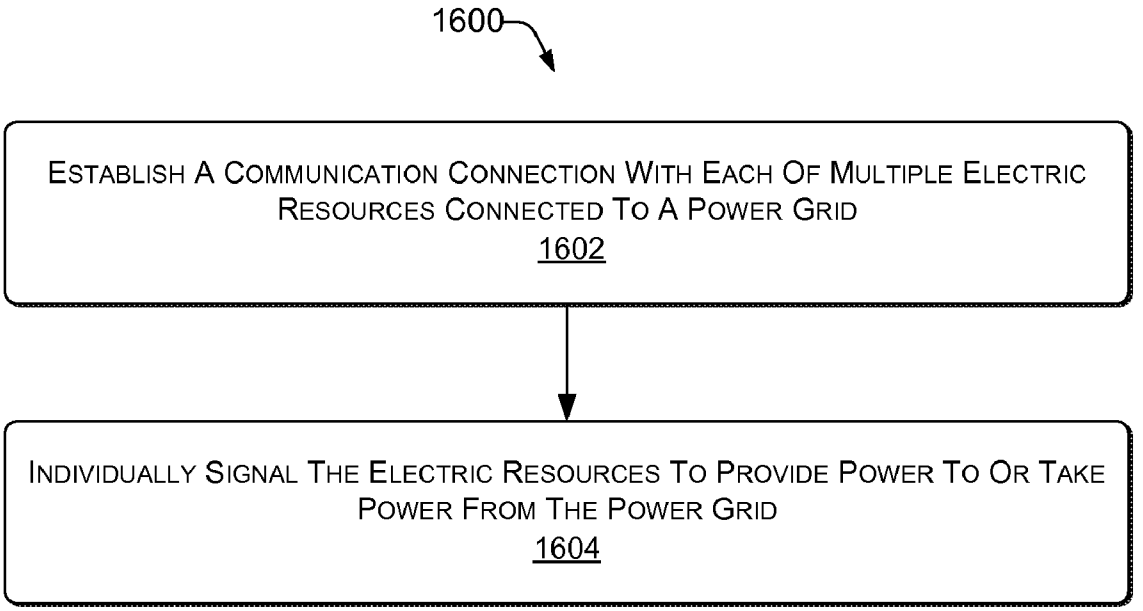
1600
ESTABLISH A COMMUNICATION CONNECTION WITH EACH OF MULTIPLE ELECTRIC RESOURCES CONNECTED TO A POWER GRID
1602
INDIVIDUALLY SIGNAL THE ELECTRIC RESOURCES TO PROVIDE POWER TO OR TAKE POWER FROM THE POWER GRID
1604

Fig. 16

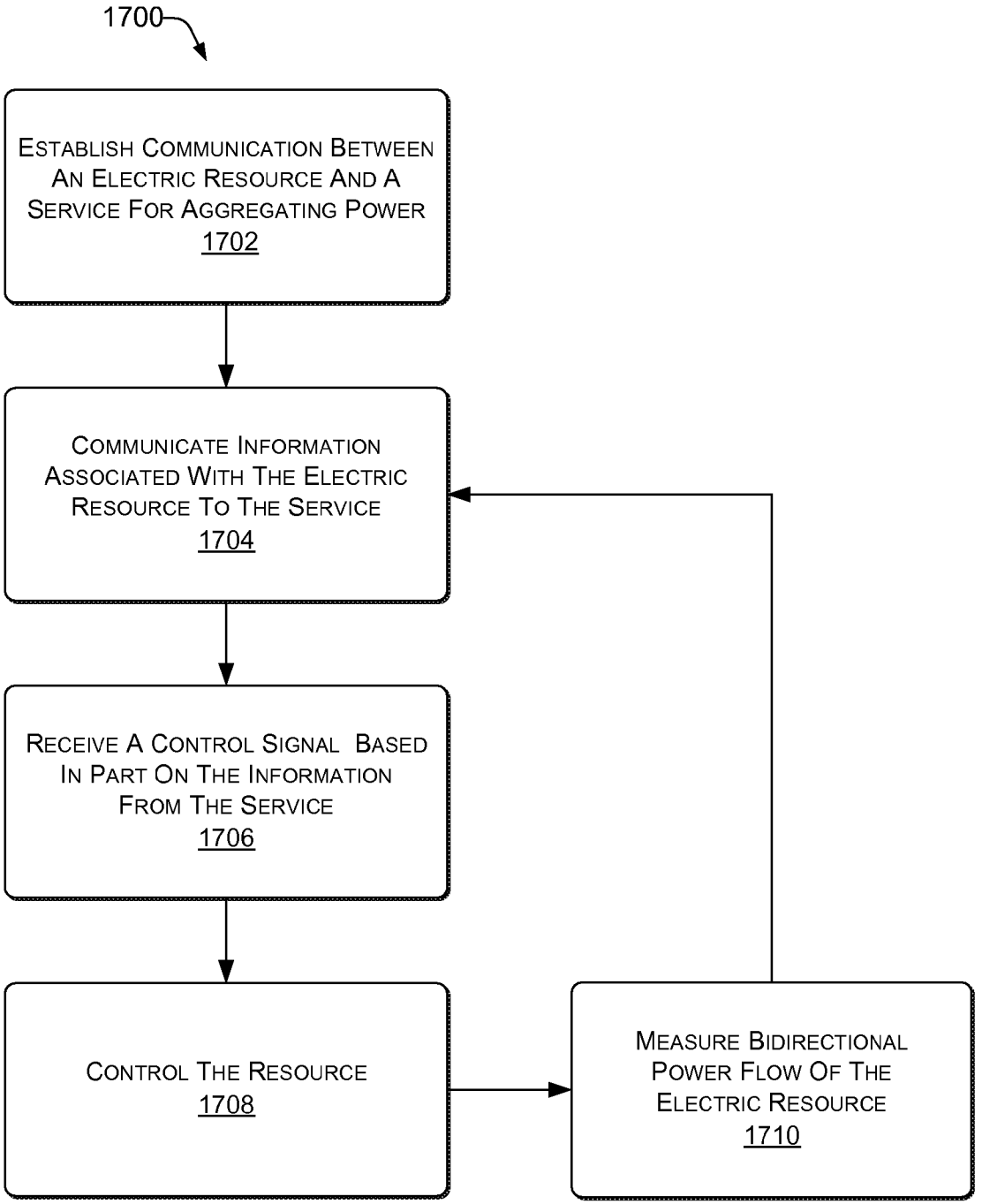
1700
Establish Communication Between An Electric Resource And A Service For Aggregating Power
1702
Communicate Information Associated With The Electric Resource To The Service
1704
Receive A Control Signal Based In Part On The Information From The Service
1706
Control The Resource
1708
Measure Bidirectional Power Flow Of The Electric Resource
1710

Fig. 17

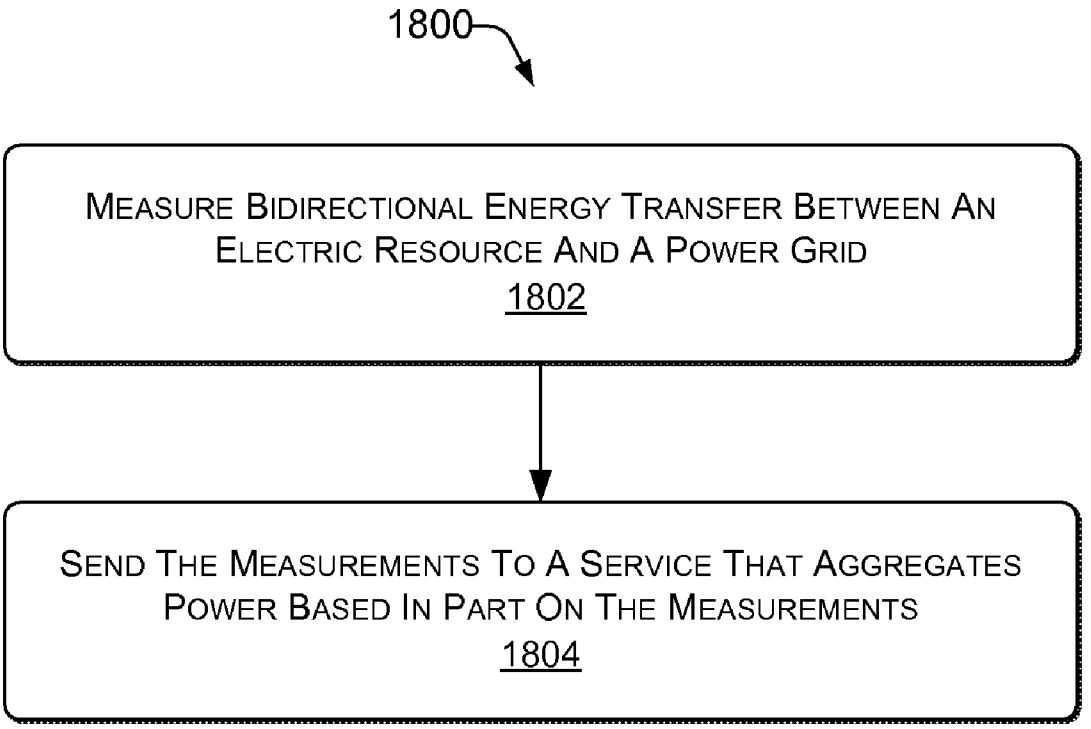
1800
MEASURE BIDIRECTIONAL ENERGY TRANSFER BETWEEN AN ELECTRIC RESOURCE AND A POWER GRID
1802
SEND THE MEASUREMENTS TO A SERVICE THAT AGGREGATES POWER BASED IN PART ON THE MEASUREMENTS
1804

Fig. 18

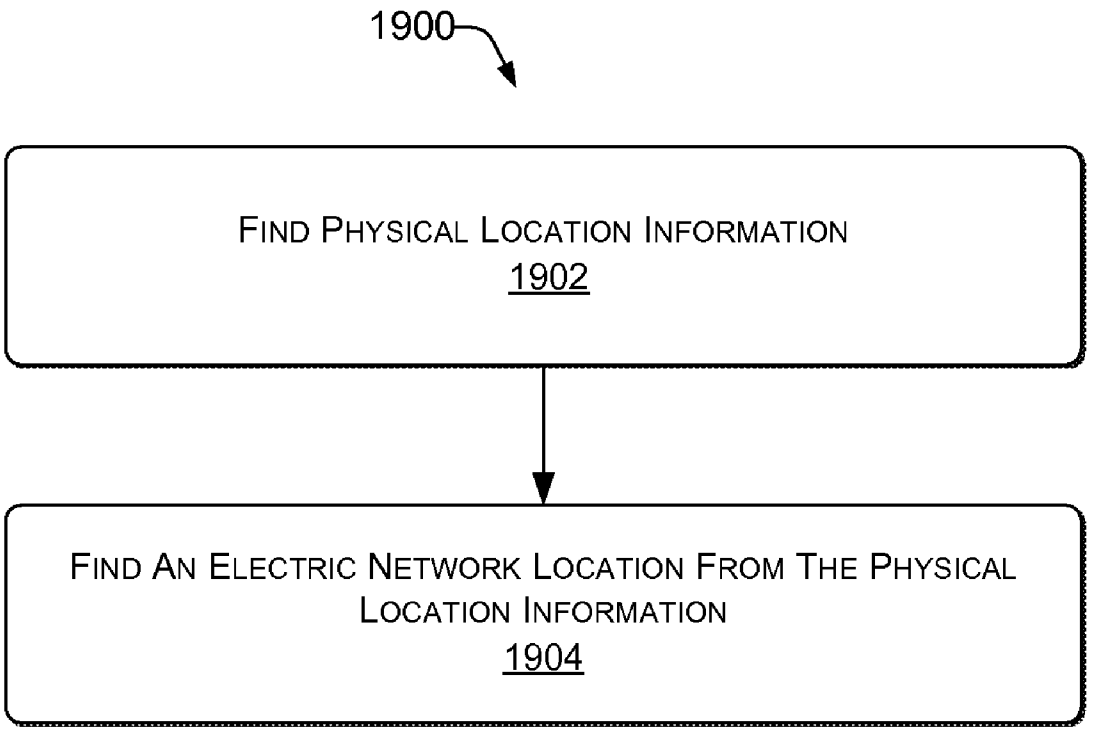
1900
FIND PHYSICAL LOCATION INFORMATION
1902
FIND AN ELECTRIC NETWORK LOCATION FROM THE PHYSICAL LOCATION INFORMATION
1904

Fig. 19

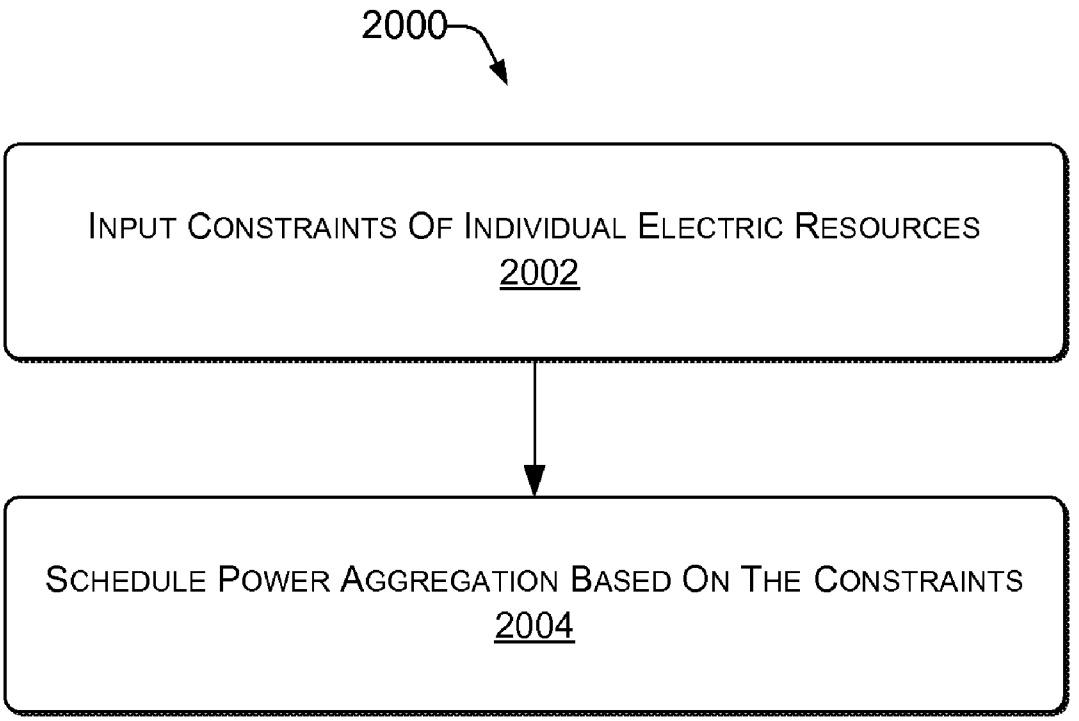
2000
INPUT CONSTRAINTS OF INDIVIDUAL ELECTRIC RESOURCES
2002
SCHEDULE POWER AGGREGATION BASED ON THE CONSTRAINTS
2004

Fig. 20

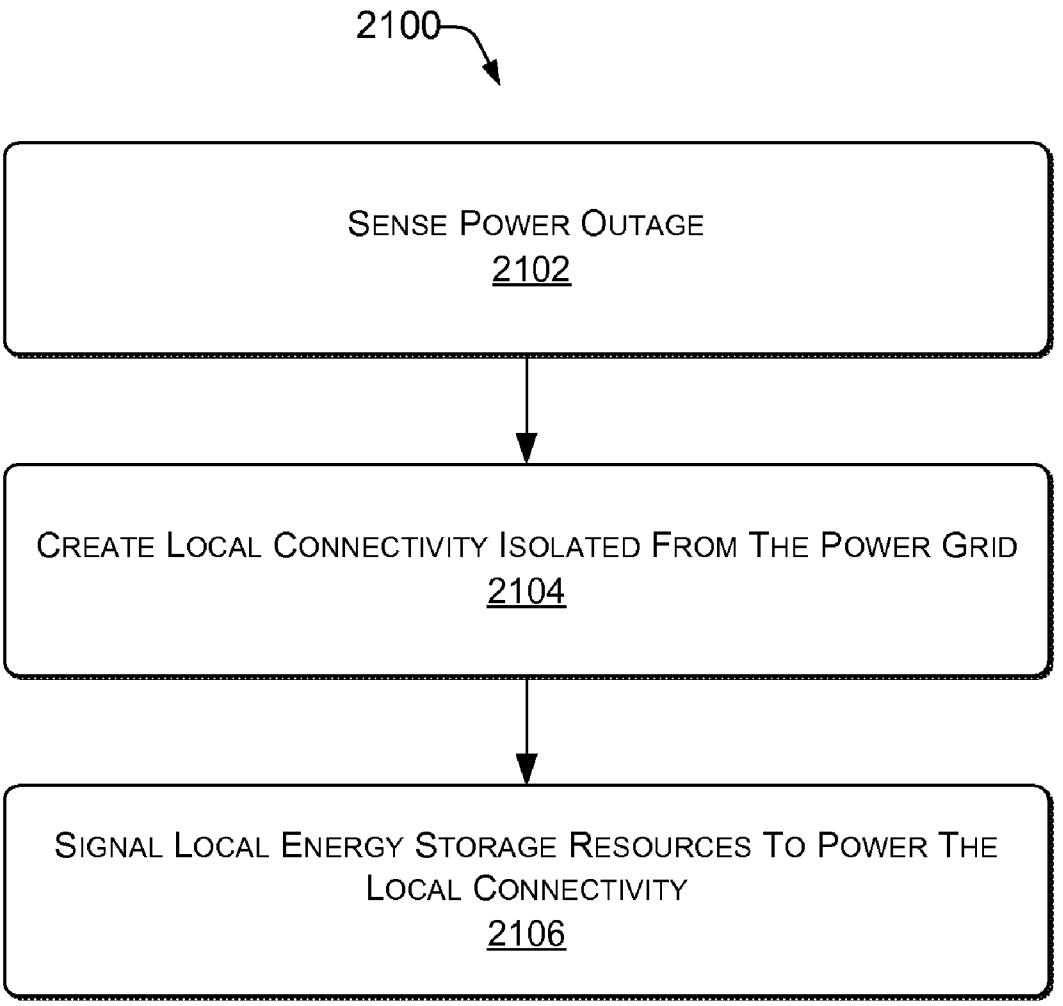
2100
SENSE POWER OUTAGE
2102
CREATE LOCAL CONNECTIVITY ISOLATED FROM THE POWER GRID
2104
SIGNAL LOCAL ENERGY STORAGE RESOURCES TO POWER THE LOCAL CONNECTIVITY
2106

Fig. 21

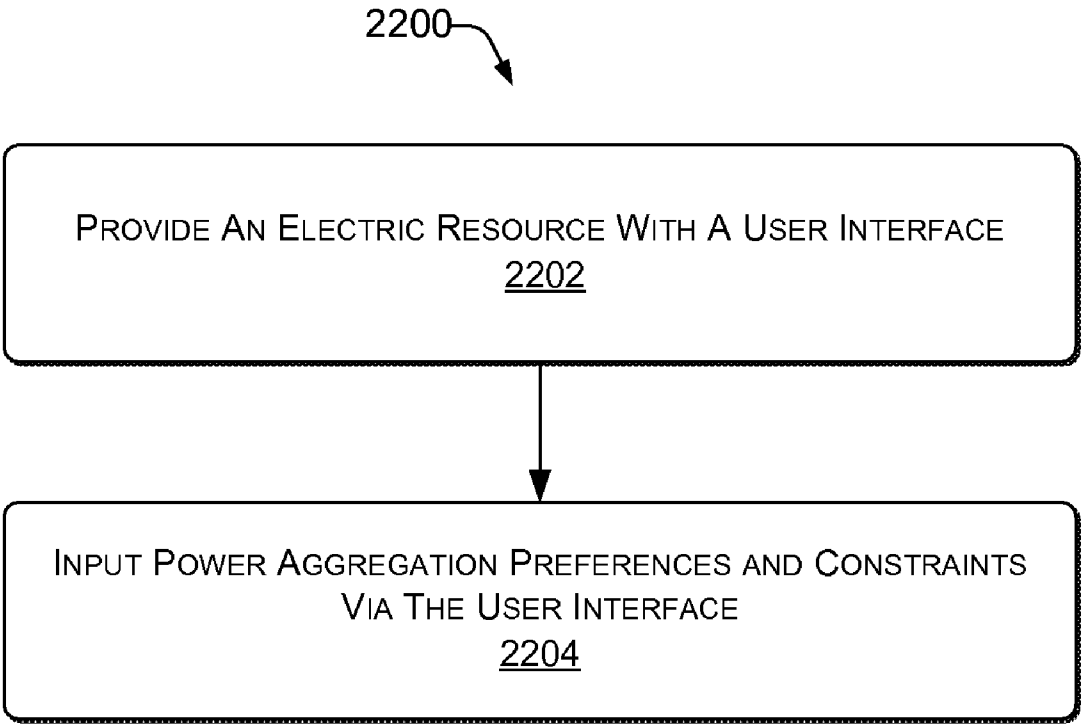
2200
PROVIDE AN ELECTRIC RESOURCE WITH A USER INTERFACE
2202
INPUT POWER AGGREGATION PREFERENCES AND CONSTRAINTS VIA THE USER INTERFACE
2204

Fig. 22

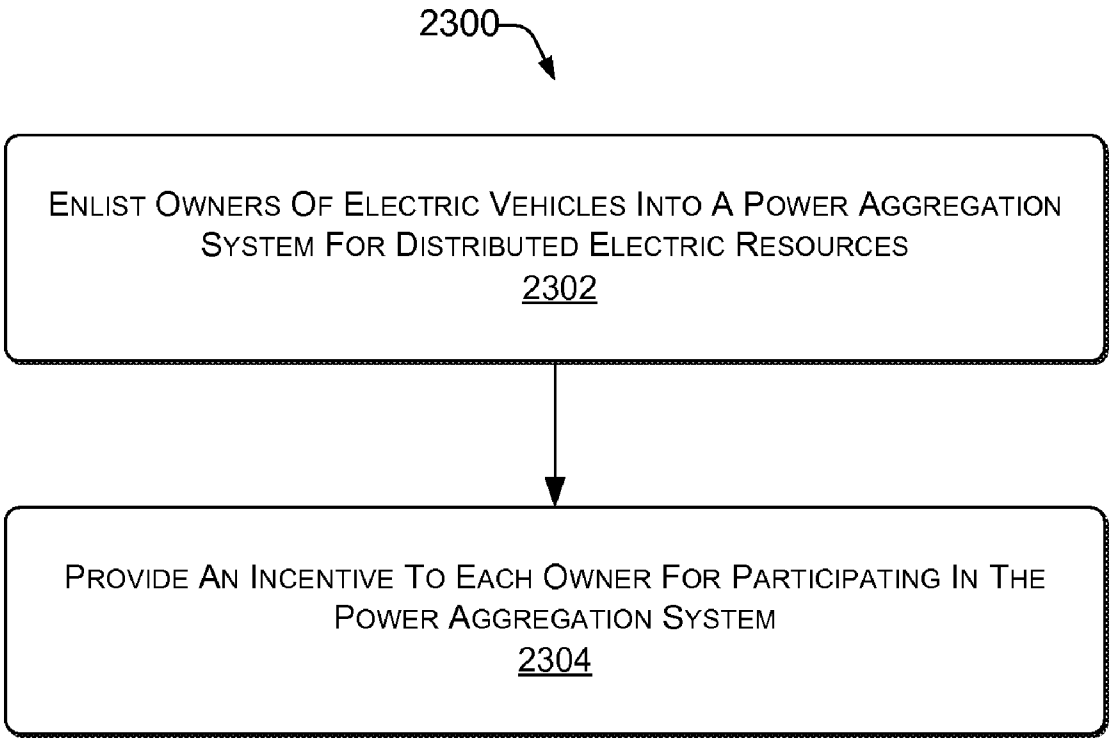
2300
ENLIST OWNERS OF ELECTRIC VEHICLES INTO A POWER AGGREGATION SYSTEM FOR DISTRIBUTED ELECTRIC RESOURCES
2302
PROVIDE AN INCENTIVE TO EACH OWNER FOR PARTICIPATING IN THE POWER AGGREGATION SYSTEM
2304

Fig. 23

SCHEDULING AND CONTROL IN A POWER AGGREGATION SYSTEM FOR DISTRIBUTED ELECTRIC RESOURCES

RELATED APPLICATIONS

[0001] This application claims priority to U.S. Provisional Patent Application No. 60/822,047 to David L. Kaplan, entitled, "Vehicle-to-Grid Power Flow Management System," filed Aug. 10, 2006 and incorporated herein by reference; U.S. Provisional Patent Application No. 60/869,439 to Seth W. Bridges, David L. Kaplan, and Seth B. Pollack, entitled, "A Distributed Energy Storage Management System," filed Dec. 11, 2006 and incorporated herein by reference; and U.S. Provisional Patent Application No. 60/915,347 to Seth Bridges, Seth Pollack, and David Kaplan, entitled, "Plug-In-Vehicle Management System," filed May 1, 2007 and incorporated herein by reference.

[0002] This application is also related to U.S. patent application Ser. No. _____, Attorney docket no. VR1-0003US, entitled, "Power Aggregation System for Distributed Electric Resources" by Kaplan et al., filed concurrently on Aug. 9, 2007, and incorporated herein by reference; to U.S. patent application Ser. No. _____, Attorney docket no. VR1-0003USC1, entitled, "Electric Resource Module in a Power Aggregation System for Distributed Electric Resources" by Bridges et al., filed concurrently on Aug. 9, 2007, and incorporated herein by reference; to U.S. patent application Ser. No. _____, Attorney docket no. VR1-0003USC2, entitled, "Electric Resource Power Meter in a Power Aggregation System for Distributed Electric Resources" by Bridges et al., filed concurrently on Aug. 9, 2007, and incorporated herein by reference; to U.S. patent application Ser. No. _____, Attorney docket no. VR1-0003USC3, entitled, "Connection Locator in a Power Aggregation System for Distributed Electric Resources" by Bridges et al., filed concurrently on Aug. 9, 2007, and incorporated herein by reference; to U.S. patent application Ser. No. _____, Attorney docket no. VR1-0003USC5, entitled, "Smart Islanding and Power Backup in a Power Aggregation System for Distributed Electric Resources" by Bridges et al., filed concurrently on Aug. 9, 2007, and incorporated herein by reference; to U.S. patent application Ser. No. _____, Attorney docket no. VR1-0003USC6, entitled, "User Interface and User Control in a Power Aggregation System for Distributed Electric Resources" by Pollack et al., filed concurrently on Aug. 9, 2007, and incorporated herein by reference; and to U.S. patent application Ser. No. _____, Attorney docket no. VR1-0003USC7, entitled, "Business Methods in a Power Aggregation System for Distributed Electric Resources" by Pollack et al., filed concurrently on Aug. 9, 2007, and incorporated herein by reference.

BACKGROUND

[0003] Today's electric power and transportation systems suffer from a number of drawbacks. Pollution, especially greenhouse gas emissions, is prevalent because approximately half of all electric power generated in the United States is produced by burning coal. Virtually all vehicles in the United States are powered by burning petroleum products, such as gasoline or petro-diesel. It is now widely recognized that human consumption of these fossil fuels is the major cause of elevated levels of atmospheric greenhouse gases, especially carbon dioxide (CO_2), which in turn disrupts the global climate, often with destructive side effects. Besides producing greenhouse gases, burning fossil fuels also add substantial amounts of toxic pollutants to the atmosphere and environment. The transportation system, with its high dependence on fossil fuels, is especially carbon-intensive. That is, physical units of work performed in the transportation system typically discharge a significantly larger amount of CO_2 into the atmosphere than the same units of work performed electrically.

[0004] With respect to the electric power grid, expensive peak power—electric power delivered during periods of peak demand—can cost substantially more than off-peak power. The electric power grid itself has become increasingly unreliable and antiquated, as evidenced by frequent large-scale power outages. Grid instability wastes energy, both directly and indirectly (for example, by encouraging power consumers to install inefficient forms of backup generation).

[0005] While clean forms of energy generation, such as wind and solar, can help to address the above problems, they suffer from intermittency. Hence, grid operators are reluctant to rely heavily on these sources, making it difficult to move away from standard, typically carbon-intensive forms of electricity.

[0006] The electric power grid contains limited inherent facility for storing electrical energy. Electricity must be generated constantly to meet uncertain demand, which often results in over-generation (and hence wasted energy) and sometimes results in under-generation (and hence power failures).

[0007] Distributed electric resources, en masse can, in principle, provide a significant resource for addressing the above problems. However, current power services infrastructure lacks provisioning and flexibility that are required for aggregating a large number of small-scale resources (e.g., electric vehicle batteries) to meet medium- and large-scale needs of power services.

[0008] Thus, significant opportunities for improvement exist in the electrical and transportation sectors, and in the way these sectors interact. Fuel-powered vehicles could be replaced with vehicles whose power comes entirely or substantially from electricity. Polluting forms of electric power generation could be replaced with clean ones. Real-time balancing of generation and load can be realized with reduced cost and environmental impact. More economical, reliable electrical power can be provided at times of peak demand. Power services, such as regulation and spinning reserves, can be provided to electricity markets to stabilize the grid and provide a significant economic opportunity. Technologies can be enabled to provide broader use of intermittent power sources, such as wind and solar.

[0009] Robust, grid-connected electrical storage could store electrical energy during periods of over-production for redelivery to the grid during periods of under-supply. Electric vehicle batteries in vast numbers could participate in this grid-connected storage. However, a single vehicle battery is insignificant when compared with the needs of the power grid. What is needed is a way to coordinate vast numbers of electric vehicle batteries, as electric vehicles become more popular and prevalent.

[0010] Low-level electrical and communication interfaces to enable charging and discharging of electric vehicles with respect to the grid is described in U.S. Pat. No. 5,642,270 to Green et al., entitled, "Battery powered electric vehicle and electrical supply system," incorporated herein by reference. The Green reference describes a bi-directional charging and communication system for grid-connected electric vehicles, but does not address the information processing requirements of dealing with large, mobile populations of electric vehicles, the complexities of billing (or compensating) vehicle owners, nor the complexities of assembling mobile pools of electric vehicles into aggregate power resources robust enough to support firm power service contracts with grid operators.

BRIEF DESCRIPTION OF THE DRAWINGS

[0011] FIG. **1** is a diagram of an exemplary power aggregation system.

[0012] FIG. **2** is a diagram of exemplary connections between an electric vehicle, the power grid, and the Internet.

[0013] FIG. **3** is a block diagram of exemplary connections between an electric resource and a flow control server of the power aggregation system.

[0014] FIG. **4** is a diagram of an exemplary layout of the power aggregation system.

[0015] FIG. **5** is a diagram of exemplary control areas in the power aggregation system.

[0016] FIG. **6** is a diagram of multiple flow control centers in the power aggregation system.

[0017] FIG. **7** is a block diagram of an exemplary flow control server.

[0018] FIG. **8** is block diagram of an exemplary remote intelligent power flow module.

[0019] FIG. **9** is a diagram of a first exemplary technique for locating a connection location of an electric resource on a power grid.

[0020] FIG. **10** is a diagram of a second exemplary technique for locating a connection location of an electric resource on the power grid.

[0021] FIG. **11** is a diagram of a third exemplary technique for locating a connection location of an electric resource on the power grid.

[0022] FIG. **12** is a diagram of a fourth exemplary technique for locating a connection location of an electric resource on the power grid network.

[0023] FIG. **13** is diagram of exemplary safety measures in a vehicle-to-home implementation of the power aggregation system.

[0024] FIG. **14** is a diagram of exemplary safety measures when multiple electric resources flow power to a home in the power aggregation system.

[0025] FIG. **15** is a block diagram of an exemplary smart disconnect of the power aggregation system.

[0026] FIG. **16** is a flow diagram of an exemplary method of power aggregation.

[0027] FIG. **17** is a flow diagram of an exemplary method of communicatively controlling an electric resource for power aggregation.

[0028] FIG. **18** is a flow diagram of an exemplary method of metering bidirectional power of an electric resource.

[0029] FIG. **19** is a flow diagram of an exemplary method of determining an electric network location of an electric resource.

[0030] FIG. **20** is a flow diagram of an exemplary method of scheduling power aggregation.

[0031] FIG. **21** is a flow diagram of an exemplary method of smart islanding.

[0032] FIG. **22** is a flow diagram of an exemplary method of extending a user interface for power aggregation.

[0033] FIG. **23** is a flow diagram of an exemplary method of gaining and maintaining electric vehicle owners in a power aggregation system.

DETAILED DESCRIPTION

[0034] Overview

[0035] Described herein is a power aggregation system for distributed electric resources, and associated methods. In one implementation, the exemplary system communicates over the Internet and/or some other public or private networks with numerous individual electric resources connected to a power grid (hereinafter, "grid"). By communicating, the exemplary system can dynamically aggregate these electric resources to provide power services to grid operators (e.g. utilities, Independent System Operators (ISO), etc). "Power services" as used herein, refers to energy delivery as well as other ancillary services including demand response, regulation, spinning reserves, non-spinning reserves, energy imbalance, and similar products. "Aggregation" as used herein refers to the ability to control power flows into and out of a set of spatially distributed electric resources with the purpose of providing a power service of larger magnitude. "Power grid operator" as used herein, refers to the entity that is responsible for maintaining the operation and stability of the power grid within or across an electric control area. The power grid operator may constitute some combination of manual/human action/intervention and automated processes controlling generation signals in response to system sensors. A "control area operator" is one example of a power grid operator. "Control area" as used herein, refers to a contained portion of the electrical grid with defined input and output ports. The net flow of power into this area must equal (within some error tolerance) the sum of the power consumption within the area and power outflow from the area.

[0036] "Power grid" as used herein means a power distribution system/network that connects producers of power with consumers of power. The network may include generators, transformers, interconnects, switching stations, and safety equipment as part of either/both the transmission system (i.e., bulk power) or the distribution system (i.e. retail power). The exemplary power aggregation system is vertically scalable for use with a neighborhood, a city, a sector, a control area, or (for example) one of the eight large-scale Interconnects in the North American Electric Reliability Council (NERC). Moreover, the exemplary sys-

tem is horizontally scalable for use in providing power services to multiple grid areas simultaneously.

[0037] "Grid conditions" as used herein, means the need for more or less power flowing in or out of a section of the electric power grid, in a response to one of a number of conditions, for example supply changes, demand changes, contingencies and failures, ramping events, etc. These grid conditions typically manifest themselves as power quality events such as under- or over-voltage events and under- or over-frequency events.

[0038] "Power quality events" as used herein typically refers to manifestations of power grid instability including voltage deviations and frequency deviations; additionally, power quality events as used herein also includes other disturbances in the quality of the power delivered by the power grid such as sub-cycle voltage spikes and harmonics.

[0039] "Electric resource" as used herein typically refers to electrical entities that can be commanded to do some or all of these three things: take power (act as load), provide power (act as power generation or source), and store energy. Examples may include battery/charger/inverter systems for electric or hybrid vehicles, repositories of used-but-serviceable electric vehicle batteries, fixed energy storage, fuel cell generators, emergency generators, controllable loads, etc.

[0040] "Electric vehicle" is used broadly herein to refer to pure electric and hybrid electric vehicles, such as plug-in hybrid electric vehicles (PHEVs), especially vehicles that have significant storage battery capacity and that connect to the power grid for recharging the battery. More specifically, electric vehicle means a vehicle that gets some or all of its energy for motion and other purposes from the power grid. Moreover, an electric vehicle has an energy storage system, which may consist of batteries, capacitors, etc., or some combination thereof. An electric vehicle may or may not have the capability to provide power back to the electric grid.

[0041] Electric vehicle "energy storage systems" (batteries, supercapacitors, and/or other energy storage devices) are used herein as a representative example of electric resources intermittently or permanently connected to the grid that can have dynamic input and output of power. Such batteries can function as a power source or a power load. A collection of aggregated electric vehicle batteries can become a statistically stable resource across numerous batteries, despite recognizable tidal connection trends (e.g., an increase in the total umber of vehicles connected to the grid at night; a downswing in the collective number of connected batteries as the morning commute begins, etc.) Across vast numbers of electric vehicle batteries, connection trends are predictable and such batteries become a stable and reliable resource to call upon, should the grid or a part of the grid (such as a person's home in a blackout) experience a need for increased or decreased power. Data collection and storage also enable the power aggregation system to predict connection behavior on a per-user basis.

[0042] Exemplary System

[0043] FIG. **1** shows an exemplary power aggregation system **100**. A flow control center **102** is communicatively coupled with a network, such as a public/private mix that includes the Internet **104**, and includes one or more servers **106** providing a centralized power aggregation service. "Internet"**104** will be used herein as representative of many different types of communicative networks and network mixtures. Via a network, such as the Internet **104**, the flow control center **102** maintains communication **108** with operators of power grid(s), and communication **110** with remote resources, i.e., communication with peripheral electric resources **112** ("end" or "terminal" nodes/devices of a power network) that are connected to the power grid **114**. In one implementation, powerline communicators (PLCs), such as those that include or consist of Ethernet-over-powerline bridges **120** are implemented at connection locations so that the "last mile" (in this case, last feet—e.g., in a residence **124**) of Internet communication with remote resources is implemented over the same wire that connects each electric resource **112** to the power grid **114**. Thus, each physical location of each electric resource **112** may be associated with a corresponding Ethernet-over-powerline bridge **120** (hereinafter, "bridge") at or near the same location as the electric resource **112**. Each bridge **120** is typically connected to an Internet access point of a location owner, as will be described in greater detail below. The communication medium from flow control center **102** to the connection location, such as residence **124**, can take many forms, such as cable modem, DSL, satellite, fiber, WiMax, etc. In a variation, electric resources **112** may connect with the Internet by a different medium than the same power wire that connects them to the power grid **114**. For example, a given electric resource **112** may have its own wireless capability to connect directly with the Internet **104** and thereby with the flow control center **102**.

[0044] Electric resources **112** of the exemplary power aggregation system **100** may include the batteries of electric vehicles connected to the power grid **114** at residences **124**, parking lots **126** etc.; batteries in a repository **128**, fuel cell generators, private dams, conventional power plants, and other resources that produce electricity and/or store electricity physically or electrically.

[0045] In one implementation, each participating electric resource **112** or group of local resources has a corresponding remote intelligent power flow (IPF) module **134** (hereinafter, "remote IPF module"**134**). The centralized flow control center **102** administers the power aggregation system **100** by communicating with the remote IPF modules **134** distributed peripherally among the electric resources **112**. The remote IPF modules **134** perform several different functions, including providing the flow control center **102** with the statuses of remote resources; controlling the amount, direction, and timing of power being transferred into or out of a remote electric resource **112**; provide metering of power being transferred into or out of a remote electric resource **112**; providing safety measures during power transfer and changes of conditions in the power grid **114**; logging activities; and providing self-contained control of power transfer and safety measures when communication with the flow control center **102** is interrupted. The remote IPF modules **134** will be described in greater detail below.

[0046] FIG. **2** shows another view of exemplary electrical and communicative connections to an electric resource **112**. In this example, an electric vehicle **200** includes a battery bank **202** and an exemplary remote IPF module **134**. The electric vehicle **200** may connect to a conventional wall receptacle (wall outlet) **204** of a residence **124**, the wall

receptacle **204** representing the peripheral edge of the power grid **114** connected via a residential powerline **206**.

[**0047**] In one implementation, the power cord **208** between the electric vehicle **200** and the wall outlet **204** can be composed of only conventional wire and insulation for conducting alternating current (AC) power to and from the electric vehicle **200**. In FIG. **2**, a location-specific connection locality module **210** performs the function of network access point—in this case, the Internet access point. A bridge **120** intervenes between the receptacle **204** and the network access point so that the power cord **208** can also carry network communications between the electric vehicle **200** and the receptacle **204**. With such a bridge **120** and connection locality module **210** in place in a connection location, no other special wiring or physical medium is needed to communicate with the remote IPF module **134** of the electric vehicle **200** other than a conventional power cord **208** for providing residential line current at conventional voltage. Upstream of the connection locality module **210**, power and communication with the electric vehicle **200** are resolved into the powerline **206** and an Internet cable **104**.

[**0048**] Alternatively, the power cord **208** may include safety features not found in conventional power and extension cords. For example, an electrical plug **212** of the power cord **208** may include electrical and/or mechanical safeguard components to prevent the remote IPF module **134** from electrifying or exposing the male conductors of the power cord **208** when the conductors are exposed to a human user.

[**0049**] FIG. **3** shows another implementation of the connection locality module **210** of FIG. **2**, in greater detail. In FIG. **3**, an electric resource **112** has an associated remote IPF module **134**, including a bridge **120**. The power cord **208** connects the electric resource **112** to the power grid **114** and also to the connection locality module **210** in order to communicate with the flow control server **106**.

[**0050**] The connection locality module **210** includes another instance of a bridge **120'**, connected to a network access point **302**, which may include such components as a router, switch, and/or modem, to establish a hardwired or wireless connection with, in this case, the Internet **104**. In one implementation, the power cord **208** between the two bridges **120** and **120'** is replaced by a wireless Internet link, such as a wireless transceiver in the remote IPF module **134** and a wireless router in the connection locality module **210**.

[**0051**] Exemplary System Layouts

[**0052**] FIG. **4** shows an exemplary layout **400** of the power aggregation system **100**. The flow control center **102** can be connected to many different entities, e.g., via the Internet **104**, for communicating and receiving information. The exemplary layout **400** includes electric resources **112**, such as plug-in electric vehicles **200**, physically connected to the grid within a single control area **402**. The electric resources **112** become an energy resource for grid operators **404** to utilize.

[**0053**] The exemplary layout **400** also includes end users **406** classified into electric resource owners **408** and electrical connection location owners **410**, who may or may not be one and the same. In fact, the stakeholders in an exemplary power aggregation system **100** include the system operator at the flow control center **102**, the grid operator **404**, the resource owner **408**, and the owner of the location **410** at which the electric resource **112** is connected to the power grid **114**.

[**0054**] Electrical connection location owners **410** can include:

[**0055**] Rental car lots—rental car companies often have a large portion of their fleet parked in the lot. They can purchase fleets of electric vehicles **200** and, participating in a power aggregation system **100**, generate revenue from idle fleet vehicles.

[**0056**] Public parking lots—parking lot owners can participate in the power aggregation system **100** to generate revenue from parked electric vehicles **200**. Vehicle owners can be offered free parking, or additional incentives, in exchange for providing power services.

[**0057**] Workplace parking—employers can participate in a power aggregation system **100** to generate revenue from parked employee electric vehicles **200**. Employees can be offered incentives in exchange for providing power services.

[**0058**] Residences—a home garage can merely be equipped with a connection locality module **210** to enable the homeowner to participate in the power aggregation system **100** and generate revenue from a parked car. Also, the vehicle battery **202** and associated power electronics within the vehicle can provide local power backup power during times of peak load or power outages.

[**0059**] Residential neighborhoods—neighborhoods can participate in a power aggregation system **100** and be equipped with power-delivery devices (deployed, for example, by homeowner cooperative groups) that generate revenue from parked electric vehicles **200**.

[**0060**] The grid operations **116** of FIG. **4** collectively include interactions with energy markets **412**, the interactions of grid operators **404**, and the interactions of automated grid controllers **118** that perform automatic physical control of the power grid **114**.

[**0061**] The flow control center **102** may also be coupled with information sources **414** for input of weather reports, events, price feeds, etc. Other data sources **414** include the system stakeholders, public databases, and historical system data, which may be used to optimize system performance and to satisfy constraints on the exemplary power aggregation system **100**.

[**0062**] Thus, an exemplary power aggregation system **100** may consist of components that:

[**0063**] communicate with the electric resources **112** to gather data and actuate charging/discharging of the electric resources **112**;

[**0064**] gather real-time energy prices;

[**0065**] gather real-time resource statistics;

[**0066**] predict behavior of electric resources **112** (connectedness, location, state (such as battery State-Of-Charge) at time of connect/disconnect);

[**0067**] predict behavior of the power grid **114**/load;

[0068] encrypt communications for privacy and data security;

[0069] actuate charging of electric vehicles **200** to optimize some figure(s) of merit;

[0070] offer guidelines or guarantees about load availability for various points in the future, etc.

[0071] These components can be running on a single computing resource (computer, etc.), or on a distributed set of resources (either physically co-located or not).

[0072] Exemplary IPF systems **100** in such a layout **400** can provide many benefits: for example, lower-cost ancillary services (i.e., power services), fine-grained (both temporally and spatially) control over resource scheduling, guaranteed reliability and service levels, increased service levels via intelligent resource scheduling, firming of intermittent generation sources such as wind and solar power generation.

[0073] The exemplary power aggregation system **100** enables a grid operator **404** to control the aggregated electric resources **112** connected to the power grid **114**. An electric resource **112** can act as a power source, load, or storage, and the resource **112** may exhibit combinations of these properties. Control of an electric resource **112** is the ability to actuate power consumption, generation, or energy storage from an aggregate of these electric resources **112**.

[0074] FIG. **5** shows the role of multiple control areas **402** in the exemplary power aggregation system **100**. Each electric resource **112** can be connected to the power aggregation system **100** within a specific electrical control area. A single instance of the flow control center **102** can administer electric resources **112** from multiple distinct control areas **501** (e.g., control areas **502**, **504**, and **506**). In one implementation, this functionality is achieved by logically partitioning resources within the power aggregation system **100**. For example, when the control areas **402** include an arbitrary number of control areas, control area "A"**502**, control area "B"**504**, . . . , control area "n"**506**, then grid operations **116** can include corresponding control area operators **508**, **510**, . . . , and **512**. Further division into a control hierarchy that includes control division groupings above and below the illustrated control areas **402** allows the power aggregation system **100** to scale to power grids **114** of different magnitudes and/or to varying numbers of electric resources **112** connected with a power grid **114**.

[0075] FIG. **6** shows an exemplary layout **600** of an exemplary power aggregation system **100** that uses multiple centralized flow control centers **102** and **102'**. Each flow control center **102** and **102'** has its own respective end users **406** and **406'**. Control areas **402** to be administered by each specific instance of a flow control center **102** can be assigned dynamically. For example, a first flow control center **102** may administer control area A **502** and control area B **504**, while a second flow control center **102'** administers control area n **506**. Likewise, corresponding control area operators (**508**, **510**, and **512**) are served by the same flow control center **102** that serves their respective different control areas.

[0076] Exemplary Flow Control Server

[0077] FIG. **7** shows an exemplary server **106** of the flow control center **102**. The illustrated implementation in FIG. **7** is only one example configuration, for descriptive purposes. Many other arrangements of the illustrated components or even different components constituting an exemplary server **106** of the flow control center **102** are possible within the scope of the subject matter. Such an exemplary server **106** and flow control center **102** can be executed in hardware, software, or combinations of hardware, software, firmware, etc.

[0078] The exemplary flow control server **106** includes a connection manager **702** to communicate with electric resources **112**, a prediction engine **704** that may include a learning engine **706** and a statistics engine **708**, a constraint optimizer **710**, and a grid interaction manager **712** to receive grid control signals **714**. Grid control signals **714** are sometimes referred to as generation control signals, such as automated generation control (AGC) signals. The flow control server **106** may further include a database/information warehouse **716**, a web server **718** to present a user interface to electric resource owners **408**, grid operators **404**, and electrical connection location owners **410**; a contract manager **720** to negotiate contract terms with energy markets **412**, and an information acquisition engine **414** to track weather, relevant news events, etc., and download information from public and private databases **722** for predicting behavior of large groups of the electric resources **112**, monitoring energy prices, negotiating contracts, etc.

[0079] Operation of an Exemplary Flow Control Server

[0080] The connection manager **702** maintains a communications channel with each electric resource **112** that is connected to the power aggregation system **100**. That is, the connection manager **702** allows each electric resource **112** to log on and communicate, e.g., using Internet Protocol (IP) if the network is the Internet **104**. In other words, the electric resources **112** call home. That is, in one implementation they always initiate the connection with the server **106**. This facet enables the exemplary IPF modules **134** to work around problems with firewalls, IP addressing, reliability, etc.

[0081] For example, when an electric resource **112**, such as an electric vehicle **200** plugs in at home **124**, the IPF module **134** can connect to the home's router via the powerline connection. The router will assign the vehicle **200** an address (DHCP), and the vehicle **200** can connect to the server **106** (no holes in the firewall needed from this direction).

[0082] If the connection is terminated for any reason (including the server instance dies), then the IPF module **134** knows to call home again and connect to the next available server resource.

[0083] The grid interaction manager **712** receives and interprets signals from the interface of the automated grid controller **118** of a grid operator **404**. In one implementation, the grid interaction manager **712** also generates signals to send to automated grid controllers **118**. The scope of the signals to be sent depends on agreements or contracts between grid operators **404** and the exemplary power aggregation system **100**. In one scenario the grid interaction manager **712** sends information about the availability of aggregate electric resources **112** to receive power from the grid **114** or supply power to the grid **114**. In another variation, a contract may allow the grid interaction manager **712** to send control signals to the automated grid controller **118**—to control the grid **114**, subject to the built-in constraints of the automated grid controller **118** and subject to the scope of control allowed by the contract.

[0084] The database **716** can store all of the data relevant to the power aggregation system **100** including electric resource logs, e.g., for electric vehicles **200**, electrical connection information, per-vehicle energy metering data, resource owner preferences, account information, etc.

[0085] The web server **718** provides a user interface to the system stakeholders, as described above. Such a user interface serves primarily as a mechanism for conveying information to the users, but in some cases, the user interface serves to acquire data, such as preferences, from the users. In one implementation, the web server **718** can also initiate contact with participating electric resource owners **408** to advertise offers for exchanging electrical power.

[0086] The bidding/contract manager **720** interacts with the grid operators **404** and their associated energy markets **412** to determine system availability, pricing, service levels, etc.

[0087] The information acquisition engine **414** communicates with public and private databases **722**, as mentioned above, to gather data that is relevant to the operation of the power aggregation system **100**.

[0088] The prediction engine **704** may use data from the data warehouse **716** to make predictions about electric resource behavior, such as when electric resources **112** will connect and disconnect, global electric resource availability, electrical system load, real-time energy prices, etc. The predictions enable the power aggregation system **100** to utilize more fully the electric resources **112** connected to the power grid **114**. The learning engine **706** may track, record, and process actual electric resource behavior, e.g., by learning behavior of a sample or cross-section of a large population of electric resources **112**. The statistics engine **708** may apply various probabilistic techniques to the resource behavior to note trends and make predictions.

[0089] In one implementation, the prediction engine **704** performs predictions via collaborative filtering. The prediction engine **704** can also perform per-user predictions of one or more parameters, including, for example, connect-time, connect duration, state-of-charge at connect time, and connection location. In order to perform per-user prediction, the prediction engine **704** may draw upon information, such as historical data, connect time (day of week, week of month, month of year, holidays, etc.), state-of-charge at connect, connection location, etc. In one implementation, a time series prediction can be computed via a recurrent neural network, a dynamic Bayesian network, or other directed graphical model.

[0090] In one scenario, for one user disconnected from the grid **114**, the prediction engine **704** can predict the time of the next connection, the state-of-charge at connection time, the location of the connection (and may assign it a probability/likelihood). Once the resource **112** has connected, the time-of-connection, state-of-charge at-connection, and connection location become further inputs to refinements of the predictions of the connection duration. These predictions help to guide predictions of total system availability as well as to determine a more accurate cost function for resource allocation.

[0091] Building a parameterized prediction model for each unique user is not always scalable in time or space. Therefore, in one implementation, rather than use one model for each user in the system **100**, the prediction engine **704** builds a reduced set of models where each model in the reduced set is used to predict the behavior of many users. To decide how to group similar users for model creation and assignment, the system **100** can identify features of each user, such as number of unique connections/disconnections per day, typical connection time(s), average connection duration, average state-of-charge at connection time, etc., and can create clusters of users in either a full feature space or in some reduced feature space that is computed via a dimensionality reduction algorithm such as Principal Components Analysis, Random Projection, etc. Once the prediction engine **704** has assigned users to a cluster, the collective data from all of the users in that cluster is used to create a predictive model that will be used for the predictions of each user in the cluster. In one implementation, the cluster assignment procedure is varied to optimize the system **100** for speed (less clusters), for accuracy (more clusters), or some combination of the two.

[0092] This exemplary clustering technique has multiple benefits. First, it enables a reduced set of models, and therefore reduced model parameters, which reduces the computation time for making predictions. It also reduces the storage space of the model parameters. Second, by identifying traits (or features) of new users to the system **100**, these new users can be assigned to an existing cluster of users with similar traits, and the cluster model, built from the extensive data of the existing users, can make more accurate predictions about the new user more quickly because it is leveraging the historical performance of similar users. Of course, over time, individual users may change their behaviors and may be reassigned to new clusters that fit their behavior better.

[0093] The constraint optimizer **710** combines information from the prediction engine **704**, the data warehouse **716**, and the contract manager **720** to generate resource control signals that will satisfy the system constraints. For example, the constraint optimizer **710** can signal an electric vehicle **200** to charge its battery bank **202** at a certain charging rate and later to discharge the battery bank **202** for uploading power to the power grid **114** at a certain upload rate: the power transfer rates and the timing schedules of the power transfers optimized to fit the tracked individual connect and disconnect behavior of the particular electric vehicle **200** and also optimized to fit a daily power supply and demand "breathing cycle" of the power grid **114**.

[0094] In one implementation, the constraint optimizer **710** plays a key role in converting generation control signals **714** into vehicle control signals, mediated by the connection manager **702**. Mapping generation control signals **714** from a grid operator **404** into control signals that are sent to each unique electrical resource **112** in the system **100** is an example of a specific constraint optimization problem.

[0095] Each resource **112** has associated constraints, either hard or soft. Examples of resource constraints may include: price sensitivity of the owner, vehicle state-of-charge (e.g., if the vehicle **200** is fully charged, it cannot participate in loading the grid **114**), predicted amount of time until the resource **112** disconnects from the system **100**, owner sensitivity to revenue versus state-of-charge, electrical limits of the resource **114**, manual charging overrides by resource owners **408**, etc. The constraints on a particular resource **112**

can be used to assign a cost for activating each of the resource's particular actions. For example, a resource whose storage system **202** has little energy stored in it will have a low cost associated with the charging operation, but a very high cost for the generation operation. A fully charged resource **112** that is predicted to be available for ten hours will have a lower cost generation operation than a fully charged resource **112** that is predicted to be disconnected within the next 15 minutes, representing the negative consequence of delivering a less-than-full resource to its owner.

[**0096**] The following is one example scenario of converting one generating signal **714** that comprises a system operating level (e.g. −10 megawatts to +10 megawatts, where + represents load, − represents generation) to a vehicle control signal. It is worth noting that because the system **100** can meter the actual power flows in each resource **112**, the actual system operating level is known at all times.

[**0097**] In this example, assume the initial system operating level is 0 megawatts, no resources are active (taking or delivering power from the grid), and the negotiated aggregation service contract level for the next hour is +/−5 megawatts.

[**0098**] In this implementation, the exemplary power aggregation system **100** maintains three lists of available resources **112**. The first list contains resources **112** that can be activated for charging (load) in priority order. There is a second list of the resources **112** ordered by priority for discharging (generation). Each of the resources **112** in these lists (e.g., all resources **112** can have a position in both lists) have an associated cost. The priority order of the lists is directly related to the cost (i.e., the lists are sorted from lowest cost to highest cost). Assigning cost values to each resource **112** is important because it enables the comparison of two operations that achieve similar results with respect to system operation. For example, adding one unit of charging (load, taking power from the grid) to the system is equivalent to removing one unit of generation. To perform any operation that increases or decreases the system output, there may be multiple action choices and in one implementation the system **100** selects the lowest cost operation. The third list of resources **112** contains resources with hard constraints. For example, resources whose owner's **408** have overridden the system **100** to force charging will be placed on the third list of static resources.

[**0099**] At time "1," the grid-operator-requested operating level changes to +2 megawatts. The system activates charging the first 'n' resources from the list, where 'n' is the number of resources whose additive load is predicted to equal 2 megawatts. After the resources are activated, the result of the activations are monitored to determine the actual result of the action. If more than 2 megawatts of load is active, the system will disable charging in reverse priority order to maintain system operation within the error tolerance specified by the contract.

[**0100**] From time "1" until time "2," the requested operating level remains constant at 2 megawatts. However, the behavior of some of the electrical resources may not be static. For example, some vehicles **200** that are part of the 2 megawatts system operation may become full (state-of-charge=100%) or may disconnect from the system **100**. Other vehicles **200** may connect to the system **100** and demand immediate charging. All of these actions will cause a change in the operating level of the power aggregation system **100**. Therefore, the system **100** continuously monitors the system operating level and activates or deactivates resources **112** to maintain the operating level within the error tolerance specified by the contract.

[**0101**] At time "2," the grid-operator-requested operating level decreases to −1 megawatts. The system consults the lists of available resources and chooses the lowest cost set of resources to achieve a system operating level of −1 megawatts. Specifically, the system moves sequentially through the priority lists, comparing the cost of enabling generation versus disabling charging, and activating the lowest cost resource at each time step. Once the operating level reaches −1 megawatts, the system **100** continues to monitor the actual operating level, looking for deviations that would require the activation of an additional resource **112** to maintain the operating level within the error tolerance specified by the contract.

[**0102**] In one implementation, an exemplary costing mechanism is fed information on the real-time grid generation mix to determine the marginal consequences of charging or generation (vehicle **200** to grid **114**) on a "carbon footprint," the impact on fossil fuel resources and the environment in general. The exemplary system **100** also enables optimizing for any cost metric, or a weighted combination of several. The system **100** can optimize figures of merit that may include, for example, a combination of maximizing economic value and minimizing environmental impact, etc.

[**0103**] In one implementation, the system **100** also uses cost as a temporal variable. For example, if the system **100** schedules a discharged pack to charge during an upcoming time window, the system **100** can predict its look-ahead cost profile as it charges, allowing the system **100** to further optimize, adaptively. That is, in some circumstances the system **100** knows that it will have a high-capacity generation resource by a certain future time.

[**0104**] Multiple components of the flow control server **106** constitute a scheduling system that has multiple functions and components:

[**0105**] data collection (gathers real-time data and stores historical data);

[**0106**] projections via the prediction engine **704**, which inputs real-time data, historical data, etc.; and outputs resource availability forecasts;

[**0107**] optimizations built on resource availability forecasts, constraints, such as command signals from grid operators **404**, user preferences, weather conditions, etc. The optimizations can take the form of resource control plans that optimize a desired metric.

[**0108**] The scheduling function can enable a number of useful energy services, including:

[**0109**] ancillary services, such as rapid response services and fast regulation;

[**0110**] energy to compensate for sudden, foreseeable, or unexpected grid imbalances;

[**0111**] response to routine and unstable demands;

[0112] firming of renewable energy sources (e.g. complementing wind-generated power).

[0113] An exemplary power aggregation system **100** aggregates and controls the load presented by many charging/uploading electric vehicles **200** to provide power services (ancillary energy services) such as regulation and spinning reserves. Thus, it is possible to meet call time requirements of grid operators **404** by summing multiple electric resources **112**. For example, twelve operating loads of 5 kW each can be disabled to provide 60 kW of spinning reserves for one hour. However, if each load can be disabled for at most 30 minutes and the minimum call time is two hours, the loads can be disabled in series (three at a time) to provide 15 kW of reserves for two hours. Of course, more complex interleavings of individual electric resources by the power aggregation system **100** are possible.

[0114] For a utility (or electrical power distribution entity) to maximize distribution efficiency, the utility needs to minimize reactive power flows. Typically, there are a number of methods used to minimize reactive power flows including switching inductor or capacitor banks into the distribution system to modify the power factor in different parts of the system. To manage and control this dynamic Volt-Amperes Reactive (VAR) support effectively, it must be done in a location-aware manner. In one implementation, the power aggregation system **100** includes power-factor correction circuitry placed in electric vehicles **200** with the exemplary remote IPF module **134**, thus enabling such a service. Specifically, the electric vehicles **200** can have capacitors (or inductors) that can be dynamically connected to the grid, independent of whether the electric vehicle **200** is charging, delivering power, or doing nothing. This service can then be sold to utilities for distribution level dynamic VAR support. The power aggregation system **100** can both sense the need for VAR support in a distributed manner and use the distributed remote IPF modules **134** to take actions that provide VAR support without grid operator **404** intervention.

[0115] Exemplary Remote IPF Module

[0116] FIG. **8** shows the remote IPF module **134** of FIGS. **1** and **2** in greater detail. The illustrated remote IPF module **134** is only one example configuration, for descriptive purposes. Many other arrangements of the illustrated components or even different components constituting an exemplary remote IPF module **134** are possible within the scope of the subject matter. Such an exemplary remote IPF module **134** has some hardware components and some components that can be executed in hardware, software, or combinations of hardware, software, firmware, etc.

[0117] The illustrated example of a remote IPF module **134** is represented by an implementation suited for an electric vehicle **200**. Thus, some vehicle systems **800** are included as part of the exemplary remote IPF module **134** for the sake of description. However, in other implementations, the remote IPF module **134** may exclude some or all of the vehicles systems **800** from being counted as components of the remote IPF module **134**.

[0118] The depicted vehicle systems **800** include a vehicle computer and data interface **802**, an energy storage system, such as a battery bank **202**, and an inverter/charger **804**. Besides vehicle systems **800**, the remote IPF module **134** also includes a communicative power flow controller **806**. The communicative power flow controller **806** in turn includes some components that interface with AC power from the grid **114**, such as a powerline communicator, for example an Ethernet-over-powerline bridge **120**, and a current or current/voltage (power) sensor **808**, such as a current sensing transformer.

[0119] The communicative power flow controller **806** also includes Ethernet and information processing components, such as a processor **810** or microcontroller and an associated Ethernet media access control (MAC) address **812**; volatile random access memory **814**, nonvolatile memory **816** or data storage, an interface such as an RS-232 interface **818** or a CANbus interface **820**; an Ethernet physical layer interface **822**, which enables wiring and signaling according to Ethernet standards for the physical layer through means of network access at the MAC/Data Link Layer and a common addressing format. The Ethernet physical layer interface **822** provides electrical, mechanical, and procedural interface to the transmission medium—i.e., in one implementation, using the Ethernet-over-powerline bridge **120**. In a variation, wireless or other communication channels with the Internet **104** are used in place of the Ethernet-over-powerline bridge **120**.

[0120] The communicative power flow controller **806** also includes a bidirectional power flow meter **824** that tracks power transfer to and from each electric resource **112**, in this case the battery bank **202** of an electric vehicle **200**.

[0121] The communicative power flow controller **806** operates either within, or connected to an electric vehicle **200** or other electric resource **112** to enable the aggregation of electric resources **112** introduced above (e.g., via a wired or wireless communication interface). These above-listed components may vary among different implementations of the communicative power flow controller **806**, but implementations typically include:

[0122] an intra-vehicle communications mechanism that enables communication with other vehicle components;

[0123] a mechanism to communicate with the flow control center **102**;

[0124] a processing element;

[0125] a data storage element;

[0126] a power meter; and

[0127] optionally, a user interface.

[0128] Implementations of the communicative power flow controller **806** can enable functionality including:

[0129] executing pre-programmed or learned behaviors when the electric resource **112** is offline (not connected to Internet **104**, or service is unavailable);

[0130] storing locally-cached behavior profiles for "roaming" connectivity (what to do when charging on a foreign system or in disconnected operation, i.e., when there is no network connectivity);

[0131] allowing the user to override current system behavior; and

[0132] metering power-flow information and caching meter data during offline operation for later transaction.

[0133] Thus, the communicative power flow controller **806** includes a central processor **810**, interfaces **818** and **820** for communication within the electric vehicle **200**, a powerline communicator, such as an Ethernet-over-powerline bridge **120** for communication external to the electric vehicle **200**, and a power flow meter **824** for measuring energy flow to and from the electric vehicle **200** via a connected AC powerline **208**.

[0134] Operation of the Exemplary Remote IPF Module

[0135] Continuing with electric vehicles **200** as representative of electric resources **112**, during periods when such an electric vehicle **200** is parked and connected to the grid **114**, the remote IPF module **134** initiates a connection to the flow control server **106**, registers itself, and waits for signals from the flow control server **106** that direct the remote IPF module **134** to adjust the flow of power into or out of the electric vehicle **200**. These signals are communicated to the vehicle computer **802** via the data interface, which may be any suitable interface including the RS-232 interface **818** or the CANbus interface **820**. The vehicle computer **802**, following the signals received from the flow control server **106**, controls the inverter/charger **804** to charge the vehicle's battery bank **202** or to discharge the battery bank **202** in upload to the grid **114**.

[0136] Periodically, the remote IPF module **134** transmits information regarding energy flows to the flow control server **106**. If, when the electric vehicle **200** is connected to the grid **114**, there is no communications path to the flow control server **106** (i.e., the location is not equipped properly, or there is a network failure), the electric vehicle **200** can follow a preprogrammed or learned behavior of off-line operation, e.g., stored as a set of instructions in the nonvolatile memory **816**. In such a case, energy transactions can also be cached in nonvolatile memory **816** for later transmission to the flow control server **106**.

[0137] During periods when the electric vehicle **200** is in operation as transportation, the remote IPF module **134** listens passively, logging select vehicle operation data for later analysis and consumption. The remote IPF module **134** can transmit this data to the flow control server **106** when a communications channel becomes available.

[0138] Exemplary Power Flow Meter

[0139] Power is the rate of energy consumption per interval of time. Power indicates the quantity of energy transferred during a certain period of time, thus the units of power are quantities of energy per unit of time. The exemplary power flow meter **824** measures power for a given electric resource **112** across a bidirectional flow—e.g., power from grid **114** to electric vehicle **200** or from electric vehicle **200** to the grid **114**. In one implementation, the remote IPF module **134** can locally cache readings from the power flow meter **824** to ensure accurate transactions with the central flow control server **106**, even if the connection to the server is down temporarily, or if the server itself is unavailable.

[0140] The exemplary power flow meter **824**, in conjunction with the other components of the remote IPF module **134** enables system-wide features in the exemplary power aggregation system **100** that include:

[0141] tracking energy usage on an electric resource-specific basis;

[0142] power-quality monitoring (checking if voltage, frequency, etc. deviate from their nominal operating points, and if so, notifying grid operators, and potentially modifying resource power flows to help correct the problem);

[0143] vehicle-specific billing and transactions for energy usage;

[0144] mobile billing (support for accurate billing when the electric resource owner **408** is not the electrical connection location owner **410** (i.e., not the meter account owner). Data from the power flow meter **824** can be captured at the electric vehicle **200** for billing;

[0145] integration with a smart meter at the charging location (bidirectional information exchange); and

[0146] tamper resistance (e.g., when the power flow meter **824** is protected within an electric resource **112** such as an electric vehicle **200**).

[0147] Mobile Resource Locator

[0148] The exemplary power aggregation system **100** also includes various techniques for determining the electrical network location of a mobile electric resource **112**, such as a plug-in electric vehicle **200**. Electric vehicles **200** can connect to the grid **114** in numerous locations and accurate control and transaction of energy exchange can be enabled by specific knowledge of the charging location.

[0149] Some of the exemplary techniques for determining electric vehicle charging locations include:

[0150] querying a unique identifier for the location (via wired, wireless, etc.), which can be:

[0151] the unique ID of the network hardware at the charging site;

[0152] the unique ID of the locally installed smart meter, by communicating with the meter;

[0153] a unique ID installed specifically for this purpose at a site; and

[0154] using GPS or other signal sources (cell, WiMAX, etc.) to establish a "soft" (estimated geographic) location, which is then refined based on user preferences and historical data (e.g., vehicles tend to be plugged-in at the owner's residence **124**, not a neighbor's residence).

[0155] FIG. **9** shows an exemplary technique for resolving the physical location on the grid **114** of an electric resource **112** that is connected to the exemplary power aggregation system **100**. In one implementation, the remote IPF module **134** obtains the Media Access Control (MAC) address **902** of the locally installed network modem or router (Internet access point) **302**. The remote IPF module **134** then transmits this unique MAC identifier to the flow control server **106**, which uses the identifier to resolve the location of the electric vehicle **200**.

[0156] To discern its physical location, the remote IPF module **134** can also sometimes use the MAC addresses or other unique identifiers of other physically installed nearby equipment that can communicate with the remote IPF mod-

ule **134**, including a "smart" utility meter **904**, a cable TV box **906**, an RFID-based unit **908**, or an exemplary ID unit **910** that is able to communicate with the remote IPF module **134**. The ID unit **910** is described in more detail in FIG. **10**. MAC addresses **902** do not always give information about the physical location of the associated piece of hardware, but in one implementation the flow control server **106** includes a tracking database **912** that relates MAC addresses or other identifiers with an associated physical location of the hardware. In this manner, a remote IPF module **134** and the flow control server **106** can find a mobile electric resource **112** wherever it connects to the power grid **114**.

[**0157**] FIG. **10** shows another exemplary technique for determining a physical location of a mobile electric resource **112** on the power grid **114**. An exemplary ID unit **910** can be plugged into the grid **114** at or near a charging location. The operation of the ID unit **910** is as follows. A newly-connected electric resource **112** searches for locally connected resources by broadcasting a ping or message in the wireless reception area. In one implementation, the ID unit **910** responds **1002** to the ping and conveys a unique identifier **1004** of the ID unit **910** back to the electric resource **112**. The remote IPF module **134** of the electric resource **112** then transmits the unique identifier **1004** to the flow control server **106**, which determines the location of the ID unit **910** and by proxy, the exact or the approximate network location of the electric resource **112**, depending on the size of the catchment area of the ID unit **910**.

[**0158**] In another implementation, the newly-connected electric resource **112** searches for locally connected resources by broadcasting a ping or message that includes the unique identifier **1006** of the electric resource **112**. In this implementation, the ID unit **910** does not need to trust or reuse the wireless connection, and does not respond back to the remote IPF module **134** of the mobile electric resource **112**, but responds **1008** directly to the flow control server **106** with a message that contains its own unique identifier **1004** and the unique identifier **1006** of the electric resource **112** that was received in the ping message. The central flow control server **106** then associates the unique identifier **1006** of the mobile electric resource **112** with a "connected" status and uses the other unique identifier **1004** of the ID unit **910** to determine or approximate the physical location of the electric resource **112**. The physical location does not have to be approximate, if a particular ID unit **910** is associated with only one exact network location. The remote IPF module **134** learns that the ping is successful when it hears back from the flow control center **106** with confirmation.

[**0159**] Such an exemplary ID unit **910** is particularly useful in situations in which the communications path between the electric resource **112** and the flow control server **106** is via a wireless connection that does not itself enable exact determination of network location.

[**0160**] FIG. **11** shows another exemplary method **1100** and system **1102** for determining the location of a mobile electric resource **112** on the power grid **114**. In a scenario in which the electric resource **112** and the flow control server **106** conduct communications via a wireless signaling scheme, it is still desirable to determine the physical connection location during periods of connectedness with the grid **114**.

[**0161**] Wireless networks (e.g., GSM, 802.11, WiMax) comprise many cells or towers that each transmit unique identifiers. Additionally, the strength of the connection between a tower and mobile clients connecting to the tower is a function of the client's proximity to the tower. When an electric vehicle **200** is connected to the grid **114**, the remote IPF module **134** can acquire the unique identifiers of the available towers and relate these to the signal strength of each connection, as shown in database **1104**. The remote IPF module **134** of the electric resource **112** transmits this information to the flow control server **106**, where the information is combined with survey data, such as database **1106** so that a position inference engine **1108** can triangulate or otherwise infer the physical location of the connected electric vehicle **200**. In another enablement, the IPF module **134** can use the signal strength readings to resolve the resource location directly, in which case the IPF module **134** transmits the location information instead of the signal strength information.

[**0162**] Thus, the exemplary method **1100** includes acquiring (**1110**) the signal strength information; communicating (**1112**) the acquired signal strength information to the flow control server **106**; and inferring (**1114**) the physical location using stored tower location information and the acquired signals from the electric resource **112**.

[**0163**] FIG. **12** shows a method **1200** and system **1202** for using signals from a global positioning satellite (GPS) system to determine a physical location of a mobile electric resource **112** on the power grid **114**. Using GPS enables a remote IPF module **134** to resolve its physical location on the power network in a non-exact manner. This noisy location information from GPS is transmitted to the flow control server **106**, which uses it with a survey information database **1204** to infer the location of the electric resource **112**.

[**0164**] The exemplary method **1200** includes acquiring (**1206**) the noisy position data; communicating (**1208**) the acquired noisy position data to the flow control server **106**; and inferring (**1210**) the location using the stored survey information and the acquired data.

[**0165**] Exemplary Transaction Methods and Business Methods

[**0166**] The exemplary power aggregation system **100** supports the following functions and interactions:

[**0167**] 1. Setup—The power aggregation system **100** creates contracts outside the system and/or bids into open markets to procure contracts for power services contracts via the web server **718** and contract manager **720**. The system **100** then resolves these requests into specific power requirements upon dispatch from the grid operator **404**, and communicates these requirements to vehicle owners **408** by one of several communication techniques.

[**0168**] 2. Delivery—The grid interaction manager **712** accepts real-time grid control signals **714** from grid operators **404** through a power-delivery device, and responds to these signals **714** by delivering power services from connected electric vehicles **200** to the grid **114**.

[**0169**] 3. Reporting—After a power delivery event is complete, a transaction manager can report power services transactions stored in the database **716**. A billing manager resolves these requests into specific credit or debit billing transactions. These transactions may be communicated to a

grid operator's or utility's billing system for account reconciliation. The transactions may also be used to make payments directly to resource owners **408**.

[**0170**] In one implementation, the vehicle-resident remote IPF module **134** may include a communications manager to receive offers to provide power services, display them to the user and allow the user to respond to offers. Sometimes this type of advertising or contracting interaction can be carried out by the electric resource owner **408** conventionally connecting with the web server **718** of the flow control server **106**.

[**0171**] In an exemplary business model of managing vehicle-based load or storage, the exemplary power aggregation system **100** serves as an intermediary between vehicle owners **408** (individuals, fleets, etc.) and grid operators **404** (Independent System Operators (ISOs), Regional Tranmission Operators (RTOs), utilities, etc.).

[**0172**] The load and storage electric resource **112** presented by a single plug-in electric vehicle **200** is not a substantial enough resource for an ISO or utility to consider controlling directly. However, by aggregating many electric vehicles **200** together, managing their load behavior, and exporting a simple control interface, the power aggregation system **100** provides services that are valuable to grid operators **404**.

[**0173**] Likewise, vehicle owners **408** may not be interested in participating without participation being made easy, and without there being incentive to do so. By creating value through aggregated management, the power aggregation system **100** can provide incentives to owners in the form of payments, reduced charging costs, etc. The power aggregation system **100** can also make the control of vehicle charging and uploading power to the grid **114** automatic and nearly seamless to the vehicle owner **408**, thereby making participation palatable.

[**0174**] By placing remote IPF modules **134** in electric vehicles **200** that can measure attributes of power quality, the power aggregation system **100** enables a massively distributed sensor network for the power distribution grid **114**. Attributes of power quality that the power aggregation system **100** can measure include frequency, voltage, power factor, harmonics, etc. Then, leveraging the communication infrastructure of the power aggregation system **100**, including remote IPF modules **134**, this sensed data can be reported in real time to the flow control server **106**, where information is aggregated. Also, the information can be presented to the utility, or the power aggregation system **100** can directly correct undesirable grid conditions by controlling vehicle charge/power upload behavior of numerous electric vehicles **200**, changing the load power factor, etc.

[**0175**] The exemplary power aggregation system **100** can also provide Uninteruptible Power Supply (UPS) or backup power for a home/business, including interconnecting islanding circuitry. In one implementation, the power aggregation system **100** allows electric resources **112** to flow power out of their batteries to the home (or business) to power some or all of the home's loads. Certain loads may be configured as key loads to keep "on" during a grid power-loss event. In such a scenario, it is important to manage islanding of the residence **124** from the grid **114**. Such a system may include anti-islanding circuitry that has the ability to communicate with the electric vehicle **200**, described further below as a smart breaker box. The ability of the remote IPF module **134** to communicate allows the electric vehicle **200** to know if providing power is safe, "safe" being defined as "safe for utility line workers as a result of the main breaker of the home being in a disconnected state." If grid power drops, the smart breaker box disconnects from the grid and then contacts any electric vehicles **200** or other electric resources **112** participating locally, and requests them to start providing power. When grid power returns, the smart breaker box turns off the local power sources, and then reconnects.

[**0176**] For mobile billing (for when the vehicle owner **408** is different than the meter account owner **410**), there are two important aspects for the billing manager to reckon with during electric vehicle recharging: who owns the vehicle, and who owns the meter account of the facility where recharge is happening. When the vehicle owner **408** is different than the meter account owner **410**, there are several options:

[**0177**] 1. The meter owner **410** may give free charging.

[**0178**] 2. The vehicle owner **408** may pay at the time of charging (via credit card, account, etc.)

[**0179**] 3. A pre-established account may be settled automatically.

[**0180**] Without oversight of the power aggregation system **100**, theft of services may occur. With automatic account settling, the power aggregation system **100** records when electric vehicles **200** charge at locations that require payment, via vehicle IDs and location IDs, and via exemplary metering of time-annotated energy flow in/out of the vehicle. In these cases, the vehicle owner **408** is billed for energy used, and that energy is not charged to the facility's meter account owner **410** (so double-billing is avoided). A billing manager that performs automatic account settling can be integrated with the power utility, or can be implemented as a separate debit/credit system.

[**0181**] An electrical charging station, whether free or for pay, can be installed with a user interface that presents useful information to the user. Specifically, by collecting information about the grid **114**, the vehicle state, and the preferences of the user, the station can present information such as the current electricity price, the estimated recharge cost, the estimated time until recharge, the estimated payment for uploading power to the grid **114** (either total or per hour), etc. The information acquisition engine **414** communicates with the electric vehicle **20** and with public and/or private data networks **722** to acquire the data used in calculating this information.

[**0182**] The exemplary power aggregation system **100** also offers other features for the benefit of electric resource owners **408** (such as vehicle owners):

[**0183**] vehicle owners can earn free electricity for vehicle charging in return for participating in the system;

[**0184**] vehicle owners can experience reduced charging cost by avoiding peak time rates;

[**0185**] vehicle owners can receive payments based on the actual energy service their vehicle provides;

[0186] vehicle owners can receive a preferential tariff for participating in the system.

[0187] There are also features between the exemplary power aggregation system **100** and grid operators **404**:

[0188] the power aggregation system **100** as electric resource aggregator can earn a management fee (which may be some function of services provided), paid by the grid operator **404**.

[0189] the power aggregation system **100** as electric resource aggregator can sell into power markets **412**;

[0190] grid operators **404** may pay for the power aggregation system **100**, but operate the power aggregation system **100** themselves.

[0191] Exemplary Safety and Remote Smart-Islanding

[0192] The exemplary power aggregation system **100** can include methods and components for implementing safety standards and safely actuating energy discharge operations. For example, the exemplary power aggregation system **100** may use in-vehicle line sensors as well as smart-islanding equipment installed at particular locations. Thus, the power aggregation system **100** enables safe vehicle-to-grid operations. Additionally, the power aggregation system **100** enables automatic coordination of resources for backup power scenarios.

[0193] In one implementation, an electric vehicle **200** containing a remote IPF module **134** stops vehicle-to-grid upload of power if the remote IPF module **134** senses no line power originating from the grid **114**. This halting of power upload prevents electrifying a cord that may be unplugged, or electrifying a powerline **206** that is being repaired, etc. However, this does not preclude using the electric vehicle **200** to provide backup power if grid power is down because the safety measures described below ensure that an island condition is not created.

[0194] Additional smart-islanding equipment installed at a charging location can communicate with the remote IPF module **134** of an electric vehicle **200** to coordinate activation of power upload to the grid **114** if grid power drops. One particular implementation of this technology is a vehicle-to-home backup power capability.

[0195] FIG. **13** shows exemplary safety measures in a vehicle-to-home scenario, in which an electric resource **112** is used to provide power to a load or set of loads (as in a home). A breaker box **1300** is connected to the utility electric meter **1302**. When an electric resource **112** is flowing power into the grid (or local loads), an islanding condition should be avoided for safety reasons. The electric resource **112** should not energize a line that would conventionally be considered de-energized in a power outage by line workers.

[0196] A locally installed smart grid disconnect (switch) **1304** senses the utility line in order to detect a power outage condition and coordinates with the electric resource **112** to enable vehicle-to-home power transfer. In the case of a power outage, the smart grid disconnect **1304** disconnects the circuit breakers **1306** from the utility grid **114** and communicates with the electric resource **112** to begin power backup services. When the utility services return to operation, the smart grid disconnect **1304** communicates with the electric resource **112** to disable the backup services and reconnect the breakers to the utility grid **114**.

[0197] FIG. **14** shows exemplary safety measures when multiple electric resources **112** power a home. In this case, the smart grid disconnect **1304** coordinates with all connected electric resources **112**. One electric resource **112** is deemed the "master"**1400** for purposes of generating a reference signal **1402** and the other resources are deemed "slaves"**1404** and follow the reference of the master **1400**. In a case in which the master **1400** disappears from the network, the smart grid disconnect **1304** assigns another slave **1404** to be the reference/master **1400**.

[0198] FIG. **15** shows the smart grid disconnect **1304** of FIGS. **13** and **14**, in greater detail. In one implementation, the smart grid disconnect **1304** includes a processor **1502**, a communicator **1504** coupled with connected electric resources **112**, a voltages sensor **1506** capable of sensing both the internal and utility-side AC lines, a battery **1508** for operation during power outage conditions, and a battery charger **1510** for maintaining the charge level of the battery **1508**. A controlled breaker or relay **1512** switches between grid power and electric resource-provided power when signaled by the processor **1502**.

[0199] Exemplary User Experience Options

[0200] The exemplary power aggregation system **100** can enable a number of desirable user features:

[0201] data collection can include distance driven and both electrical and non-electrical fuel usage, to allow derivation and analysis of overall vehicle efficiency (in terms of energy, expense, environmental impact, etc.). This data is exported to the flow control server **106** for storage **716**, as well as for display on an in-vehicle user interface, charging station user interface, and web/cell phone user interface.

[0202] intelligent charging learns the vehicle behavior and adapts the charging timing automatically. The vehicle owner **408** can override and request immediate charging if desired.

[0203] Exemplary Methods

[0204] FIG. **16** shows an exemplary method **1600** of power aggregation. In the flow diagram, the operations are summarized in individual blocks. The exemplary method **1600** may be performed by hardware, software, or combinations of hardware, software, firmware, etc., for example, by components of the exemplary power aggregation system **100**.

[0205] At block **1602**, communication is established with each of multiple electric resources connected to a power grid. For example, a central flow control service can manage numerous intermittent connections with mobile electric vehicles, each of which may connect to the power grid at various locations. An in-vehicle remote agent connects each vehicle to the Internet when the vehicle connects to the power grid.

[0206] At block **1604**, the electric resources are individually signaled to provide power to or take power from the power grid.

[0207] FIG. **17** is a flow diagram of an exemplary method of communicatively controlling an electric resource for

power aggregation. In the flow diagram, the operations are summarized in individual blocks. The exemplary method **1700** may be performed by hardware, software, or combinations of hardware, software, firmware, etc., for example, by components of the exemplary intelligent power flow (IPF) module **134**.

[**0208**] At block **1702**, communication is established between an electric resource and a service for aggregating power.

[**0209**] At block **1704**, information associated with the electric resource is communicated to the service.

[**0210**] At block **1706**, a control signal based in part upon the information is received from the service.

[**0211**] At block **1708**, the resource is controlled, e.g., to provide power to the power grid or to take power from the grid, i.e., for storage.

[**0212**] At block **1710**, bidirectional power flow of the electric device is measured, and used as part of the information associated with the electric resource that is communicated to the service at block **1704**.

[**0213**] FIG. **18** is a flow diagram of an exemplary method of metering bidirectional power of an electric resource. In the flow diagram, the operations are summarized in individual blocks. The exemplary method **1800** may be performed by hardware, software, or combinations of hardware, software, firmware, etc., for example, by components of the exemplary power flow meter **824**.

[**0214**] At block **1802**, energy transfer between an electric resource and a power grid is measured bidirectionally.

[**0215**] At block **1804**, the measurements are sent to a service that aggregates power based in part on the measurements.

[**0216**] FIG. **19** is a flow diagram of an exemplary method of determining an electric network location of an electric resource. In the flow diagram, the operations are summarized in individual blocks. The exemplary method **1900** may be performed by hardware, software, or combinations of hardware, software, firmware, etc., for example, by components of the exemplary power aggregation system **100**.

[**0217**] At block **1902**, physical location information is determined. The physical location information may be derived from such sources as GPS signals or from the relative strength of cell tower signals as an indicator of their location. Or, the physical location information may derived by receiving a unique identifier associated with a nearby device, and finding the location associated with that unique identifier.

[**0218**] At block **1904**, an electric network location, e.g., of an electric resource or its connection with the power grid, is determined from the physical location information.

[**0219**] FIG. **20** is a flow diagram of an exemplary method of scheduling power aggregation. In the flow diagram, the operations are summarized in individual blocks. The exemplary method **2000** may be performed by hardware, software, or combinations of hardware, software, firmware, etc., for example, by components of the exemplary flow control server **106**.

[**0220**] At block **2002**, constraints associated with individual electric resources are input.

[**0221**] At block **2004**, power aggregation is scheduled, based on the input constraints.

[**0222**] FIG. **21** is a flow diagram of an exemplary method of smart islanding. In the flow diagram, the operations are summarized in individual blocks. The exemplary method **2100** may be performed by hardware, software, or combinations of hardware, software, firmware, etc., for example, by components of the exemplary power aggregation system **100**.

[**0223**] At block **2102**, a power outage is sensed.

[**0224**] At block **2104**, a local connectivity—a network isolated from the power grid—is created.

[**0225**] At block **2106**, local energy storage resources are signaled to power the local connectivity.

[**0226**] FIG. **22** is a flow diagram of an exemplary method of extending a user interface for power aggregation. In the flow diagram, the operations are summarized in individual blocks. The exemplary method **2200** may be performed by hardware, software, or combinations of hardware, software, firmware, etc., for example, by components of the exemplary power aggregation system **100**.

[**0227**] At block **2202**, a user interface is associated with an electric resource. The user interface may displayed in, on, or near an electric resource, such as an electric vehicle that includes an energy storage system, or the user interface may be displayed on a device associated with the owner of the electric resource, such as a cell phone or portable computer.

[**0228**] At block **2204**, power aggregation preferences and constraints are input via the user interface. In other words, a user may control a degree of participation of the electric resource in a power aggregation scenario via the user interface. Or, the user may control the characteristics of such participation.

[**0229**] FIG. **23** is a flow diagram of an exemplary method of gaining and maintaining electric vehicle owners in a power aggregation system. In the flow diagram, the operations are summarized in individual blocks. The exemplary method **2300** may be performed by hardware, software, or combinations of hardware, software, firmware, etc., for example, by components of the exemplary power aggregation system **100**.

[**0230**] At block **2302**, electric vehicle owners are enlisted into a power aggregation system for distributed electric resources.

[**0231**] At block **2304**, an incentive is provided to each owner for participation in the power aggregation system.

[**0232**] At block **2306**, recurring continued service to the power aggregation system is repeatedly compensated.

CONCLUSION

[**0233**] Although exemplary systems and methods have been described in language specific to structural features and/or methodological acts, it is to be understood that the subject matter defined in the appended claims is not necessarily limited to the specific features or acts described.

Rather, the specific features and acts are disclosed as exemplary forms of implementing the claimed methods, devices, systems, etc.

1. A method, comprising:

inputting constraints of individual electric resources into a power aggregation system, wherein the power aggregation system signals the electric resources to provide power to or take power from the power grid; and

scheduling power aggregation based on the constraints.

2. The method as recited in claim 1, wherein the electric resources include electric storage systems of electric vehicles.

3. The method as recited in claim 1, wherein the constraints include a constraint selected from the group consisting of: price sensitivity of an owner of an electric resource, a vehicle state-of-charge, a predicted amount of time until the electric resource disconnects from a power grid, a sensitivity of an owner of an electric resource to revenue versus state-of-charge of the electric resource, electrical limits of the electric resource, and manual charging overrides by an owner of an electric resource.

4. The method as recited in claim 3, further comprising scheduling power flows for each of the electric resources based on an optimization of at least some of the constraints of the electric resources.

5. The method as recited in claim 4, further comprising scheduling power flows for each of the electric resources based at least in part on an optimization of at least some constraints on the power aggregation system.

6. The method as recited in claim 1, wherein the constraints on an electric resource are used to assign a cost for activating each available action of the electric resource, wherein the actions include providing power to the power grid, taking power from the power grid, and storing energy from the power grid.

7. The method as recited in claim 1, further comprising classifying the electric resources on lists, the lists including:

a first dynamically prioritized list of electric resources that can be activated for storing power from the power grid and providing a load for the power grid; and

a second dynamically prioritized list of electric resources that can be activated for discharging and providing power to the power grid.

8. The method as recited in claim 7, further comprising assigning a cost to each resource on the first list and the second list, wherein the priority order of the lists is directly related to the costs.

9. The method as recited in claim 8, further comprising comparing two operations that achieve similar results in the power aggregation system by comparing costs on the two lists.

10. The method as recited in claim 9, further comprising selecting a lowest cost operation when there are multiple action choices.

11. The method as recited in claim 9, wherein the power aggregation system selects a cost that maximizes an economic value while minimizing an environmental impact.

12. The method as recited in claim 9, wherein the power aggregation system uses the cost as a temporal variable, wherein the power aggregation system predicts a look-ahead cost profile for an action as the action occurs, allowing the power aggregation system to further optimize, adaptively.

13. The method as recited in claim 7, further comprising a third, static list of electric resources with hard constraints, including a constraint of overriding the power aggregation system to force charging the electric resource, wherein an electric resource on the third list takes priority over electric resources on the first and second lists in relation to the degree of hardness of the constraint of the electric resource on the third list.

14. The method as recited in claim 8, wherein assigning a cost includes determining a cost function, the cost function guided by predicting a total system availability.

15. The method as recited in claim 14, further comprising building a set of models, wherein each model is used to predict a behavior of multiple electric resources.

16. The method as recited in claim 15, further comprising grouping similar electric resources for creating the models and for assigning the electric resources to each model.

17. The method as recited in claim 16, wherein the assigning includes identifying features of each electric resource, including at least one of a number of unique connections/disconnections per day, typical connection times, average connection duration, and an average state-of-charge at connection time.

18. The method as recited in claim 15, wherein building a model further includes creating clusters of electric resources or corresponding users in a full feature space or in a reduced feature space, the feature space computed via a dimensionality reduction algorithm, including Principal Components Analysis or Random Projection.

19. The method as recited in claim 18, wherein once the electric resources or the users have been assigned to a cluster, collective data from all of the electric resources or users in that cluster are used to create the predictive model to be used for predicting a behavior of each electric resource or user in the cluster.

20. The method as recited in claim 19, further comprising using less clusters to increase speed of the power aggregation system or using more clusters to increase an accuracy of the power aggregation system.

* * * * *