US 20070173805A1

(19) United States

(12) Patent Application Publication

(10) Pub. No.: US 2007/0173805 A1

(43) Pub. Date: Jul. 26, 2007

Weinberg et al.

(54) METHOD AND SYSTEM FOR CONTROLLING AN OUTPUT OF A RADIO-FREQUENCY MEDICAL GENERATOR HAVING AN IMPEDANCE BASED CONTROL ALGORITHM

(76) Inventors: **Craig Weinberg**, Denver, CO (US); **Kari Leidich**, Golden, CO (US)

Correspondence Address:
UNITED STATES SURGICAL,
A DIVISION OF TYCO HEALTHCARE GROUP LP
195 MCDERMOTT ROAD
NORTH HAVEN, CT 06473

(21) Appl. No.: **11/657,173**

(22) Filed: **Jan. 24, 2007**

Related U.S. Application Data

(60) Provisional application No. 60/761,498, filed on Jan. 24, 2006.

Publication Classification

(51) Int. Cl.
A61B 18/18 (2006.01)

(52) U.S. Cl. **606/34**; 606/38

(57) **ABSTRACT**

A system for performing an electrosurgical procedure at a surgical site is disclosed. The system includes a sensor configured to continually sense an electrical and/or a physical property of tissue at a surgical site and to generate a sensor signal as a function thereof. The system also includes a control module configured to process the sensor signal using a processor, an algorithm, and a map having one or more predetermined values. The control module is further configured to compare the sensor signal to a predetermined level to determine reliability of the sensor signal and to signal an electrosurgical generator in response to a reliable sensor signal such that the electrosurgical generator enters energy control mode, wherein the electrosurgical generator matches an output of the control signal with a predetermined value from the map.

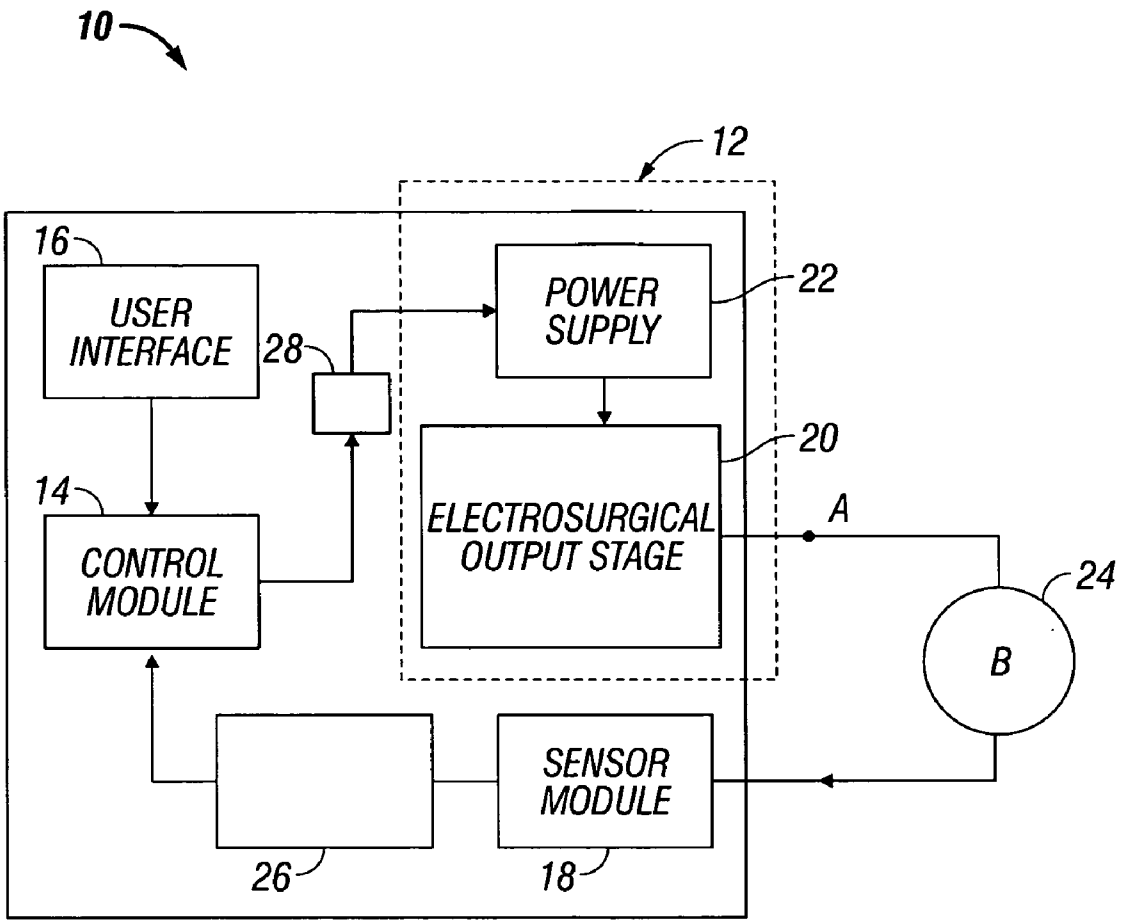

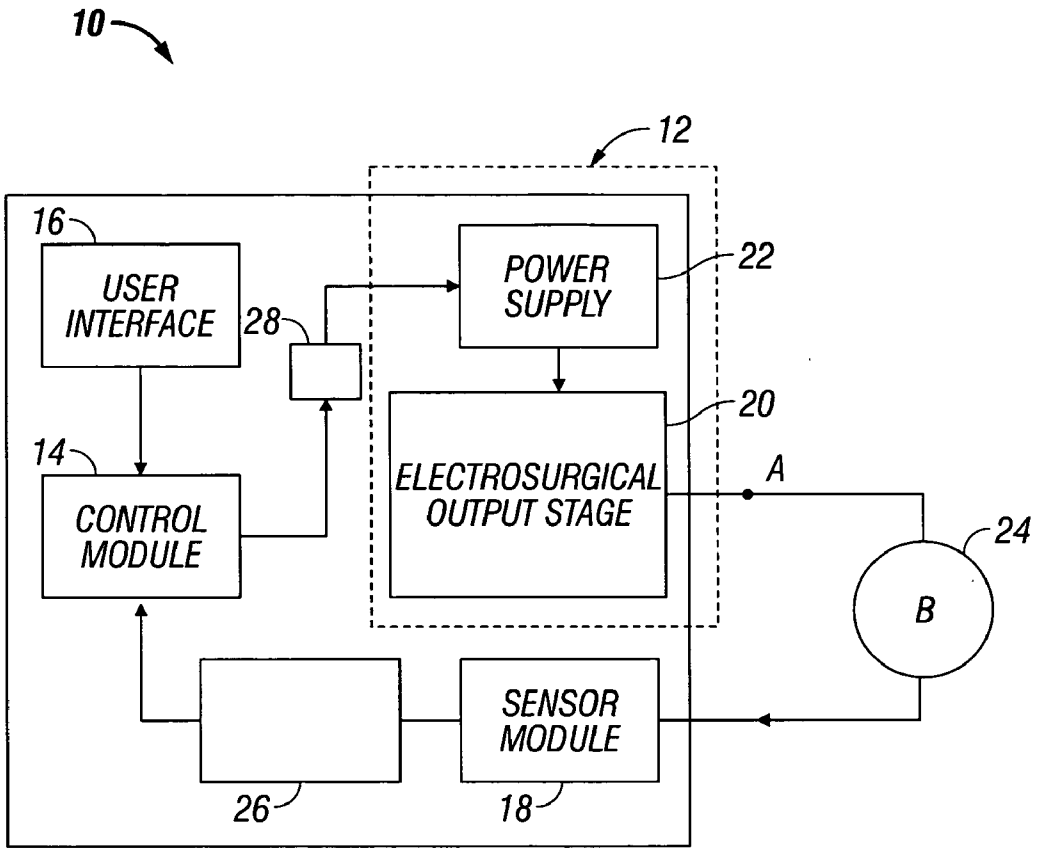
10
12
16
USER INTERFACE
28
POWER SUPPLY
22
20
14
CONTROL MODULE
ELECTROSURGICAL OUTPUT STAGE
A
24
B
SENSOR MODULE
26
18

FIG. 1

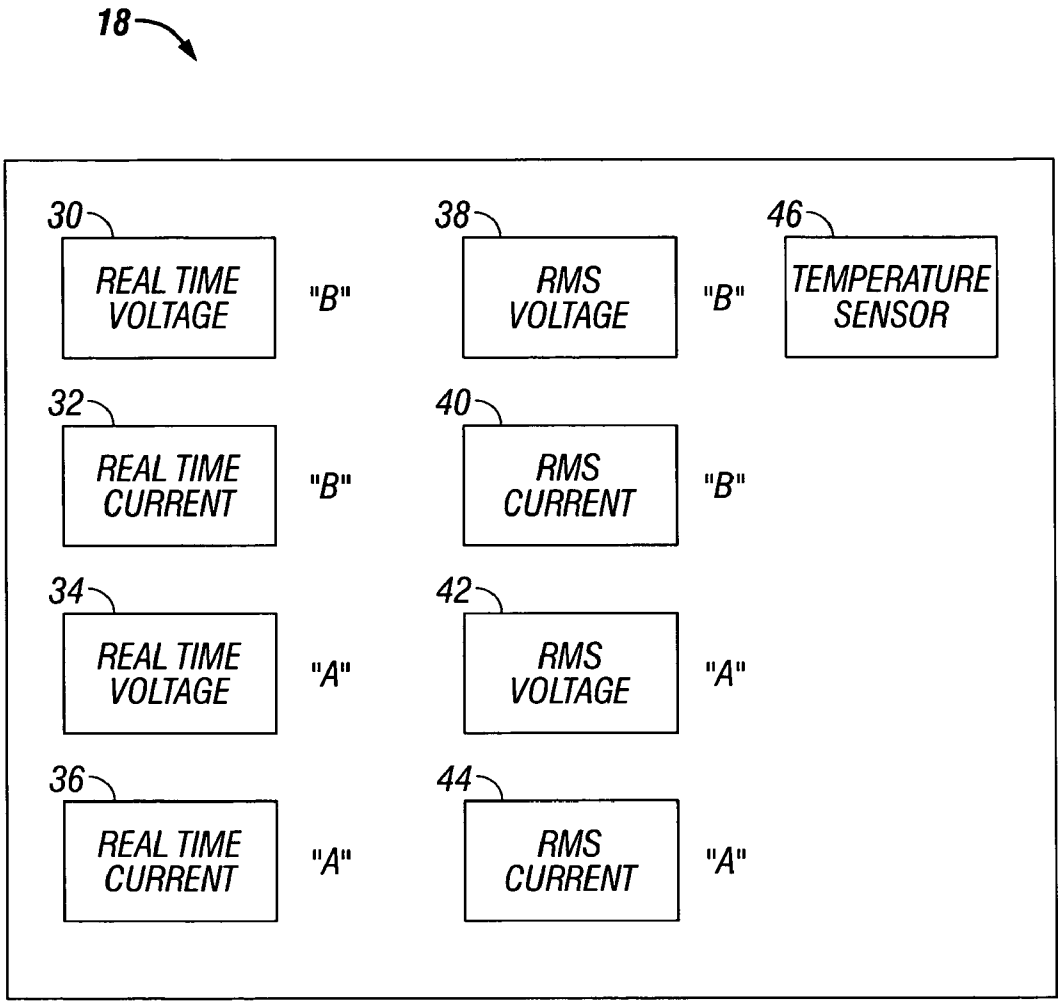
18
30
REAL TIME VOLTAGE
"B"
38
RMS VOLTAGE
"B"
46
TEMPERATURE SENSOR
32
REAL TIME CURRENT
"B"
40
RMS CURRENT
"B"
34
REAL TIME VOLTAGE
"A"
42
RMS VOLTAGE
"A"
36
REAL TIME CURRENT
"A"
44
RMS CURRENT
"A"

FIG. 2

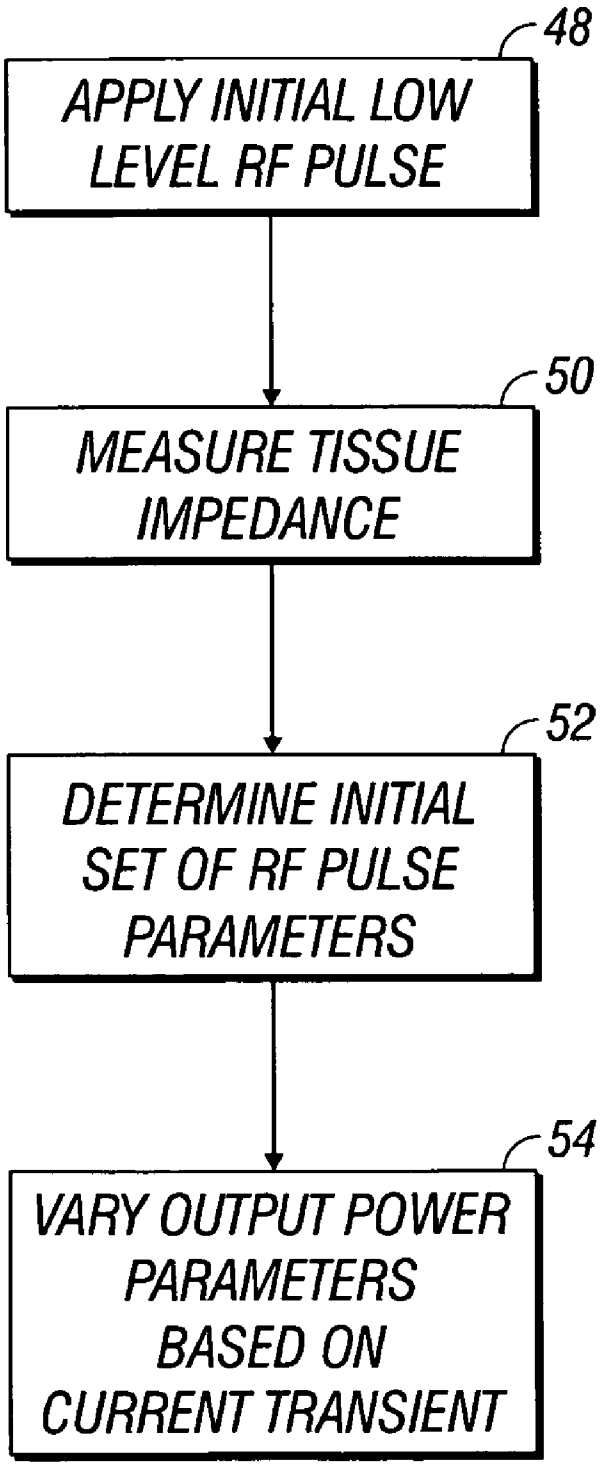
48
APPLY INITIAL LOW LEVEL RF PULSE
50
MEASURE TISSUE IMPEDANCE
52
DETERMINE INITIAL SET OF RF PULSE PARAMETERS
54
VARY OUTPUT POWER PARAMETERS BASED ON CURRENT TRANSIENT

FIG. 3

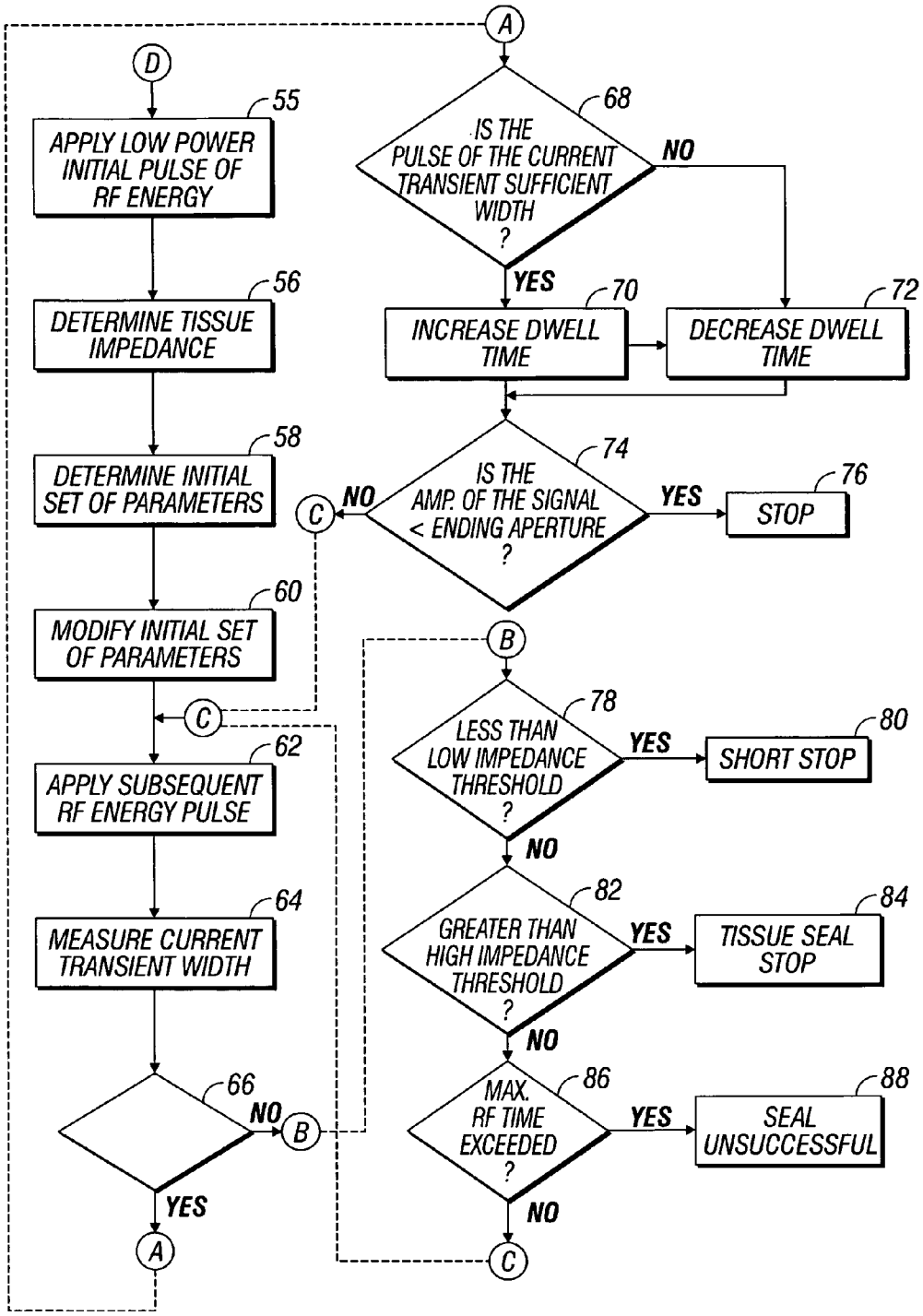
A
D
55
APPLY LOW POWER INITIAL PULSE OF RF ENERGY
56
DETERMINE TISSUE IMPEDANCE
58
DETERMINE INITIAL SET OF PARAMETERS
60
MODIFY INITIAL SET OF PARAMETERS
C
62
APPLY SUBSEQUENT RF ENERGY PULSE
64
MEASURE CURRENT TRANSIENT WIDTH
66
NO
B
YES
A
68
IS THE PULSE OF THE CURRENT TRANSIENT SUFFICIENT WIDTH ?
NO
YES
70
INCREASE DWELL TIME
72
DECREASE DWELL TIME
74
IS THE AMP. OF THE SIGNAL < ENDING APERTURE ?
NO
C
YES
76
STOP
B
78
LESS THAN LOW IMPEDANCE THRESHOLD ?
YES
80
SHORT STOP
NO
82
GREATER THAN HIGH IMPEDANCE THRESHOLD ?
YES
84
TISSUE SEAL STOP
NO
86
MAX. RF TIME EXCEEDED ?
YES
88
SEAL UNSUCCESSFUL
NO
C

FIG. 4

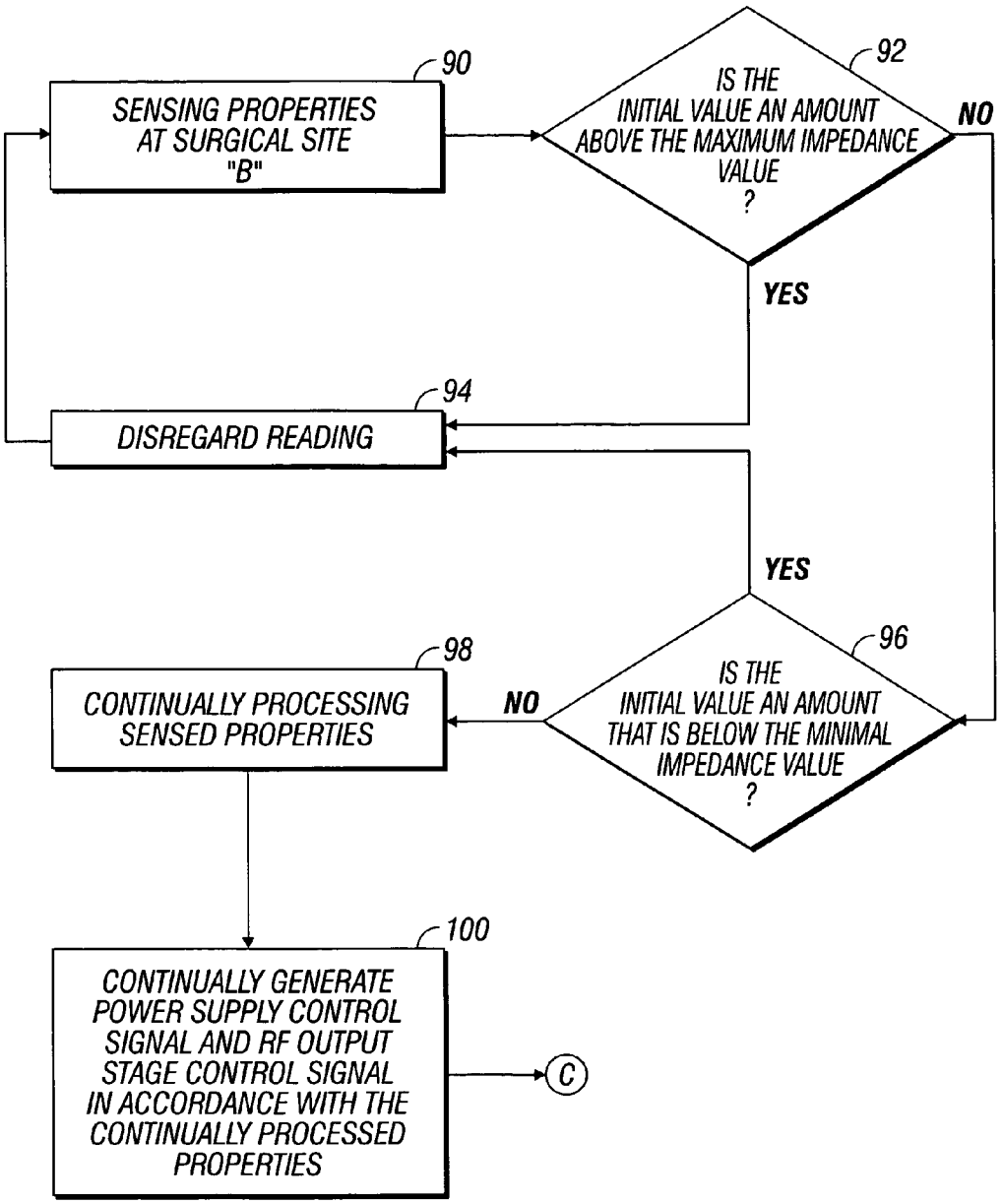
90
SENSING PROPERTIES AT SURGICAL SITE "B"
92
IS THE INITIAL VALUE AN AMOUNT ABOVE THE MAXIMUM IMPEDANCE VALUE ?
NO
YES
94
DISREGARD READING
YES
96
IS THE INITIAL VALUE AN AMOUNT THAT IS BELOW THE MINIMAL IMPEDANCE VALUE ?
NO
98
CONTINUALLY PROCESSING SENSED PROPERTIES
100
CONTINUALLY GENERATE POWER SUPPLY CONTROL SIGNAL AND RF OUTPUT STAGE CONTROL SIGNAL IN ACCORDANCE WITH THE CONTINUALLY PROCESSED PROPERTIES
C

FIG. 5

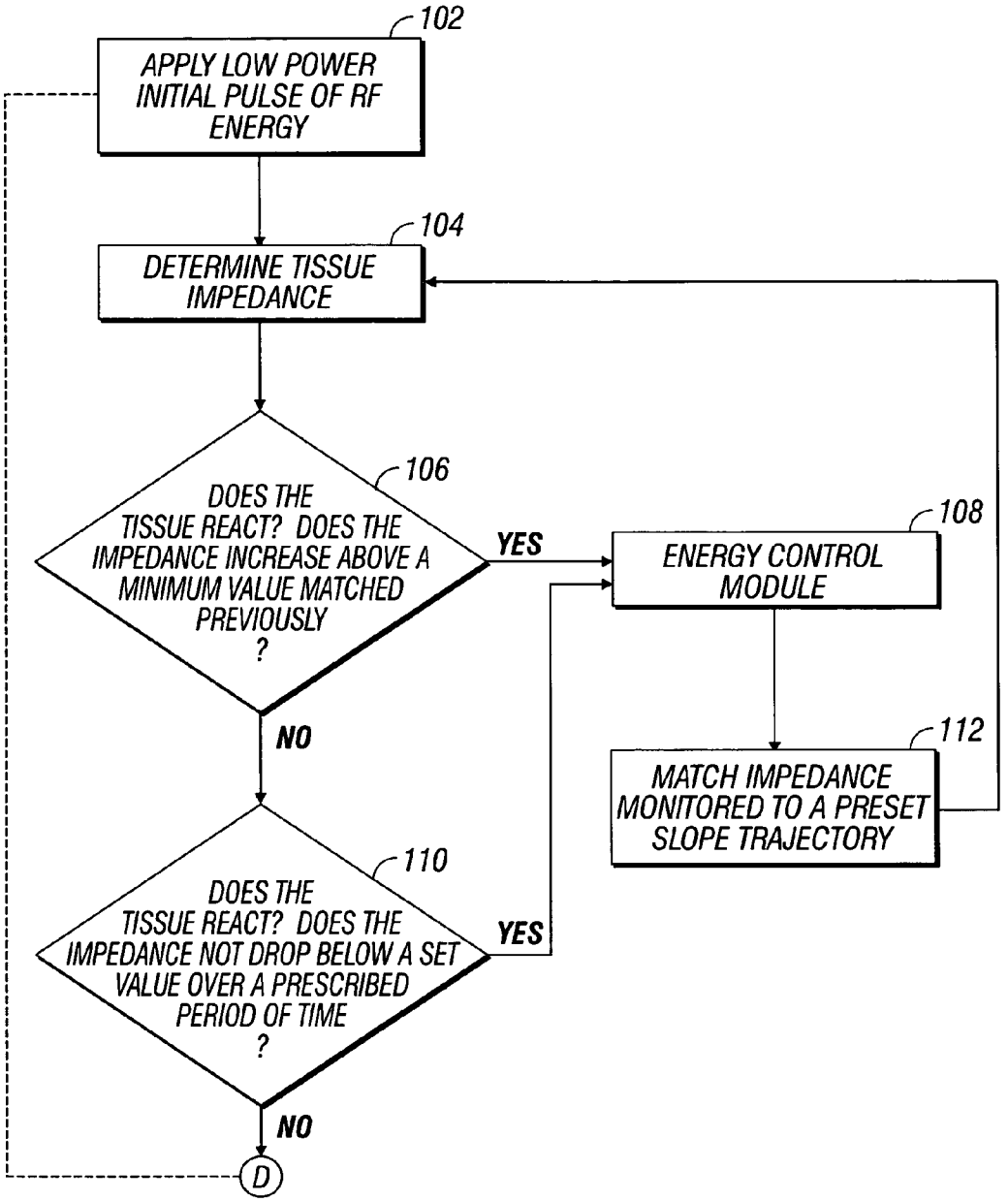
102
APPLY LOW POWER INITIAL PULSE OF RF ENERGY
104
DETERMINE TISSUE IMPEDANCE
106
DOES THE TISSUE REACT? DOES THE IMPEDANCE INCREASE ABOVE A MINIMUM VALUE MATCHED PREVIOUSLY ?
YES
108
ENERGY CONTROL MODULE
NO
112
MATCH IMPEDANCE MONITORED TO A PRESET SLOPE TRAJECTORY
110
DOES THE TISSUE REACT? DOES THE IMPEDANCE NOT DROP BELOW A SET VALUE OVER A PRESCRIBED PERIOD OF TIME ?
YES
NO
D

FIG. 6

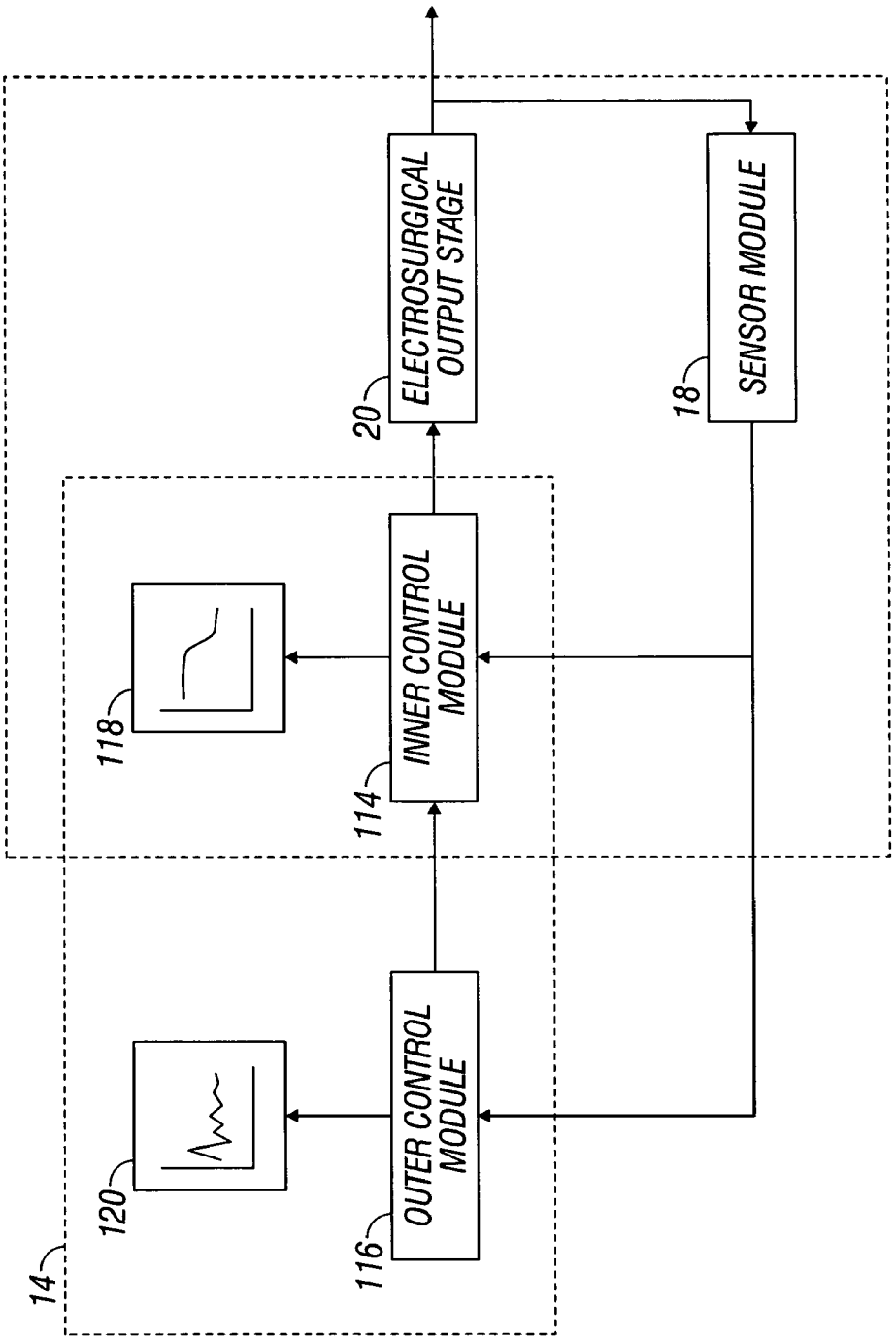
ELECTROSURGICAL OUTPUT STAGE
20
SENSOR MODULE
18
INNER CONTROL MODULE
114
118
OUTER CONTROL MODULE
116
120
14

FIG. 7

METHOD AND SYSTEM FOR CONTROLLING AN OUTPUT OF A RADIO-FREQUENCY MEDICAL GENERATOR HAVING AN IMPEDANCE BASED CONTROL ALGORITHM

PRIORITY CLAIM

[0001] This application claims priority to a U.S. Provisional Application Ser. No. 60/761,498 entitled "A Method and System For Controlling An Output of a Radio-Frequency Medical Generator Having an Impedance Based Control Algorithm" filed by Craig Weinberg et al. on Jan. 24, 2006. The entire contents of which is incorporated by reference in its entirety herein.

BACKGROUND

[0002] The present disclosure is directed to electrosurgery and, in particular, to a control system for an electrosurgical generator. The control system has a control algorithm that continually adjusts for changes in initial tissue conditions to enhance tissue fusion.

Technical Field

[0003] Electrosurgical generators are employed by surgeons in conjunction with an electrosurgical instrument to cut, coagulate, desiccate and/or seal patient tissue. High frequency electrical energy, e.g., radio frequency (RF) energy, is produced by the electrosurgical generator and applied to the tissue by an electrosurgical tool. Both monopolar and bipolar configurations are commonly used during electrosurgical procedures.

[0004] Electrosurgical techniques and instruments can be used to coagulate small diameter blood vessels or to seal large diameter vessels or tissue, e.g., veins and/or soft tissue structures, such as lung, brain and intestine. A surgeon can cauterize, coagulate/desiccate and/or simply reduce or slow bleeding, by controlling the intensity, frequency and duration of the electrosurgical energy applied between the electrodes and through the tissue. For the purposes herein, the term "cauterization" is defined as the use of heat to destroy tissue (also called "diathermy" or "electro-diathermy"). The term "coagulation" is defined as a process of desiccating tissue wherein the tissue cells are ruptured and dried.

[0005] "Vessel sealing" or "tissue fusion" is defined as the process of liquefying the collagen and elastin in the tissue so that it reforms into a fused mass with significantly-reduced demarcation between the opposing tissue structures (opposing walls of the lumen). Coagulation of small vessels is usually sufficient to permanently close them while larger vessels or tissue need to be sealed to assure permanent closure. It has been known that different waveforms of electrosurgical energy are suited for different surgical affects, e.g., cutting, coagulation, sealing, blend, etc. For example, the "cutting" mode typically entails generating an uninterrupted sinusoidal waveform in the frequency range of 100 kHz to 4 MHz with a crest factor in the range of 1.4 to 2.0. The "blend" mode typically entails generating an uninterrupted cut waveform with a duty cycle in the range of 25% to 75% and a crest factor in the range of 2.0 to 5.0. The "coagulate" mode typically entails generating an uninterrupted waveform with a duty cycle of approximately 10% or less and a crest factor in the range of 5.0 to 12.0. In order to effectively and consistently seal vessels or tissue, a pulse-like waveform is desired.

[0006] In order to optimize sealing or tissue fusion without causing unwanted charring of tissue at the surgical site or possibly causing collateral damage to adjacent tissue, e.g., thermal spread, it is necessary to control the output from the electrosurgical generator, e.g., power, waveform, voltage, current, pulse rate, etc.

[0007] It is known that measuring the electrical impedance and change thereof across the tissue at the surgical site provides a good indication of the state of desiccation or drying of the tissue during the tissue fusion or vessel sealing process. It has been observed that as the tissue dries or loses moisture, the impedance across the tissue rises. This observation has been utilized in some electrosurgical generators to regulate the electrosurgical power based on a measurement of tissue impedance. For example, commonly owned U.S. Pat. No. 6,210,403 relates to a system and method for automatically measuring the tissue impedance and altering the output of the electrosurgical generator. The alteration is based on the measured impedance across the tissue. The content of this patent is hereby incorporated by reference in its entirety.

[0008] The supply of energy may also be controlled such that it is supplied in a continuous fashion to seal vessels tissue wherein the input/output is responsive to tissue hydration/volume through feedback control. Delivery of the electrosurgical energy in pulses allows the tissue to cool between pulses. The pulses also allow some moisture to return to the tissue between pulses which is known to enhance the sealing process.

[0009] It is further known to clamp or clip excess voltage output from the electrosurgical generator by the use of avalanche devices, such as diodes, zener diodes and other devices, resulting in absorption and dissipation of excess energy in the form of heat.

[0010] Commonly owned U.S. Pat. No. 6,398,779 discloses a sensor which measures the initial tissue impedance with a calibrating pulse which, in turn, sets various electrical parameters based on a look-up table stored in a computer database. The transient pulse width associated with each pulse measured during activation is used to set the duty cycle and amplitude of the next pulse. Generation of electrosurgical power is automatically terminated based on a predetermined value of the tissue impedance across the tissue.

[0011] One significant aspect of such prior art electrosurgical generators is that often such generators use software which provides for an initial reading of one or more parameters of the tissue. However, such an initial tissue reading may be a so called "false" reading depending on the initial positioning or disposition of the electrode. The false reading may be input into the control algorithm of the electrosurgical generator which compensates for the false reading. It would be advantageous to provide a control for an electrosurgical generator which both disregards such initial, not reliable, readings where the tissue does not react and distinguishes a "false" reading from a "true" reliable reading.

[0012] Thus, a need exists to develop an electrosurgical generator which includes improved control circuitry for processing an impedance of the tissue over time and for providing continuous control of various electrical parameters (e.g., pulse frequency and intensity, voltage, current, power) of the electrosurgical generator based upon continu-

ally sensed information from the surgical site. In addition, a need exists to develop control circuitry which is designed to disregard initial readings sensed from the surgical site where no reaction with the tissue occurs.

SUMMARY

[0013] It is an object of the present disclosure to provide a system having a control module and a sensor that determines and continually monitors whether a tissue reacts to an electrode by sensing and recording a change in impedance over time.

[0014] It is an object of the present disclosure to provide for a system having a control module and a sensor that determines whether a tissue reacts to an electrode by sensing a change in the impedance per unit time and, in response to a determination that the tissue has reacted, the control module enters into an energy control mode.

[0015] It is another object of the present disclosure to provide for a system having a control module and a sensor that monitors a parameter and in response to the parameter provides a predetermined amount of current per unit time in order to prevent a rapid and uneven vaporization of liquid and fluid in the tissue with the predetermined amount of current per unit time being complementary to the monitored parameter.

[0016] It is still another object of the present disclosure to provide for a system that has a control module with a sensor that monitors a change in an impedance per unit time to determine a stability of a tissue reaction with an electrode.

[0017] It is yet another object of the present disclosure to provide for a system having a control module and a sensor that monitors a parameter and stores the parameter in a memory over time and in response to the stored parameter provides a predetermined amount of current per unit time to prevent a rapid and uneven vaporization of liquid and fluid in the tissue with the predetermined amount of current per unit time being complementary to a measurement from the stored parameter.

[0018] According to a first aspect of the present disclosure, a system for performing an electrosurgical procedure at a surgical site is disclosed. The system includes a sensor configured to continually sense an electrical and/or a physical property of tissue at a surgical site and to generate a sensor signal as a function thereof. The system also includes a control module configured to process the sensor signal using a processor, an algorithm, and a map having one or more predetermined values. The control module is further configured to compare the sensor signal to a predetermined level to determine reliability of the sensor signal and to signal an electrosurgical generator in response to a reliable sensor signal such that the electrosurgical generator enters energy control mode, wherein the electrosurgical generator matches an output of the control signal with a predetermined value from the map.

[0019] A method for performing an electrosurgical procedure at a surgical site is also contemplated by the present disclosure. The method includes the steps of continually sensing electrical and physical properties of the surgical site and generating a sensor signal as a function thereof and processing the sensor signal using a processor, an algorithm, and a map having one or more values to verify a reactance of tissue at the surgical site. The method also includes the step of entering an energy control mode, wherein the electrosurgical generator matches an output of the control signal with a value from the map, based on the determination of the reactance of tissue in the processing step.

[0020] According to another aspect of the present disclosure, a system for performing an electrosurgical procedure at a surgical site is disclosed. The system includes a sensor configured to continually sense an electrical and/or physical property of the surgical site and to generate a sensor signal as a function thereof. The system also includes a control module configured to process the sensor signal using a processor, an algorithm, and a map having one or more values. The control module is further configured to verify tissue reactance and to signal an electrosurgical generator based on the verification of tissue reactance such that the electrosurgical generator enters energy control mode. The electrosurgical generator matches an output of the control signal with a value from the map, wherein the control module is configured to recalculate the map when tissue impedance increases above a predetermined threshold and to signal the electrosurgical generator to renter energy control mode.

BRIEF DESCRIPTION OF THE DRAWINGS

[0021] Various embodiments will be described herein below with reference to the drawings wherein:

[0022] FIG. **1** is a schematic diagram of a control system for use with an electrosurgical generator according to the present disclosure;

[0023] FIG. **2** is a schematic diagram of a sensor module for use with the control system of FIG. **1**;

[0024] FIG. **3** is a flowchart illustrating a method of operation of the control system according to one aspect of the present disclosure;

[0025] FIG. **4** is another flowchart illustrating a method of operation of the control system according to the present disclosure;

[0026] FIG. **5** is another flowchart illustrating an initial method of operation of the control system according to another aspect of the present disclosure;

[0027] FIG. **6** is a flowchart illustrating a method of operation of the control system with an energy control mode according to another aspect of the present disclosure; and

[0028] FIG. **7** is a diagram of a control system in accordance with yet another aspect of embodiment of the disclosure.

DETAILED DESCRIPTION

[0029] Reference should be made to the drawings where like reference numerals refer to similar elements throughout the various figures.

[0030] Referring to FIG. **1**, there is shown a schematic diagram of one embodiment of the presently disclosed closed loop control system **10** for use with an electrosurgical generator **12**. Control system **10** includes a control module **14**, user interface **16** and sensor module **18**. The control module **14** is operatively connected to the electrosurgical generator **12**.

[0031] The control module **14** includes program instructions to detect a specified increase in a parameter at an initial time of operation to determine whether a reaction of the tissue has occurred. If no tissue reaction occurs, the control module **14** compensates and prevents initial data from entering a control algorithm. This initial data is considered to be unreliable. The parameter may be any parameter

capable of being measured by the sensor module **18** of operation or calculated from data provided by the sensor module by the control module **14**. In one embodiment, the parameter is a change in tissue impedance over time.

[0032] If a tissue reaction occurs and is detected, this data is considered to be reliable and the control module **14** enters an energy control mode. The energy control mode regulates electrosurgical generator **12** to output RF energy that matches a monitored tissue impedance parameter with a preset slope trajectory. The preset slope trajectory may be derived from a number of stored parameters or alternatively may be derived from a desired output or a desired effect. The preset slope trajectory is from a stored value in a map or memory and is intended to output RF energy to produce an optimal tissue seal. The stored values may be obtained by accessing a stored mapping of continuous values or alternatively a table or equivalent.

[0033] The electrosurgical generator **12** includes electrosurgical energy output stage **20** and a power supply **22**. The electrosurgical output stage **20** receives power from the power supply **22** and delivers RF energy to a patient **24** via at least one electrode (not explicitly shown). As can be appreciated, one or more electrodes may be used with the electrosurgical instrument for performing monopolar or bipolar surgery.

[0034] The sensor module **18** senses various electrical and physical parameters or properties at the operating site and communicates with the control module **14**. In response, the control module **14** regulates the electrosurgical output from the output stage **20**. The sensor module **18** may be configured to measure or "sense" one or more various electrical or electromechanical conditions at the operating site, including but not limited to, tissue impedance, changes in tissue impedance, tissue temperature, changes in tissue temperature, leakage current, applied voltage and applied current, and other parameters.

[0035] The sensor module **18** is configured to measure one or more of these conditions continuously or in "real time". The sensor module **18** measures the conditions such that the control module **14** can continually modulate the electrosurgical output according to a specific purpose or desired surgical intent. More particularly, analog signals provided by the sensor module **18** are converted to digital signals via an analog-to-digital converter (ADC) **26**. The digital signals are then provided to the control module **14**.

[0036] The control module **14**, thereafter, regulates the power supply **22** and/or the electrosurgical output stage **20** according to the information obtained from the sensor module **18**.

[0037] The user interface **16** is electrically connected to the control module **14** to allow the user to control various parameters of the electrosurgical energy output to the patient **24** during surgery to manually set, regulate and/or control one or more electrical parameters of the delivered RF energy. Such parameters may include but are not limited to voltage, current, power, frequency, amplified, and/or pulse parameters such as a pulse width, a duty cycle, a crest factor, and/or a repetition rate depending upon a particular purpose or to change surgical intent.

[0038] The control module **14** includes at least one microprocessor capable of executing software instructions for processing data received by the user interface **16** and the sensor module **18**. The control module **14** outputs control signals to the electrosurgical output stage **20** and/or the power supply **22**, accordingly. The software instructions (executable by the control module) are stored in an internal memory in the control module **14**, an internal or external memory bank accessible by the control module and/or an external memory, e.g., an external hard drive, floppy diskette, CD-ROM, etc. or any other recordable medium. Control signals from the control module **14** to the electrosurgical generator **12** may be converted to analog signals by a digital-to-analog converter **28**.

[0039] The power supply **22** is a high voltage DC power supply for producing electrosurgical current, e.g., radiofrequency (RF) current. Signals received from the control module **14** control the magnitude of the voltage and current output by the DC power supply. The electrosurgical output stage **20** receives the output current from the DC power supply and generates one or more pulses or a continuous sinusoidal waveform via a waveform generator (not explicitly shown).

[0040] The pulse parameters, such as pulse width, duty cycle, crest factor and repetition rate are regulated in response to the signals received from the control module **14**. Alternatively, the power supply **22** may be an AC power supply, and the electrosurgical output stage **20** may vary the waveform of the signal received from power supply **22** to achieve a desired waveform.

[0041] The user interface **16** may be local to, adjacent to, or remote from the control module **14**. A user may enter data such as the type of electrosurgical instrument being used, the type of electrosurgical procedure to be performed, and/or the tissue type upon which the electrosurgical procedure is being performed. The generator **12** may also be configured to recognize one or more parameters automatically, e.g., based on the type of the electrosurgical instrument being used.

[0042] The closed loop control system **10**, in particular the sensor module **18**, may include one or more smart sensors. The sensors provide feedback to the surgeon relating to one or more of these physical parameters. Furthermore, the user may enter commands, such as a target effective voltage, current or power level to be maintained, or a target response, e.g., change in regulation of the power supply **22** and/or electrosurgical output stage **20**, to changes in sensed values, such as an effective change in voltage, current and/or power level as a function of the changes. The user may also enter commands for controlling electrical parameters of the RF energy, delivered by the electrosurgical generator **12**, as described above. A default value is provided for the above target levels and target responses.

[0043] The sensor module **18** includes a number of sensors (not explicitly shown) strategically located for sensing various properties or conditions at or proximate points "A" and **37** B" as shown in FIG. **1**. Sensors positioned at or proximate point "A" (hereinafter referred to as at point "A") sense one or more properties and/or parameters of electrosurgical output from electrosurgical output stage **20**, and/or properties, parameters or conditions prior to surgical effect of the currently administered electrosurgical energy during the surgical procedure. Sensors positioned at point "A" may be provided with or attached proximate the generator **12**.

[0044] Sensors (not explicitly shown) positioned at or proximate point "B" (hereinafter referred to as at point "B") sense one or more parameters, properties and/or conditions at or across the operating site prior to the surgical procedure and/or in response to surgical effect during the surgical

procedure and these sensors may be included with the electrosurgical instrument (e.g., on one end or opposing end effectors) or attached proximate the operating site. In one embodiment, optical sensors, proximity sensors, temperature sensors may be used to detect certain tissue characteristics, and electrical sensors may be employed to sense other parameters of the tissue or operating effects. Point "A" may be proximate the surgical site "B" at a location where the signals outputted by the generator **12** are propagated before they are applied or approximately when they are applied to the surgical site "B".

[0045] The sensors are provided with leads or possibly a suitable wireless device for transmitting information to the control module **14**. The information may be provided directly to the control module and/or provided to the control module via the sensor module **18** and/or the analog to digital converter **26**. The sensor module **18** may also have a device for receiving information from multiple sensors. The sensor module **18** may provide the information and the source of the information (e.g., the particular sensor providing the information) to the control module **14**.

[0046] Referring now to FIG. **2**, there is shown a block diagram of the sensor module **18**. The sensor module **18** has a real-time voltage sensing system **30** and a real-time current sensing system **32** for sensing real-time values for applied voltage and current at the surgical site "B". The sensor module **18** also has a real-time voltage sensing system **34** and a real-time current sensing system **36** for sensing real-time values of signals returned from the patient at a point "A".

[0047] The sensor module **18** further has an RMS voltage sensing system **38** and an RMS current sensing system **40** are also included for sensing and deriving RMS values for applied voltage and current at the surgical site "B". An RMS voltage sensing system **42** and an RMS current sensing system **44** are included for sensing and deriving RMS values of signals at point "A". The sensor module **18** also has a temperature sensing system **46**. The temperature sensing system **46** is included for sensing tissue temperature at the surgical site "B".

[0048] Real-time and RMS current and voltage sensing systems are known in the art. The sensor module **110** may further include other sensors (not explicitly shown) for sensing voltage and current output by the generator.

[0049] The measured or sensed values are further processed, either by circuitry and/or a processor (not explicitly shown) in the sensor module **18** and/or by the control module **14**, for deriving changes in sensed values and tissue impedance at the surgical site "B".

[0050] Tissue impedance and changes in tissue impedance may be determined in one embodiment by measuring the voltage and/or current across the tissue and/or calculating changes thereof over time, and comparing the voltage and current values to known and/or desired values associated with various tissue types for use by the control system **10** to drive electrical output to achieve desired impedance and/or change in impedance values.

[0051] As can be appreciated, these known and/or desired values, tissue types and ranges may be stored in an internal look-up table, "a continuous value map" or in an external searchable memory. Commonly owned U.S. Pat. No. 6,398,779, U.S. Pat. No. 6,203,541, U.S. Pat. No. 5,827,271 and U.S. patent application Ser. No. 10,073,761 disclose methods for measuring tissue impedance, and are all incorporated by reference herein in their entirety.

[0052] By deriving tissue impedance (or other physical and electrical parameters) from real-time value(s) provides the benefit of monitoring real-time tissue impedance and/or changes in tissue impedance. As the surgical procedure proceeds, it is believed that the tissue impedance fluctuates in response to removal and restoration of liquids from the tissue at the surgical site "B". As the control module **14** monitors the tissue impedance and changes in tissue impedance (or other physical and electrical parameters) the control module regulates the power supply **22** and electrosurgical output stage **20** accordingly for achieving the desired and optimal electrosurgical effect. Such a system is described in United States Published Patent Application Number US 2004/0015163 A1 to Buysse, et al. which is herein incorporated by reference in its entirety.

[0053] Before beginning an electrosurgical procedure, an operator of the electrosurgical instrument enters information via the user interface **16**. Information entered includes, for example, the type of electrosurgical instrument being used, the type of procedure being performed (i.e., desired surgical effect), the type of tissue, relevant patient information, and a control mode setting. The control mode setting determines the amount of or type of control that the control module **14** will provide. The one or more sensors (not explicitly shown) may also be included to automatically provide information to the control module **14** relating to tissue type, initial tissue thickness, initial tissue impedance, etc.

[0054] The modes include, but are not limited to, one or a combination of one or more of the following modes: a first mode, a second mode, a third mode or any number of modes. The first mode is defined as the stage when the control module **14** maintains a steady selected output power, current and/or voltage value at site "A".

[0055] The second mode is defined as the stage when the control module **14** maintains a steady selected output power, current and/or voltage value at site "B". The third mode is defined as the stage when the control module **14** maintains a variable selected output power, current and/or voltage values at site "A" which is dependent upon (i.e., a function of) time value(s) and/or sensed parameter(s) or changes in sensed parameter(s) during the procedure. The fourth mode is defined as the stage when the control module **14** maintains a variable selected output power, current and/or voltage values at site "B", which is dependent upon (i.e., a function of) time value(s) and/or sensed parameter(s) or changes in sensed parameter(s) during the procedure.

[0056] Functions performed on the time value(s) and sensed properties(s) include operations such as calculations and/or look-up operations using a table or map stored by or accessible by the control module **14**. The control module **14** processes the selected output power, current and voltage values, such as by performing calculations or table look up operations from a database, to determine power control signal values and output control values.

[0057] The control module **14** determines an initial setting for control signals to the power supply **22** and the output stage **20** by using and/or processing operator-entered data or settings, performing calculations and/or accessing a look-up table stored by or accessible by the control module **14**.

[0058] Once the electrosurgical procedure begins, the sensors **30** through **46** of sensor module **18** sense various physical and electrical properties and provide feedback to

the control module **14** through the converter **26**. The control module **14** processes the feedback information in accordance with the pre selected mode, as well as any additional operator-entered commands entered during the procedure. The control module **14** then sends control information to the power supply **22** and the output stage **20**. The electrosurgical generator **12** may be provided with override controls, to allow the operator to override the control signals provided by the control module **14**, if needed, e.g., by entering override commands via the user interface **16** or at any other suitable location.

[0059] The electrical impedance and change thereof across the tissue at the surgical site indicated on FIG. **1** as reference letter "B" provides a favorable indication of the state of desiccation or drying of the tissue. As the tissue dries or looses moisture, the impedance across the tissue rises. This observation has been used in some electrosurgical generators to regulate the electrosurgical power based on a measurement of tissue impedance. For example, commonly owned U.S. Pat. No. 6,210,403 which is herein incorporated by reference relates to a system and method for automatically measuring the tissue impedance and altering the output of the electrosurgical generator based on the measured impedance across the tissue.

[0060] As the impedance of the tissue changes the current changes inversely proportionally if the voltage remains constant. This is basically defined by Ohm's law wherein, V=IR wherein V is the voltage, I is the current, and I is the current along the electrode in milliamps. When the tissue impedance increases, the current will decrease. If the tissue impedance decreases, the current will increase. Increases/decreases in the current may be detector by the sensor module **18**.

[0061] Referring now to FIG. **3**, there is shown a general basic block diagram of a software algorithm that is executed by the control module **14**. The control module **14** controls one of or both of the power supply **22** and/or the electrosurgical output stage **20** and at step **48**, the control module **14** controls the power supply and/or the electrosurgical output stage to emit a low power initial pulse of RF energy. The pulse is used to sense at least one electrical characteristic of the tissue.

[0062] Next, the sensor module **18** communicates the data to the converter **26** and the converter communicates a digital signal to the control module **14**. The control module **14** measures tissue impedance or another electrical characteristic shown as step **50**. Thereafter, the control module **14** uses the sensed electrical characteristic of the tissue as an input into the determination of the initial radio frequency parameters shown as step **52**. At step **54**, the control module **14** may vary the output power parameters based in part on the current transient or in this instance using the impedance, as described in commonly-owned U.S. Pat. No. 6,398,779, the contents of which are hereby incorporated by reference in its entirety.

[0063] Referring now also to the logic flow diagram of FIG. **4**, the impedance sensing feature is implemented at the beginning of a cycle, for example, a vessel seal cycle or another surgical cycle. One skilled in the art should appreciate that the cycle may be any electrosurgical surgical operation known in the art. The electrosurgical generator **10** senses at least one electrical characteristic of the tissue, for example, impedance, I-V phase rotation, or the output current, by using a short burst of RF energy shown as step **55**. The electrical characteristic of the tissue such as the tissue impedance may be measured at any frequency or power level, but is performed at the same frequency as the intended working frequency (e.g., 470 kHz). A short burst of RF energy from the electrosurgical output stage **20** (less than about 200 milliseconds, and about 100 milliseconds) is a 470 kHz sine wave with approximately 5 W of power. However, one skilled in the art should appreciate that other configurations are also possible.

[0064] The initial pulse RF power is made low at step **55**, and the pulse time is made as short as possible, to enable an initial tissue electrical characteristic measurement to be made such as the tissue impedance without excessively heating the tissue at step **56**. Next, the control module **14** using the tissue impedance or another electrical characteristic determines the initial set of output power parameters shown as step **58**. Some of the values that are obtained include power, maximum voltage, starting voltage, minimum voltage, voltage decay, voltage ramp, maximum RF on time, maximum cool scale factor, pulse minimum, pulse dwell time, pulse off time, and the pulse desired width.

[0065] The control module **14** then modifies the initial set of parameters per seal intensity control input shown as step **60** and applies a subsequent RF energy pulse shown as step **62** and a measure of the current transient pulse width is made at step **64**.

[0066] A determination is made at step **66** by the control module **14**. The determination is whether there is a current transient is present or whether there is a short lived oscillation between the first pulse and a successive pulse caused by one or more parameters such as the tissue impedance, change in voltage or current load. If there is a current transient present, the control is passed to step **68** as indicated by the broken line in FIG. **4**. If there is not a current transient present, the control is passed to step **78** as shown by the broken line in FIG. **4**.

[0067] At step **68**, a determination is made as to whether the pulse of the current transient is sufficiently wide. If the pulse is sufficiently wide or in the range of 500 to 1000 ms, then the control module **14** assumes a presence of a large amount of tissue, or that the selected tissue requires more RF energy to desiccate. If sufficiently wide, the control passes to step **70**. If not sufficiently wide, the control passes to step **72**.

[0068] At step **70**, the dwell time is increased and a reduction of amplitude is made of the next RF pulse. If the pulse of the current transient is not sufficiently wide or is narrow, for example about 250 ms or less, then the control module **14** can assume a small amount of tissue, or a tissue type that requires little RF energy is present. The dwell time may be shortened and a reduction in the amplitude of the delay time of the next RF pulse can be made at step **72**.

[0069] A decision is made at step **74** as to whether the amplitude of the signal is less than the ending amplitude. If the determination at step **74** is affirmative then the control module **14** stops the signal being emitted from the electrosurgical output stage **20** at step **76**. The signal is terminated because the operation is complete and the tissue has been sealed.

[0070] If the decision at step **74** is at the negative, control passes to step **62** and the subsequent RF energy pulse is applied. If the electrical transient is not present at the determination block **66** then control passes to step **78**. At step **78**, given a negative output from the determination block at step **66**, the tissue has either not yet begun to

desiccate, a short in the system has occurred, or the seal cycle is complete. At step **78**, if the impedance is less than a low impedance value, the control module **14** will assume that a shorted electrode or instrument has occurred at step **80** and terminate operation thereof.

[0071] At step **78** if the low impedance threshold has not occurred, then control passes to decision block **82**. At decision block **82**, if the measured impedance is greater than a predetermined high impedance threshold value, then the control passes to step **84**. At step **84**, control module **14** assumes that the tissue seal has been achieved and will terminate operation.

[0072] At decision block **82**, if the measured impedance is not greater than a predetermined high impedance threshold value, the control passes to step **86**.

[0073] At step **86**, if the tissue impedance is found to be between the low impedance and the high impedance values, then control passes to a determination of whether a maximum amount of RF time has been exceeded. If this decision at step **86** is in the affirmative, the control module **14** assumes that the seal has not been made for a reason. Control will pass to step **88** and the operation is terminated for reason that the tissue seal has been assumed to be unsuccessful. Alternatively, if the maximum amount of time is not exceeded then the controller assumes that the tissue has not yet received enough RF energy to start desiccation. If the maximum amount of time is not exceeded, control passes to step **62** as indicated by a dotted line for further operation.

[0074] The initial conditions of the tissue seal or the initial conditions of touching the applicator with the electrode and applying the RF energy to the tissue are significant. Generally existing generators at step **58** of FIG. **4** will operate as follows: if the starting range was in a lower or low range, the initial power is made lower. Also, generally, if the sensed impedance was high or in a higher range, the initial power and starting voltage is made higher. The initial parameters may be obtained by the control module **14** shown in FIG. **1** by viewing a parameter lookup table. However, for an optimal tissue seal to occur, it is desirable to modulate and control the vaporization rate of fluids in the tissue. If the fluid in the tissue is heated in an uneven manner or in a manner that is too rapid, the fluid or liquid in the tissue will rapidly heat per unit time by the RF energy to expand and quickly traverse out of the tissue.

[0075] This "pop" or fluid rapidly escaping the tissue per unit time is disfavored for an optimal tissue seal condition. Thus, it is desirable to identify the initial point of fluid vaporization by the RF energy to modulate and decrease the amount of RF energy from either the electrosurgical output stage **20** or the power supply **22** to prevent such a rapid fluid vaporization for an ideal tissue seal and for a more productive initial operation of the electrosurgical generator **12**, particularly at step **55** through **58** of FIG. **4**.

[0076] Referring now to FIG. **5**, the control module **14** further has a software algorithm to control either the power supply **22** and/or the electrosurgical output stage **20** in response to an initial tissue impedance reading or reaction. The software algorithm of FIG. **5** determines, by sensing one or more parameters, whether a tissue reactance occurs. When the electrode or applicator is placed on the tissue at the surgical site "B" (shown on FIG. **1**), and RF energy is pulsed from the applicator, an initial reading is taken and a property or parameter such as tissue impedance is sensed by the sensor module **18** at step **90**. One skilled in the art should appreciate that various parameters can be sensed by the sensor module **18** such as a control variable, an energy, a temperature, a current, or other previously mentioned parameters that are all within the scope of the present disclosure.

[0077] Control is passed to a decision block **92**. At the decision block **92**, a determination is made. The determination is as to whether the initial reading has a parameter such as an impedance that rises or falls above some predetermined threshold. If the initial reading has an impedance value that is above, or below a predetermined threshold then the reading is disregarded. The "false" tissue impedance reading thus is not allowed to cycle through the algorithm of the control module **14**. Instead, the control is passed to step **94** to disregard the initial reading and then return to step **90** to continue sensing the impedance at surgical site "B" to allow for tissue impedance readings to cycle through the algorithm of the control module but only after a tissue reactance is determined.

[0078] Referring again to FIG. **5**, there is shown the logic flow diagram of an initial cycle. The initial impedance reading of step **90** is output to decision block **92**. At decision block **92**, if the sensed impedance value is a predetermined amount above the maximum impedance value that is a preset maximum impedance value threshold, a decision is made at step **92**. If the decision is in the affirmative, then the tissue impedance reading is disregarded at step **94**. Thereafter, the cycle is continued with the RF energy being regulated at the electrosurgical stage output **20** and being output at a low power initial pulse of RF energy level.

[0079] If the decision is in the negative at step **92**, control is passed to decision block **96**. At decision block **96**, if the sensed impedance value is an amount that is below the minimal impedance value or a preset minimal impedance value threshold, a decision is made at step **96**.

[0080] If the decision is in the affirmative, then the control module **14** assumes that a tissue reactance has not occurred and the reading is disregarded at step **94**, and operation is continued with the energy regulated at the electrosurgical stage output **20** and being output at an energy level that is a low power initial pulse of RF energy for sensing the properties at the surgical site "B" at step **90**.

[0081] If the level is between the preset maximum impedance value threshold and the preset minimum impedance value threshold then operation continued to step **98** and the sensor module **18** senses parameters including impedance and the control module **14** continually processes sensed properties at step **98**. The control then passes to step **100** to continually generate a power supply control signal and RF output in accordance, for example, with a predetermined curve based on power, impedance, current voltage, etc.

[0082] Referring now to another logic flow diagram as FIG. **6**, the algorithm also has an energy control mode that supplies energy to the applicator or electrode to prevent vaporizing the fluids in the tissue. Referring now to FIG. **6**, step **102** indicates to apply a low power initial pulse of RF energy to the tissue. Parameters are detected by the sensor module **18**, and the control module **14** determines the tissue impedance or another parameter from the sensed parameters in step **104**. Here, a reliable parameter may be stored in memory. Thereafter, control will pass to decision block **106**.

[0083] At decision block **106**, a decision is made as to whether the tissue reacts in response to the RF energy received. If so, the algorithm provides for an energy control

mode to avoid any "pop" effect by the electrode applying RF energy to the tissue. The reaction is defined by a specified increase in impedance above a minimum value reached previously. The specified increase in impedance is loaded by the control module **14** based on tissue type and/or properties as well as electrosurgical instruments being utilized. The minimum value reached previously is obtained by the control module **14** by accessing a stored map of continuous values, or alternatively, of a table or equivalent. If the tissue does react by indicating that the impedance is a specified increase above the minimum value reached previously, the electrosurgical generator **12** passes control to step **108** and the generator enters an energy control mode. If the tissue does not react at step **106**, the control passes to step **110**.

[0084] At step **110**, another decision is made as to whether the tissue reacts in response to the RF energy received. Here, the tissue reaction is defined by a specified drop or decrease in impedance below a set value for a period of time does not occur. The control module **14** assumes that if by this specified drop or decrease in impedance below a set value for a period of time at step **110** occurs then the reaction event is not stable. The control module **14** then assumes that the tissue has not reacted. The minimum value reached may be any substantially low impedance value or range of values that are complementary to indicate that no tissue reaction occurs such as 10 to 20 Ohms. If the tissue does react by indicating that the impedance is above the minimum set value to indicate that the tissue reacts, the electrosurgical generator **12** passes control to step **108** and the generator enters the energy control mode. If the tissue does not react at step **110**, the control will pass to step **102**. Optionally, the control module **14** may further have a timer. The timer may provide the control module **14** with a function that once a preset amount of time elapses without any tissue reactance during the time interval, control passes to step **102**.

[0085] The energy control mode is utilized to reduce vaporization of the liquid or fluid in the tissue. RF energy supplied by the electrosurgical output stage **20** will be controlled in a predetermined fashion to reduce vaporization. The output of the electrosurgical output stage **20** at the energy control mode may match or be complementary to an actual tissue impedance that is monitored by the sensor module **18** or may match to a preset amount or a preset slope of a change of an observed impedance per unit time. The preset amount in the energy control mode at step **108** is impedance that has a preset slope trajectory with time. The preset amount per unit time may be stored in a memory or a recorded medium or may be input or loaded into the system **10** using the user interface **16**.

[0086] The preset amount has a preset slope trajectory that is accessed from a database or is input using the user interface **16** or is the integral of impedance over time (dz/dt) at step **112**. The control module **14** thus adjusts the output of the electrosurgical output **20** and/or the power from the power supply **22** to match the preset slope trajectory at step **112** to modulate the RF energy output from the electrosurgical output **20** at the outset or initial conditions of operation. Control will then pass back to step **104** to determine the tissue impedance at step **104** at a subsequent time.

[0087] Referring now to FIG. **7**, there is shown a block diagram of another embodiment of the control module **14** having two control loops or an inner loop and an outer loop. The terms "inner" and "outer" form no spatial limitations to the control module **14** and are simply to distinguish between modules of the control module. The inner loop is controlled by an inner loop control module **114** and the outer loop is controlled by a second outer loop control module **116**. Both are software modules that are controlled by a processor or other suitable analog circuit of the control module **14**. Both the inner control module and the outer control module receive signals from the sensor module **18** as is known in the art. The inner loop control module **114** controls one or more parameters and controls a variable of the generator.

[0088] The inner loop control module **114** continually receives real time signals or sensed values from the sensor module **18**. The inner loop control module **114** also has a map of continuous values **118**. The inner loop control module **114** consults with the map **118**. The inner loop control module **114** obtains a desired inner loop value for the impedance or other parameter currently being sensed and derived by the signal being output by the sensor module **18**. The inner loop control module **114** uses an algorithm to compare real time sensed values to the desired inner loop values and then outputs a control signal to the electrosurgical output stage **20**. The control signal may control one or more parameters of the electrosurgical generator **10** such as for example current, power, voltage, duty cycle, frequency, waveform shape and other parameters.

[0089] The outer loop control module **116** is layered over the inner loop control module **114** and provides for an additional control of a variable for reaching a desired output value or effect. The outer loop control module **116** continually receives sensed values, such as current, voltage and temperature from the sensor module **18** at a time (t seconds), (t+1 seconds), (t+2 seconds), (t+3 seconds) for a predetermined amount of time etc. The outer loop control module **116** then performs calculations of the sensed values and stores the values.

[0090] The stored values include a value for a change in impedance (dz/dt) that is obtained in accordance with: $dz/dt=(z\times z(old))/(t\times t(old))$, wherein Z is impedance measure at time t, and wherein Z(old) is a previous impedance reading being measured at time t(old).

[0091] The outer loop desired value for a control value is obtained by accessing a stored map of continuous values shown as reference numeral **120**. The map **120** stores a desired rage of parameters including a change in impedance per unit time. The desired rate of a change in impedance per unit time or dz/dt is stored in the map **120**, may be constant, or may depend on a stage of the tissue seal cycle or may change over time. One skilled in the art should appreciate that the tissue is in a dynamic state during a surgical procedure and the outer control module **116** monitors a rate of change throughout the procedure, and stores such a change in map **120**.

[0092] The outer loop control module **116** compares a real time sensed value of a rate of change in the impedance at time (t) to the respective desired value at time (t) obtained from the map **120**. The outer loop control module **116** then determines if a desired outer value is met. If not met the control module **116** determines the ratio of a difference between the real time value and the desired outer value to the desired outer value.

[0093] If the desired outer value is not met, the outer loop control module **116** then generates a set point value. The set point value is provided to the inner loop control module **114**. The set point value may be raised when the real time value for the rate of change of impedance is lower than desired.

The set point value may be a ratio signal. The ratio signal is applied to the control signal or for altering the inner map **118** by raising or lowering a plotted curve of the inner map along a Y axis to form an altered inner map value.

[0094] The ratio signal is a proportional integral derivative control signal as is known in the art as (PID). The inner loop control module **114** reacts instantaneously and accesses the altered inner map values or series of inner mapped values. The inner loop control module **114** obtains a desired inner value from the outer loop and makes a comparison. The comparison is between the real time value of the control variable and the desired value. The inner control module then generates an RF command for the control variable without exceeding the desired inner value, and outputs the RF command to the electrosurgical output stage **20** for controlling voltage, current and/or power needed for achieving a desired tissue effect. The outer loop control module **116** uses the real time value of rate of change of impedance, temperature, rate of change of temperature, and/or total energy delivered to determine if a desired outer value has been reached which indicates completion of a tissue seal. Upon determination of seal completion, a stop signal is generated for stopping the sealing process. The outer loop continues to monitor, receive and process sensed values from the senor module **18**.

[0095] A control of current, voltage and/or power by the inner loop control module **116** improves system stability and control capabilities in low impedance ranges which are critical for seal initiation. Such low impedance ranges are about 0 to 20 ohms. The outer loop control module **116** enhances the control module's ability to control sealing in accordance with desired trends or events, to change seal intensity by changing the rate of change of impedance, and to enhance uniform sealing of tissue, i.e., normalize tissue in terms of variability, including tissue hydration, volume and composition.

[0096] With feedback control and continuous sensing of the tissue's condition, there is not a need to switch control variables (i.e., low/high end break points), which improves system stability as explained above.

[0097] Referring now again to the energy control mode as shown as step **108** in FIG. **6**, the outer loop control module **116** matches the impedance monitored to a preset slope trajectory by accessing a stored preset slope trajectory using values stored in map **120** as indicated by step **112** in FIG. **6**. Thereafter, the outer loop control module **116** outputs the matched preset slope trajectory by generating a ratio signal to the inner loop control module **114**. The ratio signal controls the RF signal using the matched preset slope trajectory. The outer loop control module **116** then continues to determine the tissue impedance. A significant advantage of the present disclosure is that the control module **14** in this manner may continually adjust to changes in tissue conditions without any "pop" or vaporization of the fluid in the tissue. The control system **10** can apply RF energy that is effectively controlled by one or more characteristics of the tissue rather than one or more program instructions that are independent of the characteristics of the tissue.

[0098] When in energy control mode, the control system **10** will continuously monitor for a drop in impedance below a predetermined value over time, signifying the reaction was not stable. The delivered output power will continue to be adjusted in accordance with the slope trajectory. When the tissue impedance, however increases above a predetermined level, the impedance slope trajectory stored in map **120** is recalculated. Once the tissue impedance is sensed to increase above the predetermined level, the "y" axis of the map **120** is recalibrated. The zero-point of the graph in map **120** is aligned with the time point "t" (threshold point), i.e., the point in time where the impedance signal calculated by the inner loop control module **114** increases above the predetermined or threshold point. After a stable reaction point is identified, the associated time that the impedance or signal passed through the threshold is recorded by the outer control module **116** in the map **120**. This threshold time marks the initial slope trajectory point as the "t" (threshold point) in the map **120**. The outer control module **116** then uses the initial slope trajectory point stored in the map **120** to control the inner control module **114** and applies the ratio signal from that point onwards so that data previously recorded from the initial slope trajectory point can be disregarded.

[0099] Thereafter, this correction or reset can lead to a RF pulsing that is effectively controlled by the tissue rather than a preset software to avoid any vaporization of fluids in the tissue at the initial setting. It is envisioned that the present disclosure algorithm, system and method described herein can be used with both the monopolar and bipolar vessel sealing system or tissue fusion devices such as those described in commonly owned U.S. patent application Ser. Nos. 10/460,926, 10/873,860 and U.S. Provisional Ser. No. 60/722,177. The entire contents of all of which are herein incorporated by reference in their entirety.

[0100] It should be understood that the foregoing description is only illustrative of the present disclosure. Various alternatives and modifications can be devised by those skilled in the art without departing from the disclosure. Accordingly, the present disclosure is intended to embrace all such alternatives, modifications and variances. The embodiments described with reference to the attached drawing figures are presented only to demonstrate certain examples of the disclosure. Other elements, steps, methods and techniques that are insubstantially different from those described above and/or in the appended claims are also intended to be within the scope of the disclosure.

What is claimed is:

1. A system for performing an electrosurgical procedure at a surgical site, the system comprising:

a sensor configured to continually sense at least one of an electrical and physical property of tissue at a surgical site and to generate a sensor signal as a function thereof; and

a control module configured to process the sensor signal using a processor, an algorithm, and a map having at least one predetermined value, the control module further configured to compare the sensor signal to a predetermined level to determine reliability of the sensor signal and to signal an electrosurgical generator in response to a reliable sensor signal such that the electrosurgical generator enters energy control mode, wherein the electrosurgical generator matches an output of the control signal with a predetermined value from the map.

2. A system according to claim **1**, wherein the control module compares the sensor signal to a predetermined level and determines the reliability of the sensor signal at an initial operation of the system.

3. A system according to claim **1**, wherein at least one parameter of the map is recalculated based in part on a control signal derived from a reliable sensor signal.

4. A system according to claim **1**, wherein during the energy control mode the electrosurgical generator is configured to adjust a parameter selected from the group consisting of a voltage adjustment, a current adjustment, a pulse width adjustment, a pulse frequency adjustment, an amplitude adjustment, a crest factor adjustment, a duty cycle adjustment, a repetition rate adjustment, a waveform shape adjustment, and a wave adjustment.

5. A system according to claim **1**, further comprising a user interface which is configured to allow a user to select a surgical parameter selected form the group consisting of a type of instrument being connected to the generator, a tissue type, and a desired surgical effect.

6. A system according to claim **1**, wherein the control module determines an impedance from the sensor signal, and wherein the control module is configured to compare the impedance to a predetermined level to verify a tissue reactance, wherein once reactance is verified the control signal is configured to reference a stored value corresponding to the impedance from the map, and wherein the control module is configured to control the generator based in part on the stored value.

7. A system according to claim **6**, wherein the stored value is a preset slope trajectory of a change of the impedance per unit of time.

8. A system according to claim **6**, wherein the stored value is derived from past stored data recorded in a memory.

9. A system according to claim **6**, wherein the stored value is a change in impedance over time from the map.

10. A system according to claim **6**, wherein if the impedance drops below a predetermined threshold over a predetermined period of time, the control module disregards the measured impedance, and the control module thereafter continues to sense whether the tissue reactance occurs.

11. A system according to claim **6**, wherein the control module disregards the impedance when no tissue reactance is determined.

12. A system according to claim **1**, wherein the sensor is selected from the group consisting of a voltage sensor, a current sensor, a temperature sensor, an RMS voltage sensor, an RMS current sensor, and a leakage current sensor.

13. A method for performing an electrosurgical procedure at a surgical site on a patient, the method comprising:

continually sensing electrical and physical properties of the surgical site and generating a sensor signal as a function thereof;

processing the sensor signal using a processor, an algorithm, and a map having at least one value to verify a reactance of tissue at the surgical site; and

entering an energy control mode, wherein the electrosurgical generator matches an output of the control signal with a value from the map, based on the determination of the reactance of tissue in the processing step.

14. The method according claim **13**, wherein the sensed electrical and physical properties of the surgical site of the continually sensing step are disregarded if no tissue reactance is verified at the surgical site.

15. The method according claim **13**, wherein the processing step further includes comparing the sensor signal to a predetermined level and determining a reliability of the sensor signal.

16. A system comprising:

a sensor configured to continually sense at least one of an electrical and physical property of the surgical site and to generate a sensor signal as a function thereof; and

a control module configured to process the sensor signal using a processor, an algorithm, and a map having at least one value, the control module further configured to verify tissue reactance and to signal an electrosurgical generator based on the verification of tissue reactance such that the electrosurgical generator enters energy control mode, the electrosurgical generator matches an output of the control signal with a value from the map, wherein the control module is configured to recalculate the map when tissue impedance increases above a predetermined threshold and to signal the electrosurgical generator to renter energy control mode.

17. A system according to claim **16**, wherein during the energy control mode the electrosurgical generator is configured to adjust a parameter selected from the group consisting of a voltage adjustment, a current adjustment, a pulse width adjustment, a pulse frequency adjustment, an amplitude adjustment, a crest factor adjustment, a duty cycle adjustment, a repetition rate adjustment, a waveform shape adjustment, and a wave adjustment.

18. A system according to claim **16**, further comprising a user interface which is configured to allow a user to select a surgical parameter selected form the group consisting of a type of instrument being connected to the generator, a tissue type, and a desired surgical effect.

19. A system according to claim **16**, wherein the control module determines an impedance from the sensor signal, and wherein the control module is configured to compare the impedance to a predetermined level to verified a tissue reactance, wherein once reactance is verified the control signal is configured to reference a stored value corresponding to the impedance from the map, and wherein the control module is configured to control the generator based in part on the value.

20. A system according to claim **19**, wherein if the impedance drops below a predetermined threshold over a predetermined period of time, the control module disregards the measured impedance, and the control module thereafter continues to sense whether tissue reactance occurs.

* * * * *