US009950635B1

(12) **United States Patent**
Trego

(10) **Patent No.: US 9,950,635 B1**
(45) **Date of Patent: Apr. 24, 2018**

(54) **ELECTRIFIED VEHICLE HAVING A CHARGING PORT LOCK CONNECTED TO A MANUAL RELEASE CABLE**

(71) Applicant: **FORD GLOBAL TECHNOLOGIES, LLC**, Dearborn, MI (US)

(72) Inventor: **William Christopher Trego**, Royal Oak, MI (US)

(73) Assignee: **Ford Global Technologies, LLC**, Dearborn, MI (US)

(*) Notice: Subject to any disclaimer, the term of this patent is extended or adjusted under 35 U.S.C. 154(b) by 0 days.

(21) Appl. No.: **15/597,785**

(22) Filed: **May 17, 2017**

(51) **Int. Cl.**

H01R 13/627	(2006.01)
B60L 11/18	(2006.01)
F16C 1/10	(2006.01)
B60R 16/02	(2006.01)
E05B 83/34	(2014.01)
E05C 1/12	(2006.01)
H01R 13/447	(2006.01)
H01R 13/639	(2006.01)
B60K 6/365	(2007.10)
B60K 6/40	(2007.10)

(52) **U.S. Cl.**
CPC ***B60L 11/1818*** (2013.01); ***B60R 16/0207*** (2013.01); ***E05B 83/34*** (2013.01); ***E05C 1/12*** (2013.01); ***F16C 1/10*** (2013.01); ***H01R 13/447*** (2013.01); ***H01R 13/6275*** (2013.01); ***H01R 13/6397*** (2013.01); *B60K 6/365* (2013.01); *B60K 6/40* (2013.01); *B60Y 2200/92* (2013.01); *B60Y 2400/73* (2013.01); *Y10S 903/91* (2013.01); *Y10S 903/951* (2013.01)

(58) **Field of Classification Search**
CPC H01R 2201/26; H01R 13/6397; H01R 33/97; H01R 13/629; H01R 13/6271; H01R 13/6275
USPC 439/34, 304, 310, 352
See application file for complete search history.

(56) **References Cited**

U.S. PATENT DOCUMENTS

8,075,329	B1	12/2011	Janarthanam et al.	
8,172,599	B2	5/2012	Konchan	
8,550,833	B2	10/2013	Martin	
8,690,591	B2 *	4/2014	Charnesky	B60L 11/1818 191/12.4
8,712,648	B2	4/2014	Charnesky	
9,533,586	B2 *	1/2017	Kahara	B60L 11/1818
2011/0287649	A1	11/2011	Kurumizawa et al.	
2012/0088382	A1 *	4/2012	Konchan	B60L 11/1818 439/153
2012/0313580	A1	12/2012	Charnesky et al.	

FOREIGN PATENT DOCUMENTS

WO WO2011002770 A1 1/2011

* cited by examiner

Primary Examiner — Chandrika Prasad
(74) *Attorney, Agent, or Firm* — Carlson, Gaskey & Olds P.C.

(57) **ABSTRACT**

An electrified vehicle according to a non-limiting aspect of the present disclosure includes, among other things, a charging port including a lock, an electrical harness electrically coupled to the charging port, a battery assembly electrically coupled to the charging port by the electrical harness, and a manual release cable connected to the lock and routed along the electrical harness. This disclosure also relates to a method.

20 Claims, 5 Drawing Sheets

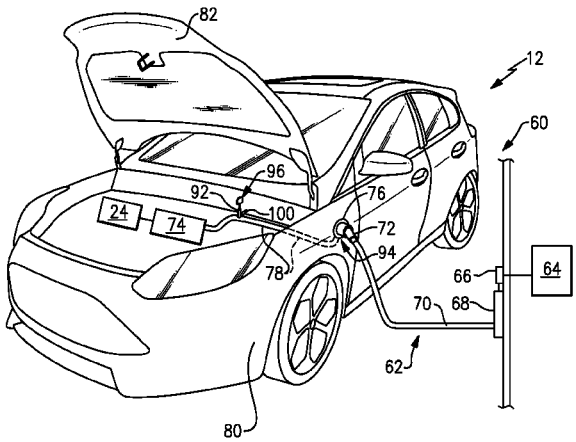

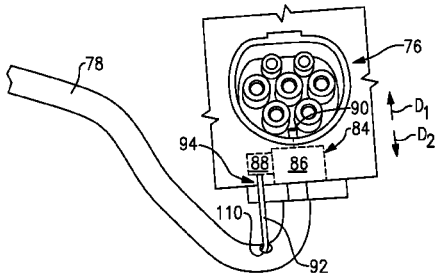

ChargeLogic LLC - **Ex. 2014**
IPR2026-00378
Tesla Inc. v. ChargeLogic LLC

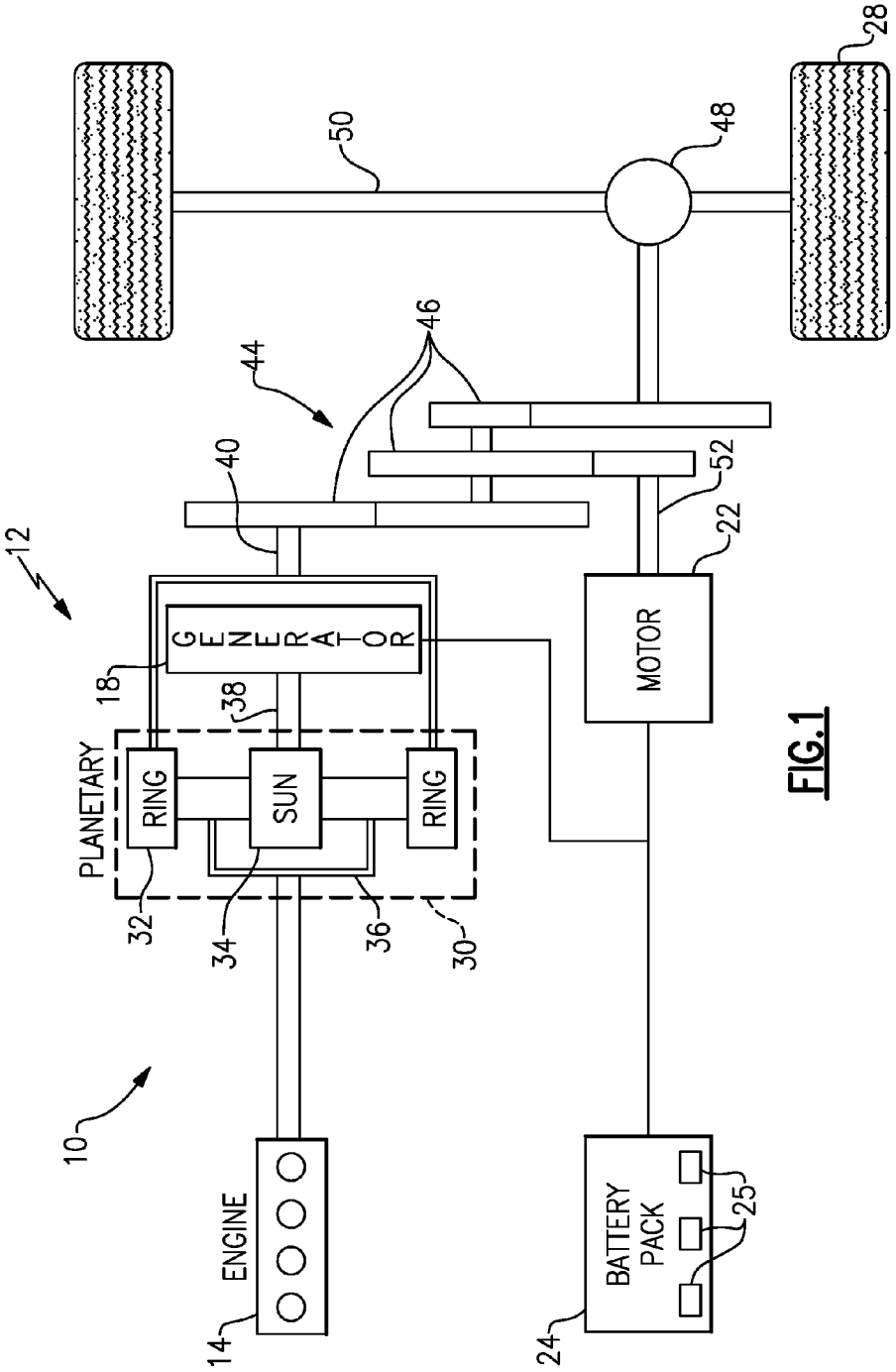
10
12
14
ENGINE
18
GENERATOR
PLANETARY
RING
SUN
RING
32
34
36
30
38
40
44
46
48
50
52
22
MOTOR
24
BATTERY PACK
25
28

FIG. 1

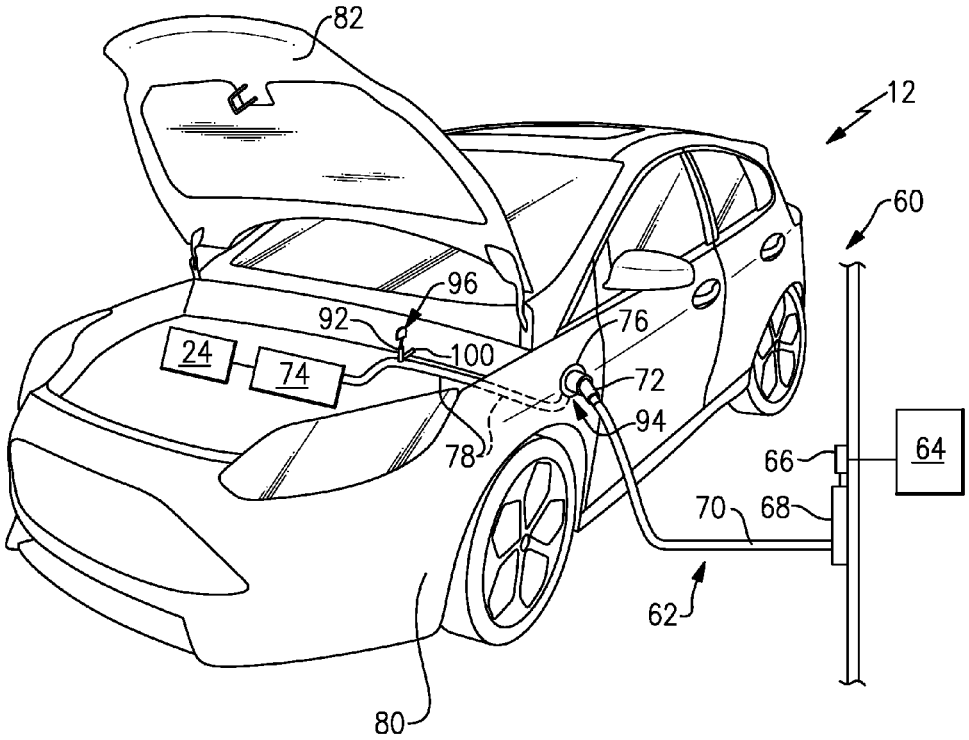

FIG.2

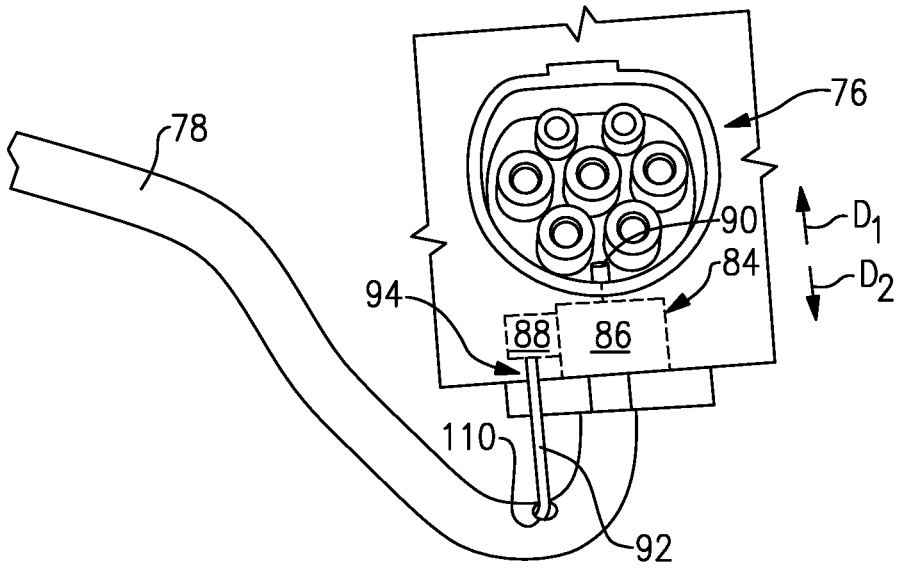

FIG.3

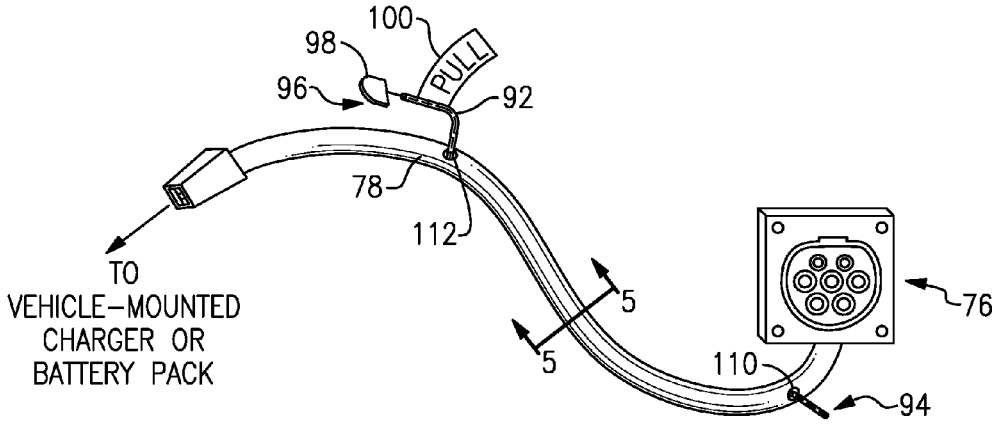
100
98
PULL
96
92
78
112
TO
VEHICLE-MOUNTED
CHARGER OR
BATTERY PACK
5
5
76
110
94

FIG.4

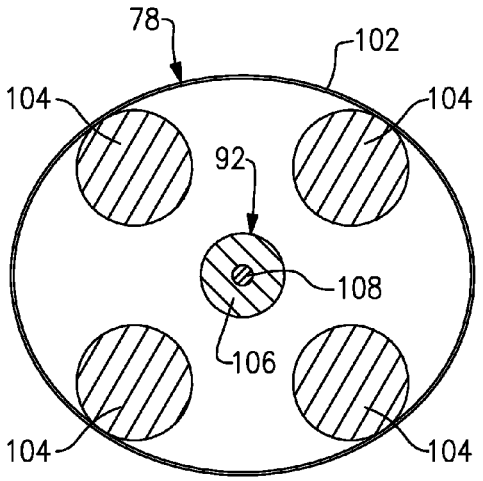
78
102
104
104
92
108
106
104
104

FIG.5

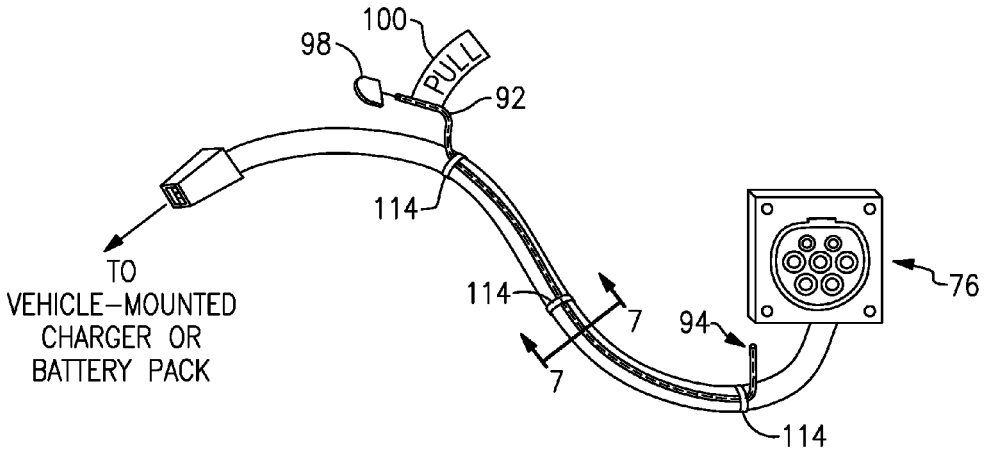
100
98
PULL
92
114
TO
VEHICLE-MOUNTED
CHARGER OR
BATTERY PACK
114
7
7
94
76
114

FIG.6

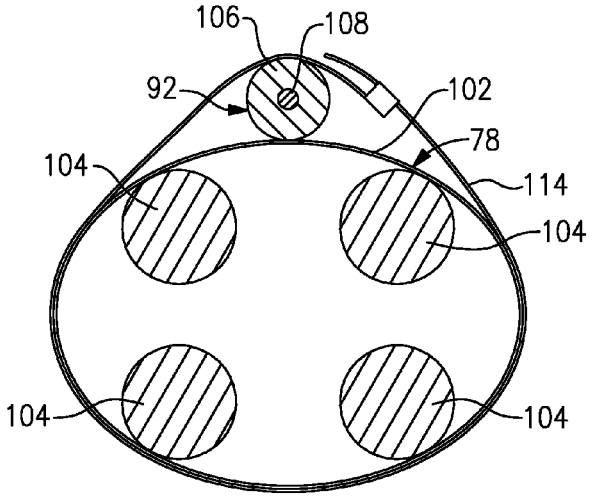
106
108
92
102
78
104
114
104
104
104

FIG.7

ELECTRIFIED VEHICLE HAVING A CHARGING PORT LOCK CONNECTED TO A MANUAL RELEASE CABLE

BACKGROUND

This disclosure relates to a charging port for an electrified vehicle. In particular, this disclosure relates to a manual release for a charging port lock.

The need to reduce automotive fuel consumption and emissions is well known. Therefore, vehicles are being developed that reduce or completely eliminate reliance on internal combustion engines. Electrified vehicles are one type of vehicle being developed for this purpose. In general, electrified vehicles differ from conventional motor vehicles because they are selectively driven by battery powered electric machines. Conventional motor vehicles, by contrast, rely exclusively on an internal combustion engine to propel the vehicle.

Charging a battery assembly of an electrified vehicle, such as a plug-in hybrid electric vehicle (PHEV) or battery electric vehicle (BEV), can involve electrically coupling the electrified vehicle to an external power source. Electrified vehicles typically include a charging port configured to receive a plug, which is electrically coupled to the external power source. Some known charging ports include a lock configured to lock the plug to the charging port, which prevents theft of the plug, and unintended separation of the charging circuits while the vehicle is charging.

SUMMARY

An electrified vehicle according to a non-limiting aspect of the present disclosure includes, among other things, a charging port including a lock, an electrical harness electrically coupled to the charging port, a battery assembly electrically coupled to the charging port by the electrical harness, and a manual release cable connected to the lock and routed at least partially within the electrical harness.

In a further non-limiting embodiment of the foregoing electrified vehicle, the lock includes an actuator and a manual release, and the manual release cable is connected to the manual release.

In a further non-limiting embodiment of any of the foregoing electrified vehicles, the actuator is configured to move a pin between a lock position and a release position when the lock is in a normal operating condition, and the manual release is configured to move the pin to the release position when the lock is in a stuck on plug condition.

In a further non-limiting embodiment of any of the foregoing electrified vehicles, the manual release cable includes a first end connected to the lock and a second end connected to a handle.

In a further non-limiting embodiment of any of the foregoing electrified vehicles, the handle is provided under a hood of the electrified vehicle.

In a further non-limiting embodiment of any of the foregoing electrified vehicles, the manual release cable includes an identifying tag adjacent the handle.

In a further non-limiting embodiment of any of the foregoing electrified vehicles, the handle includes a loop.

In a further non-limiting embodiment of any of the foregoing electrified vehicles, the manual release cable includes a cable within a housing, and the cable is moveable relative to the housing to transmit mechanical force.

In a further non-limiting embodiment of any of the foregoing electrified vehicles, the electrical harness includes at least one electrical wire within a housing, and the manual release cable is at least partially provided within the housing of the electrical harness.

In a further non-limiting embodiment of any of the foregoing electrified vehicles, the housing of the electrical harness includes a first port adjacent the charging port and a second port adjacent the battery assembly, a first end of the manual release cable projects from the first port, and a second end of the manual release cable projects from the second port.

In a further non-limiting embodiment of any of the foregoing electrified vehicles, the electrified vehicle further includes a charger electrically coupled to the battery assembly. The electrical harness electrically couples the charging port to the charger.

In a further non-limiting embodiment of any of the foregoing electrified vehicles, the electrified vehicle is one of a battery electric vehicle (BEV) and a plug-in hybrid electric vehicle (PHEV).

Another electrified vehicle according to a non-limiting aspect of the present disclosure includes, among other things, a charging port including a lock, an electrical harness electrically coupled to the charging port, a battery assembly electrically coupled to the charging port by the electrical harness, and a manual release cable connected to the lock and routed along an exterior of the electrical harness. The manual release cable includes a first end connected to the lock and a second end connected to a handle.

In a further non-limiting embodiment of the foregoing electrified vehicle, the handle is provided under a hood of the electrified vehicle.

In a further non-limiting embodiment of any of the foregoing electrified vehicles, the manual release cable is connected to the exterior of the electrical harness by way of at least one fastener.

A method according to an exemplary aspect of the present disclosure includes, among other things, releasing a lock of a charging port of an electrified vehicle by pulling a manual release cable. The manual release cable is routed at least partially within an electrical harness electrically coupled to the charging port.

In a further non-limiting embodiment of the foregoing method, the manual release cable includes a first end connected to the lock and a second end connected to a handle, and the step of releasing the lock includes pulling the handle.

In a further non-limiting embodiment of any of the foregoing methods, the handle is provided under a hood of the electrified vehicle.

In a further non-limiting embodiment of any of the foregoing methods, the electrical harness includes at least one electrical wire within a housing, and the manual release cable is at least partially provided within the housing of the electrical harness.

In a further non-limiting embodiment of any of the foregoing methods, the lock includes an actuator configured to move a pin between a lock position and a release position when the lock is in a normal operating condition, and the step of releasing the lock includes moving the pin to the release position when the lock is in a stuck on plug condition.

BRIEF DESCRIPTION OF THE DRAWINGS

FIG. **1** schematically illustrates a powertrain of an electrified vehicle.

FIG. **2** illustrates an example electrified vehicle incorporating the powertrain of FIG. **1**, and further incorporating a manual release for a charging port lock.

FIG. **3** illustrates the detail of an example charging port for the vehicle of FIG. **2**.

FIG. **4** illustrates a first arrangement of an electrical harness and manual release cable.

FIG. **5** is a cross-sectional view taken along line **5-5** in FIG. **4**.

FIG. **6** illustrates a second arrangement of an electrical harness and manual release cable.

FIG. **7** is a cross-sectional view taken along line **7-7** in FIG. **6**.

DETAILED DESCRIPTION

This disclosure relates to a manual release for a charging port of an electrified vehicle, and also relates to a method of using the same. In this disclosure, the electrified vehicle includes a charging port having a lock. The electrified vehicle further includes a manual release cable connected to the lock and routed along an electrical harness. The electrical harness electrically couples the charging port to a battery assembly. Routing the manual release cable along the electrical harness increases the ease of assembly and provides a handle of the manual release cable in a convenient, easily-accessed location.

FIG. **1** schematically illustrates a powertrain **10** for an electrified vehicle **12**. Although depicted as a hybrid electric vehicle (HEV), it should be understood that the concepts described herein are not limited to HEVs and could extend to other electrified vehicles, including, but not limited to, plug-in hybrid electric vehicles (PHEVs) and battery electric vehicles (BEVs).

In one embodiment, the powertrain **10** is a power-split powertrain system that employs a first drive system and a second drive system. The first drive system includes a combination of an engine **14** and a generator **18** (i.e., a first electric machine). The second drive system includes at least a motor **22** (i.e., a second electric machine), the generator **18**, and a battery assembly **24**. In this example, the second drive system is considered an electric drive system of the powertrain **10**. The first and second drive systems generate torque to drive one or more sets of vehicle drive wheels **28** of the electrified vehicle **12**. Although a power-split configuration is shown, this disclosure extends to any hybrid or electric vehicle including full hybrids, parallel hybrids, series hybrids, mild hybrids or micro hybrids.

The engine **14**, which in one embodiment is an internal combustion engine, and the generator **18** may be connected through a power transfer unit **30**, such as a planetary gear set. Of course, other types of power transfer units, including other gear sets and transmissions, may be used to connect the engine **14** to the generator **18**. In one non-limiting embodiment, the power transfer unit **30** is a planetary gear set that includes a ring gear **32**, a sun gear **34**, and a carrier assembly **36**.

The generator **18** can be driven by the engine **14** through the power transfer unit **30** to convert kinetic energy to electrical energy. The generator **18** can alternatively function as a motor to convert electrical energy into kinetic energy, thereby outputting torque to a shaft **38** connected to the power transfer unit **30**. Because the generator **18** is operatively connected to the engine **14**, the speed of the engine **14** can be controlled by the generator **18**.

The ring gear **32** of the power transfer unit **30** may be connected to a shaft **40**, which is connected to vehicle drive wheels **28** through a second power transfer unit **44**. The second power transfer unit **44** may include a gear set having a plurality of gears **46**. Other power transfer units may also be suitable. The gears **46** transfer torque from the engine **14** to a differential **48** to ultimately provide traction to the vehicle drive wheels **28**. The differential **48** may include a plurality of gears that enable the transfer of torque to the vehicle drive wheels **28**. In one embodiment, the second power transfer unit **44** is mechanically coupled to an axle **50** through the differential **48** to distribute torque to the vehicle drive wheels **28**.

The motor **22** can also be employed to drive the vehicle drive wheels **28** by outputting torque to a shaft **52** that is also connected to the second power transfer unit **44**. In one embodiment, the motor **22** and the generator **18** cooperate as part of a regenerative braking system in which both the motor **22** and the generator **18** can be employed as motors to output torque. For example, the motor **22** and the generator **18** can each output electrical power to the battery assembly **24**.

The battery assembly **24** is an exemplary electrified vehicle battery. The battery assembly **24** may be a high voltage traction battery pack that includes a plurality of battery assemblies **25** (i.e., battery arrays or groupings of battery cells) capable of outputting electrical power to operate the motor **22**, the generator **18** and/or other electrical loads of the electrified vehicle **12**. Other types of energy storage devices and/or output devices can also be used to electrically power the electrified vehicle **12**.

In one non-limiting embodiment, the electrified vehicle **12** has two basic operating modes. The electrified vehicle **12** may operate in an Electric Vehicle (EV) mode where the motor **22** is used (generally without assistance from the engine **14**) for vehicle propulsion, thereby depleting the battery assembly **24** state of charge up to its maximum allowable discharging rate under certain driving patterns/cycles. The EV mode is an example of a charge depleting mode of operation for the electrified vehicle **12**. During EV mode, the state of charge of the battery assembly **24** may increase in some circumstances, for example due to a period of regenerative braking. The engine **14** is generally OFF under a default EV mode but could be operated as necessary based on a vehicle system state or as permitted by the operator.

The electrified vehicle **12** may additionally operate in a Hybrid (HEV) mode in which the engine **14** and the motor **22** are both used for vehicle propulsion. The HEV mode is an example of a charge sustaining mode of operation for the electrified vehicle **12**. During the HEV mode, the electrified vehicle **12** may reduce the motor **22** propulsion usage in order to maintain the state of charge of the battery assembly **24** at a constant or approximately constant level by increasing the engine **14** propulsion usage. The electrified vehicle **12** may be operated in other operating modes in addition to the EV and HEV modes within the scope of this disclosure.

FIG. **2** illustrates an example electrified vehicle **12**, which may incorporate the powertrain **10** of FIG. **1**. In FIG. **2**, the electrified vehicle **12** is a plug-in hybrid electric vehicle (PHEV). This disclosure extends to other types of electrified vehicles, however. The electrified vehicle **12** is shown in a charging position in which the electrified vehicle **12** is electrically coupled to a charging station **60**.

The charging station **60** includes a tether-type charger assembly **62** and a grid power source **64**. The charger assembly **62** conveys power from the grid power source **64** to the electrified vehicle **12**. In this example, the charger

assembly **62** includes a wall outlet plug **66**, a charger body **68** within a housing, a charger cable **70**, and a vehicle charger plug **72**.

Charging the electrified vehicle **12** using the charging station **60** involves positioning the electrified vehicle **12** near the charging station **60** and electrically coupling the vehicle charger plug **72** to the electrified vehicle **12**. Power can then move from the grid power source **64** to the electrified vehicle **12**, and specifically battery assembly **24** of the powertrain **10**. The battery assembly **24** can be charged when the electrified vehicle **12** is in the charging position.

In this example, the battery assembly **24** is electrically coupled to the grid power source **64** by way of a vehicle-mounted charger **74**. The vehicle-mounted charger **74** converts incoming AC current to DC current. The vehicle-mounted charger **74** is not present in all examples. Alternatively, in some examples, the vehicle-mounted charger **74** is incorporated into the battery assembly **24** or charging station **60**.

The vehicle **12** includes a charging port **76** configured to receive the vehicle charger plug **72**. The charging port **76** electrically couples the vehicle charger plug **72** to the vehicle-mounted charger **74**, if present, or directly to the battery assembly **24** via an electrical harness **78**. In this example, the electrical harness **78** is routed through the vehicle body **80** and under a hood **82** of the vehicle, where the battery assembly **24** and vehicle-mounted charger **74** are located. As used herein, the vehicle body **80** refers to the paneling and frame of the vehicle **12**.

It is sometimes desirable to lock the vehicle charger plug **72** to the charging port **76** during charging to prevent theft of the vehicle charger plug **72**, and unintended separation of the vehicle charger plug **72** from charging circuits while the vehicle is charging. In some geographic regions, regulations may require that the vehicle charger plug **72** locks to the charging port **76** during charging.

FIG. **3** illustrates the charging port **76** in detail. In this example, the charging port **76** includes a lock **84** configured to selectively lock the vehicle charger plug **72** to the charging port **76**. The lock **84** in this example includes an actuator **86** and a manual release **88**, both of which are illustrated schematically. The actuator **86** is configured to move a pin **90** in directions D_1, D_2 between a lock position and a release position when the lock is in a normal operating condition.

In FIG. **3**, the pin **90** has been moved in direction D_1 to a lock position, in which the pin **90** is configured to project into a corresponding recess of the vehicle charger plug **72**, thereby locking the vehicle charger plug **72** to the charging port **76**. In the release position, the actuator **86** is configured to move the pin **90** in the direction D_2 out of the recess in the vehicle charger plug **72**, which allows a user to detach the vehicle charger plug **72** from the charging port **76**. The actuator **86** may be programmed to move the pin **90** between the lock and release positions upon actuation of a button adjacent the charging port **76**, in one example. The actuator **86** may be responsive to other commands and instructions from the vehicle **12** in other examples.

While only one pin **90** is illustrated, it should be understood that the lock **84** could include additional pins. Further, this disclosure is not limited to the particular location of the pin **90**. The lock **84** could include pins placed elsewhere around the charging port **76**.

In some scenarios, it is possible for the lock **84** to essentially become stuck in the lock position, which is sometimes referred to as the vehicle being "stuck on plug." In the "stuck on plug" condition, the actuator **86** is at least momentarily incapable of moving the pin **90** in the direction D_2 to the release position. The manual release **88** is configured to manually move the pin **90** in the direction D_2 in such a condition.

While the actuator **86** and manual release **88** are illustrated schematically in FIG. **3**, it should be understood that this disclosure extends to all types of actuators and manual releases. The actuator **86**, for example, can include a motor and one or more gears and links, and can be responsive to instructions from a controller, such as a vehicle system controller (VSC). The manual release **88** may include one or more links configured to essentially override the actuator **86** and move the pin **90** in the direction D_2 to the release position.

The manual release **88** is activated manually under force exerted by a user, in this example. This disclosure provides a manual release cable **92** connected to the lock **84** and routed along the electrical harness **78**. In particular, the manual release cable **92** is connected directly to the manual release **88** at a first end **94**, and a second end **96** (FIG. **2**) of the manual release cable **92** is accessible by a user under the hood **82** of the vehicle **12**.

In one example of this disclosure, the manual release cable **92** includes a cable provided within a housing. The cable is moveable within the housing to transmit mechanical force between the first end **94** and the second end **96** of the manual release cable **92**. In one example, the manual release cable **92** is a Bowden cable.

The manual release cable **92** is routed along the electrical harness **78** in such a way that the two components provide a single assembly. Thus, a manufacturer can deliver a single assembly, which includes both the manual release cable **92** and the electrical harness **78**, to an assembly plant. An assembly worker can install the assembly as part of a single operational step. Further, as will be described below, the manual release cable **92** is arranged such that it is easily accessed by a user under the hood **82** of the vehicle **12**.

With joint reference to FIGS. **2** and **4**, the manual release cable **92** includes a handle **98** at the second end **96** in this example. The handle **98** is configured to receive a user's hand or finger. In one example, the handle **98** is a loop. In another example, the handle **98** resembles a ripcord handle. This disclosure extends to other types of handles, however. In order to activate the manual release **88**, a user grabs hold of the handle **98** and exerts a pulling force on the handle **98**. An identifying tag **100** with a phrase such as "PULL" may be provided on the manual release cable **92** adjacent the handle **98**.

FIG. **4** illustrates the charging port **76**, electrical harness **78**, and manual release cable **92** without the remainder of the vehicle **12** for ease of reference. In the embodiment of FIG. **4**, the manual release cable **92** is routed within at least a portion of the electrical harness **78**.

FIG. **5** is a cross-sectional view of the electrical harness **78**. In FIG. **5**, the electrical harness **78** includes a housing **102** and a plurality of electrical wires **104** electrically coupled between the charging port **76** and the vehicle-mounted charger **74** (if present) and battery assembly **24**. The manual release cable **92** includes a housing **106** and a cable **108** disposed within the housing **106**. As mentioned above, the cable **108** is moveable relative to the housing **106** to transmit mechanical force.

In the embodiment of FIG. **4**, the housing **102** of the electrical harness **78** includes a first port **110** adjacent the charging port **76** and a second port **112** adjacent the vehicle-mounted charger **74** (if present) and the battery assembly **24**. The first and second ports **110**, **112** are openings in the

housing **102** of the electrical harness **78** that allow the first and second ends **94**, **96** of the manual release cable **92** to project outward for attachment to the manual release **88** and the handle **98**, respectively. As shown in FIG. **4**, substantially the entire length of the manual release cable **92** is routed within the housing **102** of the electrical harness **78** in this example. Embedding at least a portion of the manual release cable **92** in the electrical harness **78** increases the ease of assembling the vehicle **12** and provides the handle **98** in a convenient and accessible location under the hood **82**.

In another embodiment, shown in FIG. **6**, the manual release cable **92** is attached to the exterior surface, which is provided by the housing **102**, of the electrical harness **78** by a fastener. In FIG. **6**, there are three such fasteners **114** spaced-apart from one another along the length of the electrical harness **78**. FIG. **7** is a cross-sectional view illustrating the manual release cable **92** attached to the housing **102** by the fasteners **114**. In the embodiment of FIGS. **6-7**, the fasteners **114** are cable ties (less formally known as zip ties). This disclosure is not limited to a particular fastener type, however.

This disclosure provides a combination electrical harness-manual release cable assembly, which reduces the number of parts for assembly in the vehicle. Thus, the ease of vehicle assembly is increased. Both embodiments of the present disclosure arrange the handle **98** of the manual release cable **92** in an easily-accessed location under the hood **82** of the vehicle **12**, which allows users to activate the manual release **88** themselves, without requiring special tools, and without needing to call roadside assistance.

It should be understood that terms such as "about," "substantially," and "generally" are not intended to be boundaryless terms, and should be interpreted consistent with the way one skilled in the art would interpret those terms.

Although the different examples have the specific components shown in the illustrations, embodiments of this disclosure are not limited to those particular combinations. It is possible to use some of the components or features from one of the examples in combination with features or components from another one of the examples.

One of ordinary skill in this art would understand that the above-described embodiments are exemplary and non-limiting. That is, modifications of this disclosure would come within the scope of the claims. Accordingly, the following claims should be studied to determine their true scope and content.

The invention claimed is:

1. An electrified vehicle, comprising:
- a charging port including a lock;
- an electrical harness electrically coupled to the charging port;
- a battery assembly electrically coupled to the charging port by the electrical harness; and
- a manual release cable connected to the lock and routed at least partially within the electrical harness.

2. The electrified vehicle as recited in claim **1**, wherein the lock includes an actuator and a manual release, and wherein the manual release cable is connected to the manual release.

3. The electrified vehicle as recited in claim **2**, wherein:
- the actuator is configured to move a pin between a lock position and a release position when the lock is in a normal operating condition, and
- the manual release is configured to move the pin to the release position when the lock is in a stuck on plug condition.

4. The electrified vehicle as recited in claim **1**, wherein the manual release cable includes a first end connected to the lock and a second end connected to a handle.

5. The electrified vehicle as recited in claim **4**, wherein the handle is provided under a hood of the electrified vehicle.

6. The electrified vehicle as recited in claim **5**, wherein the manual release cable includes an identifying tag adjacent the handle.

7. The electrified vehicle as recited in claim **4**, wherein the handle includes a loop.

8. The electrified vehicle as recited in claim **1**, wherein the manual release cable includes a cable within a housing, the cable moveable relative to the housing to transmit mechanical force.

9. The electrified vehicle as recited in claim **8**, wherein the electrical harness includes at least one electrical wire within a housing, and wherein the manual release cable is at least partially provided within the housing of the electrical harness.

10. The electrified vehicle as recited in claim **9**, wherein:
- the housing of the electrical harness includes a first port adjacent the charging port and a second port adjacent the battery assembly,
- a first end of the manual release cable projects from the first port, and
- a second end of the manual release cable projects from the second port.

11. The electrified vehicle as recited in claim **1**, further comprising a charger electrically coupled to the battery assembly, the electrical harness electrically coupling the charging port to the charger.

12. The electrified vehicle as recited in claim **1**, wherein the electrified vehicle is one of a battery electric vehicle (BEV) and a plug-in hybrid electric vehicle (PHEV).

13. An electrified vehicle, comprising:
- a charging port including a lock;
- an electrical harness electrically coupled to the charging port;
- a battery assembly electrically coupled to the charging port by the electrical harness; and
- a manual release cable connected to the lock and routed along an exterior of the electrical harness, wherein the manual release cable includes a first end connected to the lock and a second end connected to a handle.

14. The electrified vehicle as recited in claim **13**, wherein the handle is provided under a hood of the electrified vehicle.

15. The electrified vehicle as recited in claim **13**, wherein the manual release cable is connected to the exterior of the electrical harness by way of at least one fastener.

16. A method, comprising:
- releasing a lock of a charging port of an electrified vehicle by pulling a manual release cable, the manual release cable routed at least partially within an electrical harness electrically coupled to the charging port.

17. The method as recited in claim **16**, wherein:
- the manual release cable includes a first end connected to the lock and a second end connected to a handle, and
- the step of releasing the lock includes pulling the handle.

18. The method recited in claim **17**, wherein the handle is provided under a hood of the electrified vehicle.

19. The method as recited in claim **16**, wherein the electrical harness includes at least one electrical wire within a housing, and wherein the manual release cable is at least partially provided within the housing of the electrical harness.

20. The method as recited in claim **16**, wherein the lock includes an actuator configured to move a pin between a lock position and a release position when the lock is in a normal operating condition, and wherein the step of releasing the lock includes moving the pin to the release position when the lock is in a stuck on plug condition.

* * * * *