US005821731A

United States Patent [19]

Kuki et al.

[11] **Patent Number: 5,821,731**

[45] **Date of Patent: Oct. 13, 1998**

[54] **CONNECTION SYSTEM AND CONNECTION METHOD FOR AN ELECTRIC AUTOMOTIVE VEHICLE**

[75] Inventors: **Heiji Kuki**; **Sho Miyazaki**; **Tsutomu Tanaka**; **Kunihiko Watanabe**; **Shuichi Kanagawa**, all of Yokkaichi; **Tomohiro Keishi**, Osaka; **Hiroshige Deguchi**, Osaka; **Shuji Arisaka**, Osaka, all of Japan

[73] Assignee: **Sumitomo Wiring Systems, Ltd.**, Japan

[21] Appl. No.: **791,110**

[22] Filed: **Jan. 30, 1997**

[30] **Foreign Application Priority Data**

Jan. 30, 1996	[JP]	Japan	8-014032
Feb. 2, 1996	[JP]	Japan	8-017486
Apr. 3, 1996	[JP]	Japan	8-081750
Jul. 22, 1996	[JP]	Japan	8-192187

[51] **Int. Cl.**[6] **H02J 7/00**

[52] **U.S. Cl.** **320/108**; 320/109

[58] **Field of Search** 320/108, 109

[56] **References Cited**

U.S. PATENT DOCUMENTS

4,347,472	8/1982	Lemelson	320/109
5,216,402	6/1993	Carosa .	
5,272,431	12/1993	Nee .	
5,341,083	8/1994	Klontz et al.	320/108
5,461,298	10/1995	Lara et al.	320/109
5,498,948	3/1996	Bruni et al. .	
5,523,666	6/1996	Hoelzl et al.	320/109
5,614,808	3/1997	Konoya et al.	320/109
5,617,003	4/1997	Odachi et al.	320/108
5,654,621	8/1997	Seelig	320/108

FOREIGN PATENT DOCUMENTS

0 586 315	3/1994	European Pat. Off. .
60-24539	6/1985	Japan .
WO 94/09544	4/1994	WIPO .
WO 94/28560	12/1994	WIPO .
WO 95/22191	8/1995	WIPO .

OTHER PUBLICATIONS

Patent Abstracts of Japan—vol. 7, No. 163 (M–229), 16 Jul. 1983 & JP 58 069404.

Patent Abstracts of Japan—vol. 18, No. 663 (M–1723), 14 Dec. 1994 & JP 06 261423.

Patent Abstracts of Japan—vol. 18, No. 157 (E–1058), 19 Apr. 1991 & JP 03 027732.

Patent Abstracts of Japan—vol. 16, No. 245 (M–1260), 4 Jun. 1992 & JP 04 054805.

"Hands Free Electric Vehicle Charging System"—No. 338, Jun. 1992—p. 517.

"Hands Free Electric Vehicle Charging System"'No. 338, Jun. 1992—p. 482.

Primary Examiner—Peter S. Wong
Assistant Examiner—K. Shin
Attorney, Agent, or Firm—Anthony J. Casella; Gerald E. Hespos; Ludomir A. Budzyn

[57] **ABSTRACT**

A connection system and connection method for easily charging an electric automotive vehicle are provided. A secondary coil **20** connected with a battery **21** is provided at the bottom of a body of an electric automotive vehicle E. On the other hand, a recess A is formed in the ground of a parking lot, and a coil moving device **30** for movably supporting a primary coil **10** is installed in the recess A. Three magnetic sensors **50** are provided on a body **40** of the coil moving device **30**. Further, power supply circuits **13***a* to **13***e* provided in an external power supply equipment **11** at the back of the parking lot and a main controller **12** supply power to the primary coil **10**, magnetic sensors **50** and coil moving device **30** and control them. In order to charge the battery **21**, the vehicle E is parked, straddling the recess A, and the secondary coil **20** is excited. Then, the magnetic sensors **50** detect the position of the secondary coil **20**, and the main controller **12** drives the coil moving device **30** to guide the primary coil **10** to a position where both coils **10**, **20** are to be electromagnetically coupled.

15 Claims, 47 Drawing Sheets

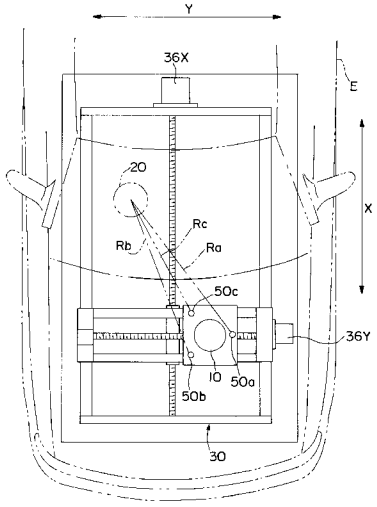

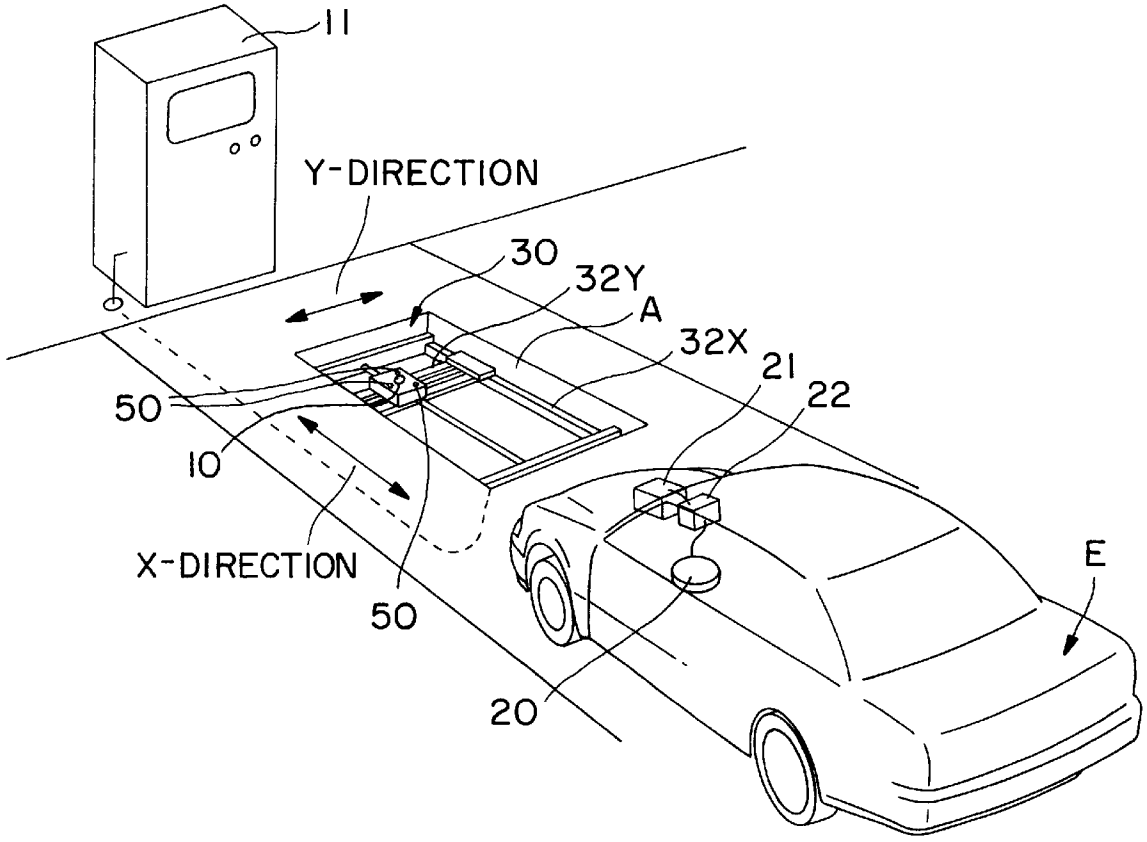

FIG. 1

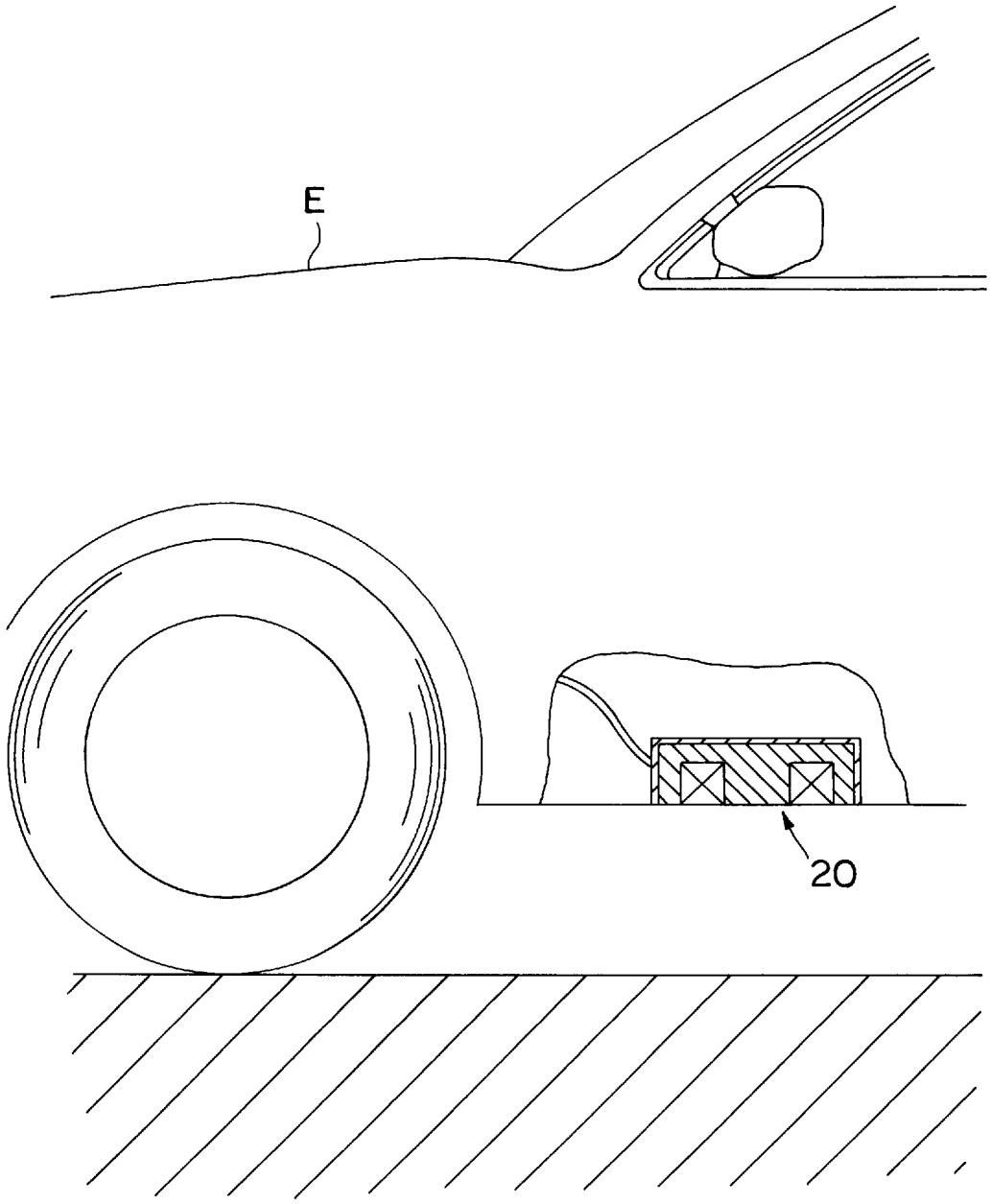

FIG. 2

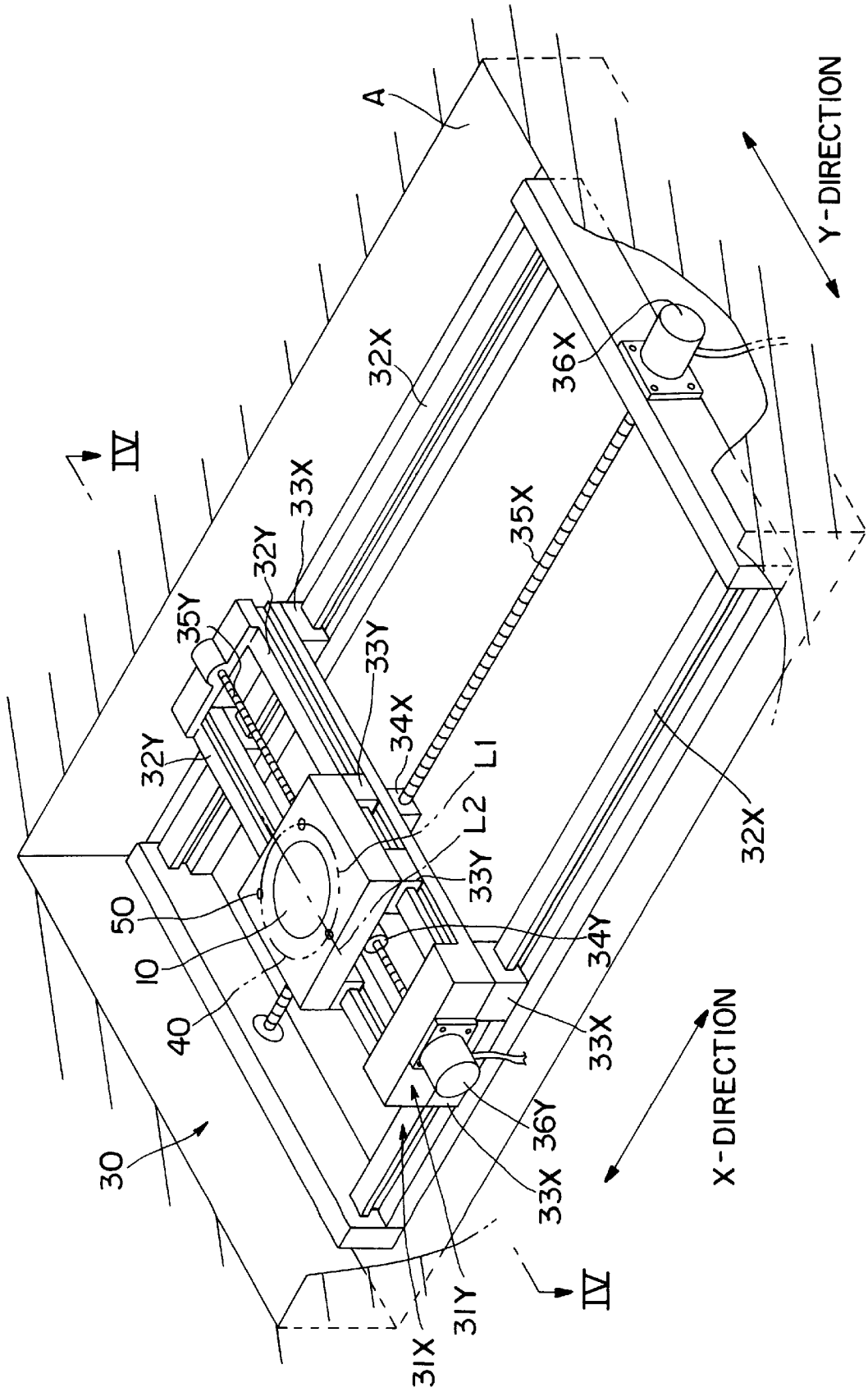
A
Y-DIRECTION
32X
36X
IV
33X
32Y
35X
35Y
33Y
34X
32Y
L1
L2
33Y
32X
50
10
40
34Y
33X
X-DIRECTION
36Y
30
33X
31Y
31X
IV

FIG. 3

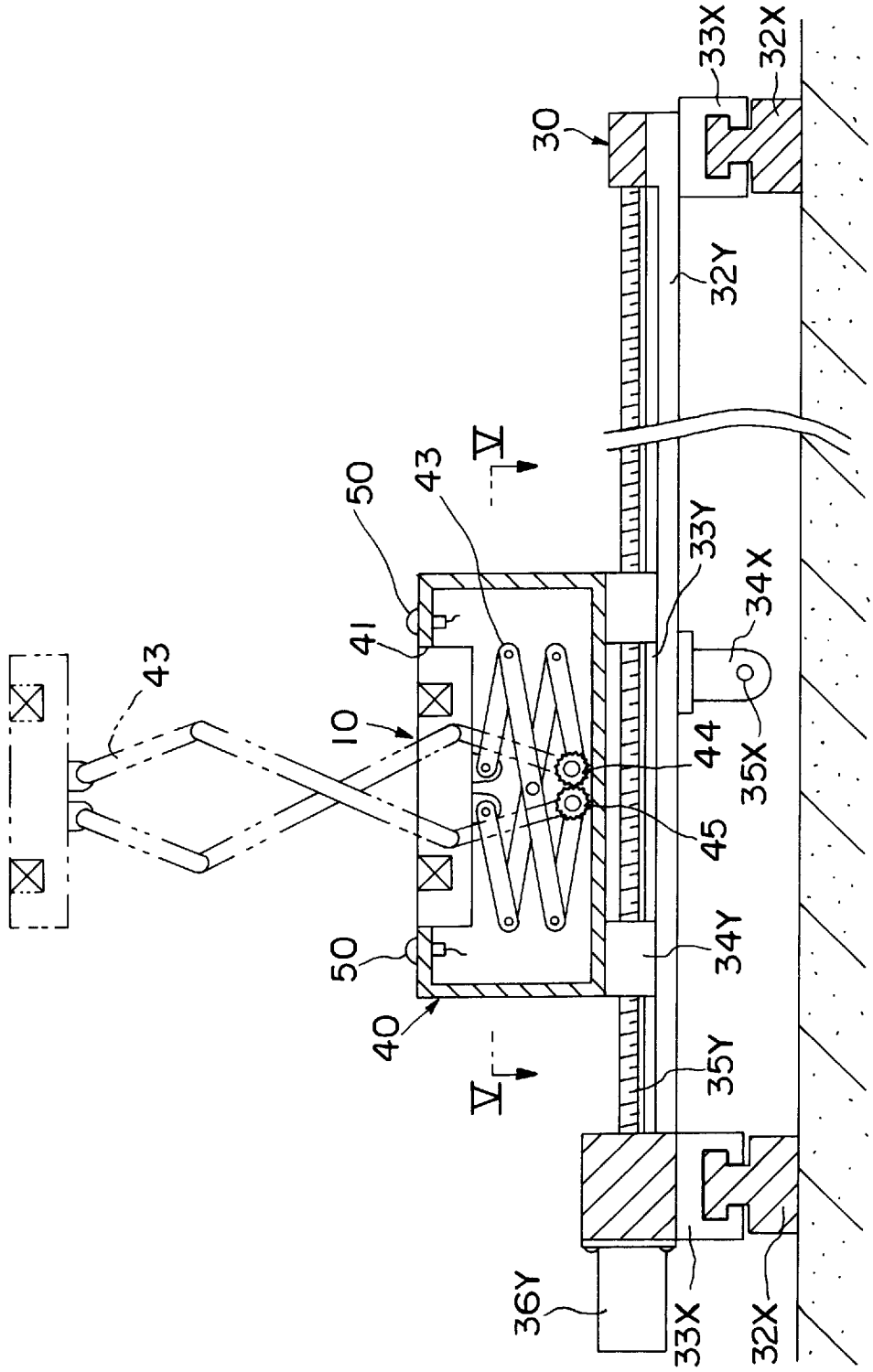
30
33X
32X
32Y
V
50
43
41
10
43
33Y
34X
44
35X
45
50
34Y
40
V
35Y
36Y
33X
32X

FIG. 4

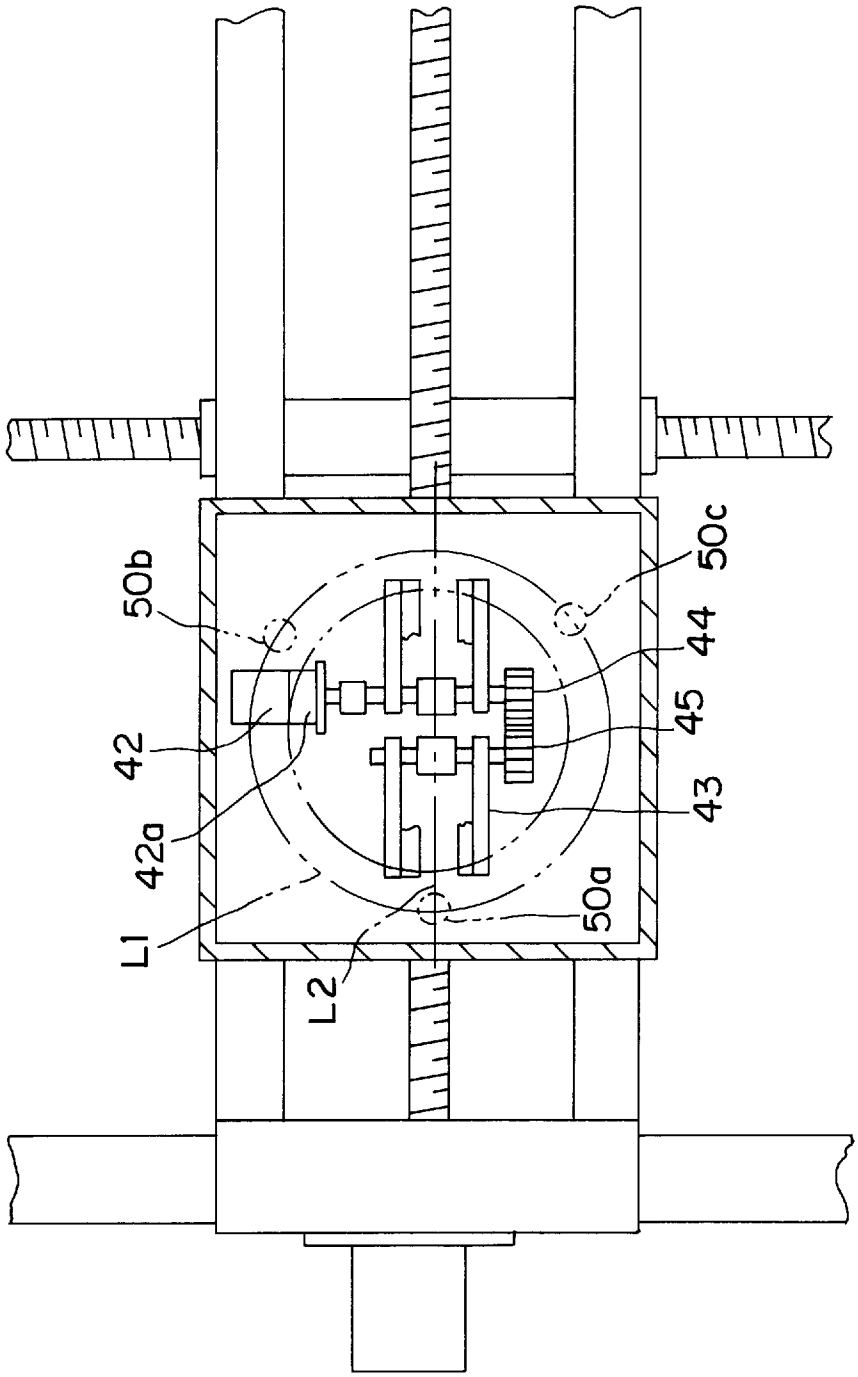

FIG. 5

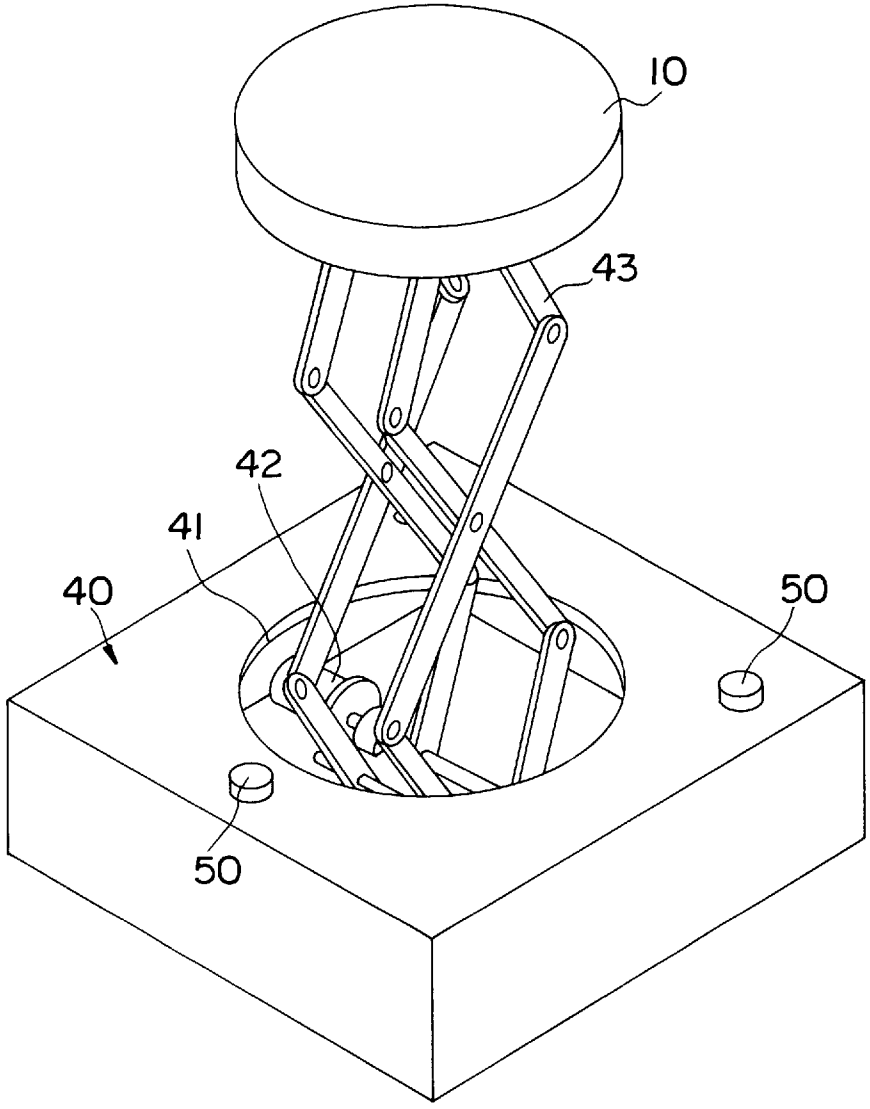

FIG. 6

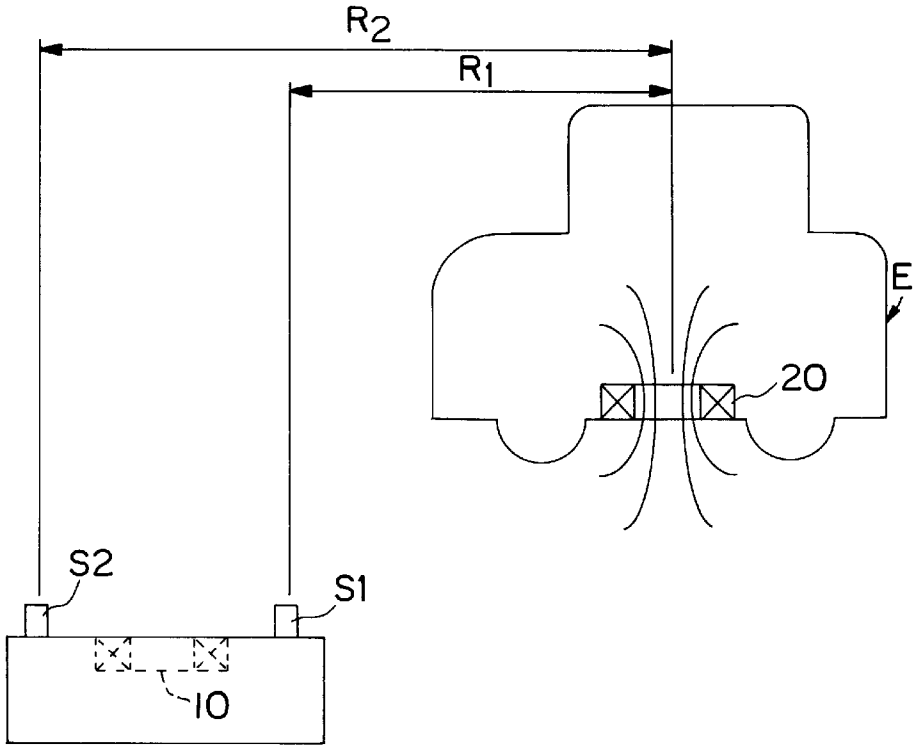

FIG. 7

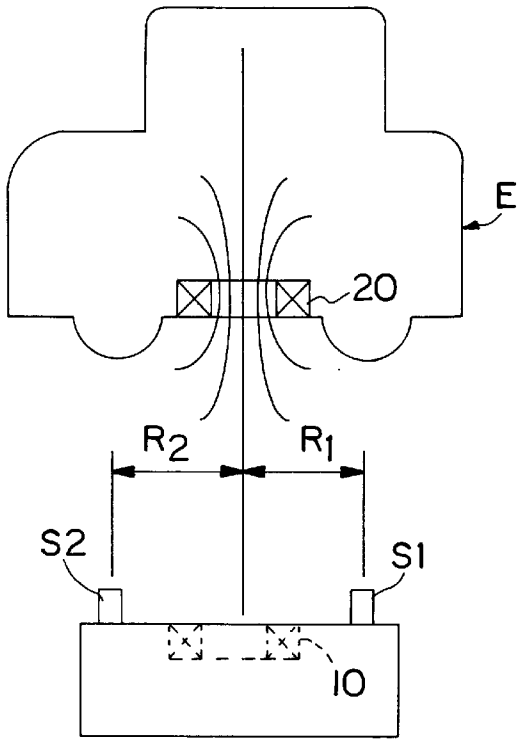

FIG. 8

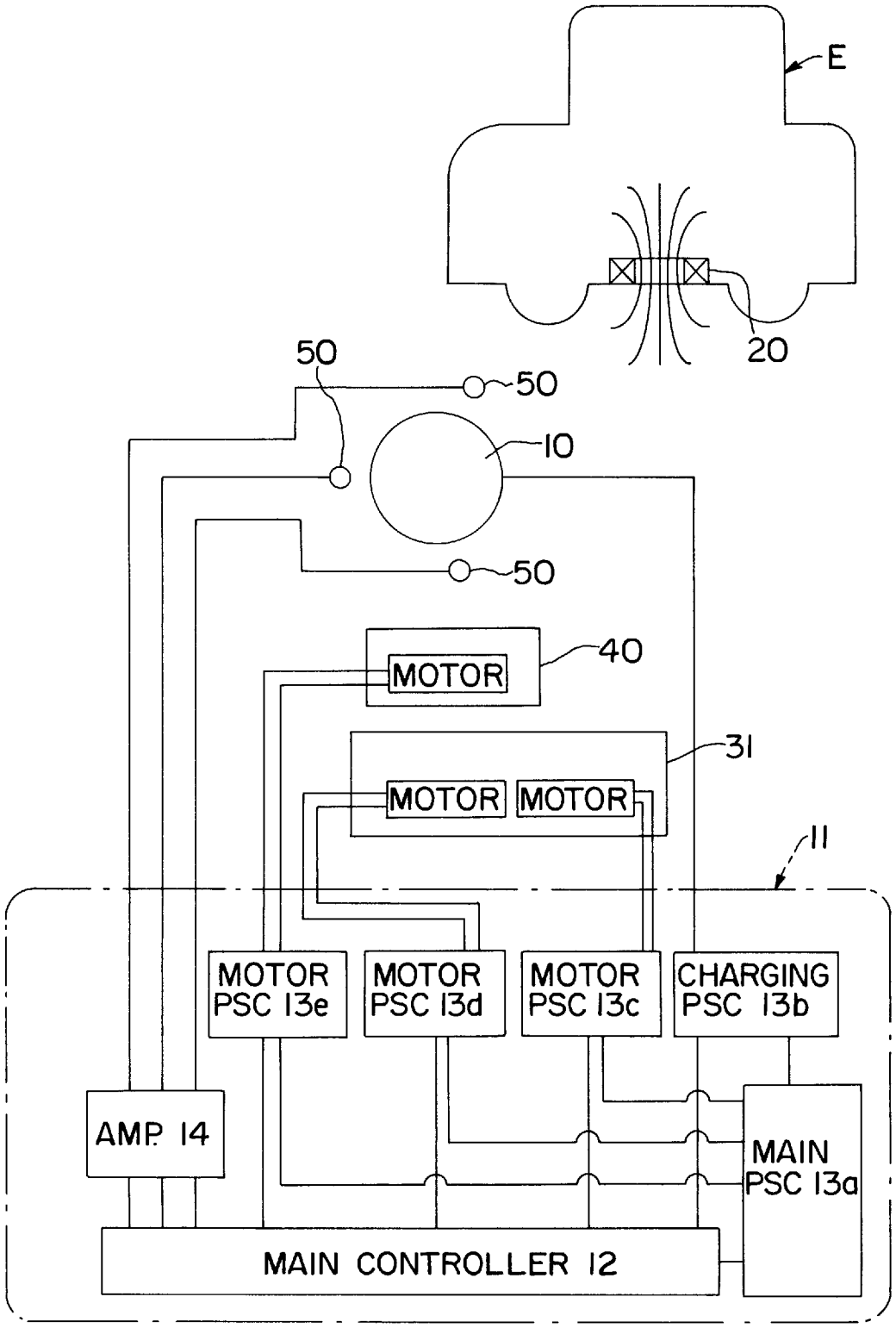
E
20
50
50
10
50
MOTOR
40
31
MOTOR
MOTOR
11
MOTOR PSC 13e
MOTOR PSC 13d
MOTOR PSC 13c
CHARGING PSC 13b
AMP. 14
MAIN PSC 13a
MAIN CONTROLLER 12

FIG. 9

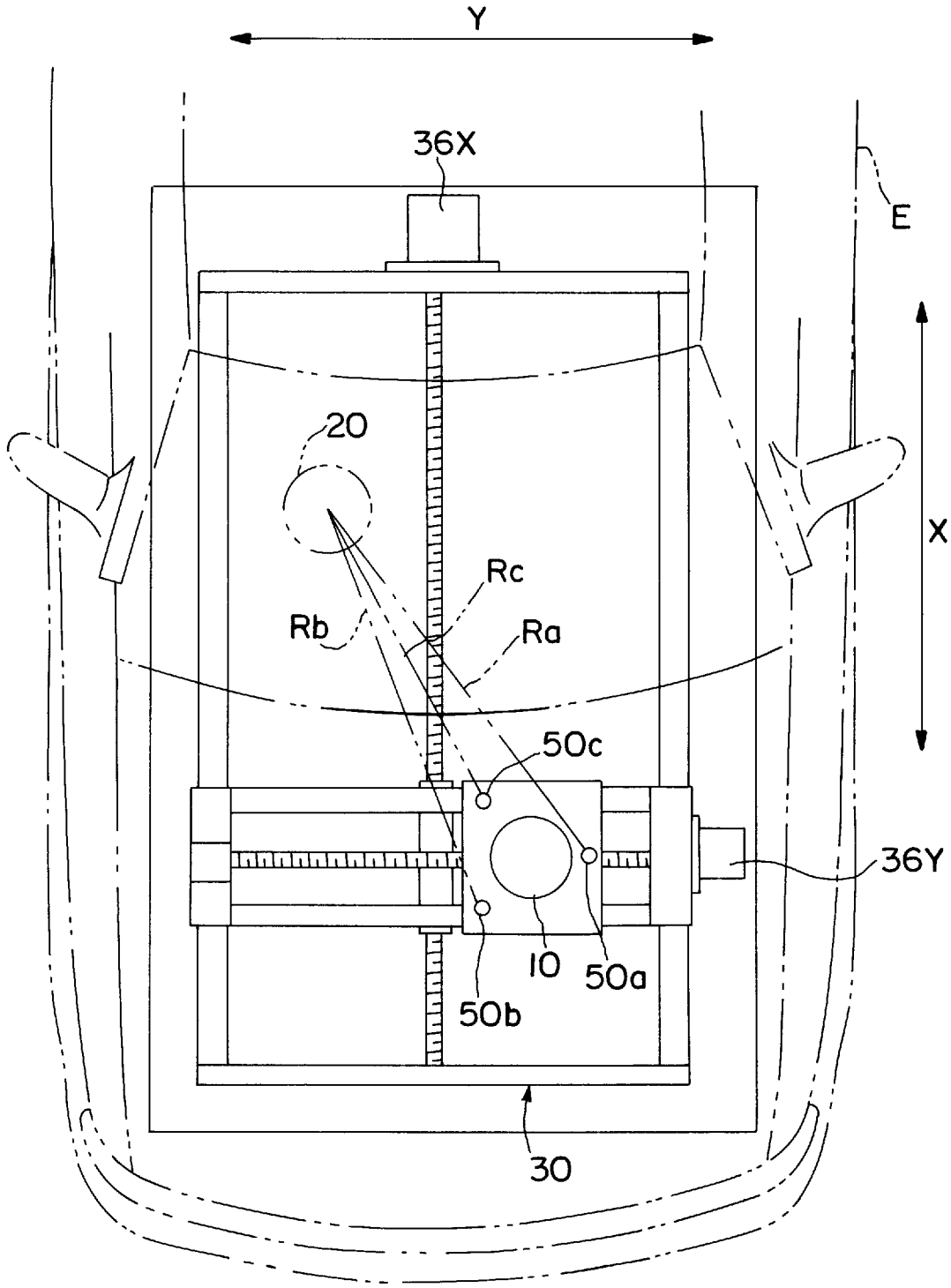

FIG. 10

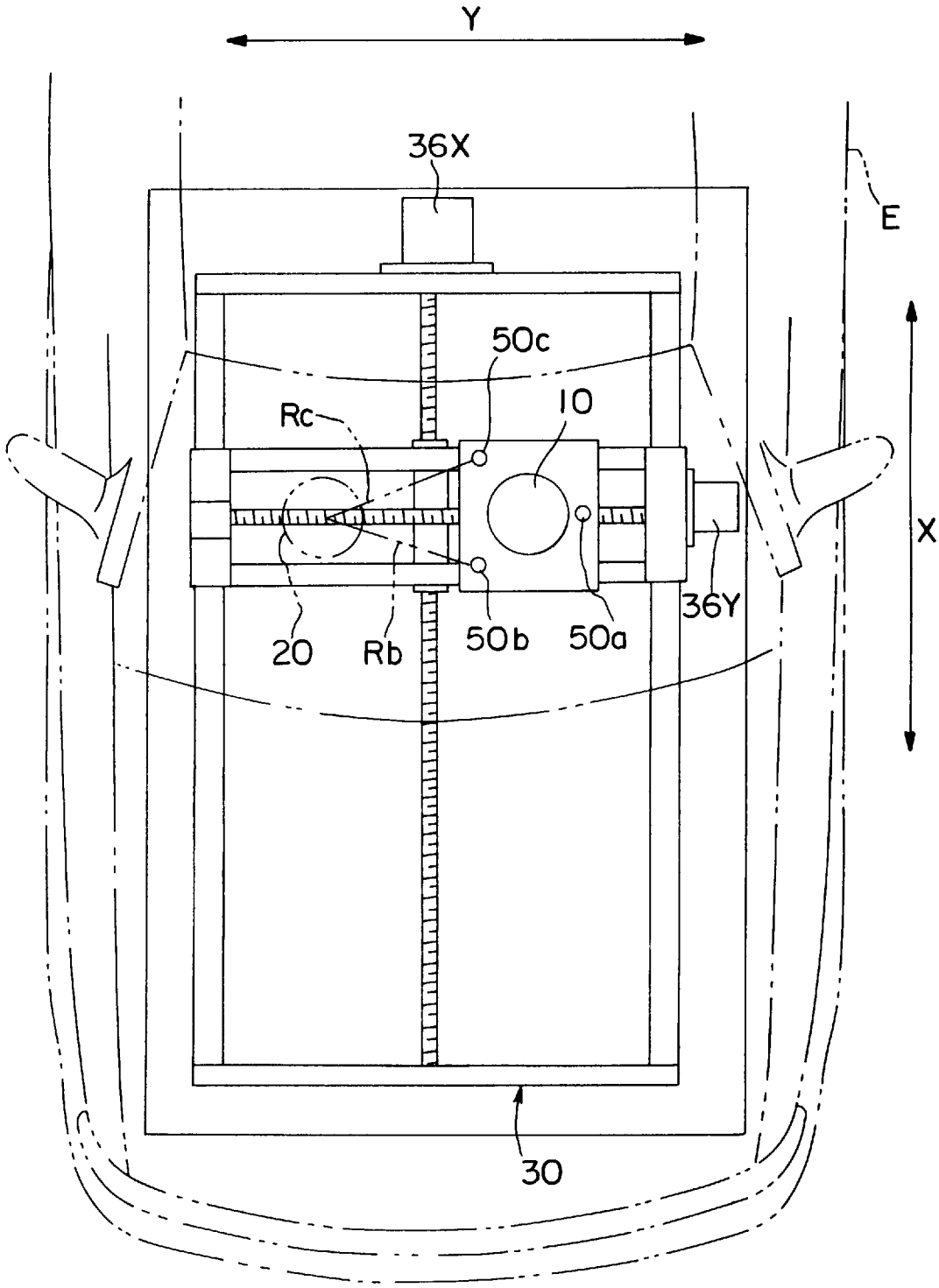

FIG. 11

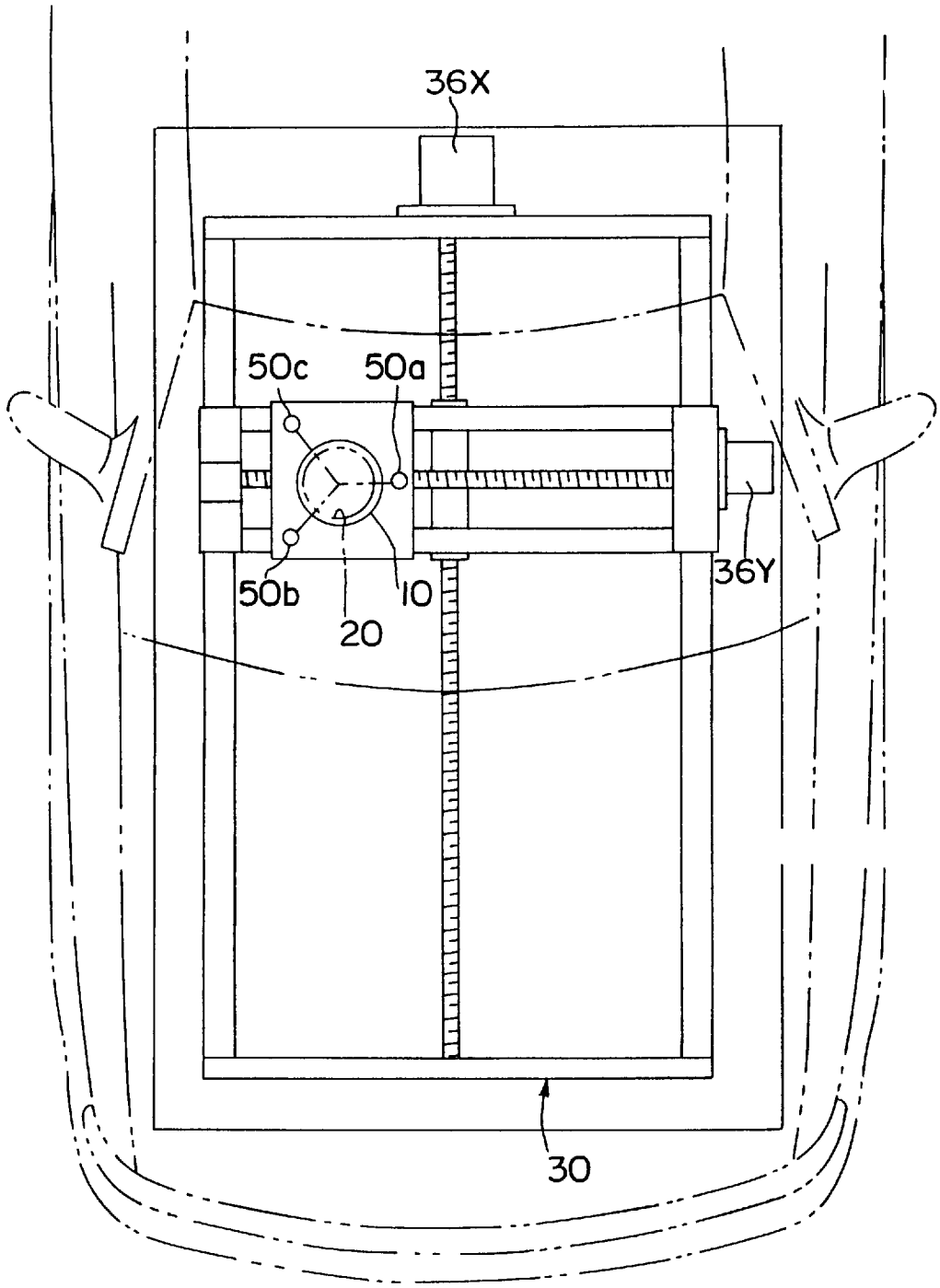

FIG. 12

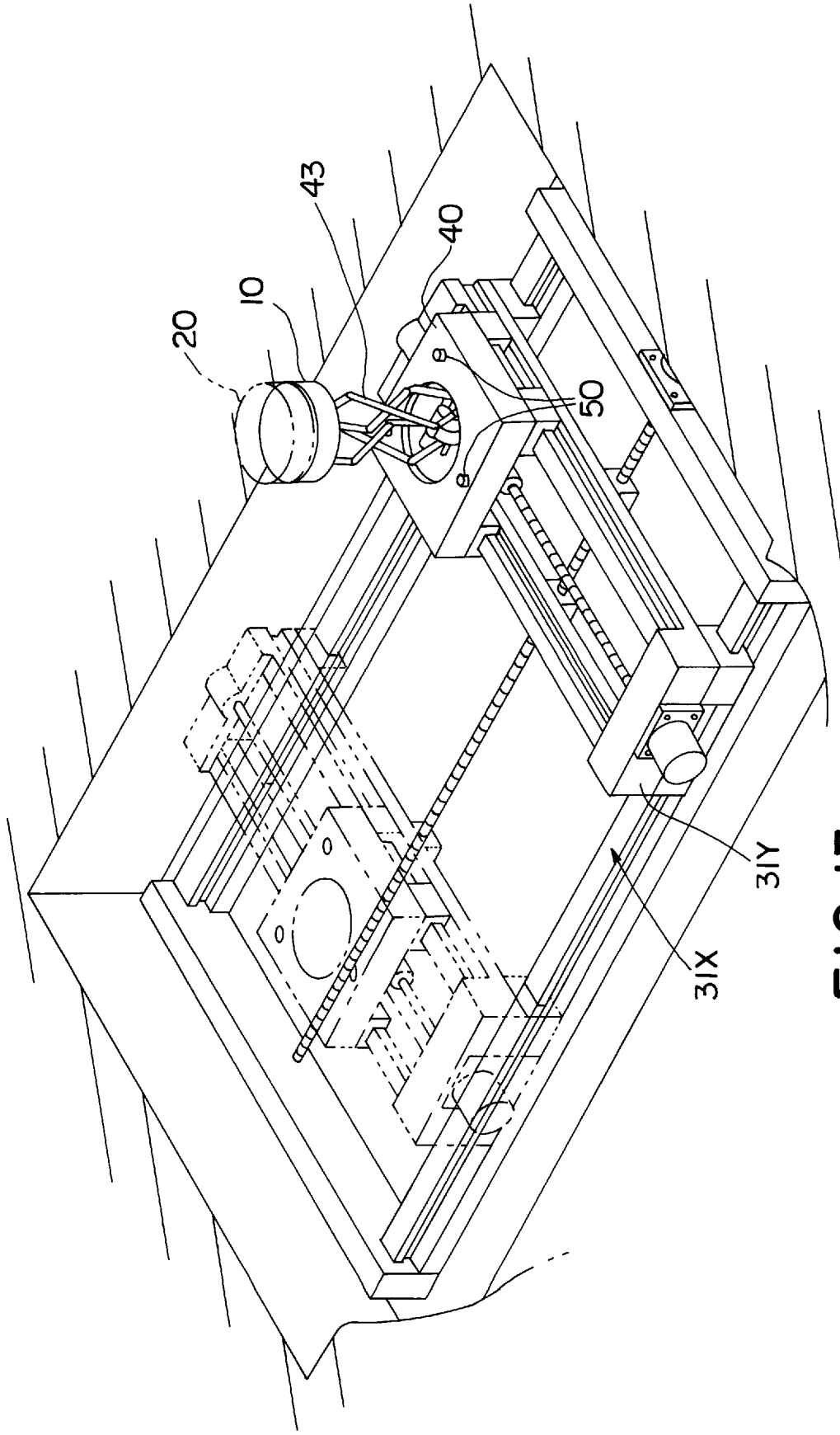

FIG. 13

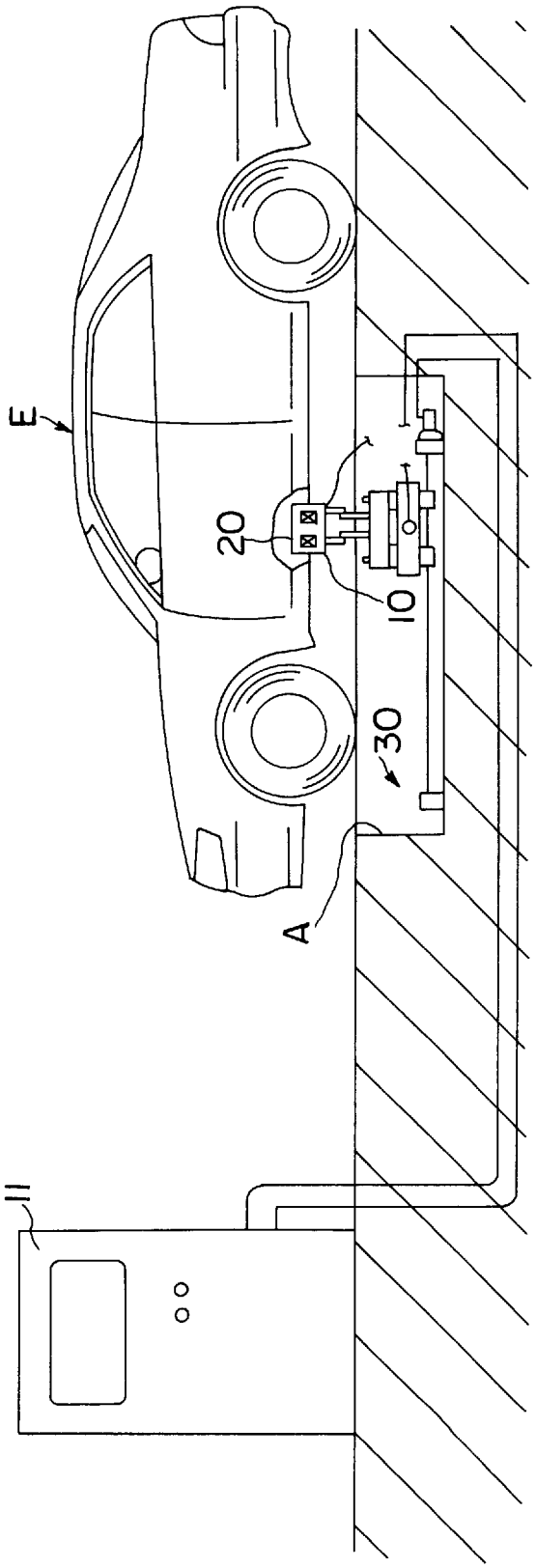

FIG. 14

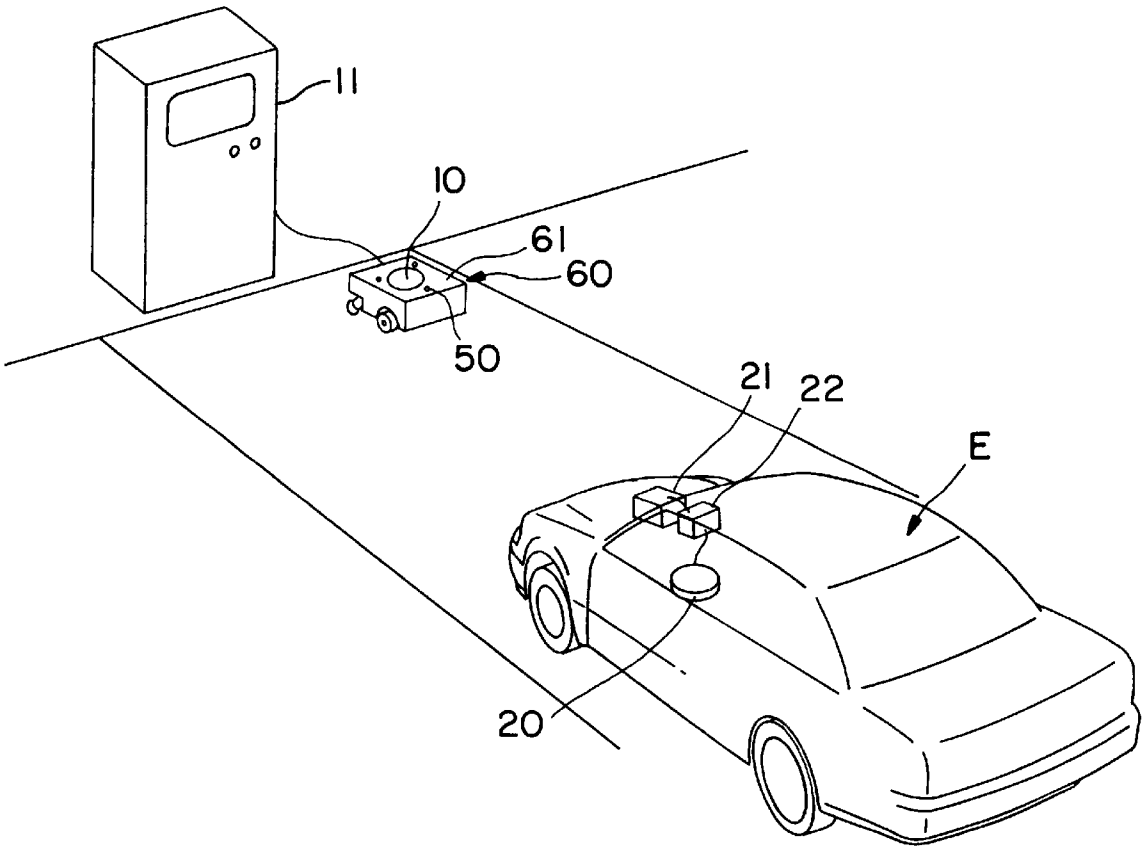

FIG. 15

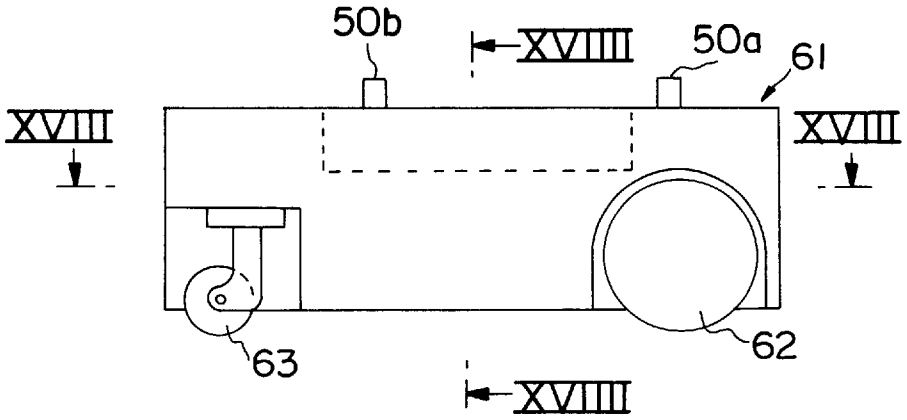
50b
XVIII
50a
61
XVIII
XVIII
63
62
XVIII

FIG. 16

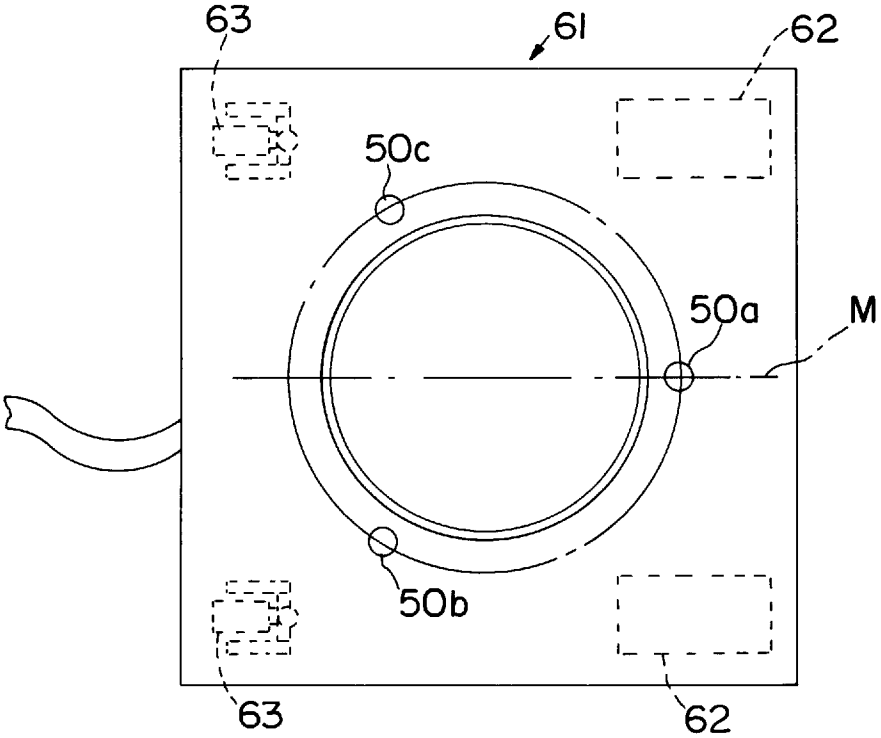
63
61
62
50c
50a
M
50b
63
62

FIG. 17

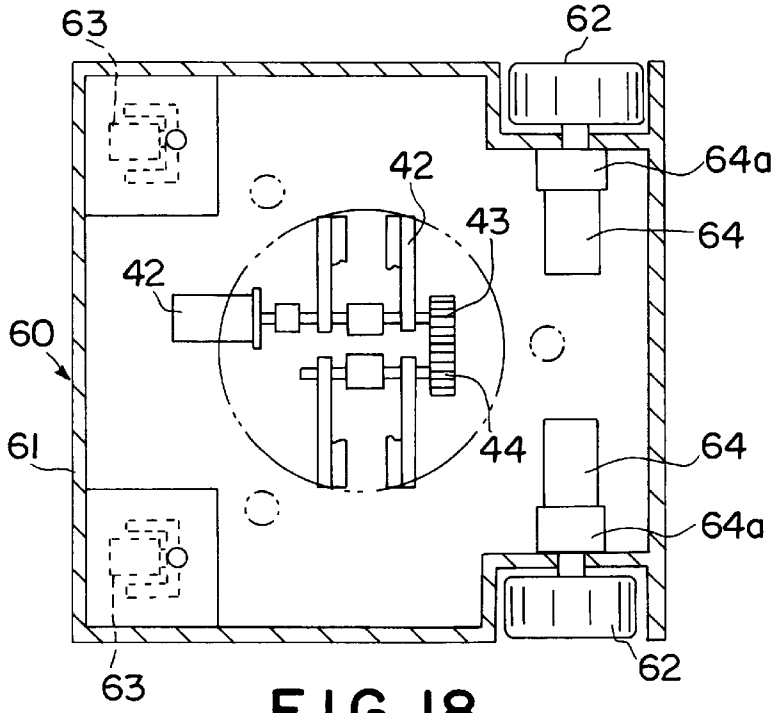
63
62
64a
42
43
64
42
60
61
44
64
64a
63
62

FIG. 18

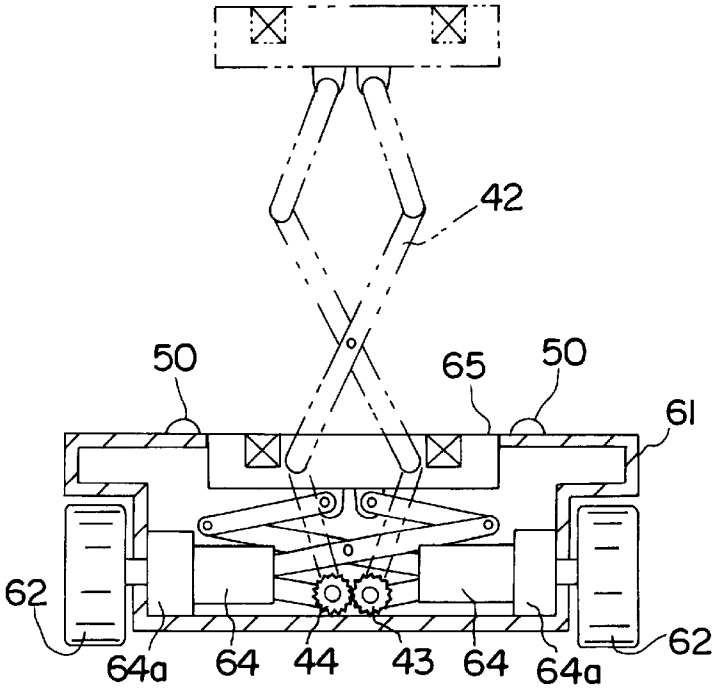
42
50
65
50
61
62
64a
64
44
43
64
64a
62

FIG. 19

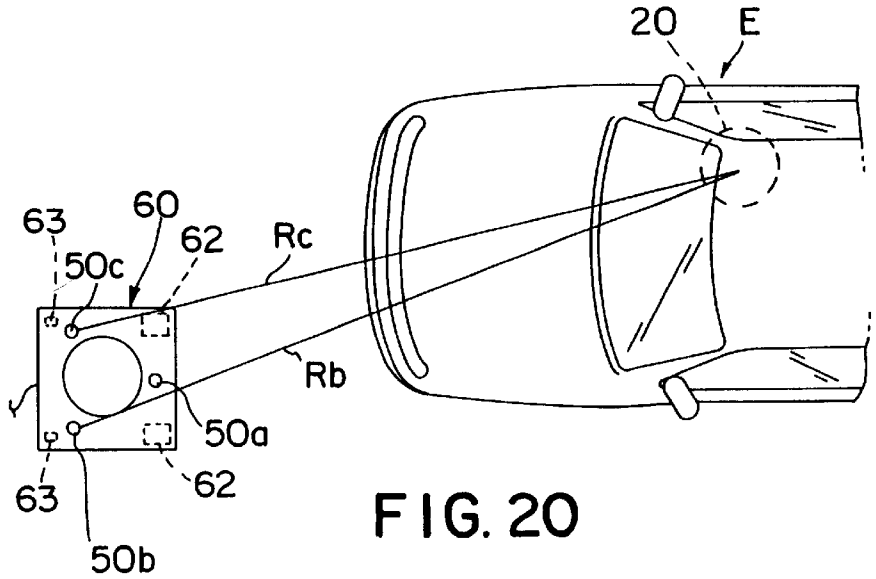

FIG. 20

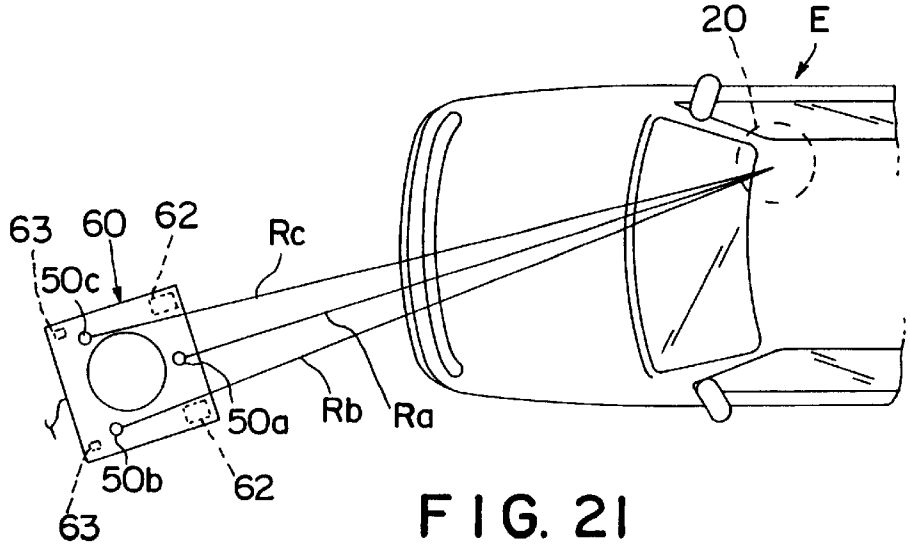

FIG. 21

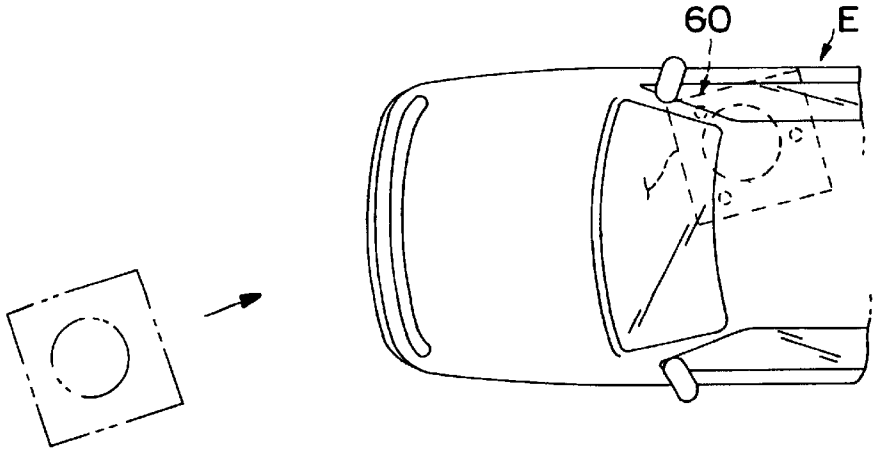

FIG. 22

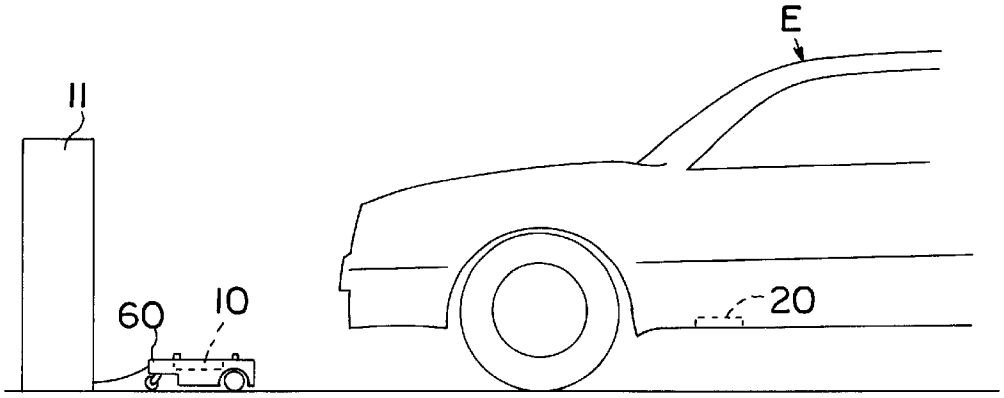

FIG. 23

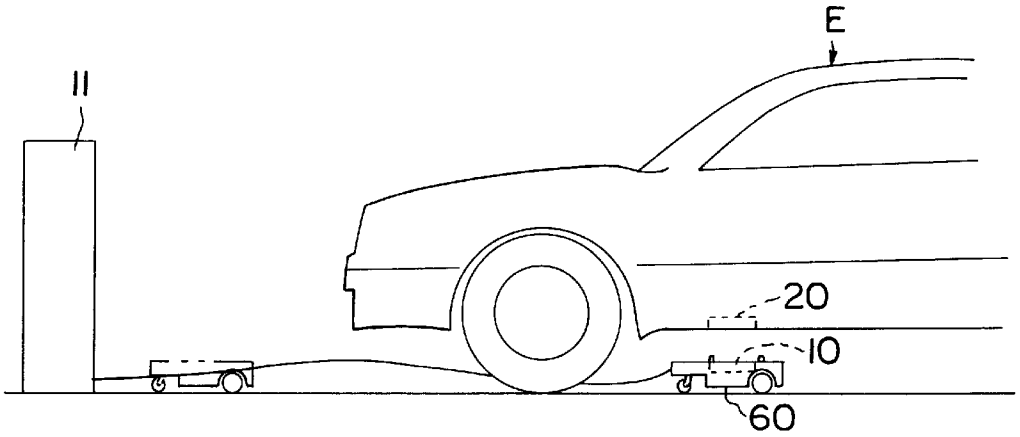

FIG. 24

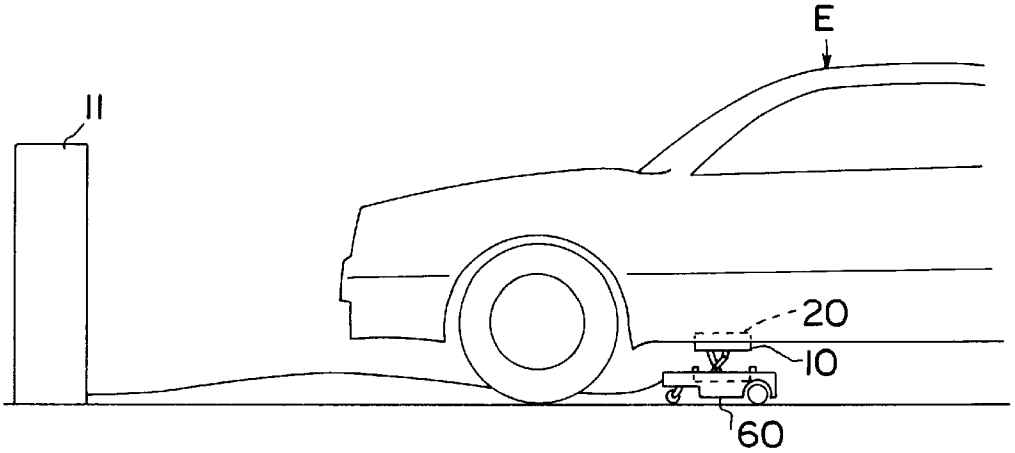

FIG. 25

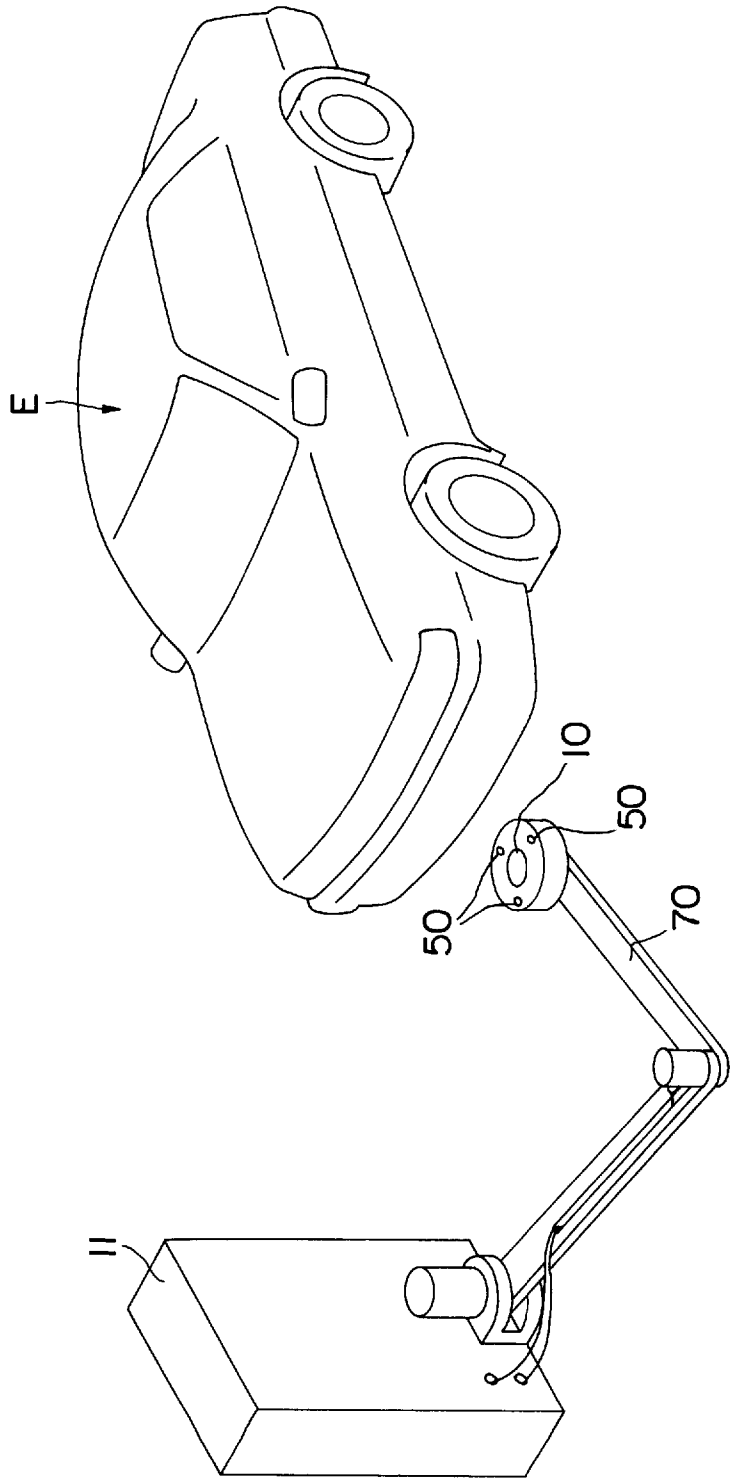

FIG. 26

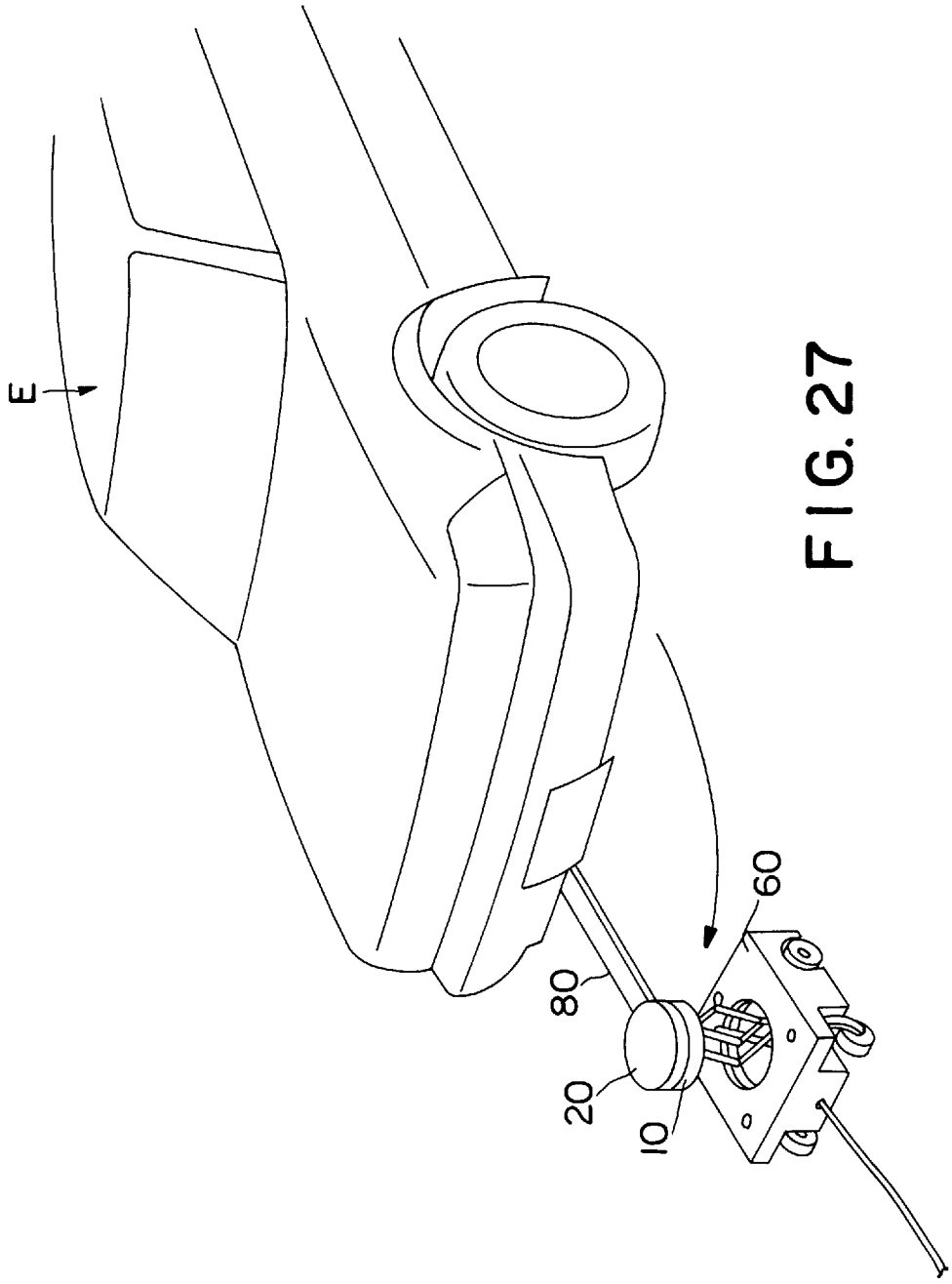

FIG. 27

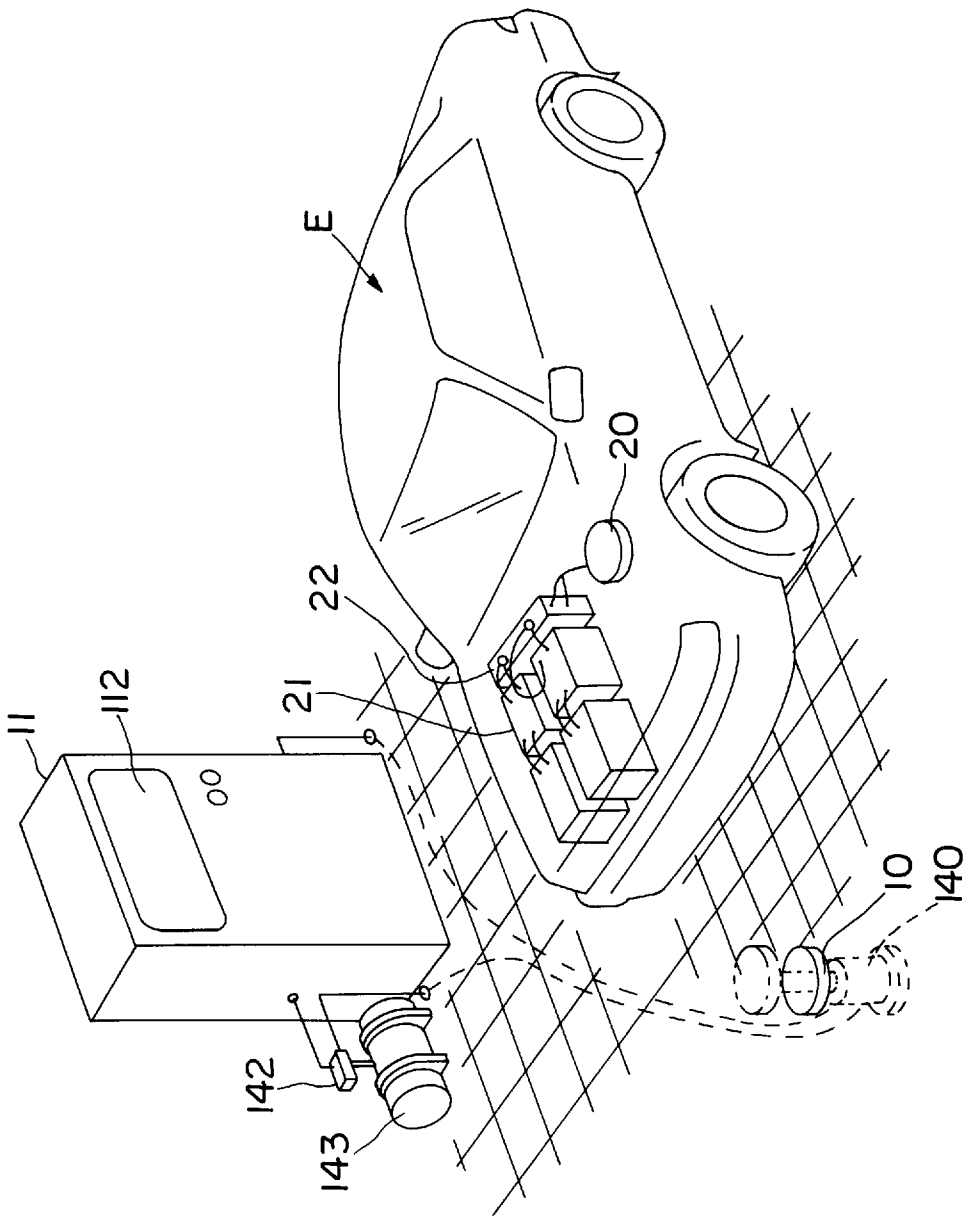

FIG. 28

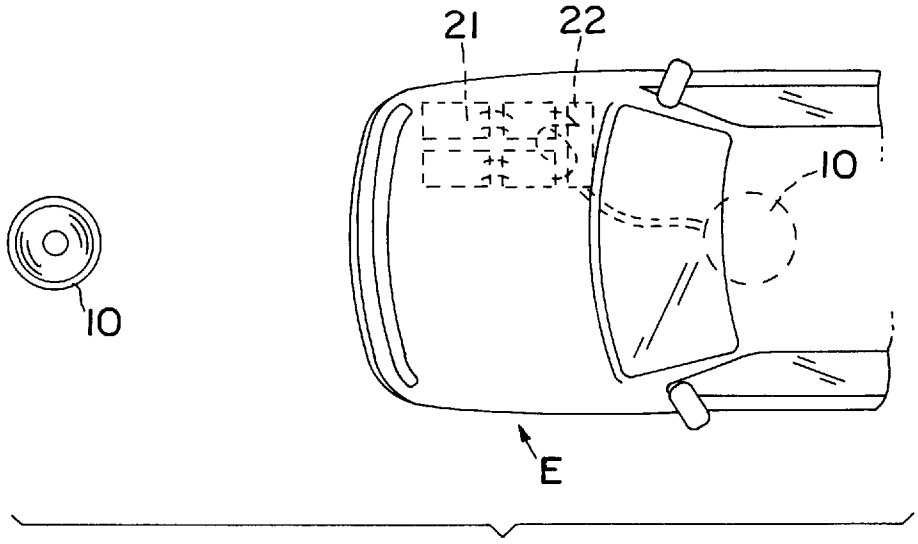

FIG. 29

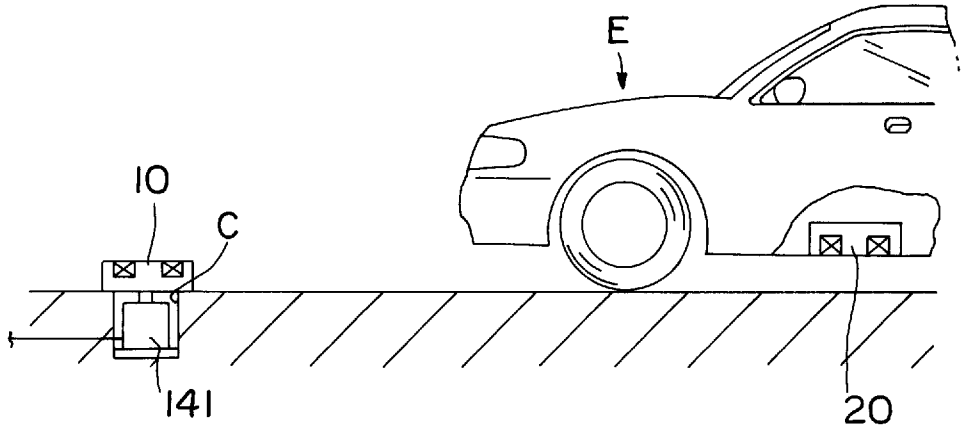

FIG. 30

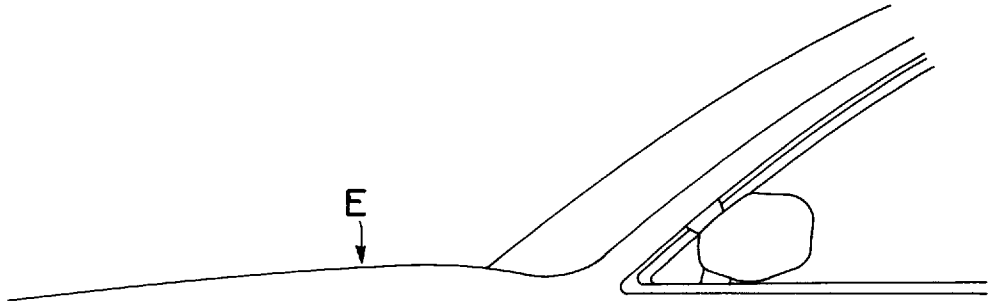

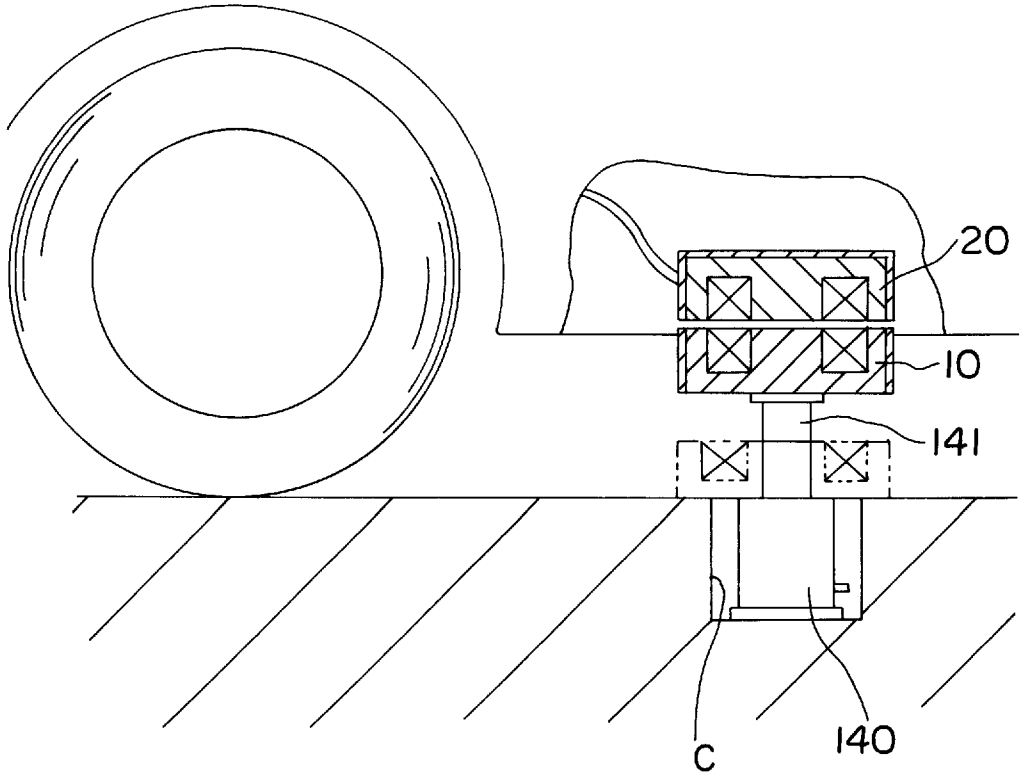

FIG. 31

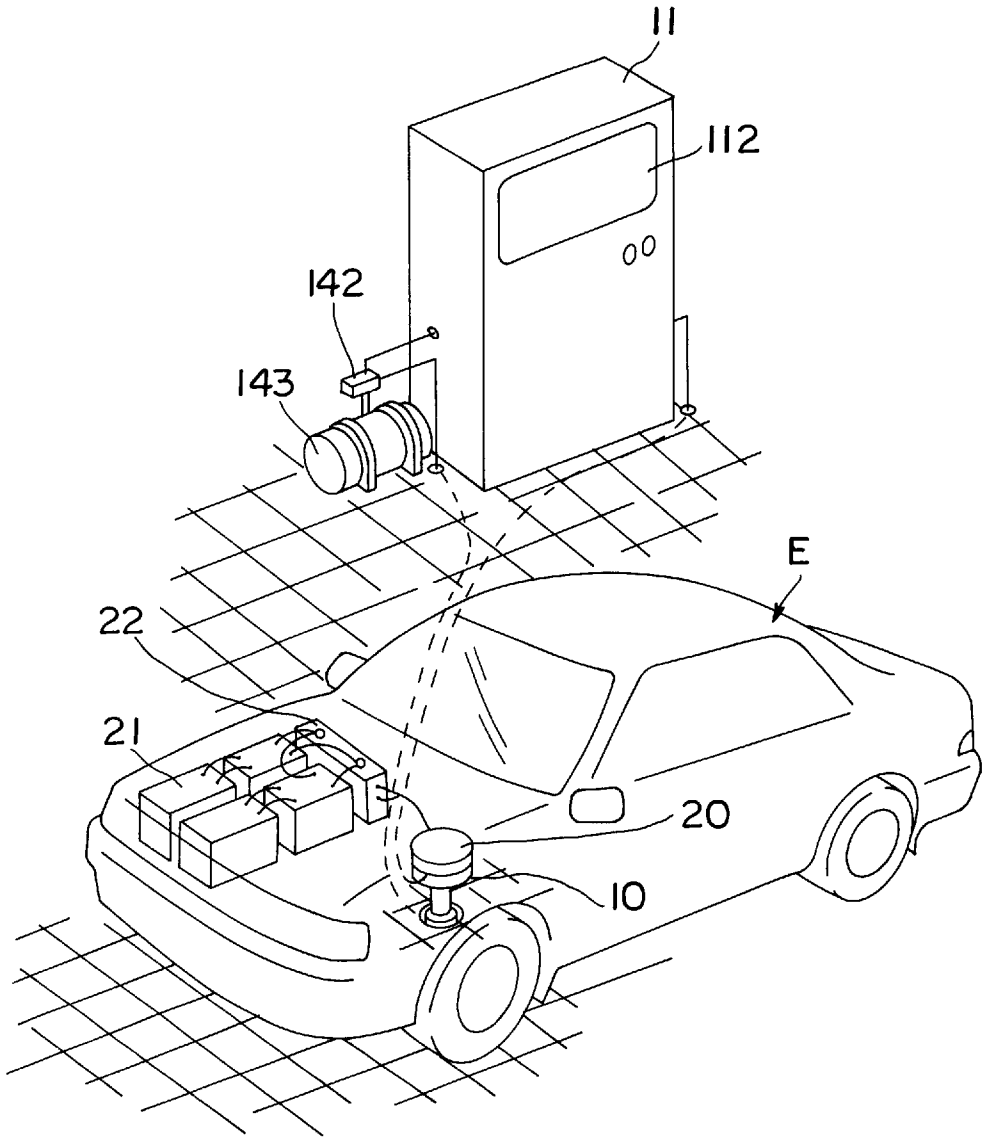

FIG. 32

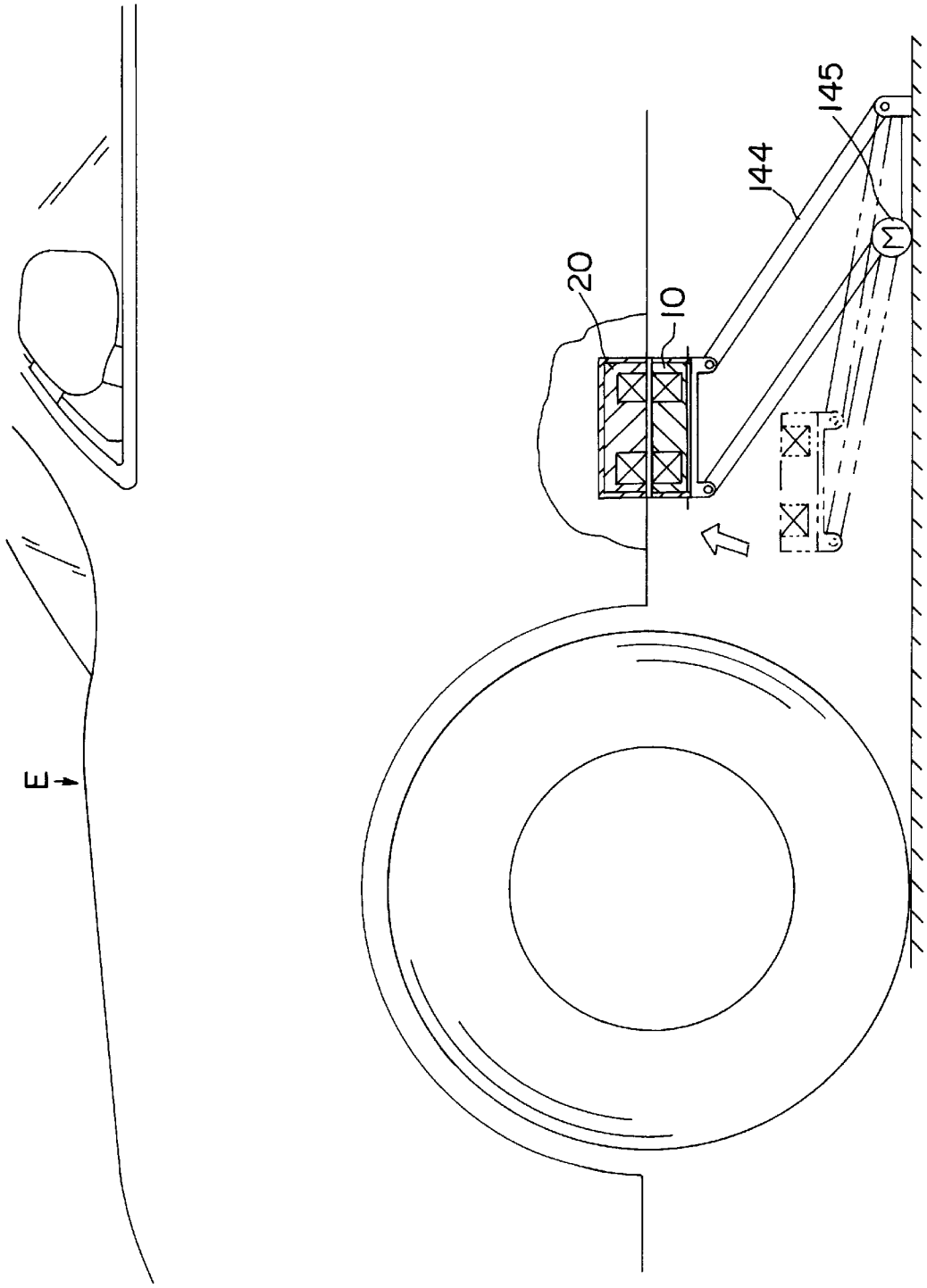

FIG. 33

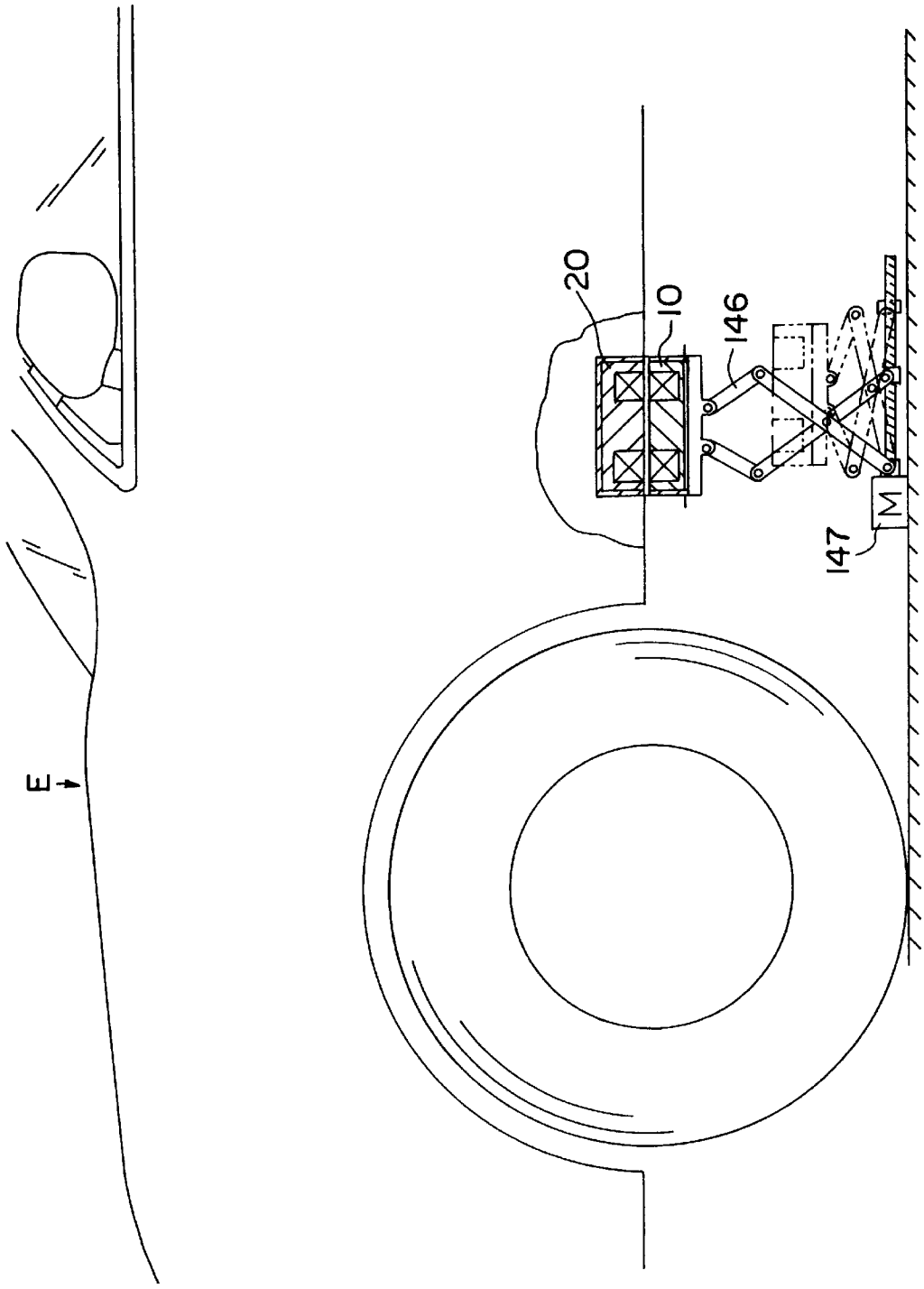

FIG. 34

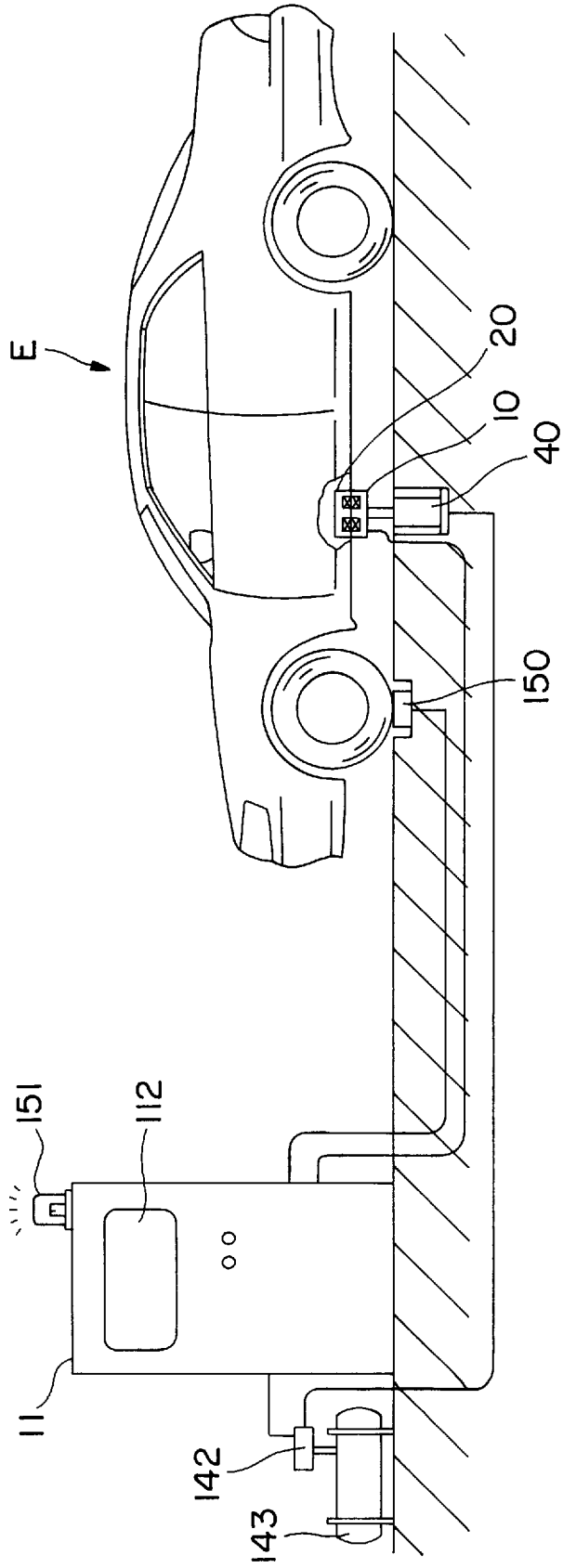

FIG. 35

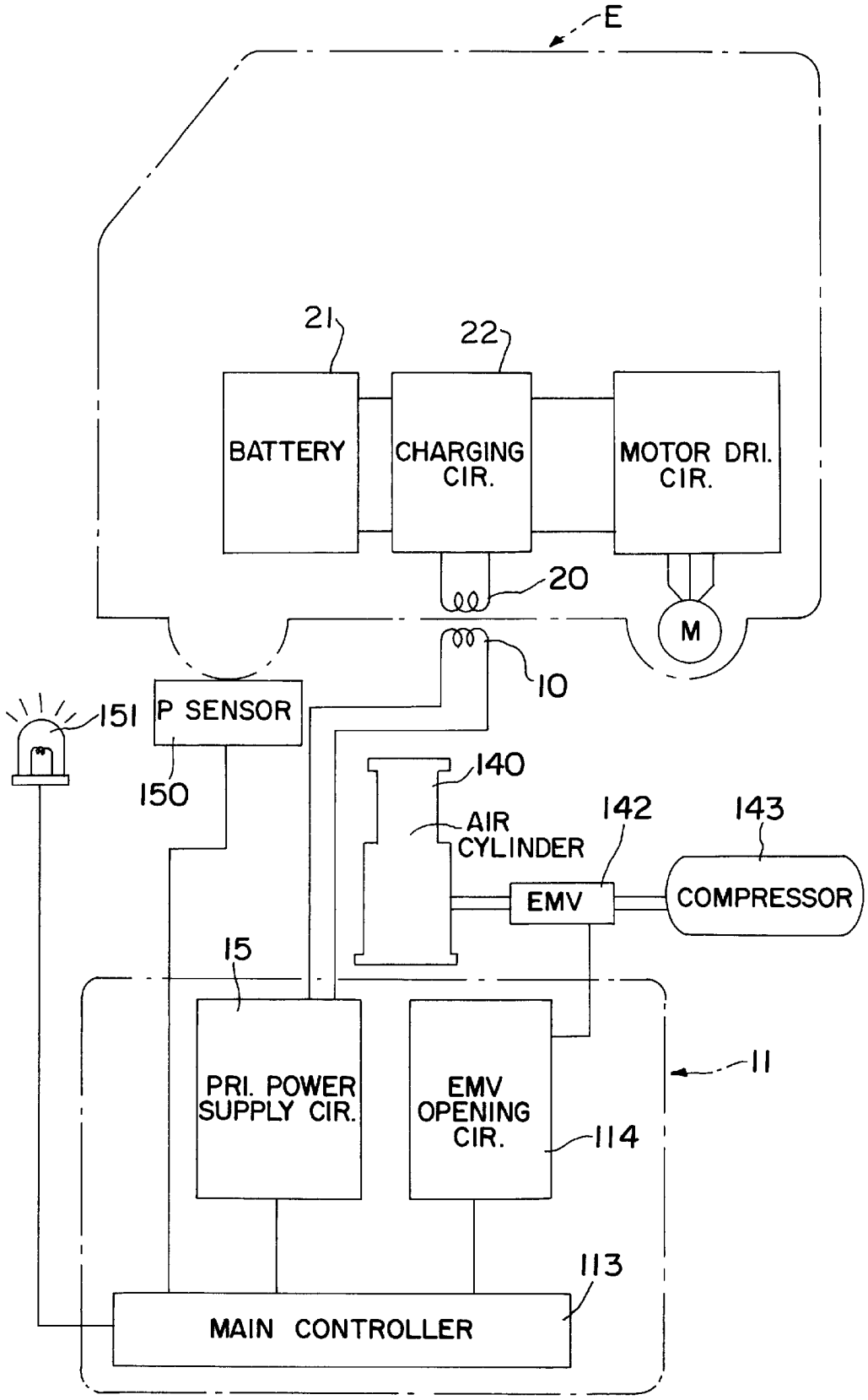
E
21
22
BATTERY
CHARGING CIR.
MOTOR DRI. CIR.
20
M
10
151
P SENSOR
150
140
AIR CYLINDER
142
143
EMV
COMPRESSOR
15
PRI. POWER SUPPLY CIR.
EMV OPENING CIR.
114
11
113
MAIN CONTROLLER

FIG. 36

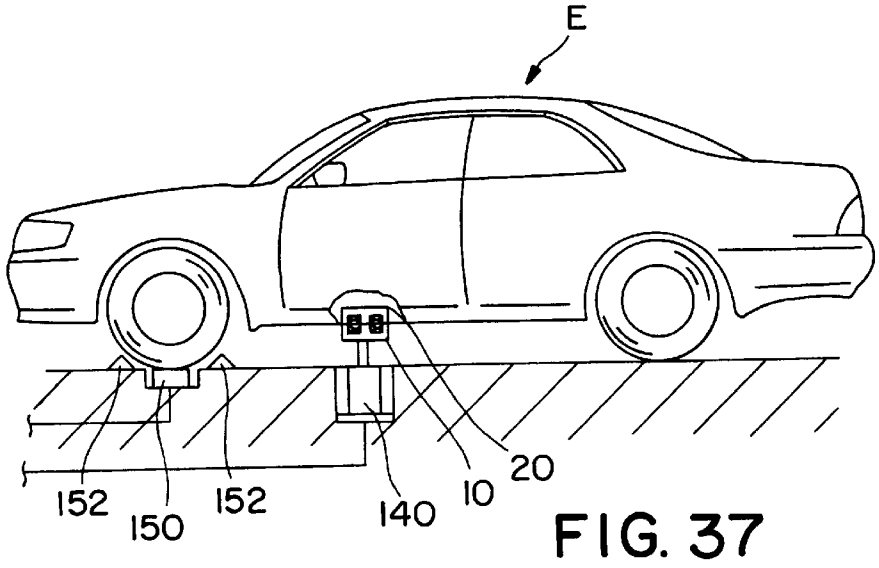

FIG. 37

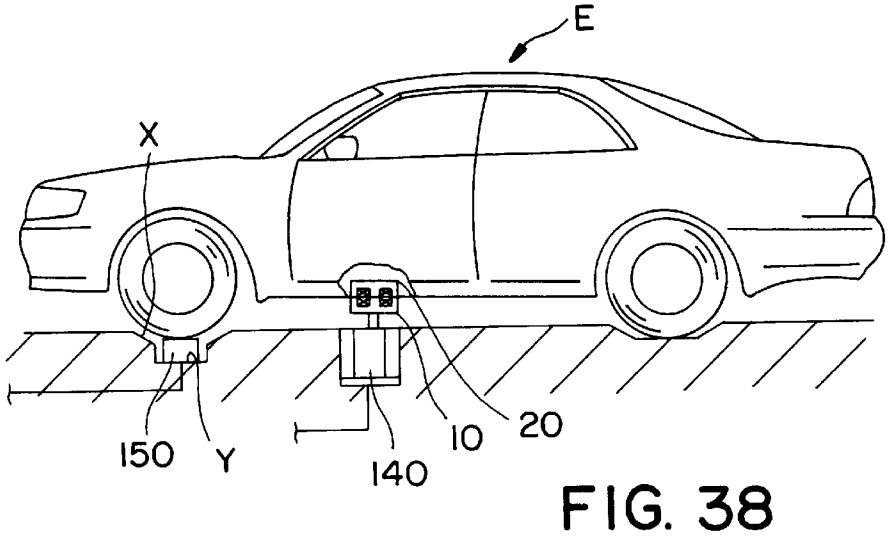

FIG. 38

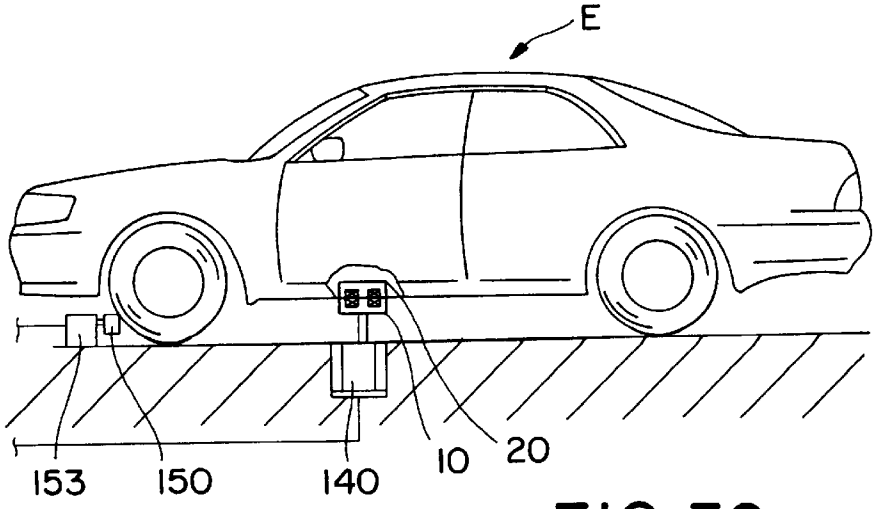

FIG. 39

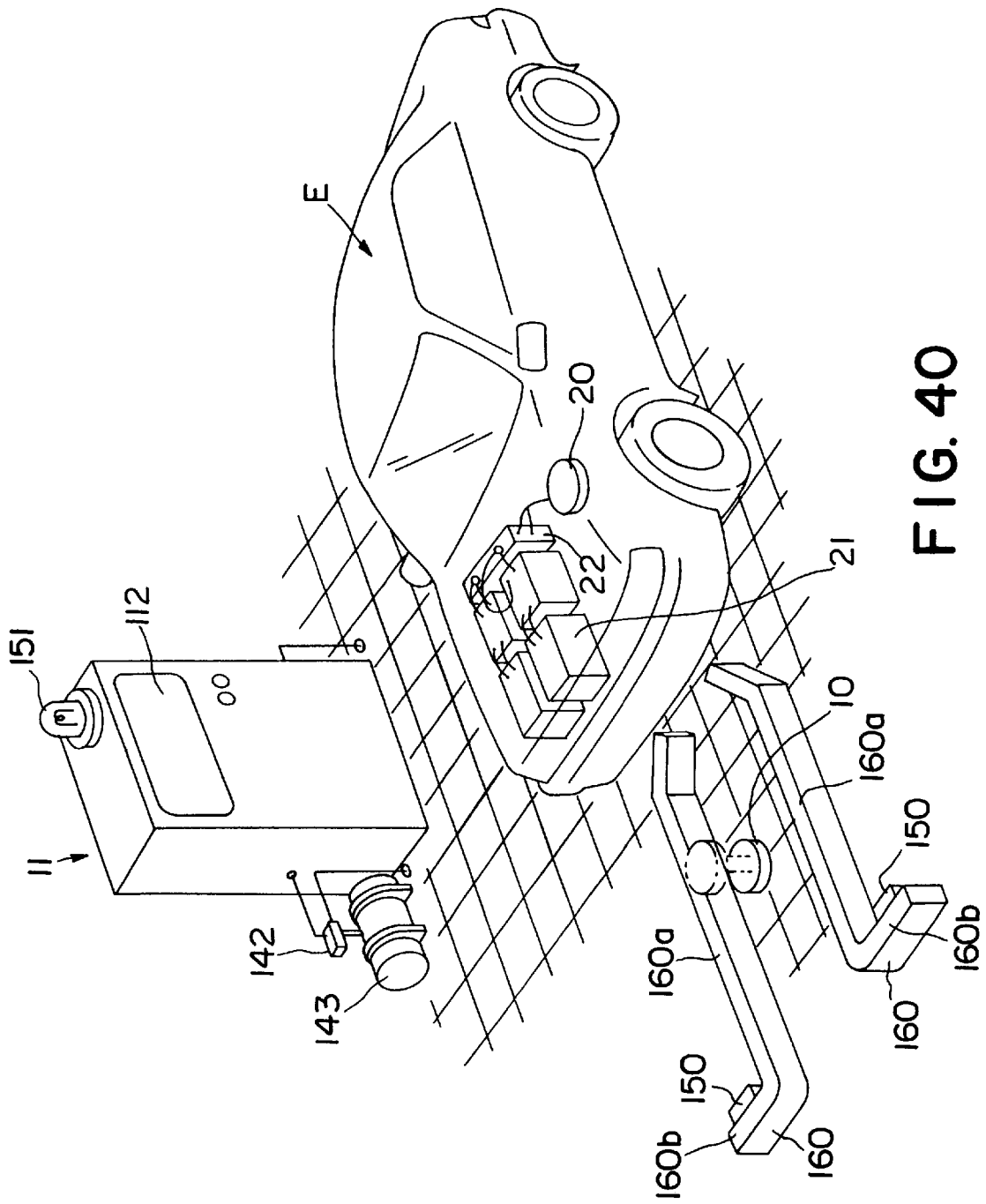
E
20
22
21
151
112
11
142
143
10
160a
150
160b
160
160a
150
160b
160

FIG. 40

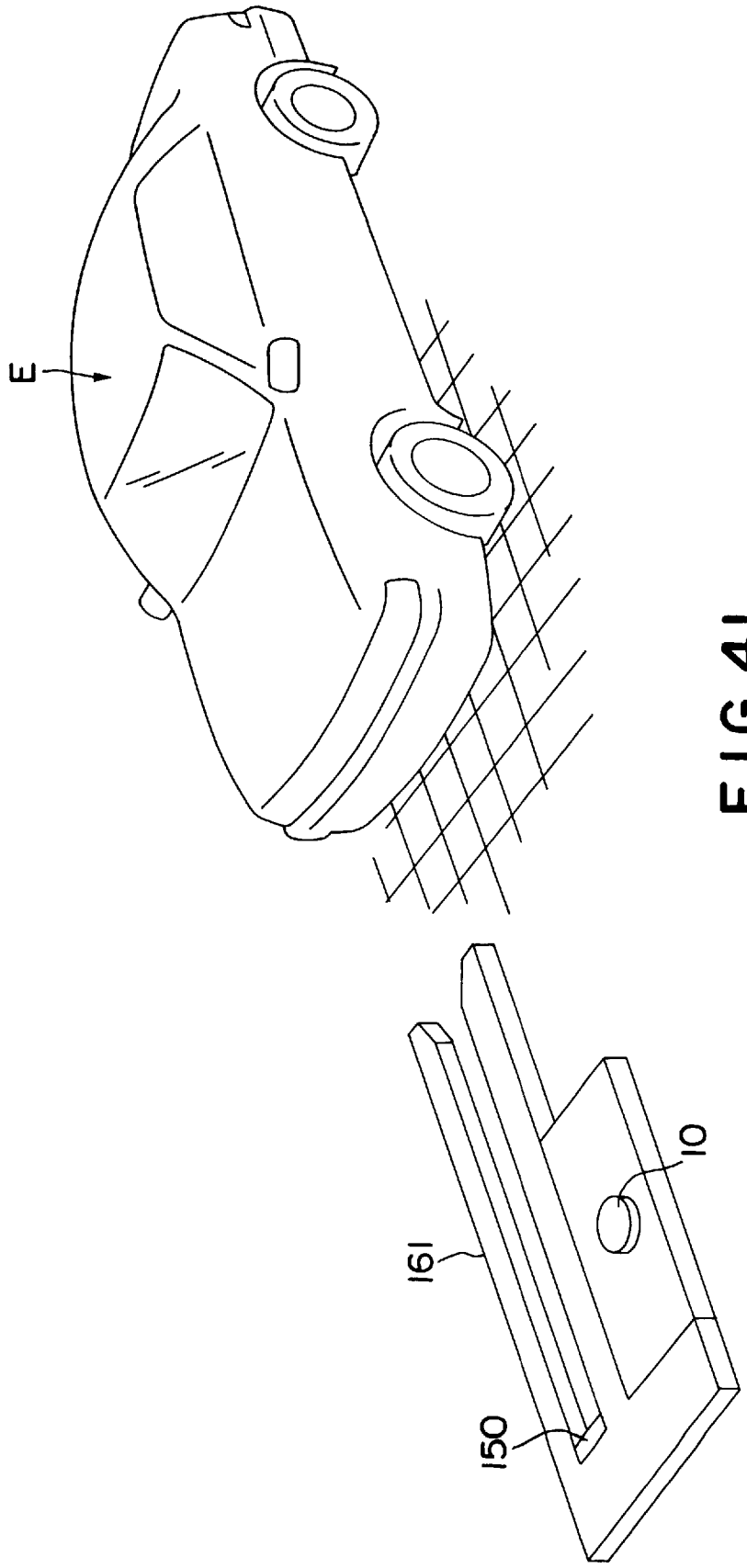

FIG. 41

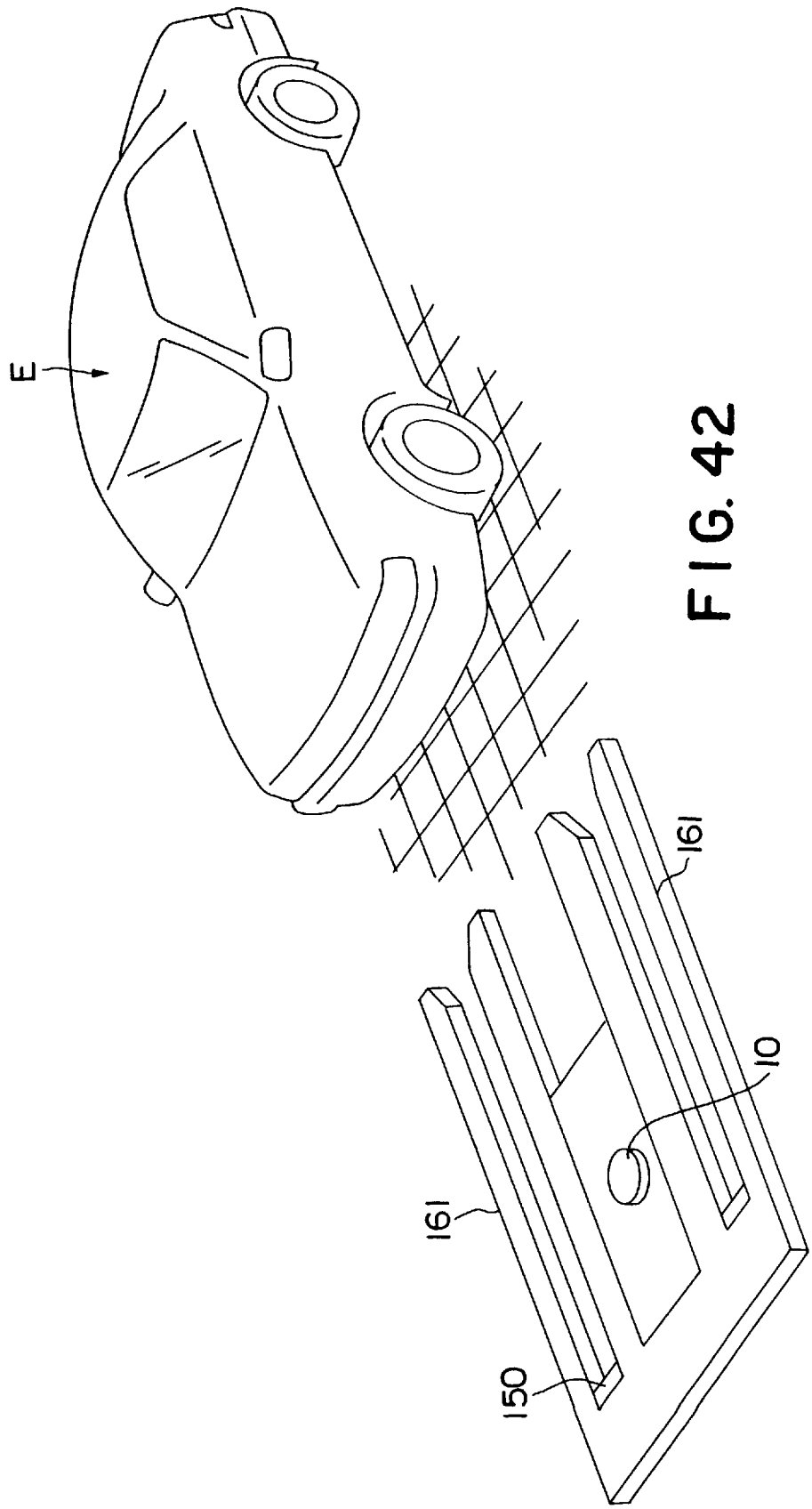

FIG. 42

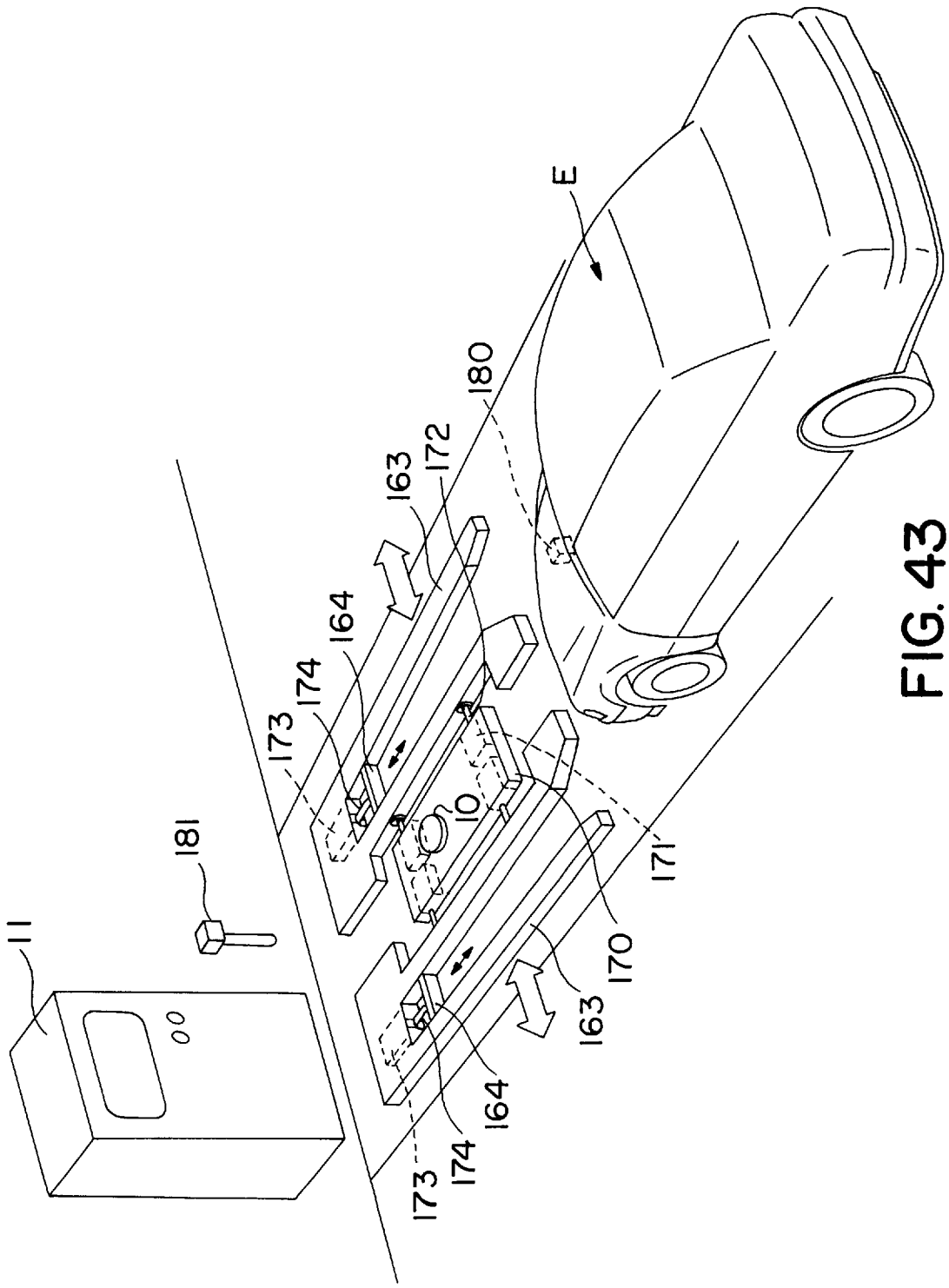

FIG. 43

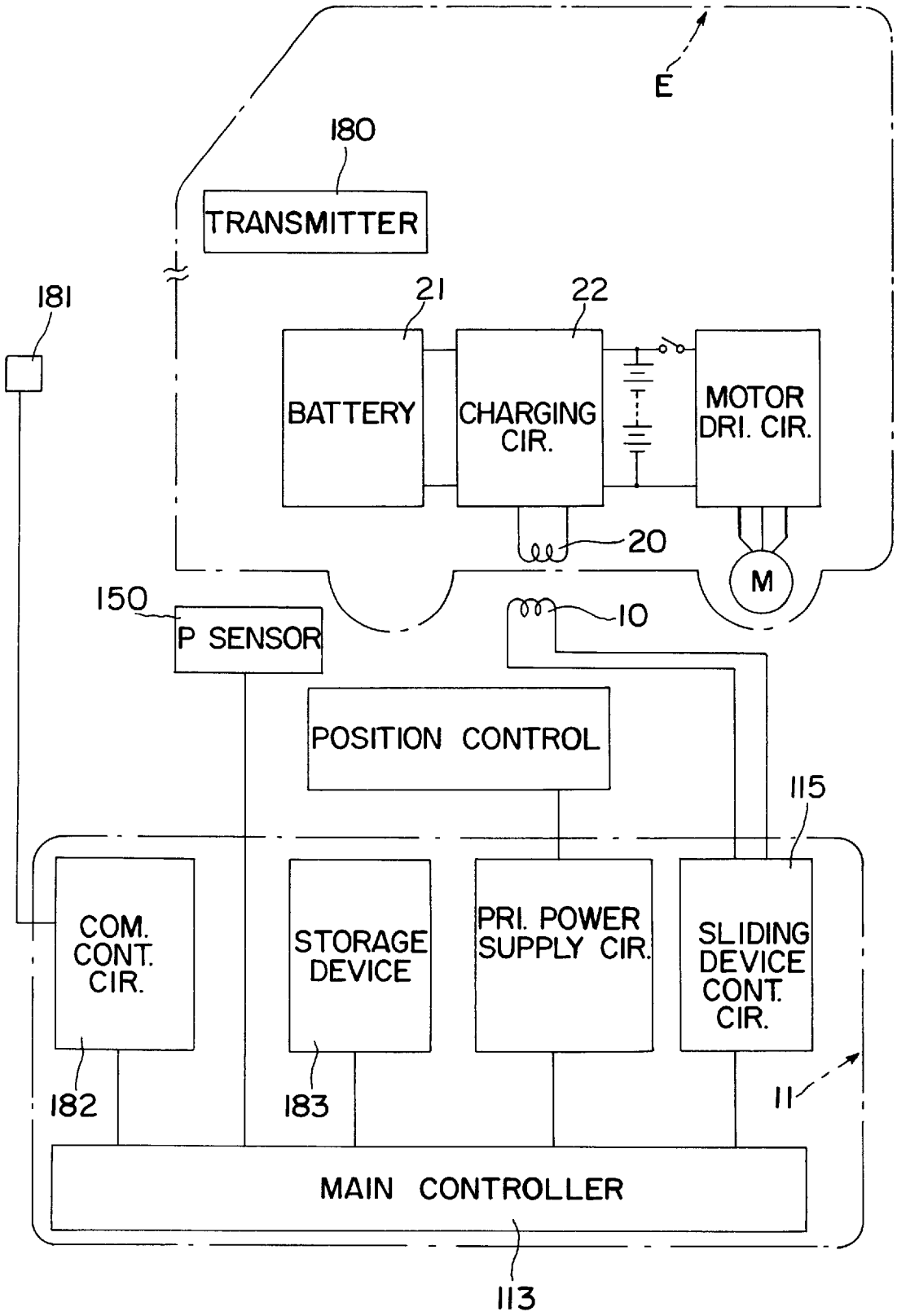
E
180
TRANSMITTER
181
21
22
BATTERY
CHARGING CIR.
MOTOR DRI. CIR.
20
M
150
P SENSOR
10
POSITION CONTROL
115
COM. CONT. CIR.
STORAGE DEVICE
PRI. POWER SUPPLY CIR.
SLIDING DEVICE CONT. CIR.
182
183
11
MAIN CONTROLLER
113

FIG. 44

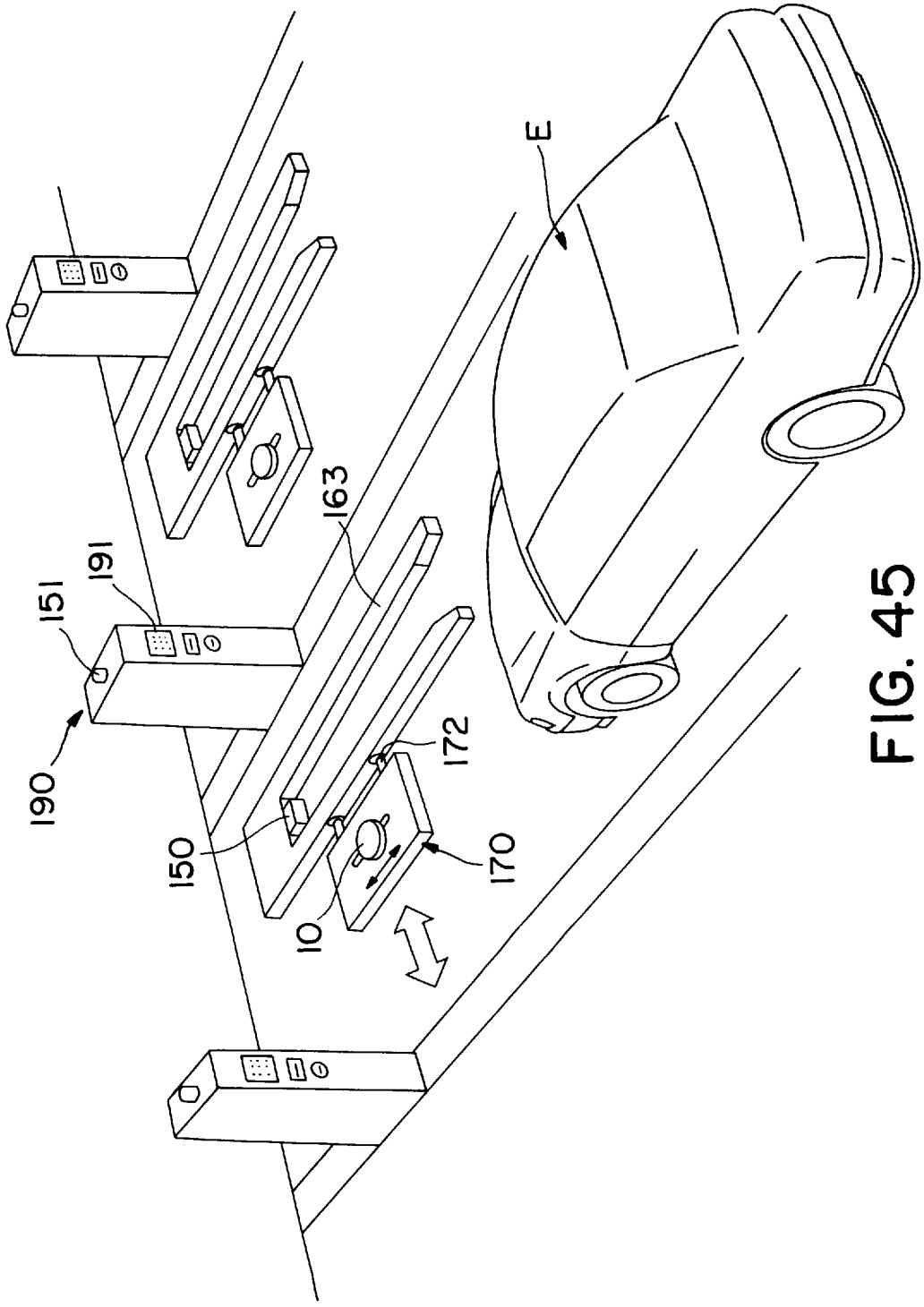

FIG. 45

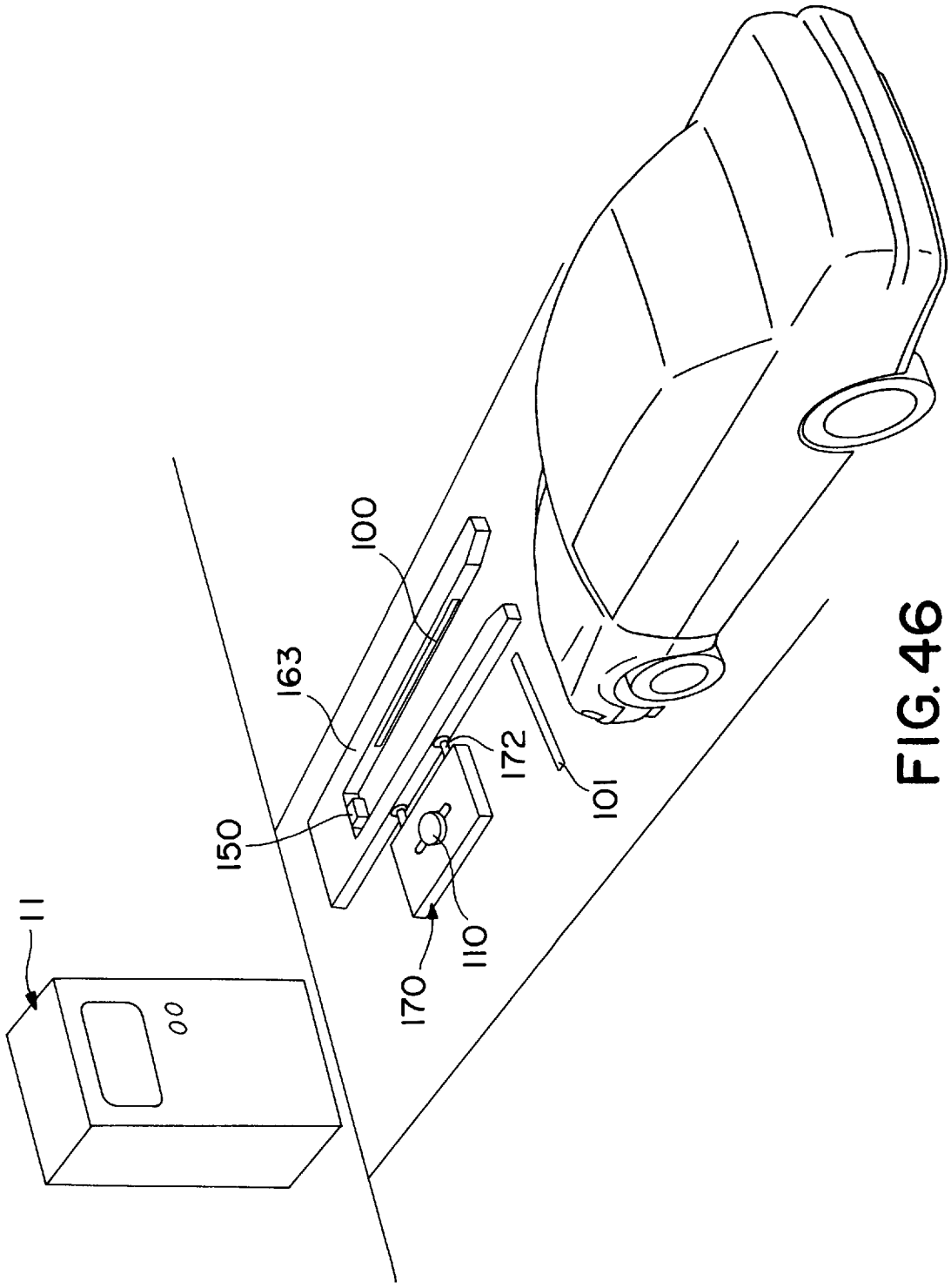

FIG. 46

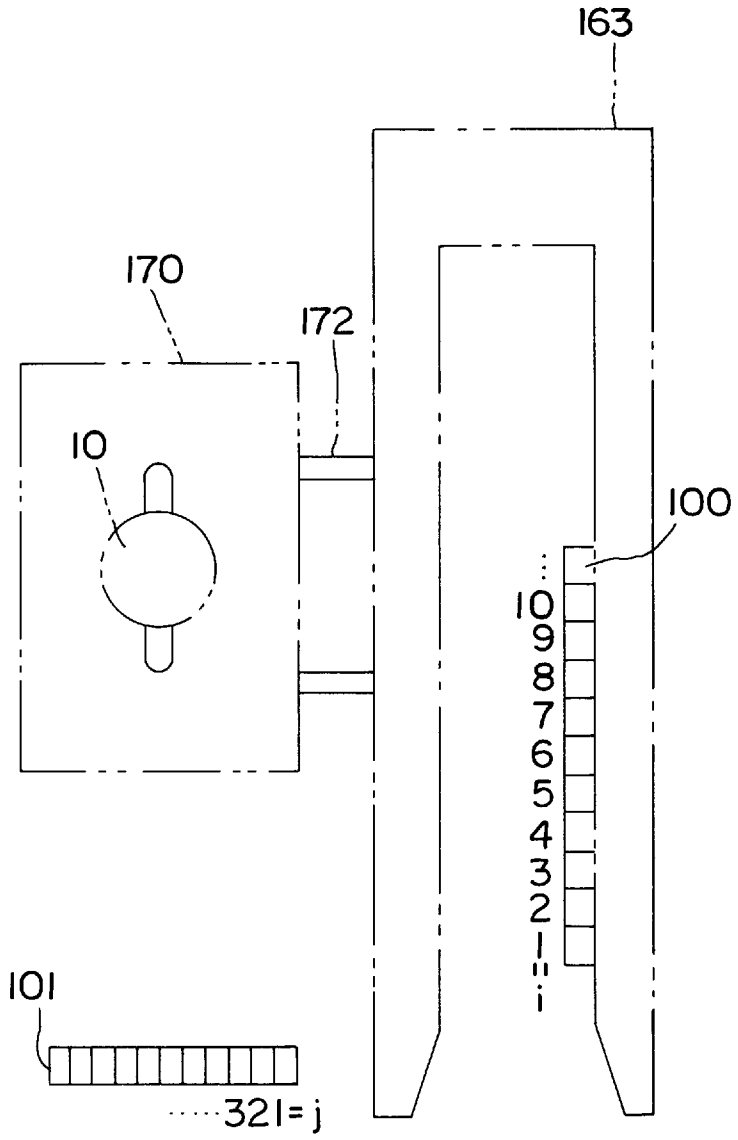

FIG. 47

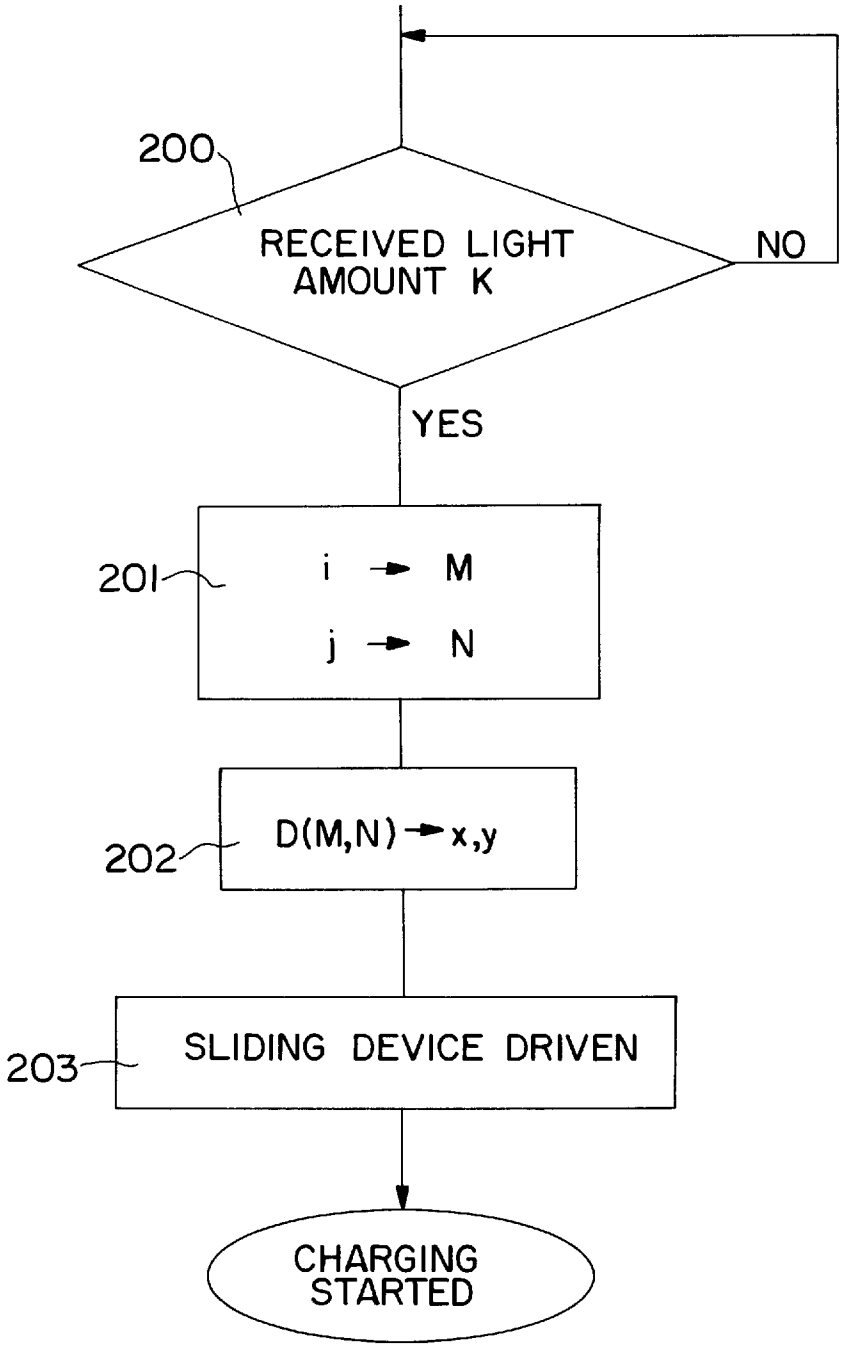
200
RECEIVED LIGHT AMOUNT K
NO
YES
201
i → M
j → N
202
D(M,N) → x,y
203
SLIDING DEVICE DRIVEN
CHARGING STARTED

FIG. 48

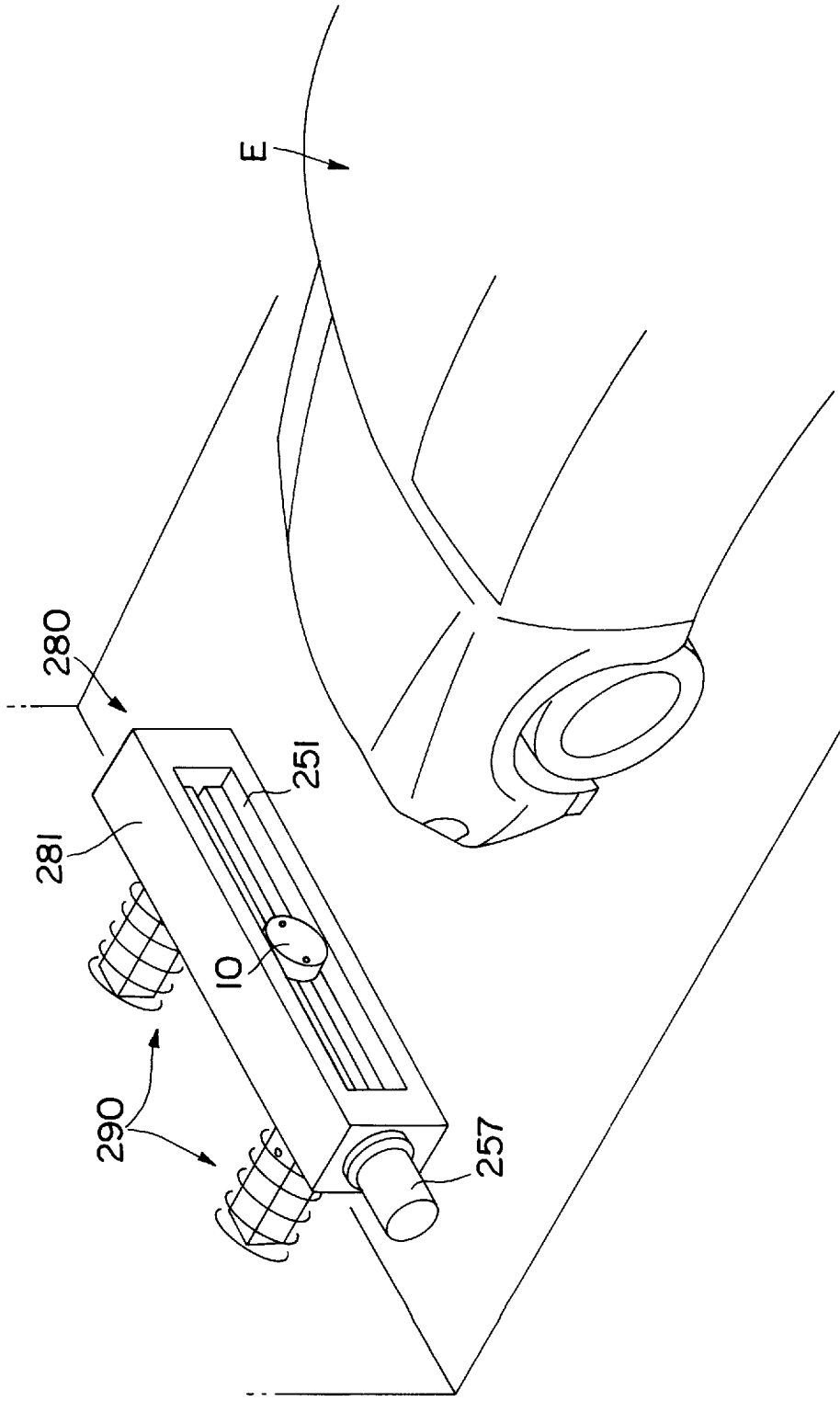

FIG. 49

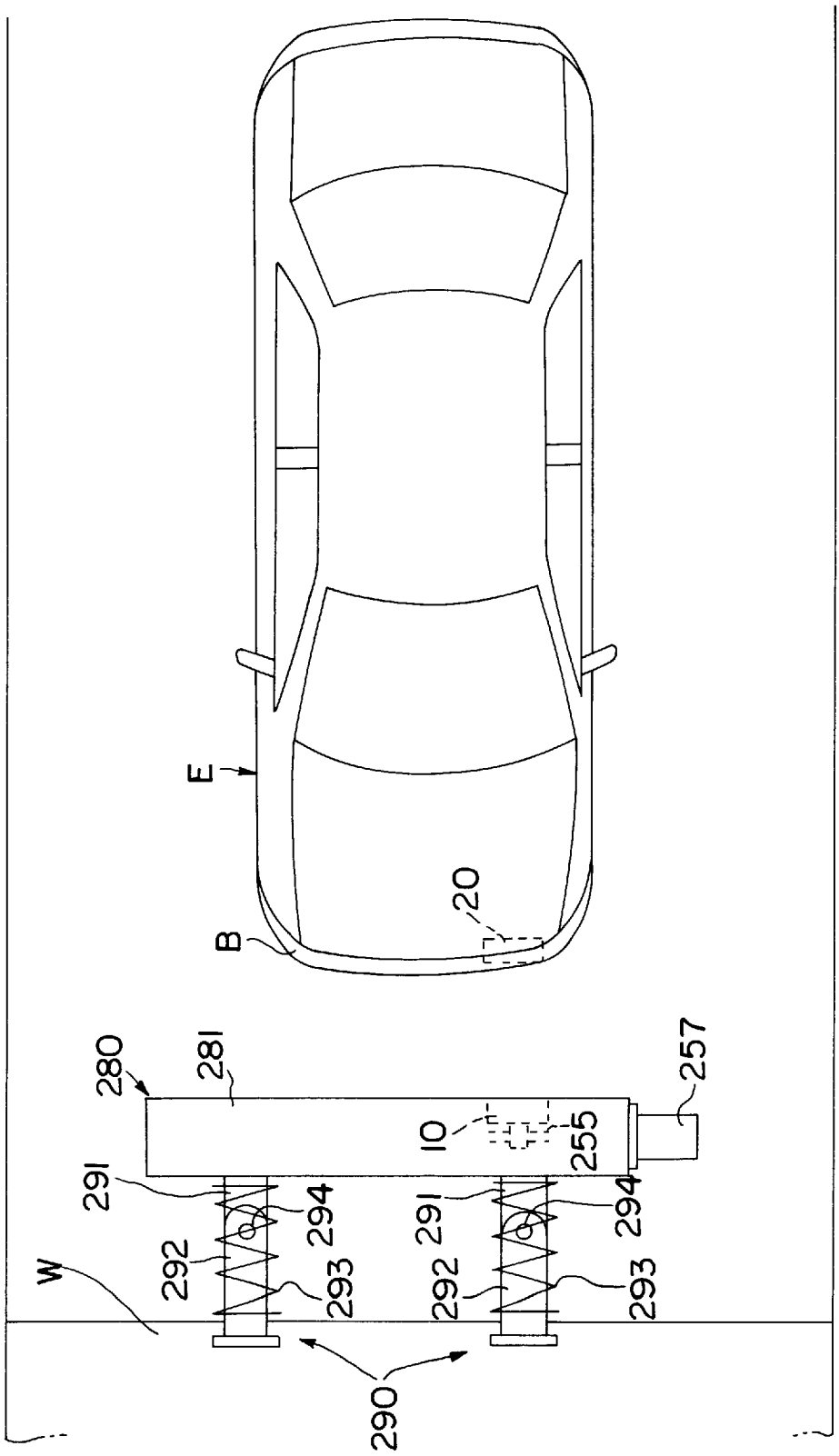

FIG. 50

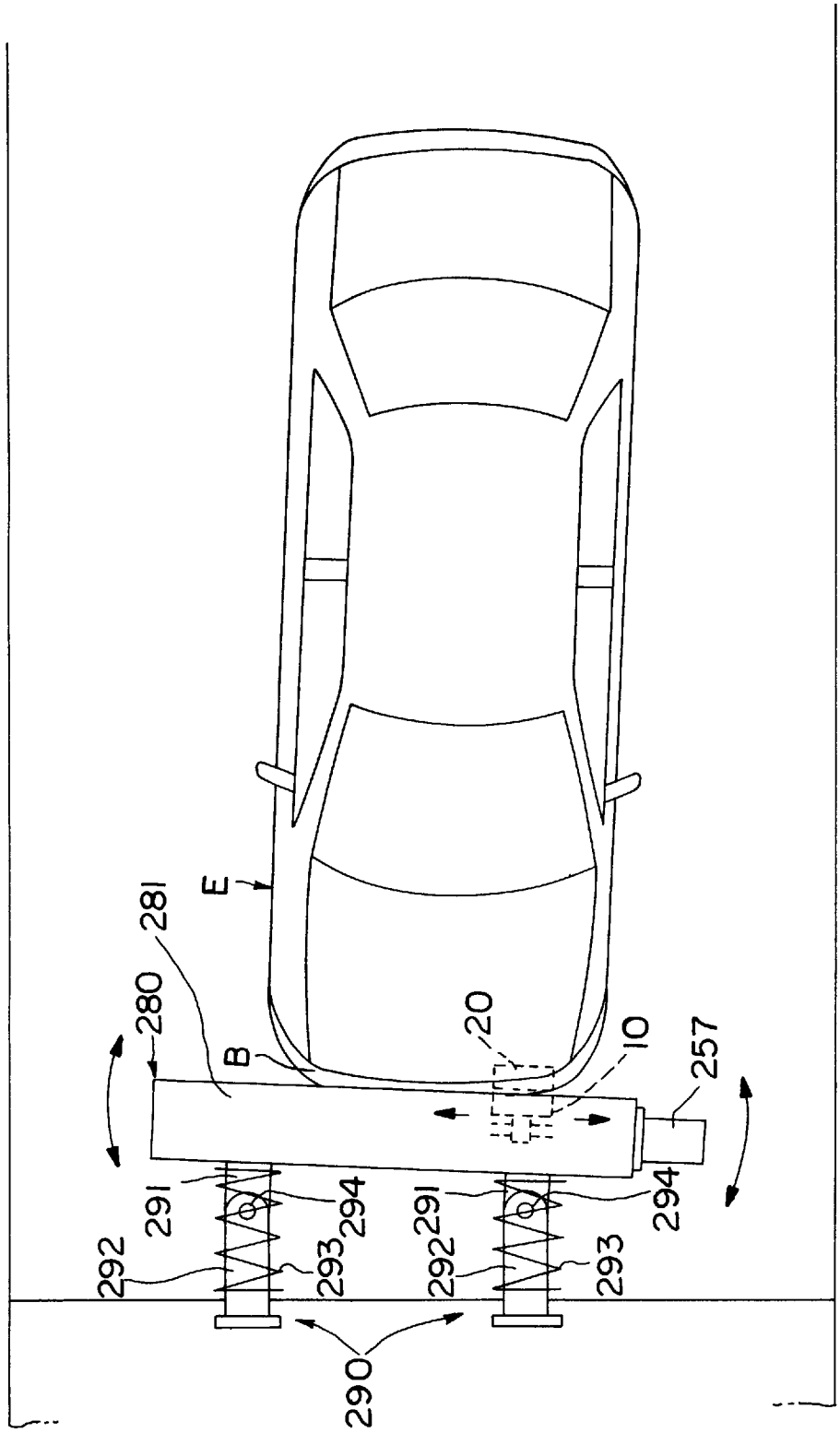

FIG. 51

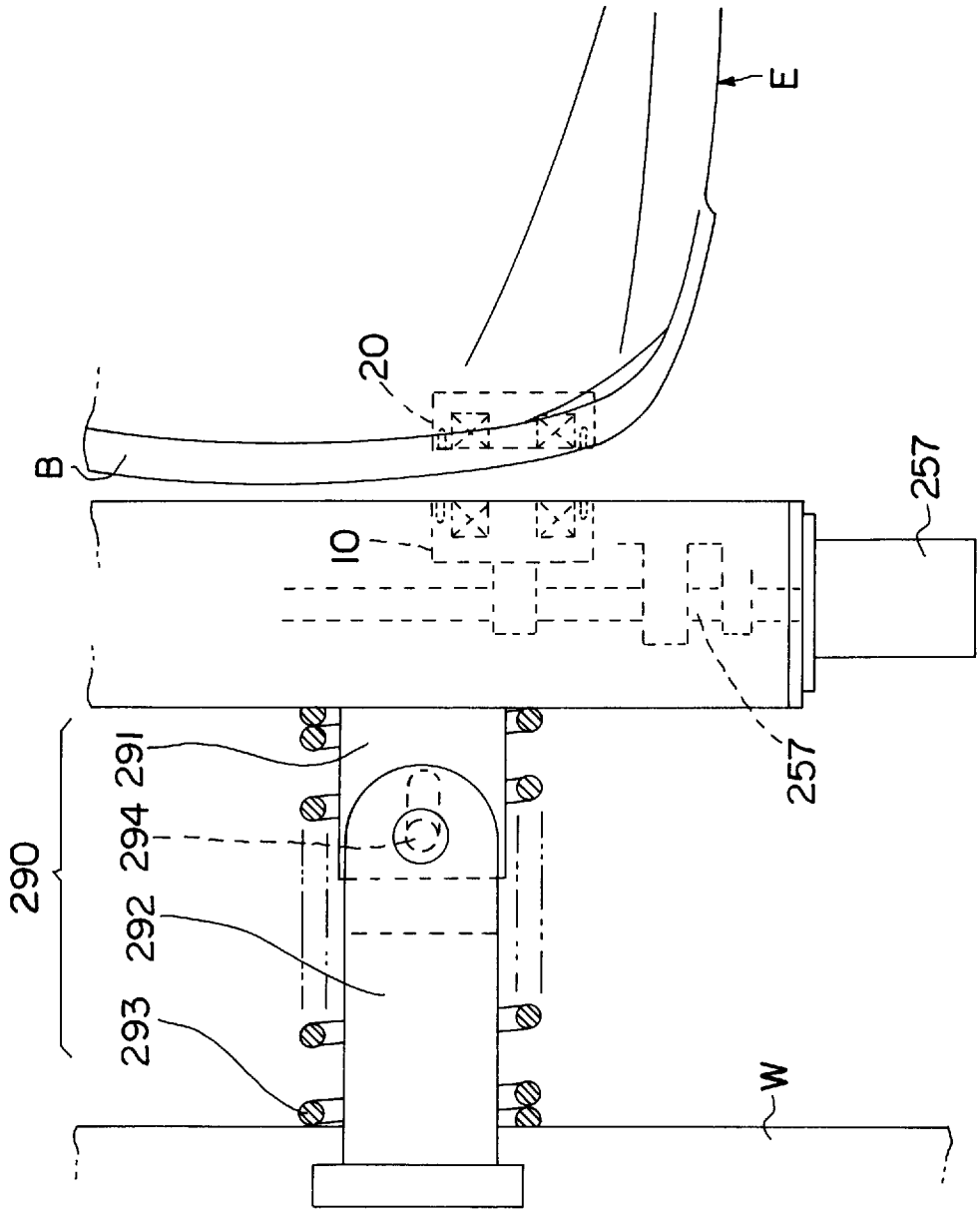

FIG. 52

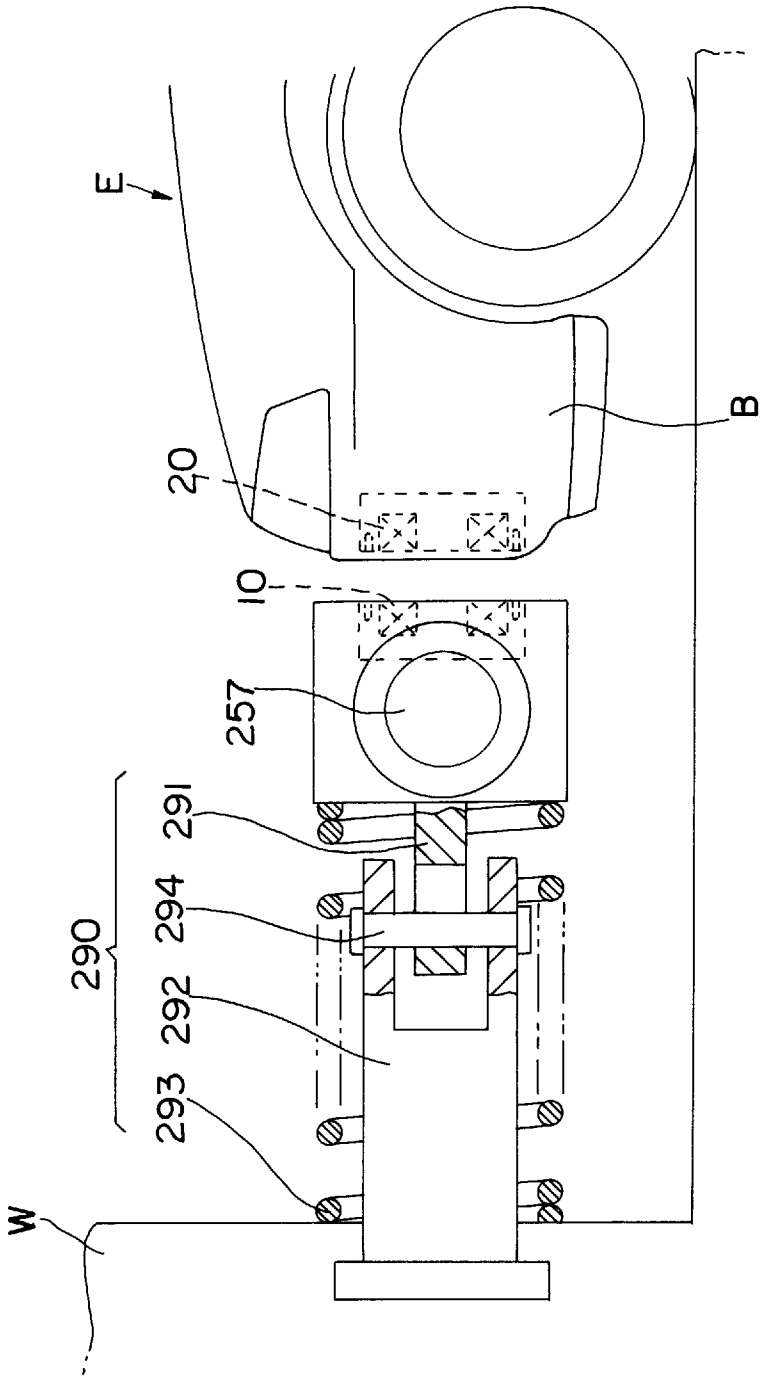

FIG. 53

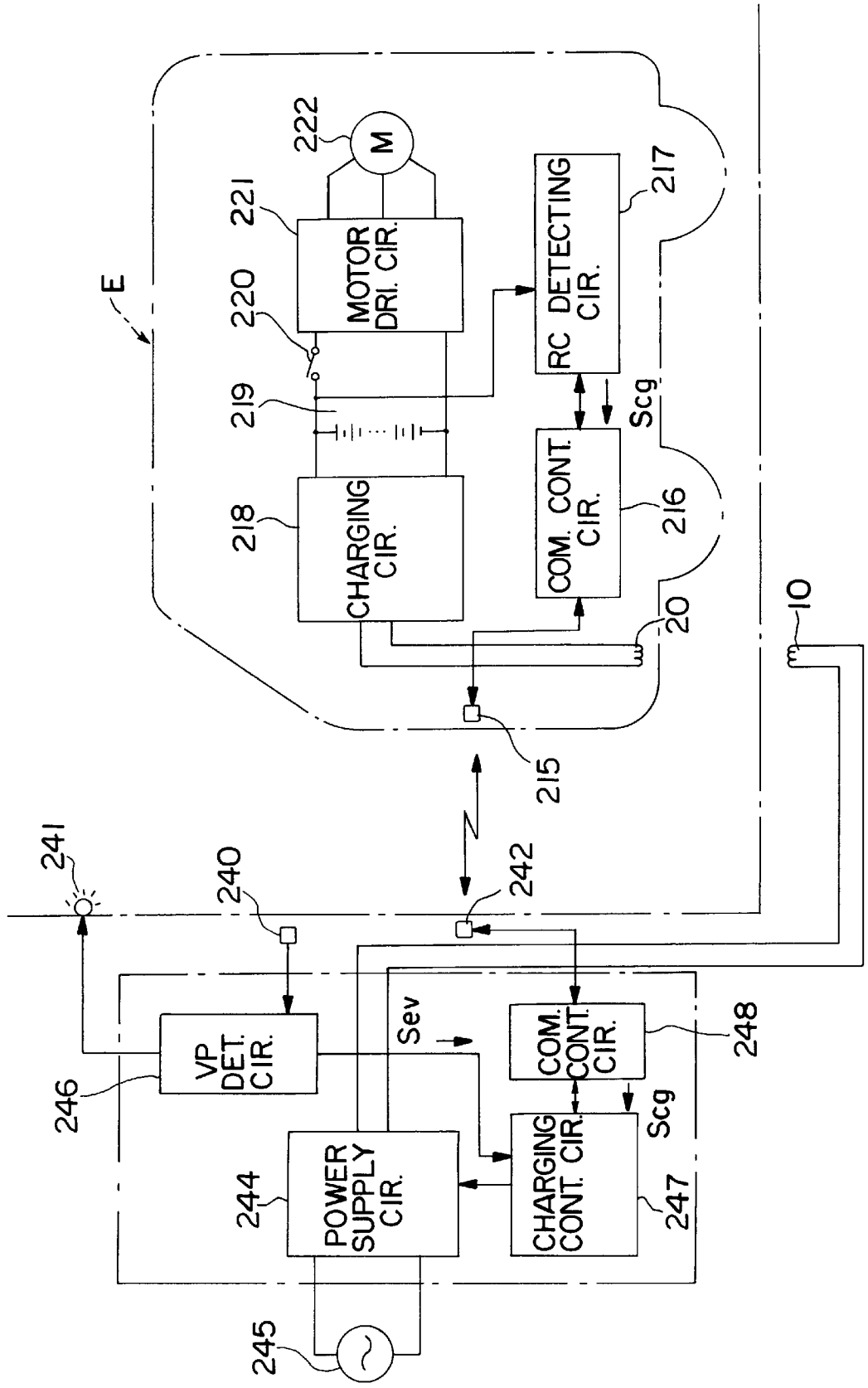
E
222
M
221
MOTOR DRI. CIR.
220
219
218
CHARGING CIR.
RC DETECTING CIR.
217
Scg
COM. CONT. CIR.
216
20
10
215
241
240
242
VP DET. CIR.
246
Sev
COM. CONT. CIR.
248
Scg
CHARGING CONT. CIR.
247
POWER SUPPLY CIR.
244
245

FIG. 54

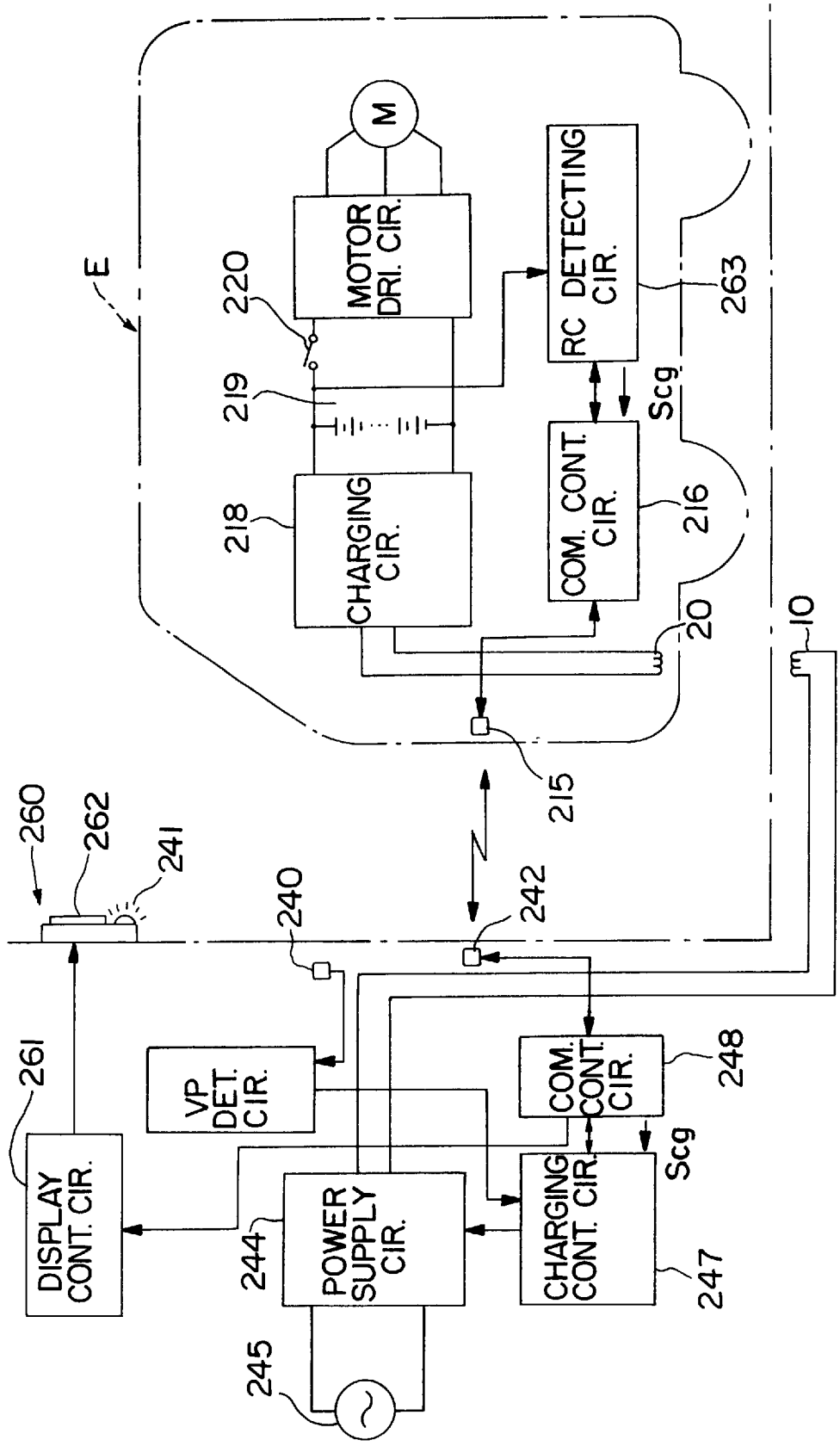
E
M
MOTOR DRI. CIR.
220
219
218
CHARGING CIR.
RC DETECTING CIR.
263
Scg
COM. CONT. CIR.
216
20
10
215
260
262
241
240
242
261
DISPLAY CONT. CIR.
VP DET. CIR.
COM. CONT. CIR.
248
Scg
CHARGING CONT. CIR.
247
244
POWER SUPPLY CIR.
245

FIG. 55

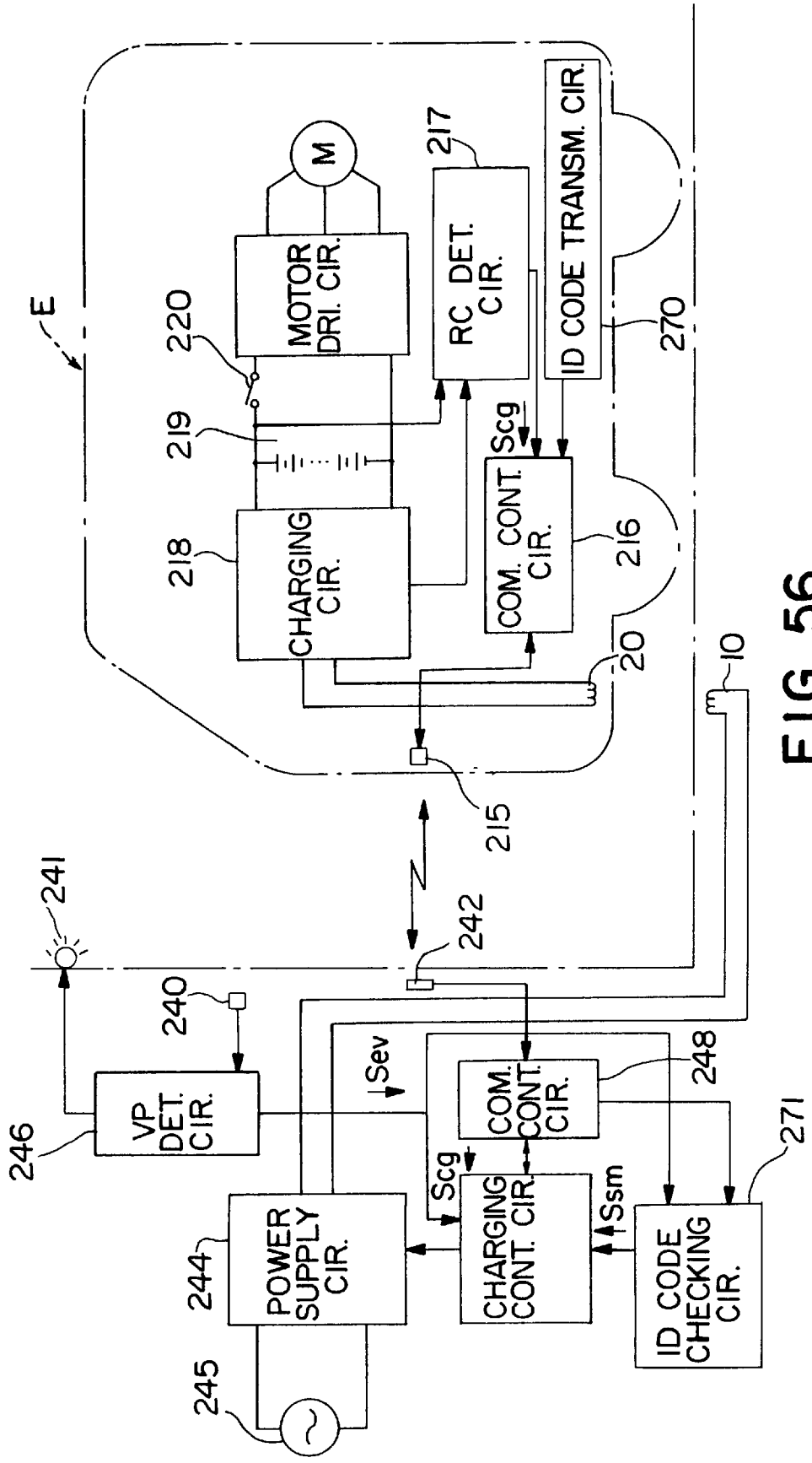
E
220
219
218
CHARGING CIR.
MOTOR DRI. CIR.
M
217
RC DET. CIR.
ID CODE TRANSM. CIR.
270
Scg
COM. CONT. CIR.
216
20
10
215
241
242
240
246
VP DET. CIR.
Sev
COM. CONT. CIR.
248
Scg
CHARGING CONT. CIR.
Ssm
ID CODE CHECKING CIR.
271
244
POWER SUPPLY CIR.
245

FIG. 56

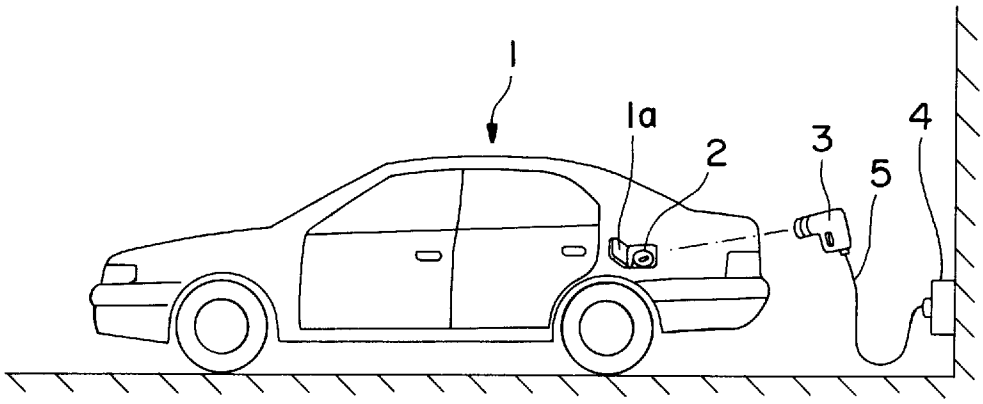

FIG. 57
PRIOR ART

CONNECTION SYSTEM AND CONNECTION METHOD FOR AN ELECTRIC AUTOMOTIVE VEHICLE

BACKGROUND OF THE INVENTION

1. Field of the Invention

The present invention relates to a connection system, in particular to a charging system, and to a connection method, in particular to a charging method, for charging an electric automotive vehicle.

2. Description of the Prior Art

A known charging system for charging an electric automotive vehicle is shown in FIG. **57**. A main body of an electric automotive vehicle **1** is provided with a vehicle side connector **2** connected with a drive battery used to drive the vehicle, and an external power supply connector **3** is connected with the vehicle side connector **2**. The power supply connector **3** is provided at the leading end of a cable **5** extending from a power source **4** for the charging which is installed outside the vehicle. Power from the power source **4** is supplied to the drive battery via the connectors **2** and **3**, thereby performing charging.

The above charging system requires operations of taking the power supply connector **3** from a charging facility, conveying it to the vehicle **1** while withdrawing the cable **5**, and connecting it with the vehicle side connector **2** after opening a connector lid **1***a* of the vehicle body. These operations are very cumbersome.

Further, since a prior art charging connector is constructed such that a passage of power is established by bringing terminals into engagement, a large resistance acts during the engaging operation. Accordingly, a relatively large force is needed to engage the connectors. Further, a function for preventing a current leak due to water drops such as raindrops needs to be provided.

In view of the above problems, an object of the present invention is to provide a connection system and connection method allowing an easy charging the electric automotive vehicle.

SUMMARY OF THE INVENTION

According to the invention, there is provided a connection system, in particular a charging system, for charging a battery or drive battery of an electric automotive vehicle used to drive the vehicle. The system comprises a primary coil connected or connectable with an external power source and a secondary coil connected or connectable with a battery or a load. The primary coil can be electromagnetically coupled or connected with the secondary coil for inducing a current in the secondary coil. According to a preferred embodiment, the connection system further comprises a coil position detecting means for detecting a positional relationship and/or a connection state or coupling condition between the primary and secondary coils (preferably for automatically coupling or connecting the primary and secondary coils). Preferably the connection system also comprises a coil moving means having a driving device and adapted to move at least one of the primary and secondary coils to a desired position.

The connection system may further comprise a control means for controlling the driving device of the coil moving means based on the detection result of the coil position detecting means to position or arrange the primary coil and/or the secondary coil in a predetermined or predeterminable positional relationship with respect to each other.

Thus the control means may guide one or both coils relative to one another to a position where they are to be electromagnetically coupled.

The coil position detecting means may detect the positional relationship between the primary and secondary coils based on an alternating and/or constant magnetic field generated by exciting at least one of the primary and secondary coils.

Most preferably, the coil position detecting means comprises one magnetic sensor or a plurality of spaced apart magnetic sensors that may be provided at the primary coil. Thus the coil position detecting means may detect the positional relationship between the primary and secondary coils based on a comparison result obtained by comparing the magnetic field intensities detected by the single magnetic sensor at different positions or detected by the plurality of magnetic sensors.

According to a further embodiment, the one or more magnetic sensors comprise at least one coil, at least one Hall probe means and/or at least one magnetoresistant device.

Preferably, the coil moving means comprises a body arrangeable or installed on a ground of a parking lot, gas station, garage or the like, to support the primary coil. The coil moving means further includes X-axis driving means for linearly moving the body along a specified direction, and Y-axis driving means for linearly moving the body along a direction arranged at an angle different from 0° or 180°, in particular substantially 90° to the moving direction of the body by the X-axis driving means. The coil moving means may comprise a pantograph mechanism, a ball screw mechanism and/or a fluid cylinder mechanism.

Further preferably, the coil moving means comprises: a body for supporting the primary coil, one or more wheels mounted on the body to drive the body, on the ground, and a driving mechanism controlled by the control means to drive the wheels.

According to a further preferred embodiment, the primary coil and the coil moving means are provided on a wall surface, and are arranged at an angle different from 0° or 180°, in particular substantially normal to the ground, e.g. of a parking lot. The coil moving means moves the primary coil along one or more directions substantially parallel to the ground and/or substantially normal thereto, and preferably substantially parallel to the wall surface.

The connection system may further comprise at least one wheel guide which is so provided as to have a predetermined or predeterminable positional relationship with respect to the primary coil. Thus one or more wheels of the vehicle are guided or guidable by the wheel guide to an electromagnetic connection or coupling position, where the secondary coil of the vehicle is or can be substantially electromagnetically connected with the primary coil.

The connection system may further comprise a position adjusting apparatus for differing or adjusting relative positions of the wheel guide and the primary coil, and/or a vehicle type discriminating apparatus for discriminating a type of vehicle being parked. In particular the secondary coil of the vehicle and the primary coil may be guided to the electromagnetic connection position by driving the position adjusting apparatus in accordance with the vehicle type discriminated by the vehicle type discriminating apparatus.

The coil moving means may be provided on a coil positioning apparatus supported by an elastic support means on a wall surface disposed at an angle different from 0° or 180°, preferably substantially normal, to the ground. The elastic support means allows for an elastic positioning of the

coil positioning apparatus, preferably in dependence of a side wall portion e.g. a bumper of the vehicle, for achieving a connection or coupling of the primary and secondary coils.

A charging control circuit may be provided for controlling the exciting of the primary coil. The charging control circuit may comprise a remaining capacity detecting means for detecting a remaining capacity of the battery. The charging control circuit preferably excites the primary coil if the remaining capacity detected by the remaining capacity detecting means is equal to or smaller than a predetermined or predeterminable value.

A display means also may be provided for displaying a charging or charged state corresponding to the remaining capacity of the battery. The display means preferably is in the parking space and/or on the vehicle.

Further, there may be provided an identification code transmitting means provided in connection with the secondary coil, in particular provided in the vehicle. An identification code checking means may be provided in connection with the primary coil, in particular provided in the parking space, for comparing an identification code received from the identification code transmitting means with a prestored identification code. A charging control circuit then may excite the primary coil on condition that the identification codes compared by the identification code checking means agree.

According to a further preferred embodiment of the invention there is provided a connection system, in particular a charging system for charging a drive battery of an electric automotive vehicle used to drive the vehicle by electromagnetically coupling a primary coil connected to an external power source with a secondary coil connected to the drive battery. The system comprises coil position detecting means for detecting a positional relationship between the primary and secondary coils. The system also includes a coil moving means, which comprises a driving device and which is adapted to move at least one of the primary and secondary coils to a desired position. Control means is provided for controlling the driving device of the coil moving means based on the detection result of the coil position detecting means to guide both coils to a position where they are to be electromagnetically coupled.

With this construction, since the coils are guided to the position where they are to be electromagnetically coupled while the positions thereof are being detected, no electromagnetic connection is established while the coils are displaced from each other. Thus, charging can be performed with a good energy transmission efficiency.

Preferably, the coil position detecting means detects the positional relationship between the primary and secondary coils based on a magnetic field generated by exciting one of the primary and secondary coils.

With this construction, since the primary and secondary coils in principle provided for the power transmission can be used to detect the positional relationship thereof, a production cost can be reduced by reducing the number of parts.

In order to detect the positional relationship of the coils based on a magnetic field generated by one of the coils, there may be considered two constructions. In a first construction, magnetic sensors are provided at the primary coil and the secondary coil is excited as described below (i.e. the coil position detecting means comprises a plurality of spaced apart magnetic sensors provided at the primary coil) and detects the positional relationship between the primary and secondary coils based on a comparison result obtained by comparing the magnetic field intensities detected by the magnetic sensors. In a second construction, the primary coil is merely excited without providing the magnetic sensors. In the latter construction, when the primary coil is excited, the phase of a current flowing through the primary coil differs depending upon the degree of magnetic connection between the primary and secondary coils. Accordingly, a distance between the two coils can be detected by measuring the phase difference between an exciting voltage and an exciting current.

Further preferably, the coil position detecting means comprises a plurality of spaced apart magnetic sensors provided at the primary coil, and detects the positional relationship between the primary and secondary coils based on a comparison result obtained by comparing the magnetic field intensities detected by the magnetic sensors.

In this construction, since a plurality of magnetic sensors are spaced apart, the detection results of the magnetic field intensities detected by the respective magnetic sensors differ depending upon the distance from the excited coil and the directions thereof. Accordingly, the positional relationship of the coils can be detected by calculation based on the different detection results and the positional relationship of the magnetic sensors.

Still further preferably, the coil moving means comprises a body installed on a ground of a parking lot to support the primary coil, X-axis driving means for linearly moving the body along a specified direction, and Y-axis driving means for linearly moving the body along a direction normal to the moving direction of the body by the X-axis driving means.

With the above construction, the primary coil can be freely moved to the desired position by the two driving means. Further, since the two driving means form orthogonal coordinate systems, the control means can easily conduct a calculation for the operation of these driving means.

Most preferably, the coil moving means comprises a body for supporting the primary coil, wheels mounted on the body to drive the body on the ground, and a driving mechanism controlled by the control means to drive the wheels.

In the above construction, the body carrying the primary coil runs toward the secondary coil on the ground of the parking lot. Accordingly, this charging system can be adopted without necessitating a large-scale reconstruction in already existing parking facilities.

According to another preferred embodiment of the invention there is provided a connection or charging system for charging an electric automotive vehicle during parking. The vehicle comprises a battery as a drive source and a secondary coil, preferably provided at the bottom of a vehicle body, and connectable with an external power source unit. A primary coil connected with the external power source unit preferably is provided in a position where the vehicle is to be parked and is to be electromagnetically connected or coupled with the secondary coil to supply power to the drive battery and/or a load.

With the above construction, since the secondary coil is provided at the bottom of the vehicle, the primary and secondary coils are caused to face each other by parking the vehicle in a predetermined position. Accordingly, a preparation for the charging of the vehicle can be considerably easily performed.

At least one of the primary and secondary coils may be supported by coil moving means which is movable between an induction position and a standby position, in particular substantially upward and downward.

With the above construction, since the coil(s) is/are moved upward and downward by the coil moving means, the

facing coils can be brought sufficiently close to each other, enhancing the degree of electromagnetic connection. This leads to an improved power transmission efficiency.

Further preferably, there is further provided a parking position detecting means for making a detection that the parked vehicle is in a predetermined charging position, and the primary coil is excited upon making said detection.

With the above construction, the charging is performed on condition that the vehicle is in the charging position. This prevents the vehicle from being charged while the primary and secondary coils are displaced from each other. Accordingly, the coils can be properly electromagnetically connected to ensure a satisfactory charging efficiency.

Still further preferably, there is further provided a wheel guide which is so provided as to have a specified positional relationship with respect to the primary coil. The wheels of the vehicle are guided by the wheel guide to an electromagnetic connection position where the secondary coil of the vehicle is electromagnetically connected with the primary coil.

With the above construction, since the coils are guided to the electromagnetic connection position by advancing the vehicle along the wheel guide, the charging of the vehicle can be far more easily prepared, constantly in an identical or similar manner.

Most preferably, there are further provided a position adjusting apparatus for differing relative positions of the wheel guide and the primary coil and a vehicle type discriminating apparatus for discriminating a type of the vehicle to be parked. The secondary coil of the vehicle and the primary coil are guided to the electromagnetic connection position by driving the position adjusting apparatus in accordance with the vehicle type discriminated by the vehicle type discriminating apparatus.

With the above construction, the relative positions of the wheel guide and the primary coil are adjusted by the position adjusting apparatus based on the discrimination result of the vehicle type discriminating apparatus. Accordingly, even if the positional relationship of the wheels and the secondary coil varies depending upon the vehicle type, the vehicles of different types can be guided to the respective proper charging positions. Thus, there can be realized a general-purpose charging system which is independent of the vehicle type.

According to a further preferred embodiment, there are further provided a position adjusting apparatus for differing relative positions of the wheel guide and the primary coil and a secondary coil measuring apparatus for measuring a positional relationship of the secondary coil and the wheels of the vehicle to be parked. The secondary coil of the vehicle and the primary coil are guided to the electromagnetic connection position by driving the position adjusting apparatus in accordance with the position of the secondary coil measured by the secondary coil position measuring apparatus.

With the above construction, the position of the secondary coil provided at the bottom of the vehicle is measured as a positional relationship to the wheels, and the relative positions of the wheel guide and the primary coil are adjusted by the position adjusting apparatus based on the measurement result. Accordingly, even if the positional relationship of the wheels and the secondary coil varies depending upon the vehicle type, the vehicles of different types can be guided to the respective proper charging positions. Thus, there can be realized a general-purpose charging system which is independent of the vehicle type.

According to the invention, there is further provided a connection method, in particular a charging method for charging a battery or drive battery of an electric automotive vehicle used to drive the vehicle, in particular using a connecting system according to the invention. The method comprises a first step of electromagnetically coupling a primary coil that is connected or connectable to an external power source with a secondary coil connected or connectable to a battery and/or a load. The method proceeds by inducing a current from the primary coil in the secondary coil.

The connection method may further comprise the step of determining the positional relationship and/or a coupling or connection state of the primary and secondary coils with respect to each other. The method may also comprise positioning the primary and the secondary coils in a predetermined or predeterminable modified positional relationship with respect to each other based on the determined positional relationship. The positioning step preferably is performed automatically.

Preferably, the determination step comprises a step of analyzing one or more detection signals of a coil position detecting means and/or comparing two or more detection signals of a coil position detecting means. In particular the determining step includes comparing magnetic field intensities detected by one or more magnetic sensors of the coil position detecting means, and controlling a coil moving means in accordance with the result of the analyzing step and/or of the comparison step.

Further preferably, the determination step comprises a step of exciting at least one of the primary coil and the secondary coil and, preferably detecting the induction in the other of the primary coil and the secondary coil or in a magnetic sensor means.

Most preferably, the excitation of at least one of the primary coil and the secondary coil is performed with a specified frequency and wherein the determination step further comprises a step of comparing a phase of an exciting voltage with the phase of the induced current in the other of the primary coil and the secondary coil.

These and other objects, features and advantages of the present invention will become more apparent upon a reading of the following detailed description and accompanying drawings in which the same reference numerals refer to same or similar elements.

BRIEF DESCRIPTION OF THE DRAWINGS

FIG. **1** is a perspective view of a first embodiment of the invention.

FIG. **2** is a side view partly in section showing a secondary coil in its mount position in an electric automotive vehicle.

FIG. **3** is a perspective view of a coil moving means of the first embodiment.

FIG. **4** is a section along IV—IV of FIG. **3**.

FIG. **5** is a section along V—V of FIG. **4**.

FIG. **6** is a perspective view showing a state where a primary coil is raised by extending a pantograph.

FIG. **7** is a diagram showing a state where magnetic sensors a, b are at different distance from the secondary coil.

FIG. **8** is a diagram showing a state where the magnetic sensors a, b are equidistant from the secondary coil.

FIG. **9** is a block diagram showing the system construction of the first embodiment.

FIG. **10** is a plan view showing a state where the primary coil of the coil moving means is distanced from the second coil of the vehicle.

FIG. **11** is a plan view showing a state where there is no displacement along an X-direction between the primary and secondary coils.

FIG. **12** is a plan view showing a state where there is no displacement along a Y-direction between the primary and secondary coils.

FIG. **13** is a perspective view showing a state where the primary and secondary coils are brought into contact.

FIG. **14** is a side view showing a state where the primary and secondary coils are brought into contact.

FIG. **15** is a perspective view of a second embodiment of the invention.

FIG. **16** is a side view of a self-propelled car as a coil moving means.

FIG. **17** is a plan view of the self-propelled car.

FIG. **18** is a section along XVIII—XVIII of FIG. **16**.

FIG. **19** is a section along XVIIII—XVIIII of FIG. **16**.

FIG. **20** is a plan view showing a state where a primary coil of the self-propelled car is distanced from the secondary coil of the vehicle.

FIG. **21** is a plan view showing a state where the self-propelled car is directed toward the secondary coil.

FIG. **22** is a plan view showing a state where the self-propelled car is advanced to move the primary coil to a position below the secondary coil.

FIG. **23** is a side view showing a state where the primary coil of the self-propelled car is distanced from the secondary coil of the vehicle.

FIG. **24** is a side view showing a state where the self-propelled car is advanced to move the primary coil to the position below the secondary coil.

FIG. **25** is a side view showing a state where the primary and secondary coils are brought into contact.

FIG. **26** is a perspective view of a first modification of the coil moving means as a third embodiment.

FIG. **27** is a perspective view of a second modification of the coil moving means as a fourth embodiment.

FIG. **28** is a perspective view of a fifth embodiment according to the invention.

FIG. **29** is a plan view of the fifth embodiment.

FIG. **30** is a side view of the fifth embodiment.

FIG. **31** is a partial enlarged side view of the fifth embodiment.

FIG. **32** is a perspective view showing a state where coils of the fifth embodiment are electromagnetically connected.

FIG. **33** is a side view of a fifth modification of a coil moving means of the fifth embodiment.

FIG. **34** is a side view of a second modification of the coil moving means of the fifth embodiment.

FIG. **35** is a side view of a sixth embodiment according to the invention.

FIG. **36** is a block diagram of the sixth embodiment.

FIG. **37** is a side view of a first modification of a parking position detecting means of the sixth embodiment.

FIG. **38** is a side view of a second modification of a parking position detecting means of the sixth embodiment.

FIG. **39** is a side view of a third modification of a parking position detecting means of the sixth embodiment.

FIG. **40** is a perspective view of a seventh embodiment according to the invention.

FIG. **41** is a perspective view of a first modification of a wheel guide of the seventh embodiment.

FIG. **42** is a perspective view of a second modification of the wheel guide of the seventh embodiment.

FIG. **43** is a perspective view of a eighth embodiment according to the invention.

FIG. **44** is a block diagram of the eighth embodiment.

FIG. **45** is a perspective view of a modification of the eighth embodiment.

FIG. **46** is a perspective view of a ninth embodiment according to the invention.

FIG. **47** is a schematic plan view showing the arrangement of sensors of the ninth embodiment.

FIG. **48** is a flow chart showing a positioning operation according to the ninth embodiment.

FIG. **49** is a perspective view of a parking space according to a tenth embodiment of the invention.

FIG. **50** is a plan view of an electric automotive vehicle parked in the parking space according to the tenth embodiment.

FIG. **51** is a plan view of an electric automotive vehicle obliquely parked in the parking space according to the tenth embodiment.

FIG. **52** is a plan view showing an electromagnetically connected state in the tenth embodiment.

FIG. **53** is a side view showing the electromagnetically connected state in the tenth embodiment.

FIG. **54** is a block diagram of a charging system according to the eleventh embodiment.

FIG. **55** is a block diagram of a twelfth embodiment of the invention.

FIG. **56** is a block diagram of a thirteenth embodiment of the invention.

FIG. **57** is a side view of a prior art charging system.

DETAILED DESCRIPTION OF THE PREFERRED EMBODIMENTS

Hereafter, a first embodiment of the invention is described with reference to FIGS. **1** to **14**.

FIG. **1** shows an electric automotive vehicle E advancing into a parking lot equipped with a charging system **11** according to the invention.

The vehicle E includes, as a main power source, a battery **21** which is a charging device for a driving source. Upon receipt of power supplied from the battery **21**, a motor for driving the vehicle and a variety of electric devices function. A secondary coil **20** is connected with the battery or accumulator **21** via a charging circuit **22**, and an alternating current induced by the secondary coil **20** is charged or accumulated after being rectified.

The secondary coil **20** is particularly in the form of a flat disk formed by, e.g. winding a wire around a magnetic core of ferrite, and is accommodated in a protection casing e.g. of synthetic resin. As shown in FIG. **2**, the secondary coil **20** is mounted at the bottom of the vehicle body with the longitudinal axis of the magnetic core along a substantially vertical direction, so as to substantially face the ground. The secondary coil **20** generates an alternating magnetic field by being excited in a specified cycle in accordance with the operation of an operation unit provided in the vehicle E. The alternating magnetic field is used for the position detection.

On the other hand, a recess A is formed in the ground of the parking lot, and a coil moving device **30** (coil moving means) for movably supporting a primary coil **10** is provided in the recess A. The width of the recess A is slightly narrower

than the spacing between the left and right wheels of the vehicle E, and the length thereof is about the half of the length of the vehicle E.

The coil moving device **30** in the recess A includes, as shown in FIG. **3**, a so-called X-Y table for moving a flat boxlike body **40** in two mutually orthogonal directions by two sliding units **31**.

Hereafter, the construction of the sliding units is described. The two sliding units are distinguished by adding suffixes x, y to reference numerals (**31** to **37**). When no suffixes x, y are given, both sliding units are referred to.

The sliding unit **31** includes a pair of rails **32** supported in parallel and a slider **33** for making a linear movement along the rails **32** with a low friction. Between the rails **32**, a ball screw mechanism including an internally threaded portion **34** and an externally threaded portion **35** is provided substantially in parallel with the rails **32**. The internally threaded portion **34** is mounted on an object supported by the slider **33**, and the externally threaded portion **35** is coupled with a rotatable shaft of a motor **36**. The housing of the motor **36** is secured at a side where the rails **32** are supported. A driving force of the motor **36** acts to move the object supported by the slider **33** along the rails **32**.

In the coil moving device **30**, the rails **32***x* of one sliding unit are secured to the bottom surface of the recess A (this sliding unit is called an X-axis driving unit **31***x*), and the rails **32***y* of the other sliding unit are supported on the slider **33***x* of the X-axis driving unit **31***x* so as to extend in a direction normal to the rails **32***x* (this other sliding unit is called a Y-axis driving unit **31***y*). The flat boxlike body **40** is supported on the slider **33***y* of the Y-axis driving unit **31***x*, and is moved to any desired position with respect to the ground of the parking lot by moving the driving units **31***x*, **31***y*. The moving direction of the X-axis driving unit **31***x* is a direction along which the vehicle E advances in the parking lot as shown in FIG. **1** (hereafter, the moving direction of the X-axis and Y-axis driving units are referred to as X-direction and Y-direction, respectively).

As shown in FIGS. **4** and **6**, the body **40** has a circular opening **41** in its upper surface. The primary coil **10** is provided in the opening **41**, and three magnetic sensors **50** (coil position detecting means) are arranged around the opening **41**. Further, a pantograph **43** which extends and contracts by being driven by a motor **42** shown in FIG. **5** is provided in the body **40**. One end of the pantograph **43** is secured to the bottom surface, and the other end thereof is secured to the bottom surface of the primary coil **10**, thereby making the primary coil **10** movable upward and downward i.e. in the direction toward the automotive vehicle E as shown in FIG. **6**.

The primary coil **10** is in the form of a flat plate formed by winding a wire around a magnetic core of, e.g. ferrite, and is accommodated in a circular protection casing of, e.g. synthetic resin. The outer diameter of the protection casing is such that it is fitted into the opening **41** with a slight clearance therebetween. In other words, the primary coil **10**, the opening **41** and a circle (L1 in FIGS. **3** and **5**) along which the sensors **50** are substantially arranged are preferably concentric circles. The sensors **50** are so arranged as to trisect the circle L1.

Gears **44**, **45** are provided on parts of the pantograph **43** so that the pantograph **43** moves laterally symmetrically, making the pantograph **43** extendible and contractible along the vertical direction. The motor **42** is coupled with one of the gears **44**, **45** to transmit the driving force thereof. The motor **42** is provided with a speed reducer **42***a* so as to generate a suitable driving force at a suitable speed. Although the pantograph **43** is used to move the primary coil **10** upward and downward, a ball screw or an air cylinder may be used.

Each of the three magnetic sensors **50** is formed by, e.g. molding a small coil wound by a wire with synthetic resin, and detects the intensity of the magnetic field by an electromotive force induced in the small coil. One of the sensors **50** is arranged on a line (L2' in FIGS. **3** and **5**) passing through the center of the primary coil **10** in parallel with the Y-direction, and is so arranged around the opening **41** as to trisect the circle L1 with the other two sensors **50** as described above (hereafter, the magnetic sensor located on the line L2 is identified by **50***a*, and the other two sensors are identified by **50***b*, **50***c* with respect to the clockwise direction from the sensor **50***a*).

The basic principle of the coil position detection is as follows.

As diagrammatically shown in FIG. **7**, when the vehicle E is parked at the parking lot and a constant or alternating magnetic field is generated by exciting the secondary coil **20**, the magnetic field intensities detected by the magnetic sensors (S1, S2 in FIG. **7**) spaced from the secondary coil **20** by different distances (R1, R2 in FIG. **7**) differ. As the body **40** is moved toward the magnetic sensor S1 having detected the stronger magnetic field intensity, the respective magnetic sensors S1, S2 become equidistant from the secondary coil **20**, with the result that the magnetic field intensities detected by the sensors S1, S2 substantially agree. If this principle is applied to the three sensors **50***a*, **50***b*, **50***c* of this embodiment, the primary coil **10** concentric with the circle L1 is right opposed to the secondary coil **20** when the magnetic field intensities detected by these sensors **50** agree.

The magnetic sensors are not limited to those of the aforementioned coil type, but Hall devices, magnetoresistance devices or the like may be used.

Signal lines or power transmission lines of the aforementioned primary coil **10**, three magnetic sensors **50** and motors (**36***x*, **36***y*, **42**) are connected with a main controller **12** (control means) or power supply circuits **13***a* to **13***e* (the magnetic sensors **50** are connected via an amplifier **14**) in the external power supply equipment **11**. The signals detected by the magnetic sensors **50** are processed by the main controller **12** to operate the respective elements. The algorithm of the data processing by the main controller **12** is described below, together with the charging procedure of this embodiment.

The vehicle E is advanced into the parking lot (FIG. **1**) to park such that the recess A is located between the left and right wheels of the vehicle E (FIG. **10**), and the secondary coil **20** is switched to a charging preparatory state by the operation unit of the vehicle E.

Then, the secondary coil **20** is excited to generate a specified alternating magnetic field in the parking lot. Unless the secondary and primary coils **20**, **10** are accurately opposed to each other, distances Ra, Rb, Rc between the three magnetic sensors **50***a*, **50***b*, **50***c* and the center of the secondary coil **20** differ, with the result that the magnetic field intensities detected by these sensors **50** also differ.

The different detection results of the sensors **50** are compared in the main controller **12** as described below, and the coil moving device **30** is driven based on the comparison result.

First, in order to correct the displacement of the coils **10**, **20** along the X-direction, the detection results of the magnetic sensors **50***b*, **50***c* arranged along the X-direction are

compared. The secondary coil **10** is moved by the X-axis driving unit **31***x* toward the magnetic sensor **50***c* having detected the stronger magnetic field intensity until the detection results agree. When the primary and secondary coils **10**, **20** are located on the same line parallel with the Y-direction as shown in FIG. **11**, i.e. there is no displacement along the X-direction, the magnetic sensors **50***b*, **50***c* are substantially equidistant from the secondary coil **20** (Rb=Rc) and the X-axis driving unit **31***x* stops. Subsequently, in order to correct a displacement along the Y-direction, the detection results of the magnetic sensors **50***b* (may also be **50***c*) and **50***a*, and the Y-axis driving unit **31***y* is driven in the same manner as above. Then, as shown in FIG. **12**, both sensors become substantially equidistant from the secondary coil **20** in a position where the primary and secondary coils **10**, **20** are right opposed to each other, and the Y-axis driving unit **31***y* stops.

When the main controller **12** confirms that the detection results of the three sensors **50** are substantially equal in this position (the primary coil **10** is positioned again if the detection results are substantially at variance), the motor **42** is driven to extend the pantograph **43** upward as shown in FIGS. **13** and **14**, bringing the protection casings of both coils **10**, **20** into contact. At this stage, a current value of the motor **42** is fed back to the main controller **12** so as to prevent the coils **10**, **20** from being forcibly pressed against each other. Further, upon confirmation of the contact of the coils **10**, **20** by the feedback of the current value, the primary coil **10** is excited. In the vehicle E, the charging circuit **22** confirms the completion of the charging preparation based on the voltage generated in the secondary coil **20** by the magnetic field of the primary coil **10**, and excitation of the secondary coil **20** is stopped to charge the battery **21**.

Upon completion of the charging of the battery **21**, the secondary coil **20** is excited again to generate a magnetic field. In the primary coil **10**, the resulting change of the magnetic field is detected by the magnetic sensors **50**. Then, the excitation is stopped and the primary coil **10** is lowered. Thus, the charging of one electric automotive vehicle E is completed.

If another electric automotive vehicle E is subsequently parked in the parking lot, the charging is performed by electromagnetically coupling the primary and secondary coils **10**, **20** in the same manner. Since the magnetic sensors **50** detect the position of the secondary coil **20**, every electric automotive vehicle can be coped with without labor. Therefore, for example, an unmanned parking lot for charging electric automotive vehicles may be operated.

The second embodiment is a system which adopts a self-propelled car **60** carrying a primary coil as a coil moving means to guide the primary coil to a position where it is to be electromagnetically coupled with a secondary coil. Hereafter, the content of this embodiment is described with reference to FIGS. **15** to **25**.

FIG. **15** shows an electric automotive vehicle E advancing into a parking lot equipped with the above system.

On the ground of the parking lot, the self-propelled car **60** connected with an external power supply equipment **11** is waiting on standby. The car **60** has preferably four wheels at the bottom of a flat boxlike car body **61**, and can run on the ground of the parking lot. The four wheels include larger front wheels **62** and smaller rear wheels **63** as shown in FIGS. **16** and **17**. As shown in FIG. **18**, motors **64** are connected with the front wheels **62** via speed reducers **64***a* so that the front wheels **62** can be separately driven, and casters are used as the rear wheels **63** so that the running direction can be freely changed. Accordingly, the self-propelled car **60** linearly moves if the left and right front wheels **62** are evenly driven, while the car **60** changes its direction if the front wheels **62** are differently driven.

As shown in FIG. **19**, an opening **65** is formed in the upper surface of the car body **61**. A primary coil **10** is provided in the opening **65**, and three magnetic sensors **50** are equally spaced around the opening **65**. As shown in FIG. **17**, the primary coil **10** and the magnetic sensors **50** are symmetrically arranged with respect to a center line (M in FIG. **17**) along the widthwise direction of the wheels, and one of the three magnetic sensors **50** (magnetic sensor **50***a*) is located on the center line M at the front side of the car body **61**. Similar to the first embodiment, a pantograph **43** or the like and a drive motor **42** therefor are provided in the car body **61** to move the primary coil **10** upward and downward.

Power transmission lines or signal lines of the aforementioned motors **64**, motor **42** and primary coil **10** are bundled at the rear surface of the car body **61** and connected with the external power supply equipment **11**.

Since the other construction is similar to that of the first embodiment, no description is given thereto by identifying the same parts by the same reference numerals in order to avoid repetition. Hereafter, the operation of the charging system is described.

The vehicle E is advanced into the parking lot and parked in a suitable position before or in proximity of the self-propelled car **60** waiting on the ground (FIGS. **20**, **23**). The secondary coil **20** is switched to a charging preparatory state by an operation unit of the vehicle E to generate an alternating magnetic field used for the position detection.

Then, the magnetic field extends to the three magnetic sensors **50** provided at the self-propelled car **60**, and the intensity thereof is detected by the sensors **50**. The detection results of the sensors **50** are compared by a main controller **12** as follows, and a coil moving device **30** is driven in accordance with the comparison result.

First, in order to determine a direction with respect to the secondary coil **20** on the automotive vehicle E toward which the self-propelled car **60** is advanced, the detection results of the two magnetic sensors **50***b*, **50***c* arranged at the rear part of the car body **61** (**50***b*, **50***c* refer to the magnetic sensors arranged clockwise from the magnetic sensor **50***a*) are compared. The front wheel **62** as a driving wheel of the side where the magnetic sensor **50***b* having detected the weaker magnetic field intensity is provided is driven forward until the intensity deviation becomes nil i.e. the magnetic sensors **50***b*, **50***c* detect substantially equal magnetic intensities. As a result, as shown in FIG. **21**, the self-propelled car **60** stops, facing toward the secondary coil **20**.

Subsequently, the detection results of the magnetic sensor **50***a* and the magnetic sensor **50***b* (may also be **50***c*) at the rear side of the car body **61** are compared, and the left and right front wheels **62** are driven forward until both detection results agree, thereby advancing the car **60**. As a result, as shown in FIGS. **22** and **24**, the self-propelled car **60** stops in a position where the primary and secondary coils **10**, **20** are opposed to each other.

In this position, the pantograph **43** is extended to bring the protection casings of both coils **10**, **20** substantially into contact (FIG. **25**), and the charging as mentioned above is performed. Upon completion of the charging, the drive motors **64** are driven in an order reverse of the aforementioned one to bring the car **60** back to its standby position. If another electric automotive vehicle E is subsequently parked in the parking lot, the charging is performed by

electromagnetically coupling the primary and secondary coils **10**, **20** in the same manner.

In this embodiment, it is sufficient to park the vehicle E before the self-propelled car **60** and, hence, parking is not restricted very much. Accordingly, the vehicle E can be easily parked. Further, since the car **60** can be moved to its standby position when charging is not performed, the charging facility does not take up a large space. Furthermore, this system can be installed in already existing parking facility without any large scale reconstruction.

The present invention is not limited to the foregoing embodiments. For example, embodiments described below are also embraced by the technical scope of the present invention as defined in the claims. Further, besides the following embodiments, a variety of changes can be made without departing from the spirit and scope of the present invention as defined in the claims.

(1) Coil Position Detecting Means

Although the coil position detecting means detects the position of the coil using the magnetic sensors in the foregoing embodiments, it may be, for example, such that a light source is provided at the secondary coil while a plurality of photodetectors are provided at the primary coil to detect the position of the secondary coil. Alternatively, a radio wave transmission source may be provided at the secondary coil and the position of the coil may be detected based on that. However, if the coil position detecting means taking advantage of a magnetic field is used, a magnetic field used for the position detection can be generated using a coil used for the charging. Accordingly, it is not necessary to newly provide a light source or radio wave transmission source, leading to a reduced production cost.

As described below, a plurality of magnetic sensors may not be necessary, but a single magnetic sensor may be able to guide the primary coil to the position where it is to be coupled with the secondary coil. In other words, the magnetic field intensity detected by the magnetic sensor is in inverse proportion to the distance to the secondary coil. Accordingly, the primary coil is experimentally moved in a predetermined direction by a specified distance. The primary coil is moved in the opposite direction if the magnetic field intensity detected by the magnetic sensor becomes weaker, while being further moved in the same direction if it becomes stronger, thereby making the magnetic field intensity constantly stronger. Subsequently, the primary coil is experimentally moved in a direction particularly rotated by about 90° to find a direction in which the magnetic field intensity becomes stronger. If the above operation is repeated, the primary coil approaches the secondary coil along a zigzag trail and consequently reaches the position where it is to be coupled with the secondary coil.

Further, the following arrangement enables the use of the primary coil as a magnetic sensor for the position detection. In other words, where the vehicle is parked, the secondary coil is excited with a specified frequency to generate an alternating magnetic field for the position detection. This magnetic field extends to the primary coil, thereby inducing an electromotive force of the same frequency in the primary coil. The intensity of this electromotive force is in inverse proportion to the distance between the primary and secondary coils. Accordingly, by measuring the electromotive force induced in the primary coil, the intensity of the magnetic field generated by the secondary coil can be measured and, therefore, the distance to secondary coil can be measured.

Further, the following arrangement makes it unnecessary to generate an alternating magnetic field for the position detection. Where the vehicle is parked, the secondary coil is excited with a specified frequency. Then, a magnetic flux from the primary coil links with the secondary coil, thereby generating an induced electromotive force in the secondary coil. At this stage, if a suitable load is connected with the secondary coil, a load current flows through the secondary coil and also through the primary coil by the action of mutual induction. A phase difference between the load current at the primary coil and the exciting voltage differs depending upon the degree of connection of both coils, i.e. the distance between both coils. The shorter the distance between the coils, the higher the degree of magnetic connection, i.e. the phase difference between the load current at the primary coil and the exciting voltage of the primary coil becomes smaller. Therefore, the distance between the coils can be measured by measuring the above phase difference.

(2) Coil Moving Means

Instead of the aforementioned coil moving means, for example, a manipulator **70** having two or more movable members and two or more drive shaft means, as shown in FIG. **26** may be used, and the primary coil **10** and the magnetic sensors **50** may be provided at its leading end. Such coil moving means can cope with electric automotive vehicles E in which the secondary coil is provided on one side surface or the ceiling surface thereof by changing the mount position of the manipulator **70**. Further, if the number of drive shafts of the manipulator **70** itself is increased, the above can be coped with without changing the mount position.

A coil moving means may be provided (not shown) with a telescopic arm, being in particular rotatably supported at an end opposite to an end, where the primary coil is mounted. The coil moving means may further comprise a rotatable arm being rotatably or pivotably mounted at the end, where the primary coil is mounted.

The coil moving means may not necessarily be so constructed as to move only the primary coil **10**. For example, as shown in FIG. **27**, a rotatable lever **80** as a coil moving means may be provided at the secondary coil **20** of the vehicle E so that the primary coil **10** is moved while the secondary coil **20** is moved. Further, a large displacement may be corrected by the coil moving means of the vehicle E, and fine positioning may be done by the coil moving means provided at the parking lot.

(3) Control Means

The aforementioned control means controls the coil moving means in two stages (displacement along X- and Y-directions in the first embodiment, and orientation and distance in the second embodiment) by comparing the detection results of two each of the three sensors. However, the control means may perform a continuous control by comparing the detection results of the three sensors at once without comparing in two stages, or may calculate a shortest route to a target position based on the detection results which vary as the sensors move to position the primary and secondary coils.

Hereafter, a fifth embodiment of the invention is described with reference to FIGS. **28** to **32**.

FIG. **28** shows an electric automotive vehicle E provided with a primary coil **20** which is advancing into a parking lot equipped with a secondary coil **10**.

The vehicle E includes, as a main power source, a load and/or a battery **21** which is a charging or storing device for a driving source. Upon receipt of power supplied from the battery **21**, a motor functions for driving the vehicle and a variety of electric devices. A secondary coil **20** is connected with the battery **21** via a charging circuit **22**, and the battery

21 is charged by rectifying an alternating current induced by the secondary coil **20**.

The secondary coil **20** is preferably in the form of a flat plate formed by, e.g. winding a wire around a magnetic core of ferrite, and is accommodated in a protection casing e.g. of synthetic resin. The secondary coil **20** is mounted in particular at a bottom portion of the vehicle body with the longitudinal axis of the magnetic core substantially along the vertical direction, so as to face the ground.

On the other hand, the parking lot is equipped with an external power source unit **11** used for the external charging, and a primary coil unit **10** connected with this external power source unit **11** is installed in the ground of the parking lot. As shown in FIG. **31**, the primary coil unit includes the primary coil **10** which is in the form of a flat plate formed by, e.g. winding a wire around a magnetic core of ferrite, and is accommodated in a protection casing. The primary coil **10** is supported at the leading end of a drive shaft **141** of an air cylinder **140** with the longitudinal axis of its magnetic core along the vertical direction. This air cylinder **140** is embedded in a recess C formed in the ground of the parking lot such that only the primary coil **10** projects from the ground. To the air cylinder **140** is supplied a compressed air from a compressor **143** via an electromagnetic valve **142**. By opening and closing the electromagnetic valve **142** by using an operation panel **112** provided in the external power source unit **11**, the drive shaft **141** is driven along an extension direction of the air cylinder **140**, e.g. substantially upward and downward. When the drive shaft **141** is driven downward, the primary coil **10** is located at a height where it does not or is unlikely to interfere the bottom of the vehicle E. When the driven shaft **141** is driven upward, protection casings of the coils **10**, **20** are substantially brought into contact, considerably enhancing a degree of electrical connection of the coils **10**, **20**. Since a compressed air is kept being supplied to the air cylinder **140** while the coils **10**, **20** are in contact with each other, the coils **10**, **20** are pressed against each other. The drive force of the cylinder **140** is set such that an excessively large force is not exerted on the coils **10**, **20**. Alternatively a locking means may be provided for locking the air cylinder **140** in its extended position.

Next, how the electric vehicle E is charged in this embodiment is described.

When the vehicle E is advanced into the parking lot, The drive shaft **141** of the air cylinder **140** is moved to its retracted or standby position, e.g. substantially lowered so that the primary coil **10** does not interfere with the bottom of the electric vehicle E as shown in FIGS. **28** and **30**. Next, the vehicle E is parked in a charging position, and the secondary coil **20** provided at the bottom of the vehicle E is brought to a position substantially above the primary coil **10** installed in the ground of the parking lot. Since the bottom of the vehicle E is (depending on the type of vehicle E) constantly located at a specified height from the ground of the parking lot, the coils **10**, **20** are caused to face at a specified distance from each other only by parking the vehicle E such that the primary coil **10** is located between the wheels of the vehicle E. In other words, there is no likelihood that the charging cannot be performed because the vehicle is parked with the coils **10**, **20** spaced apart for fear that the coils come into contact. Since the longitudinal axes of the magnetic cores of the respective coils **10**, **20** extend substantially along the vertical direction and the bottom of the vehicle E is substantially in parallel with the ground of the parking lot, the longitudinal axes of the magnetic cores of the coils **10**, **20** do not obliquely face whichever direction the vehicle E is oriented. In other words, the vehicle E can easily be parked for the charging by fixing a distance between the coils **10**, **20** and the orientation thereof irrespectively of how the vehicle E is parked.

After the vehicle E is parked in a specified position, the primary coil unit is operated by the operation panel **112** provided at the external power source unit **11** to move or displace the primary coil **10** by the air cylinder **140**. Then, as shown in FIGS. **31** and **32**, the secondary coil **20** and the primary coil **10** are held with the protection casings thereof in contact with each other. Since the above operation is performed below the body of the vehicle E, an obstacle or the like does not come between the coils held in contact.

After the coils **10**, **20** substantially face in contact with each other, the external power source unit **11** is operated to excite the primary coil **10**. Then, a voltage is generated in the secondary coil **20** by electromagnetic induction, and the charging circuit **22** charges the battery **21** of the vehicle E. When the battery **21** is charged to a specified degree, the excitation of the primary coil **10** is stopped and the primary coil **10** is lowered, thereby completing the charging.

Although the coil moving means is of air actuated cylinder type in this embodiment, it may include an elevating mechanism such as a parallel link mechanism **144** as shown in FIG. **33** or a pantograph mechanism **146** as shown in FIG. **34** which is driven by a motor **145** or **147**. The coil moving means including the parallel link mechanism **144** and the pantograph mechanism **146** can have a lower height as compared with the cylinder type coil moving means.

Although the supply of compressed air is continued while the coils **10**, **20** are held in contact with each other in this embodiment, the coils **10**, **20** may not necessarily be pressed against each other after being brought substantially into contact with each other. For example, a pressure sensor or the like may be provided at the primary coil **10** to detect the contact of the coils **10**, **20**, and the extension, in particular substantially upward movement of the primary coil **10** is stopped in a position of substantial contact. In such a case, the detection of the contact of the coils **10**, **20** may trigger or start the automatic activation of the external power source unit **11** for the automatic charging.

The sixth embodiment relates to a charging system for an electric automotive vehicle provided with a parking position detecting means for detecting that an electric automotive vehicle E has been parked in a charging position. Hereafter, the contents of this embodiment are described with reference to FIGS. **35** to **38**.

A primary coil **10** similar to the one in the fifth embodiment is installed in the ground of a parking lot, and a contactor pressure sensor **150** for detecting a contact or load acting from above is disposed in a recess formed in front of the primary coil **10** (left side in FIG. **36**). The pressure sensor **150** is so disposed as to be located right below front wheels when the vehicle E is parked such that the primary and secondary coils **10**, **20** face each other. In other words, the pressure sensor **150** instructs the parking position detecting means for detecting whether the vehicle E is properly parked in a charging position.

A signal line extending from the pressure sensor **150** is connected with a main controller **113** provided in an external power source unit **11** as shown in a block diagram of FIG. **36**. In accordance with a sensor signal from the pressure sensor **150**, an electromagnetic valve opening circuit **114** for actuating an air cylinder **140** and a primary power supply circuit **15** for exciting the primary coil **10** are controlled. A signalization or display means, e.g. a lamp **151** is provided at the external power source unit **11** so as to notify a driver that the vehicle E is in a proper charging position when the

pressure sensor **150** detects a load. The lamp **151** is controlled by the main controller **113** so as to turn on in response to the pressure sensor **150**. Here, a buzzer or the like may be used instead of the lamp **151**.

Since the other construction is similar to the fifth embodiment, no repetitive description is given thereon by identifying the same elements by the same reference numerals. The operation of this charging system is described hereafter.

The vehicle E is parked in the parking lot. When the vehicle E reaches the proper charging position, the front wheels of the vehicle E are positioned on the pressure sensor **150**. Accordingly, a large load acts on the pressure sensor **150**, and a sensor signal is sent to the main controller **113**. Upon the receipt of the sensor signal, the main controller **113** sets a flag indicative of, e.g. a charging enabled state, enabling a series of operations for the charging such as the driving of the air cylinder **140** and the excitation of the coil **10** as described above. If the front wheels of the vehicle E do not reach the pressure sensor **150** or pass it, no sensor signal is sent from the pressure sensor **150**, with the result that the main controller **113** determines that the vehicle E is not in the predetermined charging position and the charging is not performed. Therefore, there is no likelihood that the charging is started while the coils **10**, **20** are displaced from each other.

Although the parking position detecting means according to the sixth embodiment is such that the front wheels of the vehicle E are located on the pressure sensor **150**, it may detect the parking position by bringing a bumper of the vehicle E into contact with a limit switch or a proximity switch. Furthermore an induction sensor or an infrared sensor or a radar sensor or the like non-contact sensors may be provided to detect whether a vehicle E has reached a predetermined or predeterminable position. Further, with the parking position detecting means including the pressure sensor, projections **152** may be provided at the periphery of the recess as shown in FIG. **37** or a bevelled portion X may be formed at the periphery of a recess Y for accommodating the pressure sensor **150** as shown in FIG. **38**. Further, as shown in FIG. **39**, a stopper **153** may be provided at the parking lot, and the pressure sensor **150** may be provided on a side surface of the stopper **153** such that the wheel comes into contact therewith. With the parking position detecting means as shown in FIGS. **37** to **39**, a driver can sense from a vibration transmitted from tires that the vehicle has reached the proper charging position.

A seventh embodiment relates to a charging system for an electric automotive vehicle which guides an electric automotive vehicle to a charging position by a wheel guide. Hereafter, the contents of this embodiment are described with reference to FIGS. **40** to **42**.

FIG. **40** is a perspective view showing an electric automotive vehicle E being advanced into a parking lot equipped with a wheel guide **160**. The wheel guide **160** includes two projecting, preferably upstanding substantially L-shaped rails symmetrically arranged on the ground of the parking lot with their longer sides **160***a* faced in substantially parallel directions. The longer sides **160***a* are so spaced as to be fittingly located between the left and right wheels of the vehicle E, and have their leading ends bent such that a distance therebetween decreases toward the leading ends. Shorter sides **160***b* extend in opposite or outward directions from the longer sides **160***a* and have such a length that the front wheels of the vehicle E can come into contact therewith. Accordingly, if the vehicle E is advanced into the parking lot with the longer sides **160***a* located between the left and right wheels, it stops where the front wheels come into contact with the shorter sides **160***b*. More specifically, the vehicle E is parked while its orientation and position are determined by the wheel guide **160**.

The primary coil unit is mounted on the ground between the longer sides **160***a*. When the vehicle E is parked along the wheel guide **160**, the secondary coil **20** comes to face the primary coil **10**. Further, a pressure sensor **150** is provided at each shorter side **160***b* where the corresponding front wheel comes into contact. The pressure sensors **150** detect that the vehicle E has parked along the wheel guide **160**, and their detection results are sent to a main controller **113** provided in an external power source unit **11**.

Since the other construction is similar to the fifth to sixth embodiments, no repetitive description is given thereon by identifying the same elements by the same reference numerals. The operation of this charging system is described hereafter.

When the vehicle E is advanced into the parking lot with the longer sides **160***a* of the wheel guide **160** between the left and right wheels, it is guided with its advancing direction restricted by the longer sides **160***a*. The vehicle E cannot make any further advance when the front wheels come to positions where they are in contact with the shorter sides **160***b*, with the result that a driver can know that the vehicle E is in the charging position. When the pressure sensors **150** are pressed by the front wheels, a lamp **151** provided at the external power source unit **11** is turned on. The driver can also know from this lamp **151** that the vehicle E is in the charging position. When the vehicle E is stopped in the charging position, the secondary coil **20** is opposed to the primary coil **10**. Subsequently, in the same manner as described in the fifth embodiment, the primary coil **10** is moved to an induction position, e.g. substantially upward, to contact the secondary coil **20** and a battery of the vehicle E is charged in this state.

As described above, once that the vehicle E is brought to the wheel guide, the vehicle can easily be parked in the charging position regardless of the parking technique of the driver.

Although the wheel guide and the primary coil are separately formed and are so arranged as to have a specified positional relationship in the seventh embodiment, the primary coil and the wheel guide may be formed as a single unit and arranged in the parking lot. Further, although the left and right wheels of the vehicle E are guided in the seventh embodiment, the vehicle E may be guided by restricting the opposite side surface of the wheel of the vehicle E at one side by a narrow substantially u-shaped wheel guide **161** as shown in FIG. **41**.

Further, as shown in FIG. **42**, two U-shaped wheel guides **161** are substantially symmetrically arranged on the opposite sides of the primary coil unit so as to facilitate an advancing movement of the vehicle E into the wheel guides **161**.

An eighth embodiment relates to a charging system for an electric automatic vehicle which discriminates the type of an electric automatic vehicle E to be parked by a vehicle type discriminating apparatus and automatically adjusting the positions of wheel guides with respect to that of a primary coil **10** in accordance with the discriminated vehicle type so as to guide the vehicle to a proper charging position. Hereafter, the eighth embodiment is described with reference to FIGS. **43** and **44**.

FIG. **43** is a perspective view showing an electric automotive vehicle E being advanced into a parking lot equipped with a position adjusting apparatus for adjusting the position of wheel guides **163** and that of a primary coil **10**.

The primary coil **10** is provided in a flat box-shaped base **170** fixed to the ground of the parking lot, and is movable between an induction position and a resting or standby position, preferably substantially upward and downward by an elevating apparatus provided in the base **170**. The elevating apparatus may be constructed by a pantograph mechanism as shown in FIG. **34**, and is contained in the base **170** when the primary coil **10** is lowered.

Narrow U-shaped wheel guides **163** are so arranged at the opposite side surfaces of the base **170** as to open in the same direction. The wheel guides **163** act to guide the vehicle E to a predetermined parking position by restricting the inner and outer surfaces of wheels in the same manner as the wheel guides **161** shown in FIG. **42**. Pairs of sliding devices **171** (e.g. including an absolute encoder equipped motor and a ball screw in combination) are provided at the opposite sides in the base **170**. Drive shafts **172** of the sliding devices **171** project from the opposite side surfaces of the base **170** to be connected with the wheel guides **163** so that the wheel guides **163** are slidable along a widthwise direction, i.e. a direction at an angle different from 0° or 180°, in particular substantially normal, to the length of the base **170** or to the direction of movement of the vehicle E. Substantially at the closed end of each U-shaped wheel guide **163**, a sliding device **173** is provided. A drive shaft **174** of each sliding device **173** is connected with a contact plate **164** so that the depth of the wheel guide **163** is freely changeable. In other words, the sliding devices **171**, **173** construct the position adjusting apparatus for changing the relative positions of the primary coil **10** and the wheel guides **164**. With the sliding devices **171**, **173**, the vehicle E provided with the secondary coil **20** can be located in any desired position with respect to the base **170** provided with the primary coil **10**. Unillustrated casters are provided at the bottom surfaces of the wheel guides **163** lest no strong bending load should be exerted on the drive shafts **172**.

On the other hand, the vehicle type discriminating apparatus includes a transmitter **180** mounted on the vehicle E and a receiver **181** installed in the parking lot, and a e.g. radio or **47** infrared communication concerning the vehicle type is conducted therebetween. The receiver **181** is connected with a main controller **113** for centrally controlling this charging system via a communication controller **182** in the external power source unit **11**.

Further, as shown in FIG. **44**, a storage device **183** for storing the positional relationships of the wheels and the secondary coil for different types of vehicles is connected with the main controller **113**. The positional relationship corresponding to the received vehicle type information is fed to the main controller **113**, which in turn drives the aforementioned position adjusting apparatus to position the wheel guides **163** in conformity with each vehicle E.

Since the other construction is similar to the fifth to seventh embodiments, no repetitive description is given thereon by identifying the same elements by the same reference numerals. The operation of this charging system is described hereafter.

When the vehicle approaches the parking lot, the vehicle type information is transmitted from the transmitter **180** of the vehicle E. This vehicle type information is received by the receiver **181** installed in the parking lot and fed to the main controller **113**. The main controller **113** accesses the storage device **183** to read a positional relationship information of the wheels and the secondary coil for this vehicle type. The sliding devices **171**, **173** are driven in accordance with this positional relationship information so as to correspond the relative position of the primary coil **10** with respect to the wheel guides **163** to the positional relationship of the secondary coil at the bottom of the vehicle with respect to the wheels. The spacing between the wheel guides **163** is adjusted to the spacing between the left and right wheels of the vehicle E, enabling an advancing movement of the vehicle E to the charging position. When the vehicle E is advanced to the position where the front wheels come into contact with the contact plates **164** at the closed ends of the wheel guides **163**, the secondary coil faces the primary coil. Hereafter, a series of operations for the charging similar to those described in the fifth to seventh embodiments are performed. When an electric automotive vehicle E of another type comes to the parking lot after this vehicle E leaves, the positional relationship of the wheel guides and the primary coil is readjusted in conformity with this vehicle type.

Accordingly, this charging system enables the charging for a plurality of types of electric automotive vehicles in the same parking lot.

Although the vehicle type information is fed to the controller via the communication means in the eighth embodiment, it may be input by an input apparatus installed in a specified position of the parking lot or it may be transmitted from a data transmitter provided in a vehicle E and having a storing means for storing the positional relationship of the secondary coil **20** (with respect to a predetermined or predeterminable position on or at the vehicle E). For example, if payment boxes **190** for collecting a charging fee are installed in the parking lot as shown in FIG. **45**, the vehicle type information may be input by a number panel **191** provided at each payment box **190**. Alternatively, using a prepaid card or the like, the vehicle type information recorded therein may be input. In such a case, if the primary coil **10** is made movable while the wheel guide **163** is fixed in the parking lot, the primary and secondary coils **10**, **20** can be connectably positioned in accordance with the input vehicle type information after the vehicle E is properly parked with respect to the wheel guide **163**. The wheel guide **163** is U-shaped, and drive shafts **172** of a sliding device provided in the base **170** are connected with one side surface. Further, the wheel guide **163** is fixed to the ground, and the base **170** are fitted with casters at its bottom. Inside the base **170**, the primary coil unit including an elevating device is so supported as to be positionable by the sliding device in a direction normal to the actuating direction of the aforementioned air cylinder.

The above construction operates as follows.

The vehicle E is advanced until the wheel at one side comes into contact with the closed end of the wheel guide **163** and parked there. A pressure sensor **150** detects this contact, and a lamp **151** provided in the payment box **190** is turned on to notify the driver of its detection. The driver inputs his desired charging amount and the vehicle type by means of the number panel **191** of the payment box **190**, and pays the charging fee and parking fee. Instead of the input by the number panel **191**, the driver may input the vehicle type information and pay the fees by a prepaid card. Upon the completion of charging, the lamp **151** is turned on again to notify the driver of it. Further, if the stay exceeds the parking time, the driver may be warned by blinkingly turning the lamp **151** on.

Since the other construction is similar to the fifth to eighth embodiments, no repetitive description is given thereon by identifying the same elements by the same reference numerals.

Unlike the eighth embodiment which discriminates the vehicle type, the ninth embodiment relates to an electric

vehicle charging system which measures a positional relationship of the wheels of an electric automotive vehicle and a secondary coil **20** by a measuring apparatus and automatically adjusts the relative positions of a wheel guide **163** and a primary coil **10** in accordance with the measurement result. Hereafter, this embodiment is described with reference to FIGS. **46** and **47**.

FIG. **46** is a perspective view of an electric automotive vehicle E advancing into a parking lot equipped with the above measuring apparatus. A wheel guide **163** and a base **170** are basically same as those described in the modification (FIG. **45**) of the eighth embodiment. The ninth embodiment is further provided with a wheel position sensor **100** for detecting the position of a wheel and a coil position sensor **101** for detecting the position of a secondary coil **20**.

Both sensors **100**, **101** are formed by linearly arranging photosensors. The wheel position sensor **100** is mounted along one inner surface of the wheel guide **163**, whereas the coil position sensor **101** is embedded in the ground of the parking lot before the base **170** so as to extend in a direction normal to the advancing direction of the vehicle E. Since the secondary coil **20** of the vehicle E is provided with a reflection portion or reflection mirror (not shown) for reflecting light (or other waves or signals) emitted from the photosensors (or wave or signal emitters) so as to intensify the reflection light (or other waves or signals) more than the other part, the coil position sensor **101** can detect the position of the secondary coil **20**.

The outputs of both sensors **100**, **101** are sent to a main controller **113** provided in an external power source unit **11**, and the main controller **113** calculates a positional relationship of the wheels and the secondary coil **20** in the vehicle E based on the detection data. Specifically, as shown in FIG. **47**, the respective photosensors are numbered for data processing, and the position detection is made as follows in accordance with a flow chart of FIG. **48**.

In Step **200**, whether an amount of light or waves or signals received by the coil position sensor **101** is larger than a predetermined value K is discriminated. Upon the passage of the reflection mirror of the secondary coil **20**, the received light amount exceeds the predetermined value K. Then, the discrimination result becomes "YES", followed by Step **201**. In Step **201**, a number "i" of the contact sensor or photosensor or photosensor where the wheel passed and a number "j" of the photosensor where the received light amount was at maximum because of the passage of the reflection portion provided at the secondary coil **20** are stored in memories M, N. Subsequently, in Step **202**, drive amounts (X, Y) by which the sliding devices of the wheel guide **163** and of the primary coil **10** are read from a dimension map D(M, N) provided in the storage device **183**. The respective sliding devices are driven based on the read data in Step **203**. At this time, with the vehicle E parked in contact with the wall of the closed end of the wheel guide **163**, the secondary coil **20** is positioned right above the primary coil **10**.

After the primary coil **10** is positioned with respect to the secondary coil **20** as above, a series of operations for the charging similar to those described above are performed.

Since the other construction is similar to the fifth to eighth embodiments, no repetitive description is given thereon by identifying the same elements by the same reference numerals.

In the tenth embodiment, a coil positioning apparatus **280**, is supported inclinably with respect to the wall surface W in a substantially horizontal plane via elastic support mechanisms **290** so that the coils can automatically be positioned along the lateral direction and automatically be opposed in parallel to each other. Hereafter, the tenth embodiment is described with reference to FIGS. **49** to **53**.

The coil positioning apparatus **280** includes a laterally long housing **281** as shown in FIG. **49** or **50**. A support rail **51**, a ball screw **55** and the like are accommodated in the housing **281** so as to render the same function as the coil positioning apparatus **50** described in the fourth embodiment.

An unillustrated pressure switch **40** is provided in the housing **281** to detect that the support rail **51** provided at the front surface of the housing **281** is pressed. Further, an infrared communication device (not shown) is provided in a specified position of the lower part of the housing **281** to obtain pieces of necessary information such as a charged amount of the vehicle E.

The housing **281** is mounted on the wall surface W of the parking space via the elastic support mechanisms **290** which include each a support bracket **291** extending from the back surface of the housing **281** and a strut **292** projecting from the wall surface W of the parking space. The struts **292** of the mechanisms **290** are placed apart side by side along the horizontal direction by the same distance as the support brackets **291** of the mechanisms **290**.

As shown in FIG. **53**, the leading end of each strut **292** is substantially U-shaped and separated into two parts: upper and lower parts, and a shaft **294** is mounted through these upper and lower parts and the support bracket **291** disposed between the upper and lower parts. Through holes formed in the strut **292** through which the shaft **294** is inserted have the same diameter as the shaft **294**, but through holes formed in support bracket **291** are oblong holes so as to permit the support bracket **291** to move along forward and backward directions with respect to the shaft **294**. Accordingly, the support bracket **291** is pivotally and slidably coupled with the leading end of the strut **292** via the shaft **294**. The support bracket **291** is also inclinable because the shaft **294** can be inclined in the oblong holes.

As shown in FIG. **53**, the opposite ends of the shaft **294** are secured by, e.g. clips, nuts or the like.

The struts **292** and the support brackets **291** coupled as described above are biased in a projecting direction by compression coil springs **293** fitted thereon. Accordingly, the support brackets **291** are securely and stably held in their projected positions, and act as follows. For example, if the vehicle E is obliquely parked, one end of the bumper B comes into contact with one end of the coil positioning apparatus **280**. Thus, only the elastic support mechanism **290** at the side pressed by the bumper B slides, and the one at the other side rotates, with the result that the coil positioning apparatus **280** is inclined with respect to the wall surface W along the horizontal plane so that the bumper B of the vehicle E and the coil positioning device **280** are opposed in parallel to each other. Further, if the vehicle E is parked straight, the coil positioning apparatus **280** is equally pressed by the bumper B. Accordingly, both elastic support mechanisms **290** make a sliding movement and the shock is absorbed by the compression coil springs **293**. Further, since the elastic support mechanisms **290** are inclinable along the forward and backward directions, they are capable of bringing the coil positioning apparatus **280** and the bumper B into close contact by offsetting the inclinations of the coil positioning apparatus **280** and the bumper B along the forward and backward directions.

On the other hand, the vehicle E is provided with a secondary coil **20** at its front surface. The electromagnetic connection surface of the secondary coil **20** is oriented in conformity with a contact surface of the bumper B with the

coil positioning apparatus **280**. Accordingly, if the coil positioning apparatus **280** and the bumper B are opposed in parallel to each other as described above, the electromagnetic connection surfaces of the coils **10, 20** are opposed in parallel to each other. Further, since the coil positioning apparatus **280** is inclinable along the forward and backward directions as described above, if the contact surface of the bumper B is inclined, the electromagnetic connection surface of the secondary coil **20** may be accordingly inclined.

Since the other construction is similar to the fourth embodiment, no repetitive description is given thereon by identifying the same elements by the same reference numerals.

Next, how the vehicle E is charged according to the tenth embodiment is described. The vehicle E is advanced in the parking space to bring the bumper B into contact with the coil positioning apparatus **280** projecting from the wall surface W. The vehicle E is stopped when a stop lamp **241** is turned on in response to a pressure switch **240**. At this time, even if the vehicle E comes into contact with the coil positioning apparatus **280** along an oblique direction, the elastic support mechanisms **290** act to offset the resulting inclination, thereby allowing the bumper B of the vehicle E to face the coil positioning apparatus **280** substantially straight. Accordingly, the driver needs not consider an angle of the vehicle with respect to the coil positioning apparatus **280**. Thus any inclination of the vehicle E with respect to the coil positioning apparatus **280** can be compensated for.

Simultaneously, the coil positioning apparatus **280** starts operating in response to the pressure switch **240**, thereby guiding the primary coil **10** to a position where it is electromagnetically connectable with the secondary coil **20** in the same manner as in the fourth embodiment for the charging. At this time, since the bumper B of the vehicle E and the coil positioning apparatus **280** face substantially straight each other, the coils **10, 20** can constantly brought to their proper electromagnetically connectable positions. Therefore, the charging can efficiently be performed.

The electrical construction of the connection or charging system according to an eleventh embodiment of the invention may be as shown in FIG. **54**. A power supply circuit **244** provided in the parking space is connected with the primary coil **10**. The power supply circuit **244** supplies a high frequency current of, e.g. 40 kHz to the primary coil **10** by suitably shaping, e.g. by rectifying and/or switching a commercial power source **245**. A vehicle position detecting circuit **246** detects that the vehicle E has parked in the specified position upon receipt of a signal from the pressure switch **240**. Based on this detection, the detecting circuit **246** turns the stop lamp **241** on and outputs a vehicle detection signal Sev to a charging control circuit **247**. Upon receipt of the signal Sev from the vehicle position detecting circuit **246** and a capacity shortage signal Scg from a communication control circuit **248**, the charging control circuit **247** actuates the power supply circuit **244** to excite the primary coil **10**. The communication control circuit **248** is connected with the infrared communication device **242**, and receives an information concerning the charging from a capacity detecting circuit via the infrared communication device **215** and a communication control circuit **216** of the vehicle E.

On the other hand, in the vehicle E, a charging circuit **218** is connected with the secondary coil **20** to charge a battery **219**. The charging circuit **218** rectifies an ac current induced in the secondary coil **20** and generates a dc voltage necessary to charge the battery **219**. A motor driving circuit **221** is connected with the battery **219** via a main switch **220** for driving a drive motor **222** of the vehicle E. A remaining capacity detecting circuit **217** receives an information concerning the remaining capacity of the battery **219** via an output line of the battery **219**. For example, the remaining capacity detecting circuit **217** estimates the remaining capacity of the battery **219** by adding up consumed power based on the current having flowed in the output line, and outputs the capacity shortage signal Scg when the estimated remaining capacity falls short of a predetermined value. The remaining capacity detecting circuit **217** also receives, from the charging circuit **218**, an information concerning a charge current flowed into the battery **219**; estimates a remaining capacity increasing by the charging based on the received information; and stops outputting the capacity shortage signal Scg when the estimated remaining capacity reaches the predetermined rated value. Alternatively the remaining capacity detecting circuit **217** may directly measure the remaining capacity of the battery **219**, e.g. basing upon variations of inductance or capacity of the battery **219**. The remaining capacity detecting circuit **217** may also measure a temperature of the battery **219** for determining the remaining capacity, at least as a factor for such a determination.

Next, how the vehicle E is charged in this embodiment is described. The vehicle E is slowly advanced toward the wall surface W in the parking space. When the vehicle E comes to a position where the primary coil unit **10** is coupleable or connectable with the secondary coil unit **20**, the front bumper B of the vehicle E may press the pressure switch **240**, thereby operating the same. Accordingly, the stop lamp **241** is turned on in response to the signal from the vehicle position detecting circuit **246**. If the vehicle E is stopped in this position, the primary coil **10** is substantially coaxially located with the secondary coil **20** in the receptacle **211**, being enabled to be electromagnetically connected with the secondary coil **20**.

Simultaneously, the vehicle position detecting circuit **246** outputs the vehicle detection signal Sev to the charging control circuit **247**. At this time, unless the remaining capacity of the battery **219** exceeds the predetermined value, the capacity shortage signal Scg is sent to the charging control circuit **247** from the remaining capacity detecting circuit **217** via the infrared communication devices **215, 242**, with the result that the power supply circuit **244** operates to excite the primary coil **10**. As a result, a voltage is generated in the secondary coil **20** by an electromagnetic induction phenomenon, and the charging circuit **218** charges the battery **219** of the vehicle E with the generated voltage. When the remaining capacity of the battery **219** reaches the predeterminable or predetermined rated value by the charging, the output of the capacity shortage signal Scg is stopped. Thus, the excitation of the primary coil **10** by the charging circuit **218** is stopped, completing the charging.

According to this embodiment, the primary and secondary coils **10, 20** are connected only by a usual action of parking the vehicle E in the specified position of the parking space, garage, parking lot, gas station, or the like, and power is supplied to the charging circuit **218** of the vehicle E from the commercial power source **245** in the parking space to charge the battery **219**, completely obviating need for the engagement of the connectors as in the prior art. Therefore, the charging system according to this embodiment enables a remarkably easy charging and is also very suited to the use at home.

The twelfth embodiment is similar to the eleventh embodiment except that a display means for displaying a charged state corresponding to the remaining capacity of the battery **219** is additionally provided in the parking space. Accordingly, no repetitive description is given on the iden-

tical or similar construction by identifying the same elements by the same reference numerals, and only a different construction is described with reference to FIG. **55**.

At an upper part of the wall surface W of the parking space, there is provided a display unit **260** which is controllably turned on by a display control circuit **261**. The display unit **260** includes a stop lamp **241** and a remaining capacity indicator **262** formed e.g. by vertically arranging a plurality of LEDs.

A remaining capacity detecting circuit **263** provided in an electric automotive vehicle E constantly detects the remaining capacity of a battery **219** being charged and sends the detection data to the display control unit **261** via infrared (or the like) communication devices **215**, **242** to make a display corresponding to the detected remaining capacity in the capacity indicator **262**. In other words, a display in proportion to the remaining capacity is made in this embodiment: all LEDs of the capacity indicator **262** are turned on when the battery **219** is fully charged, and half the number of LEDs are turned on when the battery **219** is half charged. Such a display is convenient because the remaining capacity of the battery **219** being charged is easily visible.

The thirteenth embodiment is similar to the eleventh embodiment except that the charging is performed only when identification (ID) codes of the vehicle agree. Accordingly, no repetitive description is given on the identical or similar construction by identifying the same elements by the same reference numerals, and only a different construction is described with reference to FIG. **56**.

An electric automotive vehicle E is provided with an ID code transmitting circuit **270** which is connected with a communication control circuit **216**. In a parking space, there is provided an ID code checking circuit **271** which is connected with a communication control circuit **248** and a charging control circuit **247**. Upon receipt of a vehicle detection signal Sev from a vehicle position detecting circuit **246**, the ID checking circuit **271** sends a signal to the ID transmitting circuit **270** of the vehicle E via infrared communication devices **215**, **242**, causing the ID transmitting circuit **270** to respond by sending an ID code peculiar to the vehicle E via the infrared communication devices **215**, **242**. If the received ID code agrees with the code stored in the ID code checking circuit **271**, the ID code checking circuit **271** outputs an agreement signal Ssm to the charging control circuit **247**. In this embodiment, the charging control circuit **247** starts the excitation of the primary coil **10** on condition that it received the vehicle detection signal Sev, the capacity shortage signal Scg and the agreement signal Ssm.

By constructing the charging system as above, the charging is not started unless the ID code from the vehicle E agrees with the ID code stored in advance in the ID code checking circuit **271**. Accordingly, a possibility that the other's car parked in the parking space is charged, or the other's car is intruded into the parking space and charged without permission can securely be prevented.

What is claimed is:

1. A connection system for charging a battery **(21)** of an electric automotive vehicle (E) used to drive the vehicle (E), comprising: a primary coil **(10)** disposed externally of the vehicle (E) and being connectable with an external power source **(11)**; a secondary coil **(20)** disposed on the vehicle **(11)** and being connectable with the battery **(21)**, said secondary coil **(20)** being operative for generating an alternating magnetic field by being excited in a specified cycle; a plurality of magnetic sensors **(50)** concentrically disposed around said primary coil **(10)**, said magnetic sensors **(50)** being equally spaced from one another, and each being operative for detecting intensity of the alternating magnetic field generated by the secondary coil **(20)**; and coil moving means **(30; 60; 70)** for moving the primary coil **(10)** and the magnetic sensors **(50)** in unison until each of the magnetic sensors **(50)** detects a substantially identical intensity of magnetic field indicative of substantial registration of said primary and secondary coils, wherein the primary coil **(10)** is electromagnetically coupleable with the secondary coil **(20)** for inducing a current in the secondary coil **(20)**.

2. A connection system according to claim **1**, wherein the coil moving means **(30; 43; 60; 70)** has a driving device **(36; 64)** for moving the primary coil **(10)** to a desired position.

3. A connection system according to claim **2**, further comprising a control means **(12; 113)** for controlling the driving device **(36; 64)** of the coil moving means **(30; 60; 70)** based on a detection result of the magnetic sensors **(50)** to position the primary coil **(10)** in a predeterminable positional relationship with respect to the secondary coil **(20)** and to guide the primary coil **(10)** to a position where the coils **(10; 20)** are to be electromagnetically coupled.

4. A connection system according to claim **2**, wherein the coil moving means **(30)** comprises:

a body **(40)**, on a ground of a parking area to support the primary coil **(10)**,

X-axis driving means **(31X–36X)** for linearly moving the body **(40)** along a specified direction (X), and

Y-axis driving means **(31Y–36Y)** for linearly moving the body **(40)** along a direction arranged at an angle different from 0° and 180° with respect to the moving direction (X) of the body **(40)** by the X-axis driving means **(31X–36X)**.

5. A connection system according to claim **2**, wherein the coil moving means **(60)** comprises:

a body **(60)** for supporting the primary coil **(10)**,

at least one wheel **(62, 63)** mounted on the body **(60)** to drive the body **(60)** on the ground, and

driving mechanism **(64)**, to drive the wheel **(62, 63)**.

6. A connection system according to claim **2**, wherein the primary coil **(10)** and the coil moving means **(30; 43; 60; 70** are provided on a wall surface of a parking lot, the parking lot having a ground surface for supporting the vehicle (E), and the wall surface being substantially normal to the ground surface, the coil moving means moving the primary coil **(10)** along at least one direction, including a direction substantially parallel to the ground surface.

7. A connection system according to claim **6**, wherein the coil moving means is provided on a coil positioning apparatus **(280)** supported by an elastic support means **(290)** on the wall surface (W), the elastic support means **(290)** allowing for an elastic positioning of the coil positioning apparatus **(280)** in dependence of a side wall portion of the vehicle (E), for achieving a connection of the primary and secondary coils **(10; 20)**.

8. A connection system according to claim **2**, wherein the coil moving means **(30; 43; 60; 70)** is selected from the group consisting of a pantograph mechanism **(43)**, a ball screw mechanism and an fluid cylinder mechanism.

9. A connection system according to claim **1**, wherein the at least one magnetic sensor **(50*a*–50*c*)** is selected from the group consisting of at least one coil, at least one Hall probe and at least one magnetoresistant device.

10. A connection system according to claim **1**, wherein a charging control circuit **(247)** for controlling the exciting of the primary coil **(10)** comprises a remaining capacity detecting means **(263)** for detecting a remaining capacity of the battery **(21)**, and means for exciting the primary coil **(10)** on

condition that the remaining capacity detected by the remaining capacity detecting means (**263**) is not greater than a predetermined or predeterminable value.

11. A connection system according to claim **10**, wherein a display means (**260**;**262**;**241**) for displaying a charging state corresponding to the remaining capacity of the battery (**21**) is provided.

12. A connection system according to claim **1**, further comprising an identification code transmitting means (**270**) provided in connection with the secondary coil (**20**) in the vehicle (E), and an identification code checking means (**271**) is provided in connection with the primary coil (**10**) for comparing an identification code received from the identification code transmitting means (**270**) with a prestored identification code, wherein a charging control circuit (**247**) excites the primary coil (**10**) on condition that the identification codes compared by the identification code checking means (**271**) agree.

13. A connection system for charging a battery (**21**) of an electric automotive vehicle (E) used to drive the vehicle (E), comprising: a primary coil (**10**) spaced from the vehicle and connectable with an external power source (**11**), a secondary coil (**20**) mounted on the vehicle (E) and connectable with the battery (**21**), at least one wheel guide (**160**; **163**) which is so provided as to have a predeterminable positional relationship with respect to the primary coil (**10**), at least one wheel of the vehicle (E) being guidable by the wheel guide (**160**; **163**) to an electromagnetic connection position, where the secondary coil (**20**) of the vehicle (E) is electromagnetically connectable with the primary coil (**10**), switch means (**150**) in proximity to the wheel guide (**160**; **163**) for generating a signal indicative of proper positioning of the vehicle (E) relative to the wheel guide (**160**; **163**), and coil moving means (**140**, **141**; **144**, **145**; **146**, **147**) responsive to activation of the switch means (**150**) for moving the primary coil (**10**) into coupling position relative to the secondary coil (**20**) for inducing a current in the secondary coil (**20**).

14. A connection system according to claim **13**, further comprising:

a position adjusting apparatus (**171**; **173**) for differing or adjusting relative positions of the wheel guide (**160**; **163**) and the primary coil (**10**), and

a vehicle type discriminating apparatus (**180**; **181**) for discriminating a type of the vehicle (E) to be parked,

wherein in particular the secondary coil (**20**) of the vehicle (E) and the primary coil (**10**) are guided to the electromagnetic connection position by driving the position adjusting apparatus (**170**; **171**) in accordance with the vehicle type discriminated by the vehicle type discriminating apparatus (**180**; **181**).

15. A connection method for charging a battery (**21**) of an electric automotive vehicle (E) used to drive the vehicle (E), comprising the steps of:

providing a primary coil (**10**) connected with an external power source (**11**) and a secondary coil (**20**) connected with a battery (**21**), the secondary coil being operative to generate an alternating magnetic field by being excited in a specified cycle, a plurality of magnetic sensors (**50***a*–**50***c*) being mounted concentrically around the primary coil (**10**) in fixed spaced relationship to one another, the magnetic sensors (**50***a*–**50***c*) each being operative for detecting the magnetic field intensity of the secondary coil (**20**);

exciting the secondary coil (**20**) at a specified frequency;

detecting magnetic field intensities from the secondary coil (**20**) with each of said magnetic sensors (**50***a*–**50***c*);

analyzing the detection signals of the magnetic sensors (**50***a*–**50***c*) for determining positional relationships (Ra–Rc) of each of said magnetic sensors (**50***a*–**50***c*) relative to said secondary coil (**20**);

automatically moving the primary coil (**10**) into a positional relationship where the detection signals of the magnetic sensors (**50***a*–**50***c*) are substantially equal to one another;

moving said positioned primary coil (**20**) toward the secondary coil (**20**) and into electromagnetic coupled engagement therewith; and

inducing a current from the primary coil (**10**) in the secondary coil (**20**).

* * * * *