US 20090040068A1

(19) United States

(12) Patent Application Publication

(10) Pub. No.: US 2009/0040068 A1

(43) Pub. Date: Feb. 12, 2009

Oyobe et al.

(54) **PARKING ASSIST DEVICE AND A METHOD FOR ELECTRIC POWER TRANSMISSION AND RECEPTION BETWEEN A VEHICLE AND A GROUND APPARATUS**

(75) Inventors: **Hichirosai Oyobe**, Toyota-shi (JP); **Makoto Nakamura**, Okazaki-shi (JP)

Correspondence Address:
**OLIFF & BERRIDGE, PLC**
**P.O. BOX 320850**
**ALEXANDRIA, VA 22320-4850 (US)**

(73) Assignee: **TOYOTA JIDOSHA KABUSHIKI KAISHA**, Toyota-shi (JP)

(21) Appl. No.: **11/992,386**

(22) PCT Filed: **Aug. 31, 2006**

(86) PCT No.: **PCT/JP2006/317710**

§ 371 (c)(1), (2), (4) Date: **Mar. 21, 2008**

(30) **Foreign Application Priority Data**

Sep. 29, 2005 (JP) ..... 2005-285147

**Publication Classification**

(51) **Int. Cl.**
*B60Q 1/48* (2006.01)

(52) **U.S. Cl.** ..... **340/932.2**

(57) **ABSTRACT**

A parking assist device has a touch display (**58**) including a display unit for displaying a situation around a vehicle and an input unit for entering a target parking position of a vehicle, and also has a control device (**60**) performing parking assist control by calculating a path according to the target parking position. The control device (**60**) further performs, under a predetermined condition, assist control for position alignment of a vehicle-side power transmission/reception unit placed on the vehicle with an apparatus-side power transmission/reception unit of an apparatus placed on a ground. Preferably, the parking assist device further has a back monitor camera (**53**) for taking an image of a surrounding situation of the vehicle. When an identifier indicating the apparatus-side power transmission/reception unit is present in the vicinity of the target parking position in the taken surrounding situation, the control device (**60**) recognizes the position of the identifier and performs the position alignment assist control.

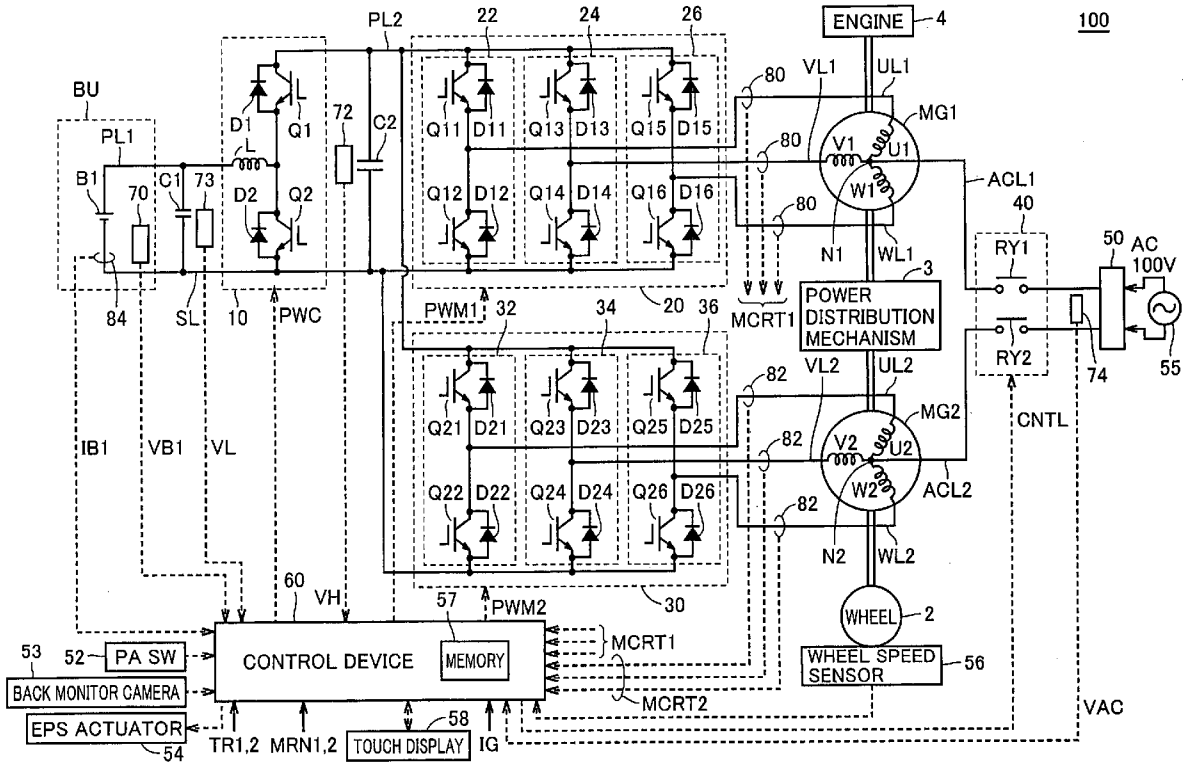

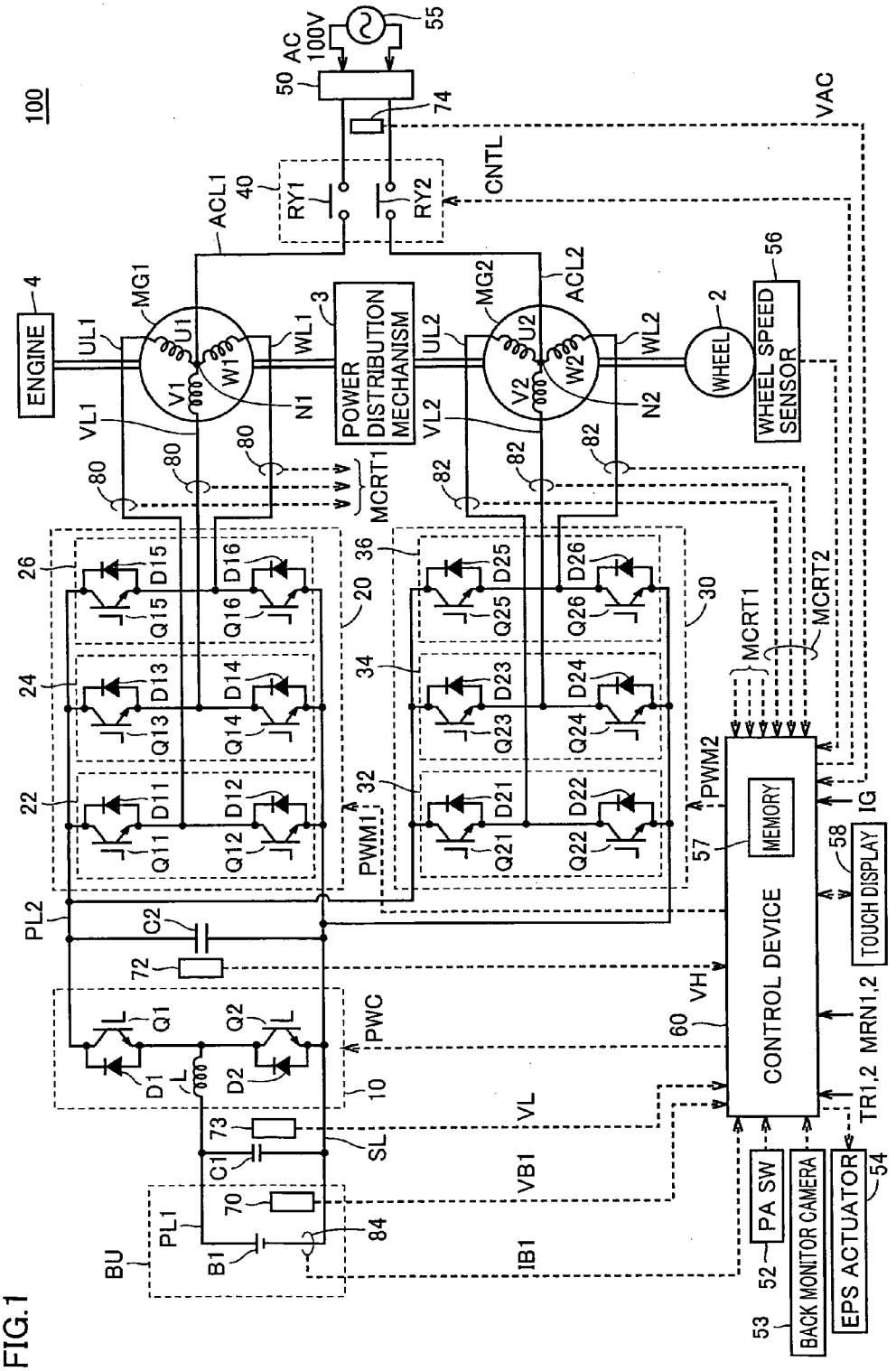
100
ENGINE
4
UL1
MG1
U1
V1
W1
WL1
3
POWER DISTRIBUTION MECHANISM
UL2
MG2
U2
V2
W2
WL2
2
WHEEL
WHEEL SPEED SENSOR
56
VL1
N1
VL2
N2
ACL1
40
ACL2
RY1
RY2
CNTL
50
AC 100V
55
74
VAC
80
82
MCRT1
MCRT2
26
24
22
D15
Q15
D16
Q16
D13
Q13
D14
Q14
D11
Q11
D12
Q12
20
36
34
32
D25
Q25
D26
Q26
D23
Q23
D24
Q24
D21
Q21
D22
Q22
30
PWM1
PWM2
57
MEMORY
CONTROL DEVICE
60
VH
58
TOUCH DISPLAY
IG
MRN1,2
TR1,2
PL2
C2
72
Q1
Q2
D1
D2
L
PWC
10
73
C1
SL
VL
VB1
IB1
70
84
PL1
B1
BU
PA SW
52
BACK MONITOR CAMERA
53
EPS ACTUATOR
54

FIG.1

FIG.2

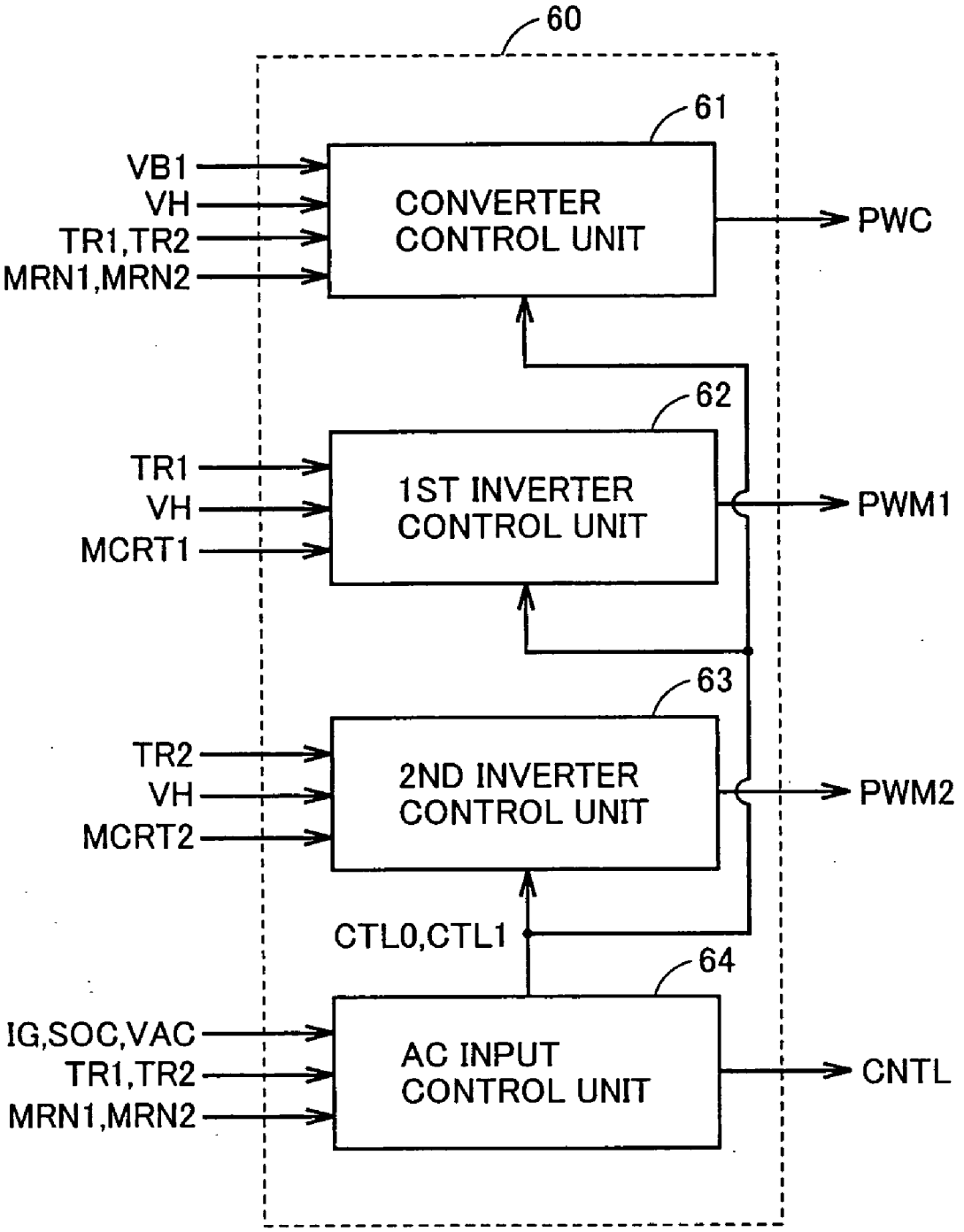
60
61
VB1
VH
TR1,TR2
MRN1,MRN2
CONVERTER CONTROL UNIT
PWC
62
TR1
VH
MCRT1
1ST INVERTER CONTROL UNIT
PWM1
63
TR2
VH
MCRT2
2ND INVERTER CONTROL UNIT
PWM2
CTL0,CTL1
64
IG,SOC,VAC
TR1,TR2
MRN1,MRN2
AC INPUT CONTROL UNIT
CNTL

FIG.3

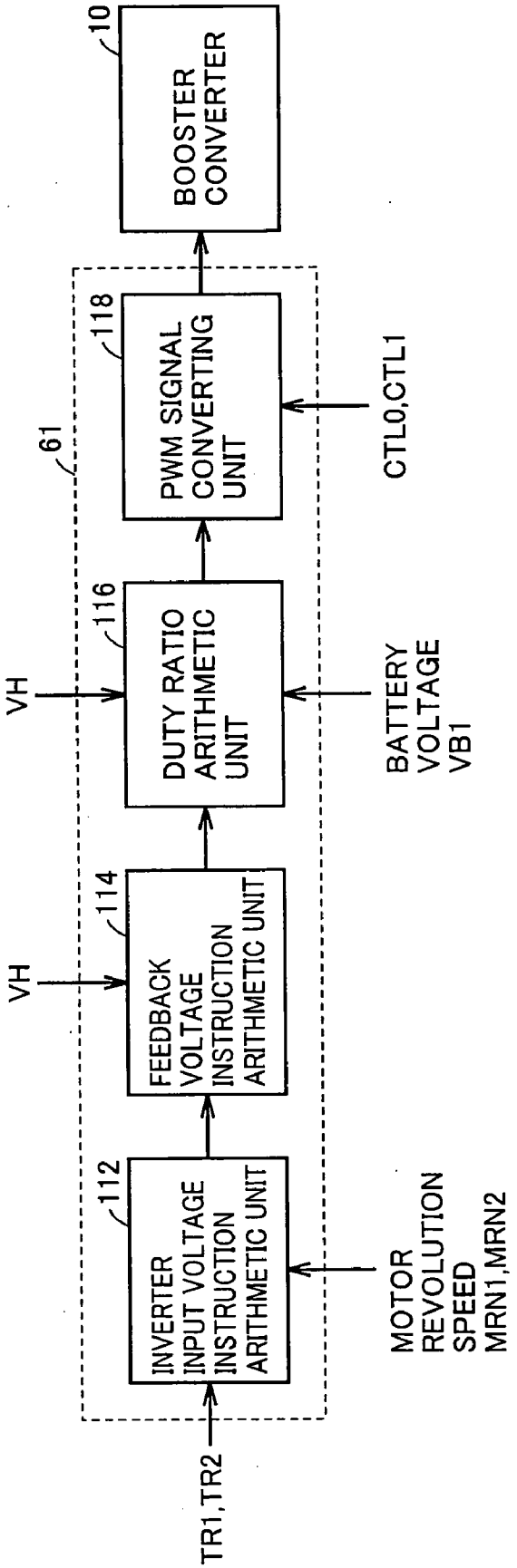
TR1,TR2
61
112
INVERTER INPUT VOLTAGE INSTRUCTION ARITHMETIC UNIT
MOTOR REVOLUTION SPEED MRN1,MRN2
VH
114
FEEDBACK VOLTAGE INSTRUCTION ARITHMETIC UNIT
VH
116
DUTY RATIO ARITHMETIC UNIT
BATTERY VOLTAGE VB1
118
PWM SIGNAL CONVERTING UNIT
CTL0,CTL1
10
BOOSTER CONVERTER

FIG.4

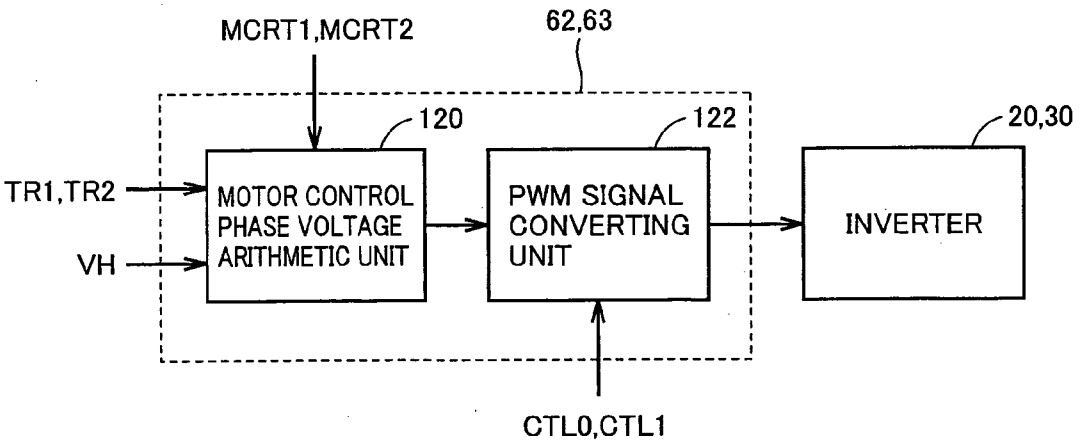
MCRT1,MCRT2
62,63
120
122
20,30
TR1,TR2
VH
MOTOR CONTROL PHASE VOLTAGE ARITHMETIC UNIT
PWM SIGNAL CONVERTING UNIT
INVERTER
CTL0,CTL1

FIG.5

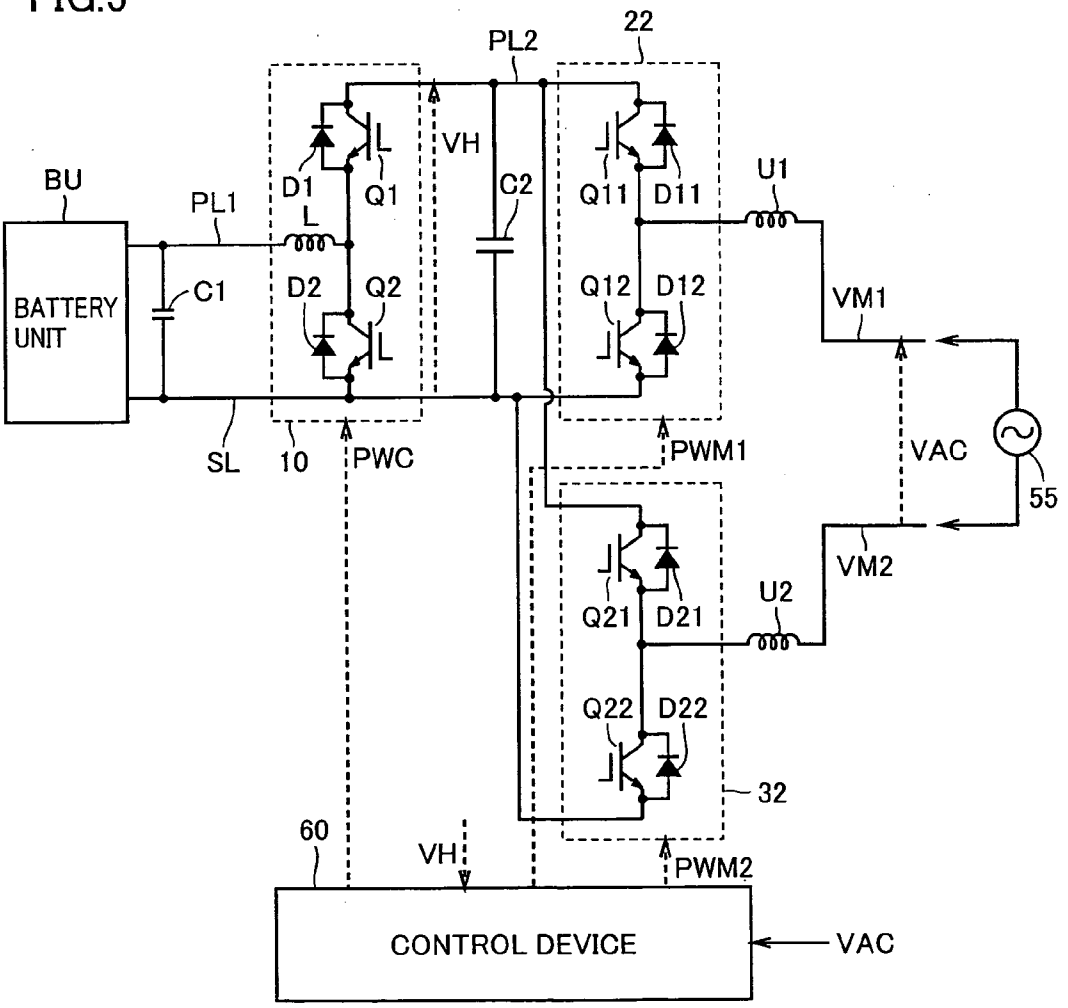
22
PL2
BU
PL1
D1
Q1
VH
C2
Q11
D11
U1
L
BATTERY UNIT
C1
D2
Q2
Q12
D12
VM1
SL
10
PWC
PWM1
VAC
55
VM2
Q21
D21
U2
Q22
D22
32
60
VH
PWM2
CONTROL DEVICE
VAC

FIG.6

| CONTROL IN CHARGE OPERATION | BOOSTER CONVERTER | | 1ST INVERTER | | 2ND INVERTER | |
|---|---|---|---|---|---|---|
| | Q1 | Q2 | Q11 | Q12 | Q21 | Q22 |
| VAC> 0:(VM1>VM2) | ON | OFF | OFF OR SWITCHING | SWITCHING | OFF | ON |
| VAC< 0:(VM1<VM2) | ON | OFF | OFF | ON | OFF OR SWITCHING | SWITCHING |

FIG.7

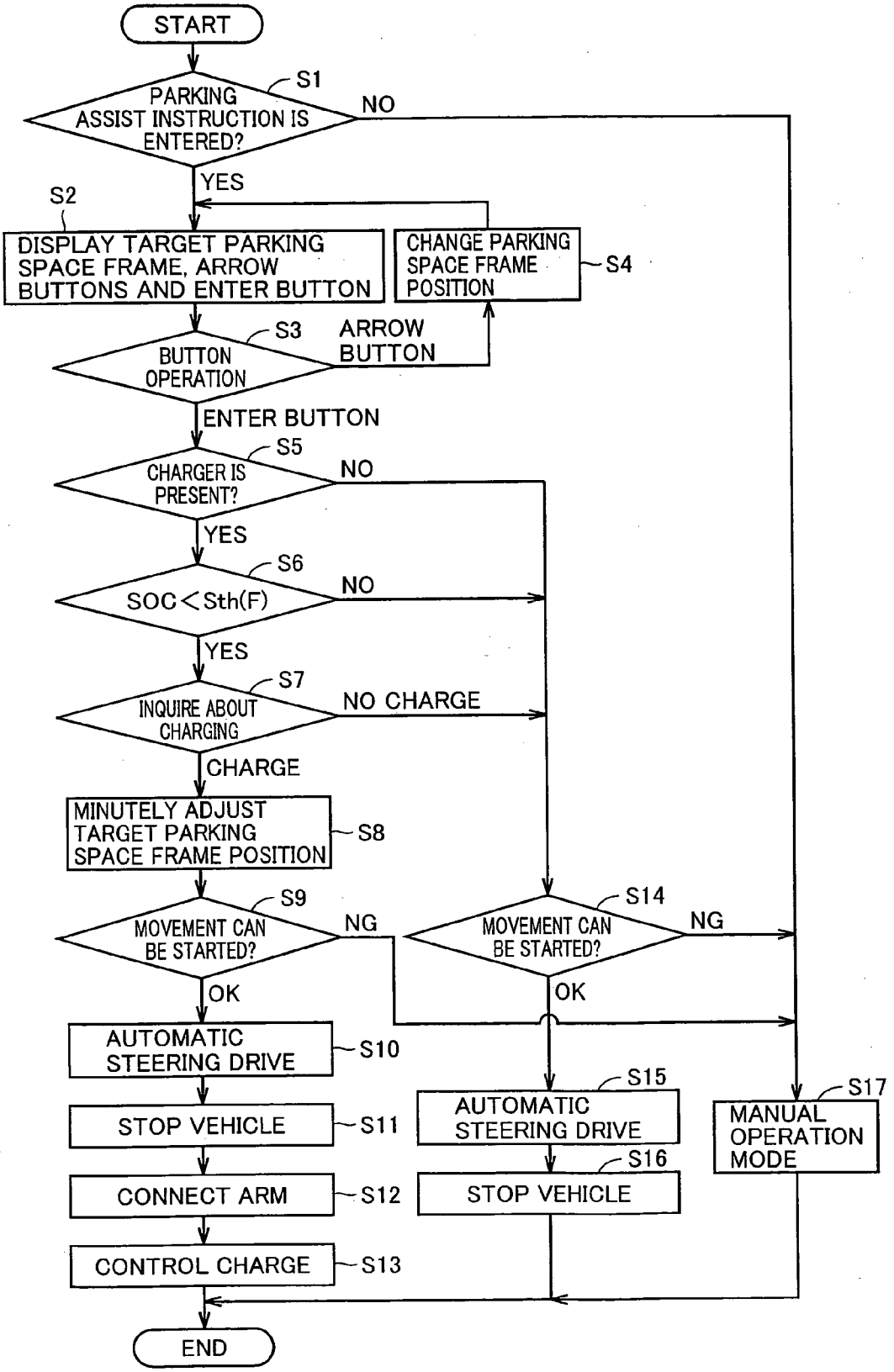
START
S1
PARKING ASSIST INSTRUCTION IS ENTERED?
NO
YES
S2
DISPLAY TARGET PARKING SPACE FRAME, ARROW BUTTONS AND ENTER BUTTON
CHANGE PARKING SPACE FRAME POSITION
S4
S3
BUTTON OPERATION
ARROW BUTTON
ENTER BUTTON
S5
CHARGER IS PRESENT?
NO
YES
S6
SOC<Sth(F)
NO
YES
S7
INQUIRE ABOUT CHARGING
NO CHARGE
CHARGE
MINUTELY ADJUST TARGET PARKING SPACE FRAME POSITION
S8
S9
MOVEMENT CAN BE STARTED?
NG
OK
S14
MOVEMENT CAN BE STARTED?
NG
OK
AUTOMATIC STEERING DRIVE
S10
STOP VEHICLE
S11
CONNECT ARM
S12
CONTROL CHARGE
S13
S15
AUTOMATIC STEERING DRIVE
S16
STOP VEHICLE
S17
MANUAL OPERATION MODE
END

FIG.8

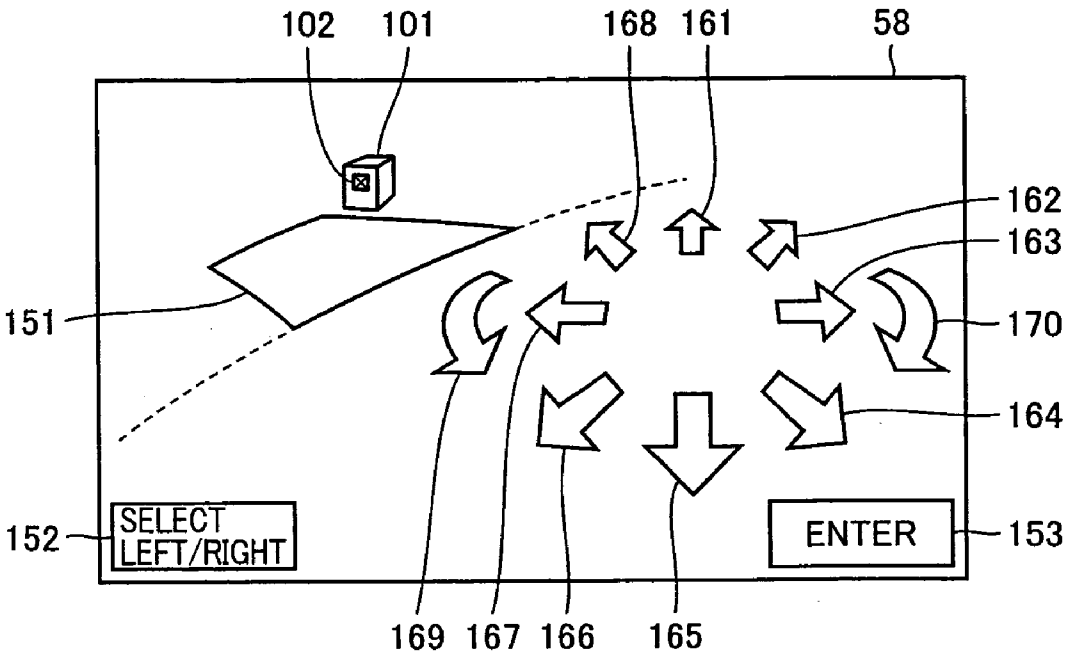
102
101
168
161
58
162
163
151
170
164
152
SELECT
LEFT/RIGHT
ENTER
153
169
167
166
165

FIG.9

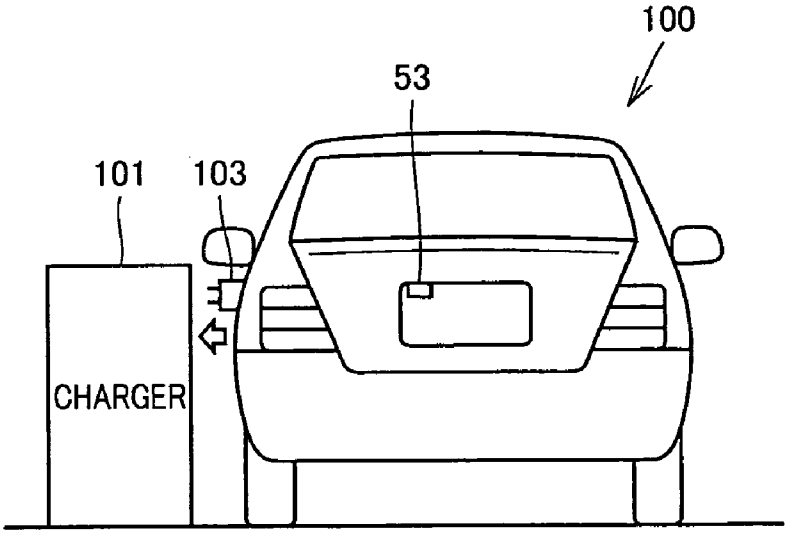
100
53
101
103
CHARGER

FIG.10

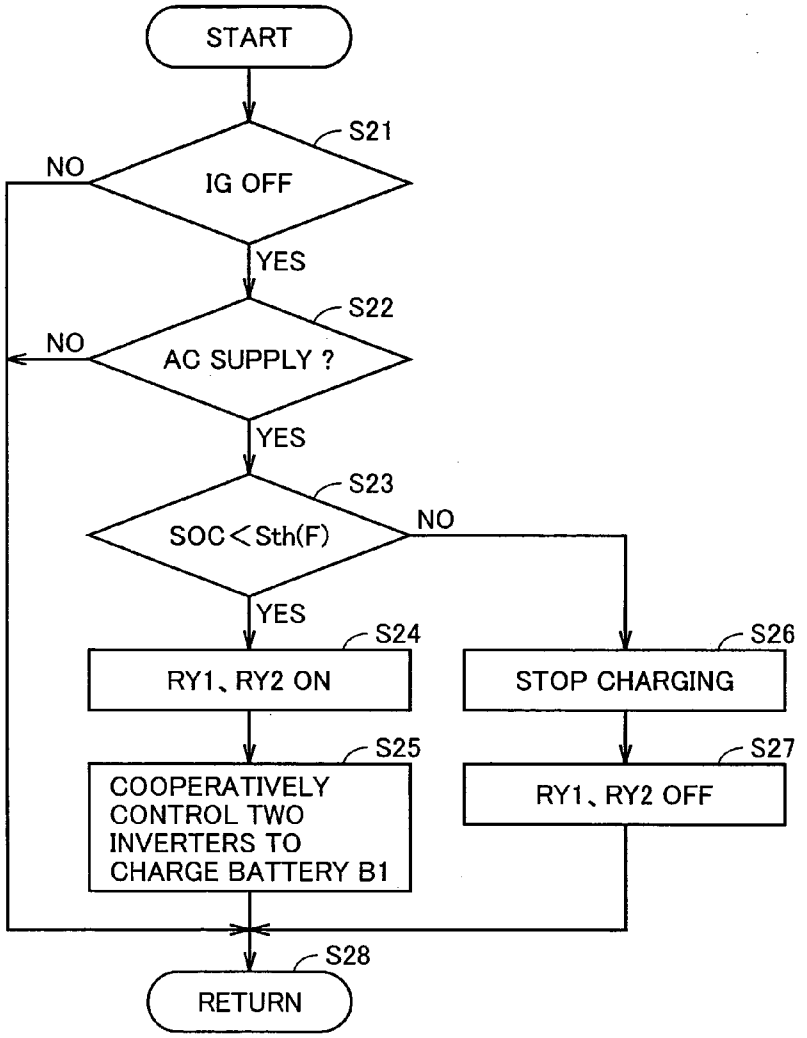
START
S21
IG OFF
NO
YES
S22
AC SUPPLY ?
NO
YES
S23
SOC<Sth(F)
NO
YES
S24
RY1、RY2 ON
S25
COOPERATIVELY CONTROL TWO INVERTERS TO CHARGE BATTERY B1
S26
STOP CHARGING
S27
RY1、RY2 OFF
S28
RETURN

FIG.11

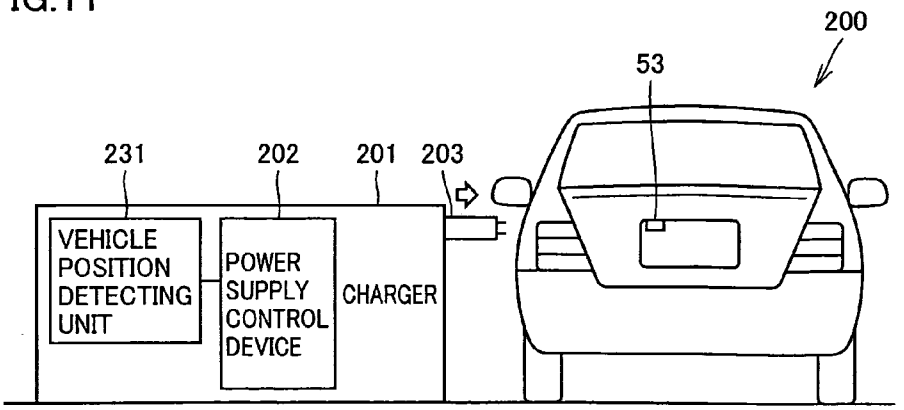
200
53
231
202
201
203
VEHICLE POSITION DETECTING UNIT
POWER SUPPLY CONTROL DEVICE
CHARGER

FIG.12

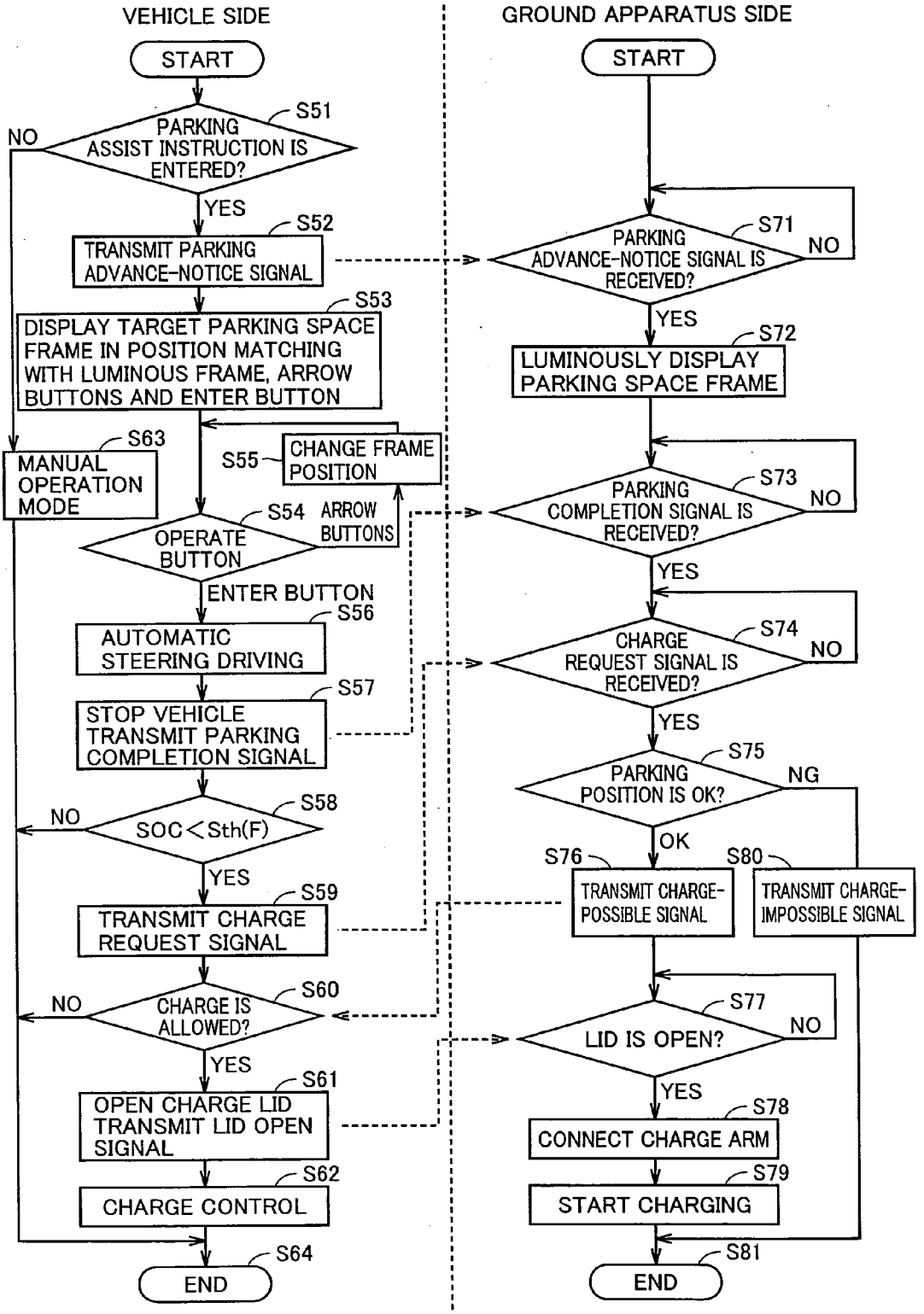
VEHICLE SIDE
GROUND APPARATUS SIDE
START
S51
PARKING ASSIST INSTRUCTION IS ENTERED?
NO
YES
S52
TRANSMIT PARKING ADVANCE-NOTICE SIGNAL
S53
DISPLAY TARGET PARKING SPACE FRAME IN POSITION MATCHING WITH LUMINOUS FRAME, ARROW BUTTONS AND ENTER BUTTON
S63
MANUAL OPERATION MODE
S55
CHANGE FRAME POSITION
S54
OPERATE BUTTON
ARROW BUTTONS
ENTER BUTTON
S56
AUTOMATIC STEERING DRIVING
S57
STOP VEHICLE TRANSMIT PARKING COMPLETION SIGNAL
S58
SOC<Sth(F)
NO
YES
S59
TRANSMIT CHARGE REQUEST SIGNAL
S60
CHARGE IS ALLOWED?
NO
YES
S61
OPEN CHARGE LID TRANSMIT LID OPEN SIGNAL
S62
CHARGE CONTROL
S64
END
START
S71
PARKING ADVANCE-NOTICE SIGNAL IS RECEIVED?
NO
YES
S72
LUMINOUSLY DISPLAY PARKING SPACE FRAME
S73
PARKING COMPLETION SIGNAL IS RECEIVED?
NO
YES
S74
CHARGE REQUEST SIGNAL IS RECEIVED?
NO
YES
S75
PARKING POSITION IS OK?
NG
OK
S76
TRANSMIT CHARGE-POSSIBLE SIGNAL
S80
TRANSMIT CHARGE-IMPOSSIBLE SIGNAL
S77
LID IS OPEN?
NO
YES
S78
CONNECT CHARGE ARM
S79
START CHARGING
S81
END

FIG.13

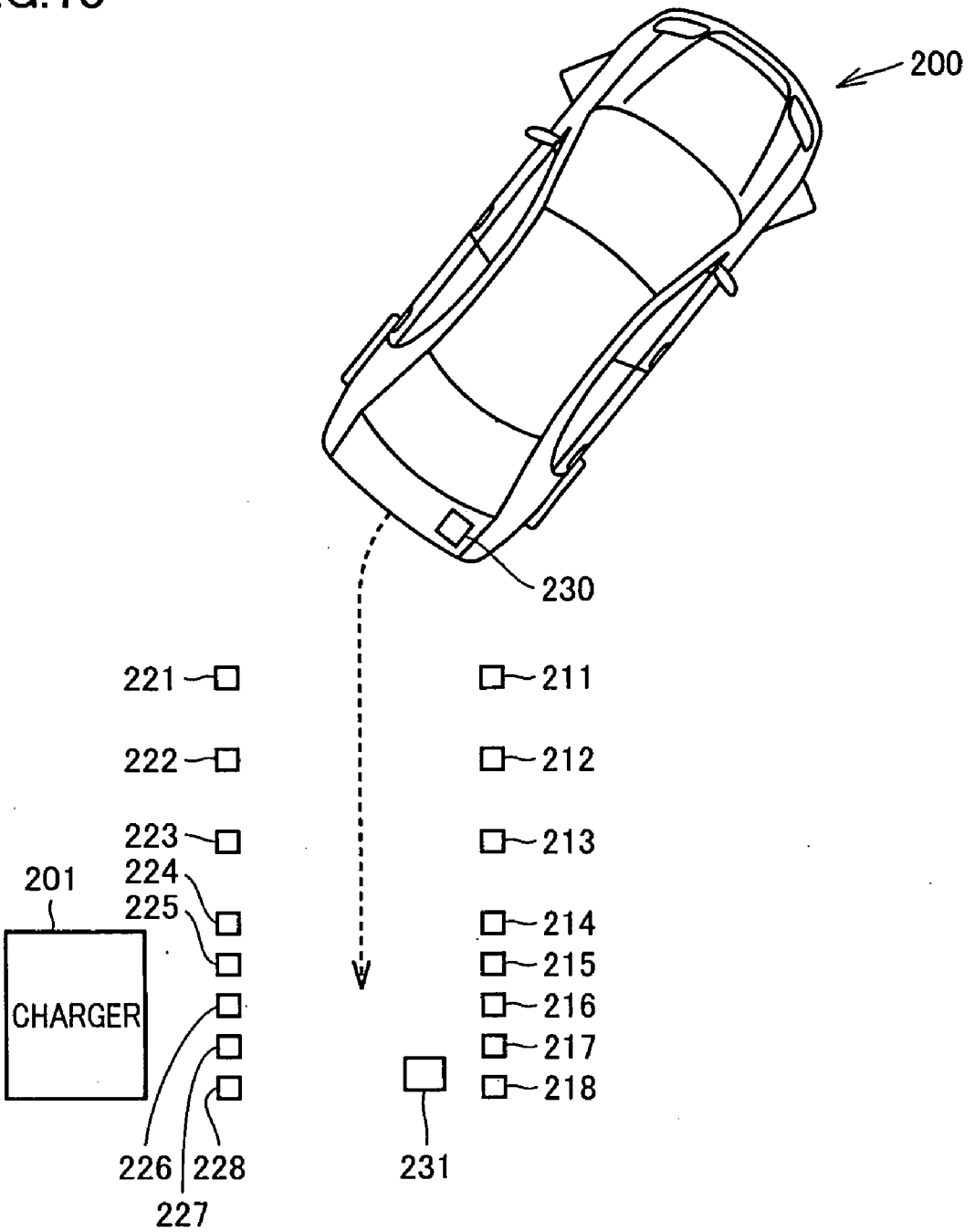
200
230
221
222
223
224
225
211
212
213
214
215
216
217
218
201
CHARGER
226
227
228
231

# PARKING ASSIST DEVICE AND A METHOD FOR ELECTRIC POWER TRANSMISSION AND RECEPTION BETWEEN A VEHICLE AND A GROUND APPARATUS

## TECHNICAL FIELD

**[0001]** The invention relates to a method for electric power transmission and reception between a vehicle and a ground apparatus.

## BACKGROUND ART

**[0002]** In recent years, hybrid vehicles have received great attention as environmentally friendly vehicles. The hybrid vehicle employs, as drive sources, a conventional engine as well as a battery, an inverter and an electric motor driven by the inverter.

**[0003]** Japanese Patent Laying-Open No. 8-154307 has disclosed a hybrid vehicle provided with an external charging function. The hybrid vehicle includes a battery that can be charged by an external charger, an electric motor driving wheels by an electric power supplied from the battery, control means for controlling an operation of the motor, an internal combustion engine directly and indirectly used for driving the wheels and traveling time related quantity calculating means that calculates a quantity related to a traveling time elapsed after the external charger charged the battery. The control means restricts the output of the electric motor when the traveling time related quantity calculated by the traveling time related quantity calculating means reaches a predetermined quantity.

**[0004]** When this hybrid vehicle has run for a long time without external charging, the output of the motor is restricted, and a driver is urged to perform the external charging. Therefore, this hybrid vehicle can reduce dependence on the internal combustion engine.

**[0005]** However, it is troublesome for a driver to connect the external charger to the vehicle via a charge cable every time the driver returns home and parks the vehicle at a parking space. Also, the driver must be careful to park the vehicle at an appropriate position when the driver moves the vehicle to a position near a fixed charger on a ground.

## DISCLOSURE OF THE INVENTION

**[0006]** An object of the invention is to provide a parking assist device allowing simple charging as well as a method for electric power transmission and reception between a vehicle and a ground apparatus.

**[0007]** In summary, the invention provides a parking assist device including a display unit displaying a surrounding situation of a vehicle, an input unit for entering a target parking position of the vehicle, and a control unit performing parking assist control by calculating a path according to the target parking position. The control unit further performs, under a predetermined condition, position alignment assist control for aligning a vehicle-side power transmission/reception unit placed on the vehicle to an apparatus-side power transmission/reception unit of an apparatus placed on a ground.

**[0008]** Preferably, the parking assist device further includes an image-taking unit taking an image of the surrounding situation of the vehicle. The control unit performs the position alignment assist control by recognizing a position of an identifier indicating the apparatus-side power transmission/reception unit when the identifier is present near the target parking position in the surrounding situation taken by the image-taking unit.

**[0009]** Preferably, the apparatus supplies an electric power to the vehicle, and the vehicle is provided with a battery being externally chargeable through the vehicle-side power transmission/reception unit. The control unit determines according to a state of charge of the battery whether the charging is to be executed or not.

**[0010]** Preferably, the apparatus placed on the ground includes determining means for determining whether the vehicle is of a type capable of power transmission/reception or not.

**[0011]** Further preferably, the apparatus supplies the electric power to the vehicle, and the control unit instructs the connection of the vehicle-side power transmission/reception unit to the apparatus-side power transmission/reception unit after the end of the parking assist control when the vehicle is of the chargeable type.

**[0012]** Preferably, the apparatus includes an arm being extendable according to an instruction of the control unit for connecting the apparatus-side power transmission/reception unit to the vehicle-side power transmission/reception unit.

**[0013]** Preferably, the vehicle includes an arm being extendable according to an instruction of the control unit for connecting the vehicle-side power transmission/reception unit to the apparatus-side power transmission/reception unit.

**[0014]** Preferably, the control unit performs, as the parking assist control, automatic steering according to movement of the vehicle on the path.

**[0015]** According to another aspect of the invention, a method for electric power transmission and reception between a vehicle and a ground apparatus includes the steps of instructing start of movement of the vehicle; moving the vehicle to a parking position; determining whether the vehicle can transmit and receive an electric power or not; and transmitting and receiving the electric power, between the vehicle and the apparatus placed on a ground after the vehicle is parked at a parking position when it is determined in the determining step that the vehicle can transmit and receive the electric power.

**[0016]** Preferably, the method for the electric power transmission and reception between the vehicle and the ground apparatus further includes the steps of instructing start of execution of the parking assist; setting the parking position; and correcting the parking position set in the setting step according to relative positions of the vehicle and the apparatus.

**[0017]** Further preferably, the method for the electric power transmission and reception between the vehicle and the ground apparatus further includes the step of inquiring of the driver, for confirmation, about whether the parking of the vehicle is to be executed or not based on the parking position corrected in the correcting step.

**[0018]** According to the invention, the driver can simply performs the charging, and feels less troublesome when performing the charging. These contribute to spread of vehicles requiring the charging.

## BRIEF DESCRIPTION OF THE DRAWINGS

**[0019]** FIG. **1** is a schematic block diagram of a vehicle **100** according to a first embodiment of the invention.

**[0020]** FIG. **2** is a functional block diagram of a control device **60** shown in FIG. **1**.

**[0021]** FIG. **3** is a functional block diagram of a converter control unit **61** shown in FIG. **2**.

**[0022]** FIG. **4** is a functional block diagram of first and second inverter control units **62** and **63** shown in FIG. **2**.

**[0023]** FIG. **5** shows, in a simplified form, portions relating to charging in the circuit diagram of FIG. **1**.

**[0024]** FIG. **6** shows a control state of transistors in a charging operation.

**[0025]** FIG. **7** is a flowchart showing a control structure of a parking assist control program executed by vehicle **100**.

**[0026]** FIG. **8** illustrates screen contents of a touch display displayed in step S**2**.

**[0027]** FIG. **9** illustrates arm connection performed in step S**12**.

**[0028]** FIG. **10** illustrates charge control in step S**13** in FIG. **7**.

**[0029]** FIG. **11** illustrates connection of a connection arm in a second embodiment.

**[0030]** FIG. **12** is a flowchart illustrating a control structure of a program executed on a vehicle-side and an apparatus-side in the second embodiment.

**[0031]** FIG. **13** illustrates luminous display of a parking space frame.

## BEST MODES FOR CARRYING OUT THE INVENTION

**[0032]** Embodiments of the invention will now be described with reference to the drawings. In the following description and drawings, the corresponding portions bear the same reference numbers, and description thereof is not repeated.

### First Embodiment

**[0033]** FIG. **1** is a schematic block diagram of a vehicle **100** according to the invention.

**[0034]** Referring to FIG. **1**, vehicle **100** includes a battery unit BU, a booster converter **10**, inverters **20** and **30**, power supply lines PL**1** and PL**2**, a ground line SL, U-phase lines ULL and UL**2**, V-phase lines VL**1** and VL**2**, W-phase lines WL**1** and WL**2**, motor generators MG**1** and MG**2**, an engine **4**, a power distribution mechanism **3** and wheels **2**.

**[0035]** Vehicle **100** is a hybrid vehicle employing the motor and the engine for driving the wheels.

**[0036]** Power distribution mechanism **3** is coupled to engine **4** and motor generators MG**1** and MG**2** for distributing a power among them. For example, a planetary gear mechanism having three rotation axes of a sun gear, a planetary carrier and a ring gear can be used as the power distribution mechanism. These three rotation axes are connected to engine **4** and motor generators MG**1** and MG**2**, respectively. For example, motor generator MG**1** may have a hollow rotor, and a crank shaft of engine **4** may extend through the center of the rotor. Thereby, power distribution mechanism **3** can be mechanically connected to engine **4** and motor generators MG**1** and MG**2**.

**[0037]** The rotation axis of motor generator MG**2** is coupled to wheels **2** via a reduction gear and a differential gear which are not shown in the figures. Another reduction gear for the rotation axis of motor generator MG**2** may be incorporated into power distribution mechanism **3**.

**[0038]** Motor generator MG**1** is incorporated into the hybrid vehicle for operating as an electric power generator driven by the engine and for operating as an electric motor that can start the engine. Motor generator MG**2** is incorporated into the hybrid vehicle for operating as an electric motor that drives the wheels of the hybrid vehicle.

**[0039]** Motor generators MG**1** and MG**2** are, e.g., three-phase AC synchronous motors, respectively. Motor generator MG**1** includes three-phase coils, i.e., U-, V- and W-phase coils U**1**, V**1** and W**1** as stator coils. Motor generator MG**2** includes three-phase coils, i.e., U-, V- and W-phase coils U**2**, V**2** and W**2** as stator coils.

**[0040]** Motor generator MG**1** generates a three-phase AC voltage, using an engine output, and supplies the generated three-phase AC voltage to inverter **20**. Motor generator MG**1** generates a drive power from the three-phase AC voltage received from inverter **20**, and thereby starts the engine.

**[0041]** Motor generator MG**2** generates a drive torque for the vehicle from the three-phase AC voltage received from inverter **30**. Motor generator MG**2** generates a three-phase AC voltage and provides it to inverter **30** during a regenerative braking operation of the vehicle.

**[0042]** Battery unit BU includes a battery B**1** having a negative pole connected to ground line SL, a voltage sensor **70** measuring a voltage of battery B**1** and a current sensor **84** measuring a current of battery B**1**. A vehicle load includes motor generators MG**1** and MG**2**, inverters **20** and **20**, and booster converter **10** supping a boosted voltage to inverters **20** and **30**.

**[0043]** Battery B**1** may be a secondary battery such as a nickel hydrogen battery, a lithium ion battery or a lead acid battery. Alternatively, battery B**1** may be replaced with an electric double layer capacitor of a large capacitance.

**[0044]** Battery unit BU provides a DC voltage supplied from battery B**1** to booster converter **10**. Battery B**1** inside battery unit BU is charged with the DC voltage provided from booster converter Q**1**.

**[0045]** Booster converter **10** includes a reactor L, npn transistors Q**1** and Q**2**, and diodes D**1** and D**2**. Reactor L has an end connected to power supply line PL**1**, and the other end thereof is connected to a node between npn transistors Q**1** and Q**2**. npn transistors Q**1** and Q**2** are connected in series between power supply line PL**2** and ground line SL, and receives on their bases a signal PWC from a control device **60**. Diodes D**1** and D**2** are provided for transistors Q**1** and Q**2**, respectively, and each are connected between an emitter and a collector of the corresponding transistor for passing a current from the emitter to the collector.

**[0046]** IGBTs (Insulated Gate Bipolar Transistors) may be used as the npn transistors described above as well as npn transistors in the following description, respectively. Also, instead of the npn transistors, power switching elements such as power MOSFETs (Metal Oxide Semiconductor Field-Effect Transistors) may be used.

**[0047]** Inverter **20** includes U-, V- and W-phase arms **22**, **24** and **26**, which are connected in parallel between power supply line PL**2** and ground line SL.

**[0048]** U-phase arm **22** includes npn transistors Q**11** and Q**12** connected in series. V-phase arm **24** includes npn transistors Q**13** and Q**14** connected in series. W-phase arm **26** includes npn transistors Q**15** and **16** connected in series. Diodes D**11**-D**16** are arranged for npn transistors Q**11**-Q**16**, respectively, and each are connected between the collector and the emitter of the corresponding transistor for passing the current from the emitter to the collector. A node between the npn transistors in each phase arm is connected via corresponding U-, V- or W-phase line ULL, VL**1** or WL**1** to a coil

end of the corresponding phase coil of motor generator MG**1** other than its neutral point N**1**.

**[0049]** Inverter **30** includes U-, V- and W-phase arms **32**, **34** and **36**, which are connected in parallel between power supply line PL**2** and ground line SL.

**[0050]** U-phase arm **32** includes npn transistors Q**21** and Q**22** connected in series. V-phase arm **34** includes npn transistors Q**23** and Q**24** connected in series. W-phase arm **36** includes npn transistors Q**25** and Q**26** connected in series. Diodes D**21**-D**26** are arranged for npn transistors Q**21**-Q$^{26}$, respectively, and each are connected between the collector and the emitter of the corresponding npn transistor for passing the current from the emitter to the collector. In inverter **30**, each node between the npn transistors of each phase arm is connected via corresponding U-, V- or W-phase line UL**2**, VL**2** or WL**2** to a coil end of the corresponding phase coil of motor generator MG**2** other than a neutral point N**2**.

**[0051]** Vehicle **100** further includes capacitors C**1** and C**2**, a relay circuit **40**, a connector **50**, control device **60**, AC lines ACL**1** and ACL**2**, voltage sensors **72**-**74** and current sensors **80** and **82**.

**[0052]** Capacitor C**1** is connected between power supply line PL**1** and ground line SL, and reduces an influence on battery B**1** and booster converter **10** due to voltage variations. A voltage sensor **73** measures a voltage VL between power supply line PL**1** and ground line SL.

**[0053]** Capacitor C**2** is connected between power supply line PL**2** and ground line SL, and reduces an influence on booster converter **10** and inverters **20** and **30** due to variations in voltage. A voltage sensor **72** measures a voltage VH between power supply line PL**2** and ground line SL.

**[0054]** Booster converter **10** boosts a DC voltage supplied from battery unit BU via power supply line PL**1**, and provides it to power supply line PL**2**. More specifically, booster converter **10** accumulates, as a magnetic field energy, a current flowing according to a switching operation of npn transistor Q**2** in reactor L based on a signal PWC provided from control device **60**, and discharges the accumulated energy by passing a current to power supply line PL**2** via diode D**1** in synchronization with the turn-off of npn transistor Q**2**. Thereby, booster converter **10** performs the boosting operation.

**[0055]** Based on signal PWC provided from control device **60**, booster converter **10** charges the battery inside battery unit BU by stepping down the DC voltage supplied from one or both of inverters **20** and **30** via power supply line PL**2** to a voltage level of battery unit BU.

**[0056]** Based on a signal PWM**1** provided from control device **60**, inverter **20** drives the DC voltage supplied from power supply line PL**2** into a three-phase AC voltage to drive motor generator MG**1**.

**[0057]** Thereby, motor generator MG**1** is generated to generate a torque designated by a torque instruction value TR**1**. Inverter **20** converts the three-phase AC voltage that is generated by motor generator MG**1** receiving the output of the engine into a DC voltage based on signal PWM**1** received from control device **60**, and provides the produced DC voltage to power supply line PL**2**.

**[0058]** Based on a signal PWM**2** provided from control device **60**, inverter **30** drives the DC voltage supplied from power supply line PL**2** into a three-phase AC voltage to drive motor generator MG**2**.

**[0059]** Thereby, motor generator MG**2** is driven to generate a torque designated by a torque instruction value TR**2**. During the regenerative braking operation of the hybrid vehicle provided with vehicle **100**, inverter **30** converts the three-phase AC voltage generated by motor generator MG**2** receiving the rotative force from the drive shaft into a DC voltage based on signal PWM**2** provided from control device **60**, and provides the produced DC voltage to power supply line PL**2**.

**[0060]** The regenerative braking in this description includes braking that is performed when a driver of the hybrid vehicle steps on a foot brake, and is accompanied by regenerative power generation, and also includes deceleration (or stopping of acceleration) of the vehicle that is performed by releasing an accelerator pedal during running without operating the foot brake while performing the regenerative power generation.

**[0061]** Relay circuit **40** includes relays RY**1** and RY**2**, which may be mechanical contact relays and may also be semiconductor relays, respectively. Relay RY**1** is arranged between AC line ACL**1** and connector **50**, and is turned of/off in response to control signal CNTL from control device **60**. Relay RY**2** is arranged between AC line ACL**2** and connector **50**, and is turned of/off in response to control signal CNTL from control device **60**.

**[0062]** Relay circuit **40** connects or disconnects AC lines ACL**1** and ACL**2** to or from connector **50** in response to control signal CNTL provided from control device **60**. More specifically, when relay circuit **40** receives control signal CNTL at an H-level (logical high level) from control device **60**, it electrically connects AC lines ACL**1** and ACL**2** to connector **50**. When relay circuit **40** receives control signal CNTL at an L-level (logical low level) from control device **60**, it electrically disconnects AC lines ACL**1** and ACL**2** from connector **50**.

**[0063]** Connector **50** is a terminal for applying an AC voltage of an external power supply **55** between neutral points N**1** and N**2** of motor generators MG**1** and MG**2**. Thus AC voltage may be an AC **100** V supplied from the domestic commercial power line. Voltage sensor **74** measures the voltage supplied to connector **50**, and transmits a measured value to control device **60**.

**[0064]** Voltage sensor **70** senses a battery voltage VB**1** of battery B**1**, and provides sensed battery voltage VB**1** to control device **60**. Voltage sensor **73** senses the voltage between the opposite ends of capacitor C**1**, i.e., input voltage VL of booster converter **10**, and provides sensed voltage VL to control device **60**. Voltage sensor **72** senses the voltage between the opposite ends of capacitor C**2**, i.e., output voltage VH (which corresponds to the input voltages of inverters **20** and **30** in this description) of booster converter **10**, and provides sensed voltage VH to control device **60**.

**[0065]** Current sensor **80** senses a motor current MCRT**1** flowing through motor generator MG**1**, and provides sensed motor current MCRT**1** to control device **60**. Current sensor **82** senses a motor current MCRT**2** flowing through motor generator MG**2**, and provides sensed motor current MCRT**2** to control device **60**.

**[0066]** Control device **60** produces signal PWC for driving booster converter **10** based on torque instruction values TR**1** and TR**2** and motor revolution speeds MRN**1** and MRN**2** of respective motor generators MG**1** and MG**2** provided from an external ECU (Electronic Control Unit) as well as voltages VL and VH provided from voltage sensors **72** and **73**, respectively, and provides signal PWC thus produced to booster converter **10**.

**[0067]** Control device **60** produces signal PWM**1** for driving motor generator MG**1** based on voltage VH as well as

motor current MCRT**1** and torque instruction value TR**1** of motor generator MG**1**, and provides signal PWM**1** thus produced to inverter **20**. Further, control device **60** produces signal PWM**2** for driving motor generator MG**2** based on voltage VH as well as motor current MCRT**2** and torque instruction value TR**2** of motor generator MG**2**, and provides signal PWM**2** thus produced to inverter **30**.

**[0068]** Control device **60** produces signals PWM**1** and PWM**2** for controlling inverters **20** and **30** so that battery B**1** may be charged with the AC voltage of the commercial power supply applied between neutral points N**1** and N**2** of motor generators MG**1** and MG**2**, based on a signal IG from an ignition switch or key and an SOC (State Of Charge) of battery B**1**.

**[0069]** Control device **60** determines based on the SOC of battery B**1** whether it can be externally charged or not. When it can be externally charged, control device **60** provides control signal CNTL at the H-level to relay circuit **40**. When control device **60** determines that battery B **1** is substantially fully charged and cannot be charged, it provides control signal CNTL at the L-level to relay circuit **40**. When signal IG indicates a stop state, control device **60** stops inverters **20** and **30**.

**[0070]** Vehicle **100** further includes a parking assist switch **52** for entering setting of performing or not performing the parking assist by a parking assist device of the vehicle, a back monitor camera **53** taking an image of a surrounding situation behind the vehicle, a touch display **58** displaying the surrounding situation behind the vehicle and also functioning as in input device for designating a target parking position, a wheel speed sensor **56** sensing rotations of wheel **2** and an EPS actuator **54** driving a steering device, i.e., an electric power steering device. The target parking position designated by touch display **58** is stored in a memory **57** arranged in control device **60**.

**[0071]** Back monitor camera **53** is arranged at the rear center of the vehicle, and takes an image of a region spreading at a predetermined angle behind the vehicle. Image information about the situation near and behind the vehicle obtained by back monitor camera **53** is supplied to control device **60**.

**[0072]** Touch display **58** is arranged in a position (e.g., at a center of an instrument panel) where a vehicle's driver can view and operate. Control device **60** displays an actual image taken by back monitor camera **53** on touch display **58**, e.g., when a gearshift is in a reverse position. Touch display **58** displays on its screen an image of the situation near and behind the vehicle taken by back monitor camera **53** according to an instruction of control device **60**. Touch display **58** displays an auxiliary line, frame and the like for assisting and controlling the parking according to the instruction of control device **60** in such a fashion that these are superimposed on the actual image taken by back monitor camera **53**.

**[0073]** Touch display **58** is provided with a pressure-sensitive or thermo-sensitive touch operation unit that can be operated by the vehicle driver. The touch operation unit is formed of a plurality of hierarchical switches, and is displayed on the screen according to the instruction from control device **60**. Control device **60** senses a touch of the touch operation unit by the vehicle driver, and executes processing according to specific contents of the touch operation unit. The touch operation unit includes switches for performing the parking assist control, i.e., switches for starting a garage parking mode and a tandem parking mode, respectively, as well as arrow button switches for designating a target parking space frame position for parking the vehicle by the driver and the like.

**[0074]** In connection with EPS actuator **54** applying a torque to a steering shaft, the device includes a torque sensor sensing a steering torque applied to the steering shaft by the steering operation of the vehicle driver and a steering angle sensor sensing a steering angle of the steering shaft, although these sensors are not shown in the figures. Control device **60** controls the electric motor to generate a torque that assists the steering torque during the steering operation of the driver, and also controls EPS actuator **54** to generate a torque for steering the vehicle without requiring the steering operation of the driver when the vehicle parking operation such as the garage parking, the tandem parking of the like is performed under the parking assist control.

**[0075]** The steering angle sensor provides the steering angle information about the steering shaft to control device **60**. Control device **60** calculates the target steering angle of the steering shaft to be attained when the parking assist control is executed, and controls EPS actuator **54** to generate a torque for the parking assist control according to the target steering angle.

**[0076]** Control device **60** internally has memory **57** for reading and writing data. Memory **57** stores position information about the position, on a road (on absolute coordinates), of the target parking space frame that is set by the position setting of the driver as will be described later, and also stores path information that relates to the path to the target parking position and is produced by the calculation. The information stored in memory **57** will be erased when the parking assist control is completed and, for example, when the shift position is changed from the reverse to the park, neutral or the like, or when the vehicle reaches a position close to the target parking position.

**[0077]** The parking assist device achieved by control device **60** includes touch display **58** including a display for displaying the surrounding situation of the vehicle as well as the input unit for inputting the target parking position of the vehicle, and also includes control device **60** calculating the path corresponding to the target parking position and performing the parking assist control. Control device **60** further performs, under a predetermined condition, the assist control for aligning the positions of a vehicle-side power supply/receive unit arranged in the vehicle and an apparatus-side power supply/receive unit of an apparatus on the ground. Preferably, the parking assist device further includes back monitor camera **53** taking the image of the surrounding situation of the vehicle. Control device **60** performs the position alignment assist control by recognizing a position of an identifier indicating the apparatus-side power supply/receive unit when the identifier is present near the target parking position in the taken surrounding situation.

**[0078]** Control device **60** may be achieved by a plurality of comparators such as am electric power steering comparator, a hybrid control computer and a parking assist computer.

**[0079]** FIG. **2** is a function block diagram relating to the motor generator control and the charge control of control device **60** shown in FIG. **1**.

**[0080]** Referring to FIG. **2**, control device **60** includes a converter control unit **61**, first and second inverter control units **62** and **63**, and an AC input control unit **64**. Converter control unit **61** produces signal PWC for turning on/off npn transistors Q **1** and Q**2** of booster converter **10** based on battery voltage VB **1**, voltage VH, torque instruction values

TR1 and TR2, and motor revolution speeds MRN1 and MRN2, and provides produced signal PWC to booster converter 10.

[0081] First inverter control unit 62 produces signal PWM 1 for turning on/off npn transistors Q11-Q16 of inverter 20 based on torque instruction value TR1 and motor current MCRT 1 of motor generator MG1 as well as voltage VH, and provides produced signal PWM1 to inverter 20.

[0082] Second inverter control unit 63 produces signal PWM2 for turning on/off npn transistors Q21-Q26 of inverter 30 based on torque instruction value TR2 and motor current MCRT2 of motor generator MG2 as well as voltage VH, and provides produced signal PWM2 to inverter 30.

[0083] AC input control unit 64 determines the drive states of motor generators MG1 and MG2 based on torque instruction values TR1 and TR2 as well as motor revolution speeds MRN1 and MRN2, and performs cooperative control on the two inverters based on signal IG and the SOC of batter B1. Thereby, AC input control unit 64 converts the externally supplied AC voltage into the DC, boosts it and charges the battery.

[0084] Signal IG at the H-level means that the hybrid vehicle with vehicle 100 is operating, and signal IG at the L-level means that the hybrid vehicle is in the stopped state.

[0085] In the case where motor generators MG1 and MG2 are in the stopped state and signal IG likewise indicates that the hybrid vehicle is in the stopped state, AC input control unit 64 performs the charging when the SOC of battery B1 is lower than the predetermined level. More specifically, AC input control unit 64 provides control signal CNTL to turn on relays RY1 and RY2, produces control signal CTL1 in response to any input of a voltage VAC for performing cooperative control of inverters 20 and 30 to convert the externally supplied AC voltage into the DC voltage and to boost it, and charges the battery.

[0086] AC input control unit 64 does not perform the charging operation when motor generators MG1 and MG2 are currently operating or signal IG indicates that the hybrid vehicle is being driven, or when the SOC of battery B1 is higher than a predetermined level. More specifically, AC input control unit 64 opens relays RY1 and RY2 by signal CNTL, and produces control signal CTL0 to cause booster converter 10 and inverters 20 and 30 to perform the ordinary operation for the vehicle driving.

[0087] FIG. 3 is a function block diagram of converter control unit 61 shown in FIG. 2.

[0088] Referring to FIG. 3, converter control unit 61 includes an inverter input voltage instruction arithmetic unit 112, a feedback voltage instruction arithmetic unit 114, a duty ratio arithmetic unit 116 and a PWM signal converting unit 118.

[0089] Inverter input voltage instruction arithmetic unit 112 arithmetically obtains the optimum value (target value) of the inverter input value, i.e., a voltage instruction VH_com based on torque instruction values TR1 and TR2 as well as motor revolution speeds MRN1 and MRN2, and provides voltage instruction VH_com thus obtained to feedback voltage instruction arithmetic unit 114.

[0090] Based on output voltage VH of booster converter 10 sensed by voltage sensor 72 and voltage instruction VH_com provided from inverter input voltage instruction arithmetic unit 112, feedback voltage instruction arithmetic unit 114 arithmetically obtains a feedback voltage instruction VH_com_fb for controlling output voltage VH to attain voltage instruction VH_com, and provides feedback voltage instruction VH_corn_fb thus obtained to duty ratio arithmetic unit 116.

[0091] Based on battery voltage VB1 provided from voltage sensor 70 and feedback voltage instruction VH_com_fb provided from feedback voltage instruction arithmetic unit 114, duty ratio arithmetic unit 116 arithmetically obtains a duty ratio for controlling output voltage VH of booster converter 10 to attain voltage instruction VH_com, and provides the obtained duty ratio to PWM signal converting unit 118.

[0092] PWM signal converting unit 118 produces a PWM (Pulse Width Modulation) signal for turning on/off npn transistors Q 1 and Q2 of booster converter 10 based on the duty ratio received from duty ratio arithmetic unit 116, and provides the PWM signal thus produced, as signal PWC, to npn transistors Q1 and Q2 of booster converter 10.

[0093] By increasing the ON duty of npn transistor Q2 of the lower arm of booster converter 10, the power storage of reactor L increases so that the output of a higher voltage can be obtained. By increasing the ON duty of npn transistor Q1 of the upper arm, the voltage of power supply line PL2 lowers. Therefore, by controlling the duty ratios of npn transistors Q1 and Q2, it is possible to control the voltage on power supply line PL2 to attain an arbitrary voltage equal to or higher than the output voltage of battery B1.

[0094] Further, PWM signal converting unit 118 keeps npn transistors Q1 and Q2 in the on and off states regardless of duty ratio arithmetic unit 116, respectively, when control signal CTL1 is active. Thereby, it is possible to pass the charge current from power supply line PL2 to power supply line PL1.

[0095] FIG. 4 is a function block diagram showing first and second inverter control units 62 and 63 shown in FIG. 2.

[0096] Referring to FIG. 4, each of first and second inverter control units 62 and 63 includes a motor control phase voltage (i.e., a phase voltage for motor control) arithmetic unit 120 and a PWM signal converting unit 122.

[0097] Motor control phase voltage arithmetic unit 120 receives input voltage VH of inverters 20 and 30 from voltage sensor 72, receives motor current MCRT1 (or MCRT2) flowing through each phase of motor generator MG1 (or MG2) from current sensor 80 (or 82), and receives torque instruction value TR1 (or TR2) from the ECU. Based on these input values, motor control phase voltage arithmetic unit 120 arithmetically obtains the voltage to be applied to each phase coil of motor generator MG1 (or MG2), and provides each phase coil voltage thus obtained to PWM signal converting unit 122.

[0098] When PWM signal converting unit 122 receives control signal CTL0 from AC input control unit 64, PWM signal converting unit 122 produces a signal PWM1_0 which is a kind of signal PWM1 (or a signal PWM2_0 which is a kind of signal PWM2) and actually turns on/off each of npn transistors Q11-Q16 (or Q21-Q26) of inverter 20 (or 30), based on each phase coil voltage instruction received from motor control phase voltage arithmetic unit 120, and provides signal PWM1_0 (or PWM2_0) thus produced to each of npn transistors Q11-Q16 (or Q21-Q26) of inverter 20 (or 30).

[0099] In this manner, the switching control of respective npn transistors Q11-Q16 (or Q21-Q26) is performed, and the currents passed through the respective phases of motor generator MG1 (or MG2) are controlled to output the instructed torque from motor generator MG1 (or MG2). Consequently, the motor torque corresponding to torque instruction value TR1 (or TR2) is output.

**[0100]** When PWM signal converting unit **122** receives control signal CTL **1** from AC input control unit **64**, PWM signal converting unit **122** produces a signal PWM**1**_**1** which is a kind of signal PWM**1** (or a signal PWM**2**_**1** which is a kind of signal PWM**2**) and turns on/off npn transistors Q**11**-Q**16** (or Q**21**-Q**26**) to pass the AC currents of the same phase through U-, V- and W-phase arms **22**, **24** and **26** (or 30, 32 and 36) of inverter **20** (or 30) regardless of the output of motor control phase voltage arithmetic unit **120**, and provides signal PWM**1**_**1** (or PWM**2**_**1**) thus produced to npn transistors Q**1**'-Q**16** (or Q**21**-Q**26**) of inverter **20** (or **30**).

**[0101]** When the AC currents of the same phase flow through the U-, V- and W-phase coils, motor generators MG**1** and MG**2** does not generate a rotation torque. Inverters **20** and **30** undergo the cooperative control, and thereby convert AC voltage VAC into the DC charge voltage.

**[0102]** Then, description will be given on a method of generating the DC charge voltage in vehicle **100** from AC voltage VAC of the commercial power supply.

**[0103]** FIG. **5** schematically shows a portion relating to the charge in the circuit diagram of FIG. **1**.

**[0104]** FIG. **5** shows, as a representative example, the U-phase arm in inverters **20** and **30** shown in FIG. **1**. Also, the U-phase coil is shown as a representative example among the three-phase coils of the motor generator. The operation relating to the U-phase will be described below. Other phase coils pass the currents of the same phase as the U-phase coil, and therefore the circuits thereof operate in the same manner as those of the U-phase coil. As can be seen from FIG. **5**, each of a set of U-phase coil U**1** and U-phase arm **22** and a set of U-phase coil U**2** and U-phase arm **32** has substantially the same structure as booster converter **10**. Therefore, it is possible to convert the AC voltage of 100 V into the DC voltage, and further it is possible to boost the voltage and to perform the conversion to provide the battery charge voltage, e.g., of about 200 V.

**[0105]** FIG. **6** shows control states of the transistors in the charging operation.

**[0106]** Referring to FIGS. **5** and **6**, when voltage VAC is larger than 0, i.e., when voltage VM**1** on line ACL**1** is higher than voltage VM**2** on line ACL**2**, transistor Q**1** of the booster converter is on, and transistor Q**2** is off. Thereby, booster converter **10** can pass the charge current from power supply line PL**2** to power supply line PL**1**.

**[0107]** In the first inverter, switching of transistor Q**12** is performed with a period and a duty ratio that correspond to voltage VAC, and transistor Q**11** is controlled to attain the off state or to attain the switching state in which it is turned on in synchronization with the turn-on of diode D**11**. At the same time, transistors Q**21** and Q**22** in the second inverter are controlled to attain the off state and the on state, respectively.

**[0108]** When voltage VAC is larger than 0 and transistor Q**12** is on, the current flows through coil U**1**, transistor Q**12**, diode D**22** and coil U**2** in this order. In this state, the energy accumulated in coils U**1** and U**2** is discharged when transistor Q**12** is turned off, and the current flows through diode D**11** to power supply line PL**2**. For reducing the loss by diode D**11**, transistor Q**11** may be turned on in synchronization with the on period of diode D**1**. Based on the values of voltages VAC and VH, the period of switching and the duty ratio of transistor Q**12** of which boosting ratio is obtained are determined.

**[0109]** When voltage VAC is lower than 0 and thus voltage VM**1** on line ACL**1** is lower than voltage VM**2** on line ACL**2**, transistor Q**1** of the booster converter is on, and transistor Q**2** is off. Thereby, booster converter **10** can pass the charge current from power supply line PL**2** to power supply line PL**1**.

**[0110]** In the second inverter, switching of transistor Q**22** is performed with a period and a duty ratio that correspond to voltage VAC, and the transistor Q**21** is controlled to attain the off state or to attain the switching state in which it is turned on in synchronization with the turn-on of diode D**21**. At this point in time, transistors Q**11** and Q**12** in the first inverter attain the off state and the on state, respectively.

**[0111]** When voltage VAC is lower than 0 and transistor Q**22** is on, the current flows through coil U**2**, transistor Q**22**, diode D**12** and coil U**1** in this order. In this state, the energy accumulated in coils U**1** and U**2** is discharged when transistor Q**22** is turned off, and this current flows through diode D**21** to power supply line PL**2**. For reducing the loss by diode D**21**, transistor Q**21** may be turned on in synchronization with the on period of diode D**21**. Based on the values of voltages VAC and VH, the period of switching and the duty ratio of transistor Q**22** of which boosting ratio is obtained are determined.

**[0112]** Detailed description will now be given on the points relating to the parking of vehicle **100** at a predetermined position and the connection of power supply **55** to connector **50**.

**[0113]** FIG. **7** shows a control structure of a parking assist control program executed by vehicle **100**.

**[0114]** Referring to FIGS. **1** and **7**, when the processing starts, it is determined in step S**1** whether a parking assist instruction is entered or not. For example, when parking assist switch **52** is on and the shift lever is in the reverse position, it is determined that the parking assist instruction is entered.

**[0115]** When it is determined in step S**1** that the parking assist instruction is not entered, the process proceeds to step S**17**, and the vehicle enters a manual operation mode in which automatic steering is not performed. When it is determined in step S**1** that the parking assist instruction is entered, the process proceeds to step S**2**.

**[0116]** In step S**2**, touch display **58** displays the target parking space frame, arrow buttons and the enter button.

**[0117]** FIG. **8** illustrates screen contents of the touch display displayed in step S**2**.

**[0118]** Referring to FIG. **8**, touch display **58** displays a surrounding situation behind the vehicle of which image is taken by back monitor camera **53**, and also displays a target parking space frame **151** corresponding to sizes of the vehicle, arrow buttons **161**-**170** for changing the position of target parking space frame **151**, a left/right select button **152** for selecting the right and left of the position of the target parking space frame, and an enter button **153** for designating final determination of the target parking space frame.

**[0119]** Referring to FIG. **8**, touch display **58** displays a charger **101** arranged near the parking space. An identifier **102** is attached charger **101** for identifying a charge port. This identifier is not specifically restricted provided that it can be identified by back monitor camera **53**, and a distinctive color such as yellow, a two-dimensional bar code or the like may be employed.

**[0120]** A driver can move the position of target parking space frame **151** parallel to itself by arrow buttons **161**-**168**. A driver can change the angle of target parking space frame **151** by arrow buttons **169** and **170**.

**[0121]** Referring to FIG. **7** again, after touch display **58** displays the screen contents in step S**2**, control device **60** determines a specific button operation performed by the driver in step S**3**.

**[0122]** When it is determined in step S**3** that the arrow button is operated, the process proceeds to step S**4**, and the position of the target parking space frame is changed corresponding to the operation of the arrow button, and then the target parking space frame is displayed in step S**2** again.

**[0123]** When the enter button is depressed in step S**3**, control device **60** determines whether a charger bearing identifier **102** is present in a predetermined region near target parking space frame **151** or not.

**[0124]** When the identifier of the charger is not detected in step S**5**, the process proceeds to step S**14**. When identifier **102** of the charger is detected in step S**5**, the process proceeds to step S**6**.

**[0125]** In step S**6**, it is determined whether the SOC of battery B**1** in FIG. **1** is smaller than a predetermined threshold Sth(F) or not. Threshold Sth(F) is a threshold for indicating the fully charged state. When the present charge state exceeds this fully charged state, the changing is not required so that the process proceeds to step S**14**.

**[0126]** When SOC is smaller than Sth(F) in step S**6**, the process proceeds to step S**7**. In step S**7**, control device **60** inquires of the driver about whether the charge is to be performed or not, through display on the touch display, a voice from a speaker (not shown) or the like.

**[0127]** When the driver designates not to perform the charging in step S**7**, the process proceeds to step S**14**.

**[0128]** When it is determined in step S**5** that the charger is not present, when it is determined in step S**6** that the SOC is equal to or higher than threshold Sth(F) and the charging is not required, or when the driver determines in step S**7** not to perform the charging, the process proceeds to step S**14**, and ordinary parking assist will be performed thereafter.

**[0129]** In step S**14**, control device **60** inquires of the driver, for confirmation, about whether the driver allows movement of the vehicle toward the position of the target parking space frame designated by the driver or not. When the driver allows the start of such movement, the process proceeds to step S**15**, and automatic steering drive is performed. In this operation, the driver views the surrounding situation for safety and operates the brake pedal for speed control. Thereby, the driver can move the vehicle to the target parking space frame without operating the steering wheel.

**[0130]** When the vehicle arrives at the target parking space frame in step S**16**, control device **60** stops the vehicle, and ends the parking assist processing.

**[0131]** When the parking assist instruction is not entered in step S**1**, or when the driver does not allow the start of the vehicle movement toward the designated target parking space frame in step S**9** or step S**14**, the process proceeds to step S**17**, in which the vehicle is set to the manual operation mode for not performing the automatic steering, and the process ends.

**[0132]** When the driver designates the charging in step S**7**, the process proceeds to step S**8**. The selection of charging and not-charging may be performed through buttons displayed on touch display **58**, or may be performed, e.g., through a voice or the like processed by voice recognition processing.

**[0133]** In step S**8**, the processing is performed to adjust minutely the position of target parking space frame **151** that is displayed on touch display **58** and was once fixed. This minute adjustment of the position is performed to achieve a positional relationship with respect to charger **101** so that the charging can be performed easily after parking of the vehicle. For facilitating this minute adjustment, a plurality of identifiers **102** may be arranged near charger **101**.

**[0134]** When the processing in step S**8** ends, control device **60** inquires of the driver in step S**9** about whether the vehicle can be started toward the changed position of the target parking space frame or not. For example, an obstacle such as a bicycle may be present inside the parking space frame so that the above inquiry is performed for avoiding contact with such an obstacle.

**[0135]** When the driver allows the start in step S**9**, control device **60** calculates the path to the target parking space frame in step S**10**, and operates EPS actuator **54** to perform the automatic steering driving along the calculated path. In this operation, the driver views the surrounding situation for safety and operates the brake pedal for speed control. Thereby, the driver can move the vehicle to the appropriate position without operating the steering wheel.

**[0136]** When the vehicle position reaches the target parking space frame, the vehicle stops in step S**11**, and the arm is connected in step S**12**.

**[0137]** FIG. **9** illustrates the arm connection performed in step S**12**.

**[0138]** Referring to FIG. **9**, charger **101** is provided with a receptacle for a charging plug. The automatic steering can achieve the same relationship between charger **101** and vehicle **100** every time. Therefore, the distance between charger **101** and vehicle **100** can be considerably small.

**[0139]** A connection arm **103** may be configured to extend from charger **101**. Alternatively, it may be configured to extend from vehicle **100**, whereby charger **101** is merely required to have a receptacle supplied with the ordinary commercial power. Further, connection arm **103** can be small in size owing to reduction in distance between charger **101** and vehicle **100**.

**[0140]** After the arm connection is performed in step S**12**, the process proceeds to step S**13**, and the charge control is performed. When the charging is completed, the process ends.

**[0141]** FIG. **10** illustrates the charge control in step S**13** shown in FIG. **7**.

**[0142]** Referring to FIGS. **1** and **10**, control device **60** first determines in step S**21** whether signal IG is off or not. When signal IG is not off in step S**21**, it is not appropriate to connect a charge cable to the vehicle for charging. Therefore, the process proceeds to step S**28** to perform the control according to the flowchart in FIG. **7**, and the process ends.

**[0143]** When signal IG is off in step S**21**, it is determined that the charging can be appropriately performed, and the process proceeds to step S**22**. In step S**22**, relays RY **1** and RY**2** are controlled to change from the off state to the on state, and voltage sensor **74** measures voltage VAC. When the AC voltage is not detected, it can be considered that the charge cable is not connected to the receptacle of connector **50** so that the process proceeds to step S**28** without performing the charge processing, and the control is then performed according to the flowchart of FIG. **7** to end the processing.

**[0144]** When an AC voltage is detected as voltage VAC in step S**22**, the process proceeds to step S**23**. In step S**23**, it is determined whether the SOC of battery B**1** is smaller than threshold Sth(F) representing the fully charged state or not.

**[0145]** When a relationship of (SOC<Sth(F)) is satisfied in step S**23**, the charging is allowed so that the process proceeds to step S**24**. In step S**24**, the control device turns on both relays RY**1** and RY**2**. In subsequent step S**25**, control device **60** performs the cooperative control on the two inverters to charge battery B**1**.

**[0146]** When the relationship of (SOC<Sth(F)) is not satisfied in step S**23**, battery B **1** is already fully charged and does not require the charging so that the process proceeds to step S**26**. In step S**26**, the charge stop processing is performed to stop inverters **20** and **30**. In subsequent step S**27**, relays RY**1** and RY**2** are turned off to interrupt the AC power to vehicle **100**. In step S**28**, the control returns to the flowchart of FIG. **7**, and the process ends.

**[0147]** In the first embodiment, the relative positions of the charger on the ground and the charge port of the vehicle can be accurately aligned to attain a predetermined relationship owing to the use of the parking assist device so that the connection can be easily automated. This allows easy charging.

Second Embodiment

**[0148]** The first embodiment has been described in connection with the example in which the parking assist device and the charge control device are arranged on only the vehicle side, and are not arranged inside the charger. A second embodiment will be described below in connection with an example in which a control device of the charger and a control device on the vehicle side cooperate to assist the parking and to control the charging.

**[0149]** FIG. **11** illustrates connection of a connection arm in the second embodiment.

**[0150]** In FIG. **11**, a connection arm **203** can extend from a charger **201** to a vehicle **200** in contrast to the structure in FIG. **9**. Charger **201** is internally provided with a power supply control device **202** controlling the apparatus on the ground side in FIG. **11** and a vehicle position detecting unit **231** corresponding to, e.g., a magnetic sensor.

**[0151]** FIG. **12** is a flowchart illustrating a control structure of a program executed on the vehicle-side and the apparatus-side in the second embodiment.

**[0152]** Referring to FIG. **12**, when processing starts on or in both the vehicle **200** and the ground apparatus (i.e., charger **201**), control device **60** on the vehicle side determines in step S**51** whether a driver has entered a parking assist instruction or not. It is determined that the parking assist instruction is entered, e.g., when parking assist switch **52** is on and the shift lever is in the reverse position.

**[0153]** When the parking assist instruction is not entered, a manual operation mode is set in step S**63**, and a driver operates the steering wheel to control the vehicle without performing the automatic steering.

**[0154]** When it is determined in step S**51** that the parking assist instruction is entered, the process proceeds to step S**52**. In step S**52**, control device **60** on the vehicle side transmits a parking advance-notice signal to the control device on the ground apparatus side. The transmission of the parking advance-notice signal is performed, e.g., by wireless communications. Such a configuration may be employed that the communications from the vehicle to the ground apparatus start when back monitor camera **53** recognizes based on the identifier that the parking space is provided with charger **201**.

**[0155]** When the control device on the ground apparatus side receives the parking advance-notice signal when it is in the state for waiting for reception of the parking advance-notice signal in step S**71**, the process proceeds to step S**72**.

**[0156]** In step S**72**, the control device on the ground apparatus side performs luminous display of the parking space frame.

**[0157]** FIG. **13** illustrates the luminous display of the parking space frame.

**[0158]** Referring to FIG. **13**, light-emitting diodes **211-218** and **221-228** or the like are embedded in the predetermined parking space near charger **201** and are exposed on the ground surface. The control device in charger **201** turns on or blinks LEDs **211-218** and **221-228** so that back monitor camera **53** of vehicle **200** can easily recognize the parking space frame position.

**[0159]** Control device **60** on the vehicle side extracts a luminous frame from an image taken by back monitor camera **53**, displays the target parking space frame in the position matching with the luminous frame and also displays arrow buttons **161-170** and enter button **153** shown in FIG. **8** beside it.

**[0160]** It is not essential to recognize the parking space frame position itself, and the vehicle may be configured to recognize the position of the charger and thereby to obtain internally the position of the target parking space frame with respect to the recognized position of the charger. Although the LEDs have been described by way of example, other elements emitting infrared rays may be used, in which case back monitor camera **53** is configured to recognize the infrared rays.

**[0161]** When the processing in step S**53** ends, control device **60** recognizes the button operation in step S**54**. When any one of arrow buttons **161-170** is operated in step S**54**, the process proceeds to step S**55**, and the position of the target parking space frame is changed to the position determined by operating the arrow buttons(s). Then, the process returns to step S**54**.

**[0162]** When the enter button is depressed in step S**54**, the process proceeds to step S**56**. In step S**56**, the automatic steering drive is performed similarly to the first embodiment. Thus, the driver views the surrounding situation and operates the brake pedal. Thereby, the driver adjusts the vehicle speed and moves the vehicle to the target parking space frame.

**[0163]** When the vehicle has moved to the target parking space frame, the vehicle stops and control device **60** transmits a parking completion signal to the control device on the ground-side apparatus in step S**57**. The ground-side apparatus is in the waiting state for determining whether the park completion signal is received or not, in step S**73**. When the park completion signal is received, the process proceeds from step S**73** to step S**74**. Then, the ground apparatus side enters the waiting state for determining whether the charge request signal is received or not.

**[0164]** When the processing in step S**57** ends on the vehicle side, a comparison in magnitude or value is made between the SOC and predetermined threshold Sth(F) in step S**58**. When the SOC is smaller than threshold Sth(F), the process proceeds to step S**59**. Otherwise, the process ends. In step S**59**, a charge request signal is transmitted from the vehicle side to the ground apparatus side. Then, the process proceeds to step S**60**.

**[0165]** When the ground apparatus side receives the charge request signal in step S**74**, the process proceeds to step S**75**, in which it is determined whether the current parking position of the vehicle is appropriate for the charging or not.

**[0166]** This determination can be performed using, e.g., a magnetic sensor that is vehicle position detecting unit **231** embedded in the parking space frame in FIG. **12** and a magnet **230** arranged in the corresponding position on the vehicle side. If the parking assist device operates correctly and the driver has not moved the parking space frame, magnet **230** is

located immediately above vehicle position detecting unit **231** when the parking is completed, and vehicle position detecting unit **231** detects the magnetism of magnet **230**.

**[0167]** For example, when an obstacle such as a bicycle is located in the predetermined parking position, the target parking space is moved in steps S**54** and S**55**. When the driver parks the vehicle in the moved parking space, vehicle position detecting unit **231** cannot detect the magnetism.

**[0168]** As described above, when vehicle position detecting unit **231** detects the magnetism, it is determined that the vehicle is in the appropriate position. When the vehicle position detecting unit **231** does not detect the magnetism, it is determined that the vehicle is in the inappropriate position. When the vehicle is in the appropriate position in step S**75** (OK in step S**75**), a charge-possible signal is transmitted from the ground apparatus side to the vehicle side in step S**76**. When the vehicle is in the inappropriate position in step S**75** (NG in step S**75**), a charge-impossible signal is transmitted from the ground apparatus side to the vehicle side in step S**80**.

**[0169]** In step S**60**, it is determined on the vehicle side which one of the charge-possible signal or the charge-impossible signal is received. When the charge-possible signal is determined in step S**60**, the processing proceeds to step S**61**. When the charge-impossible signal is determined, the process ends in step S**64**.

**[0170]** In step S**61**, the vehicle-side control device opens a charge lid, and transmits a lid-open signal to the ground apparatus side. In step S**77** subsequent to step S**76**, the ground apparatus side determines according to reception or nonreception of this lid-open signal whether the charge lid is open or not.

**[0171]** When the lid-open signal is detected, the processing proceeds from step S**77** to step S**78**, in which connection arm **203** in FIG. **11** is connected. In contrast to the case in FIG. **9**, connection arm **203** in FIG. **13** extends from charger **201** to vehicle **200**.

**[0172]** When the connection arm is connected in step S**78**, charger **201** supplies the power in step S**79**. In parallel with this, it is detected on the vehicle side that the power is supplied by performing the charge control in step S**62** as illustrated in FIG. **10**, and the charging is executed by the cooperative control of inverters **20** and **30**.

**[0173]** When the processing in steps S**62** and S**79** ends, the charge processing and power supply processing end in steps S**64** and S**81**, respectively.

**[0174]** In the second embodiment, since the connection arm is arranged on the ground apparatus side, the vehicle structure can be simple, and the weight and cost of the vehicle can be reduced.

**[0175]** The invention is not restricted to the charging of the vehicle, and can also be applied to the case where the vehicle supplies the electric power to the apparatus.

**[0176]** The connection between the vehicle and the charger is not restricted to the contact connection using the cable having, e.g., the plug, and may be performed by a non-contact connection transmitting and receiving an electric power via coils and the like.

**[0177]** Although the present invention has been described and illustrated in detail, it is clearly understood that the same is by way of illustration and example only and is not to be taken by way of limitation, the scope of the present invention being interpreted by the terms of the appended claims.

**1**. A parking assist device comprising:
a display unit displaying a surrounding situation of a vehicle;
an input unit for entering a target parking position of said vehicle; and
a control unit performing parking assist control by calculating a path according to said target parking position, wherein
said control unit further performs, under a predetermined condition, position alignment assist control for aligning a vehicle-side power transmission/reception unit placed on the vehicle with an apparatus-side power transmission/reception unit of an apparatus placed on a ground.

**2**. The parking assist device according to claim **1**, further comprising:
an image-taking unit taking an image of said surrounding situation of said vehicle, wherein
said control unit performs said position alignment assist control by recognizing a position of an identifier indicating said apparatus-side power transmission/reception unit when said identifier is present near said target parking position in said surrounding situation taken by said image-taking unit.

**3**. The parking assist device according to claim **1**, wherein
said apparatus supplies an electric power to said vehicle,
said vehicle is provided with a battery being externally chargeable through said vehicle-side power transmission/reception unit, and
said control unit determines according to a state of charge of said battery whether the charging is to be executed or not.

**4**. The parking assist device according to claim **1**, wherein
said apparatus placed on the ground includes determining means for determining whether said vehicle is of a type capable of power transmission/reception or not.

**5**. The parking assist device according to claim **4**, wherein
said apparatus supplies the electric power to said vehicle, and
said control unit instructs the connection of said vehicle-side power transmission/reception unit to said apparatus-side power transmission/reception unit after the end of said parking assist control when said vehicle is of the chargeable type.

**6**. The parking assist device according to claim **1**, wherein
said apparatus includes an arm being extendable according to an instruction of said control unit for connecting said apparatus-side power transmission/reception unit to said vehicle-side power transmission/reception unit.

**7**. The parking assist device according to claim **1**, wherein
said vehicle includes an arm being extendable according to an instruction of said control unit for connecting said vehicle-side power transmission/reception unit to said apparatus-side power transmission/reception unit.

**8**. The parking assist device according to claim **1**, wherein
said control unit performs, as said parking assist control, automatic steering according to movement of the vehicle on said path.

**9**. A method for electric power transmission and reception between a vehicle and a ground apparatus, comprising the steps of:
instructing start of movement of the vehicle;
moving said vehicle to a parking position;
determining whether said vehicle can transmit and receive an electric power or not; and

transmitting and receiving the electric power between the vehicle and an apparatus placed on a ground after said vehicle is parked at a parking position when it is determined in said determining step that said vehicle can transmit and receive the electric power.

**10**. The method for the electric power transmission and reception between the vehicle and the ground apparatus according to claim **9**, further comprising the steps of:

instructing start of execution of parking assist;

setting said parking position; and

correcting said parking position set in said setting step according to relative positions of said vehicle and said apparatus.

**11**. The method for the electric power transmission and reception between the vehicle and the ground apparatus according to claim **10**, further comprising the step of:

inquiring of the driver, for confirmation, about whether the parking of the vehicle is to be executed or not based on said parking position corrected in said correcting step.

* * * * *