US006157162A

United States Patent [19]

Hayashi et al.

[11] **Patent Number: 6,157,162**

[45] **Date of Patent: Dec. 5, 2000**

[54] **BATTERY CHARGING APPARATUS FOR ELECTRIC VEHICLES**

[75] Inventors: **Kiyotaka Hayashi**; **Kenji Uchibori**; **Akiyoshi Yamamoto**, all of Utsunomiya, Japan

[73] Assignee: **Honda Giken Kogyo Kabushiki Kaisha**, Tokyo, Japan

[21] Appl. No.: **09/391,593**

[22] Filed: **Sep. 8, 1999**

[30] **Foreign Application Priority Data**

Sep. 9, 1998 [JP] Japan 10-255719

[51] **Int. Cl.**[7] **H02J 7/00**

[52] **U.S. Cl.** **320/104**

[58] **Field of Search** 320/108, 109, 320/104

[56] **References Cited**

U.S. PATENT DOCUMENTS

Re. 36,225	6/1999	Harris	320/104
5,462,439	10/1995	Keith	320/109
5,498,948	3/1996	Bruni et al.	320/108
5,523,666	6/1996	Hoelzl et al.	320/109
5,538,809	7/1996	Bittihn et al.	320/109
5,606,237	2/1997	Biasotti et al.	320/108
5,661,391	8/1997	Hoelzl et al.	320/109
5,703,461	12/1997	Minoshima et al.	320/108
5,711,558	1/1998	Woody	292/335
5,714,864	2/1998	Rose et al.	320/109
5,850,135	12/1998	Kuki et al.	320/108
5,909,100	6/1999	Watanabe et al.	320/108
6,014,597	1/2000	Kochanneck	320/109

FOREIGN PATENT DOCUMENTS

6-14408	1/1994	Japan .
9-182212	7/1997	Japan .

OTHER PUBLICATIONS

U.S. application No. 09/391,512; filed Sep. 8, 1999; By: Uchibori et al Title: Charging Lid Opening and Closing Device for Electric Vehicle.

Primary Examiner—Shawn Riley
Assistant Examiner—Pia Tibbits
Attorney, Agent, or Firm—Arent, Fox, Kintner, Plotkin & Kahn PLLC

[57] **ABSTRACT**

When a feeding coupler is pressed by a receiving coupler, the feeding coupler is disengaged by a first engaging member of a fixing mechanism so as to be displaceable along an electric vehicle, and also disengaged by a second engaging member of the fixing mechanism so as to be angularly movable with respect to a displacing mechanism. The feeding mechanism then engages the receiving coupler, and starts charging the battery on the electric vehicle.

6 Claims, 17 Drawing Sheets

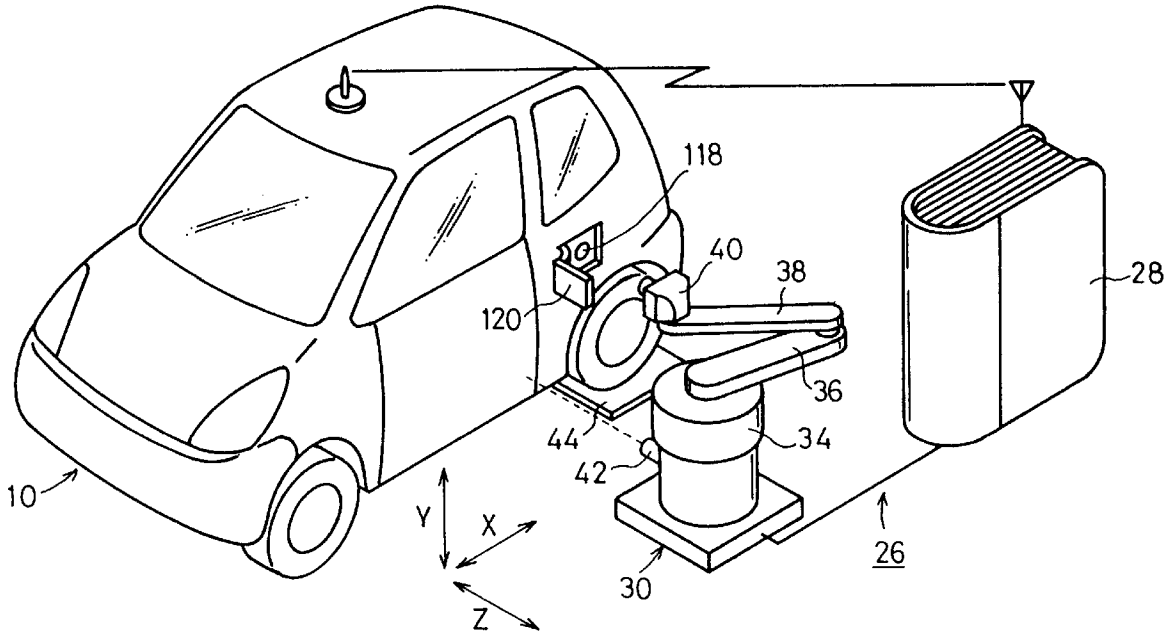

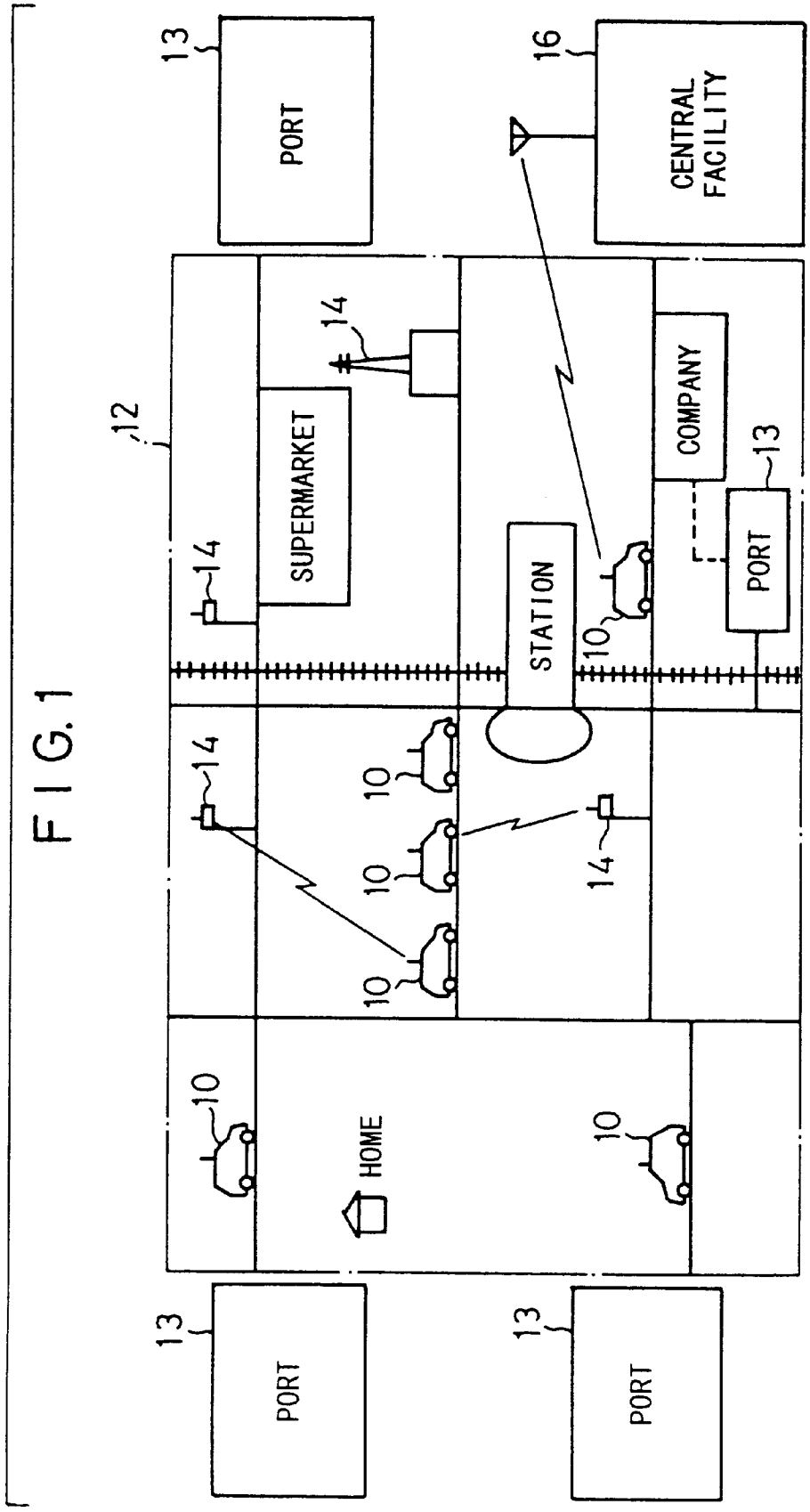
13
PORT
16
CENTRAL FACILITY
12
14
SUPERMARKET
COMPANY
13
PORT
STATION
10
14
10
10
10
14
10
HOME
10
13
PORT
13
PORT

FIG. 1

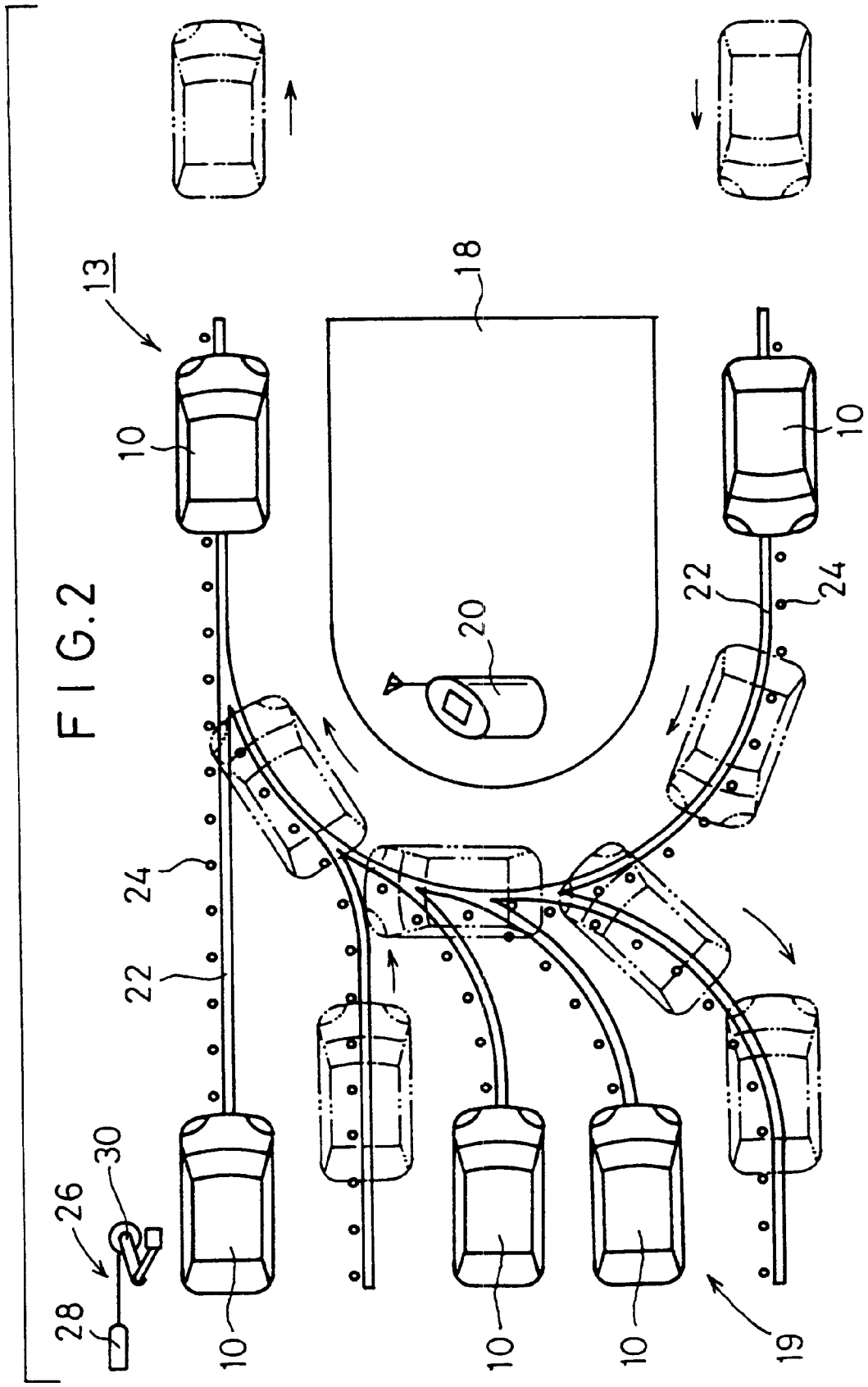

FIG.2

FIG.3

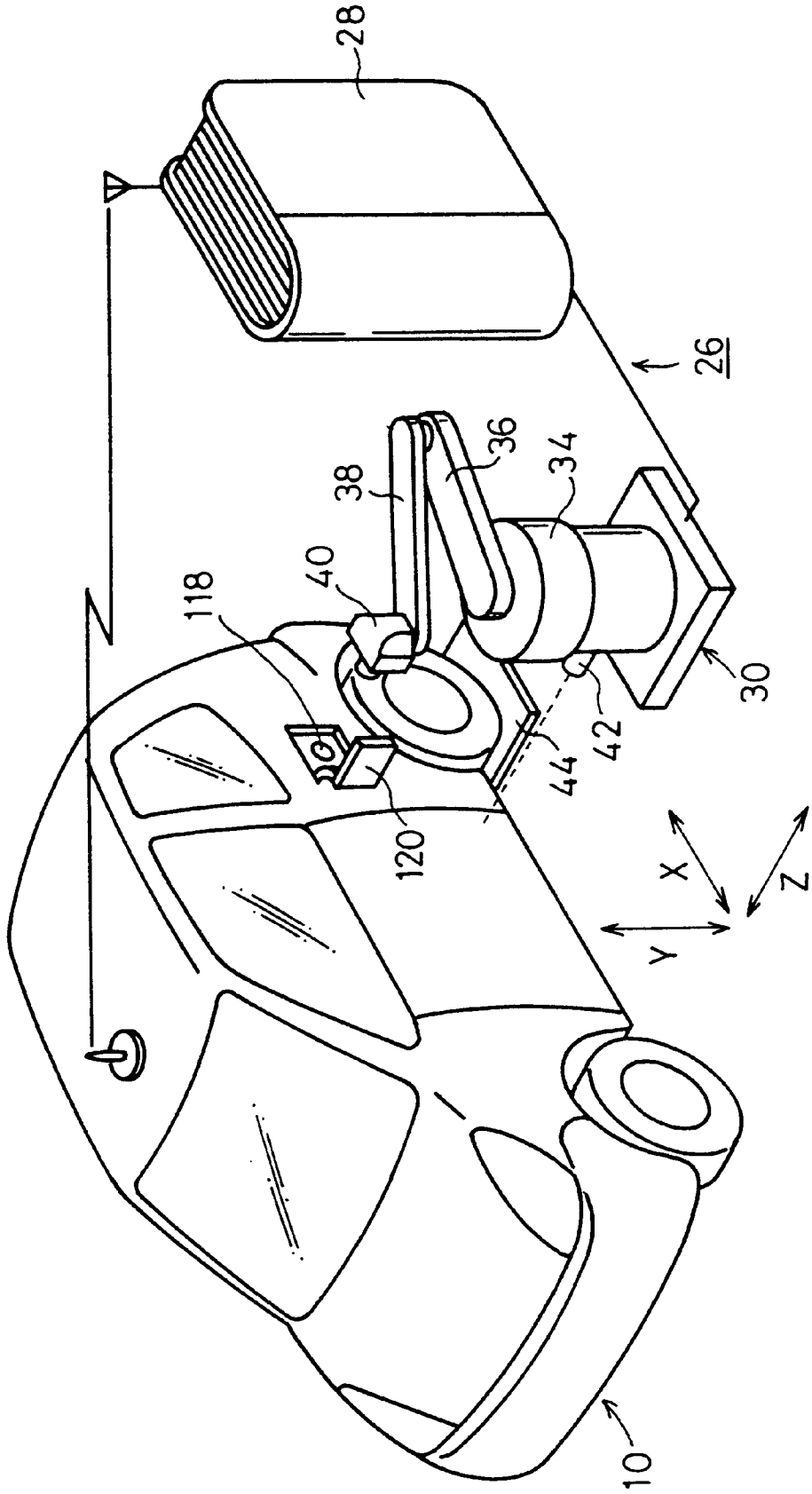

FIG. 4

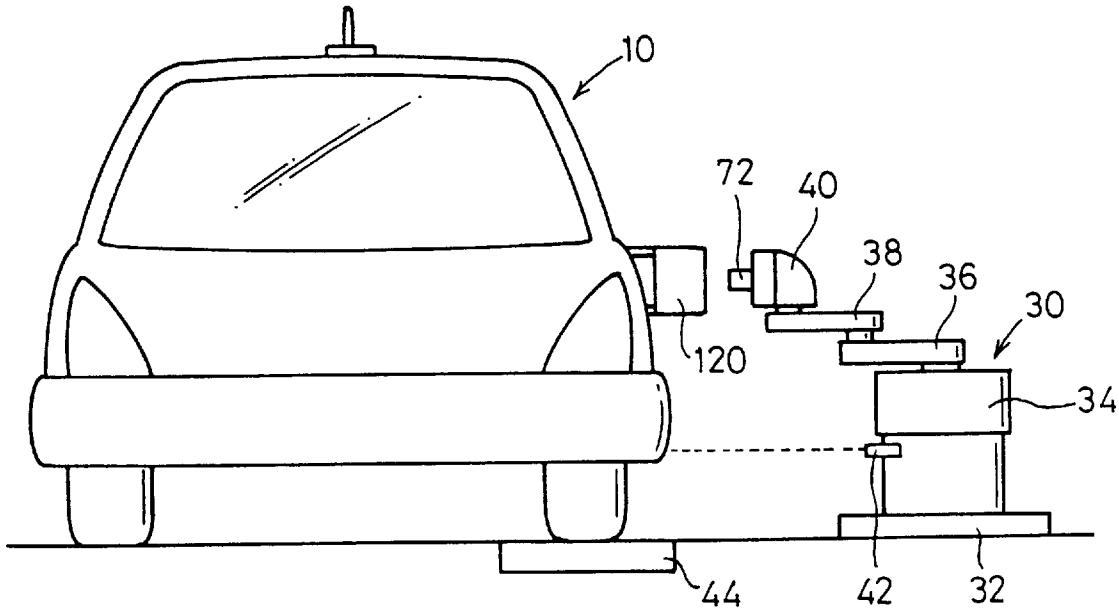

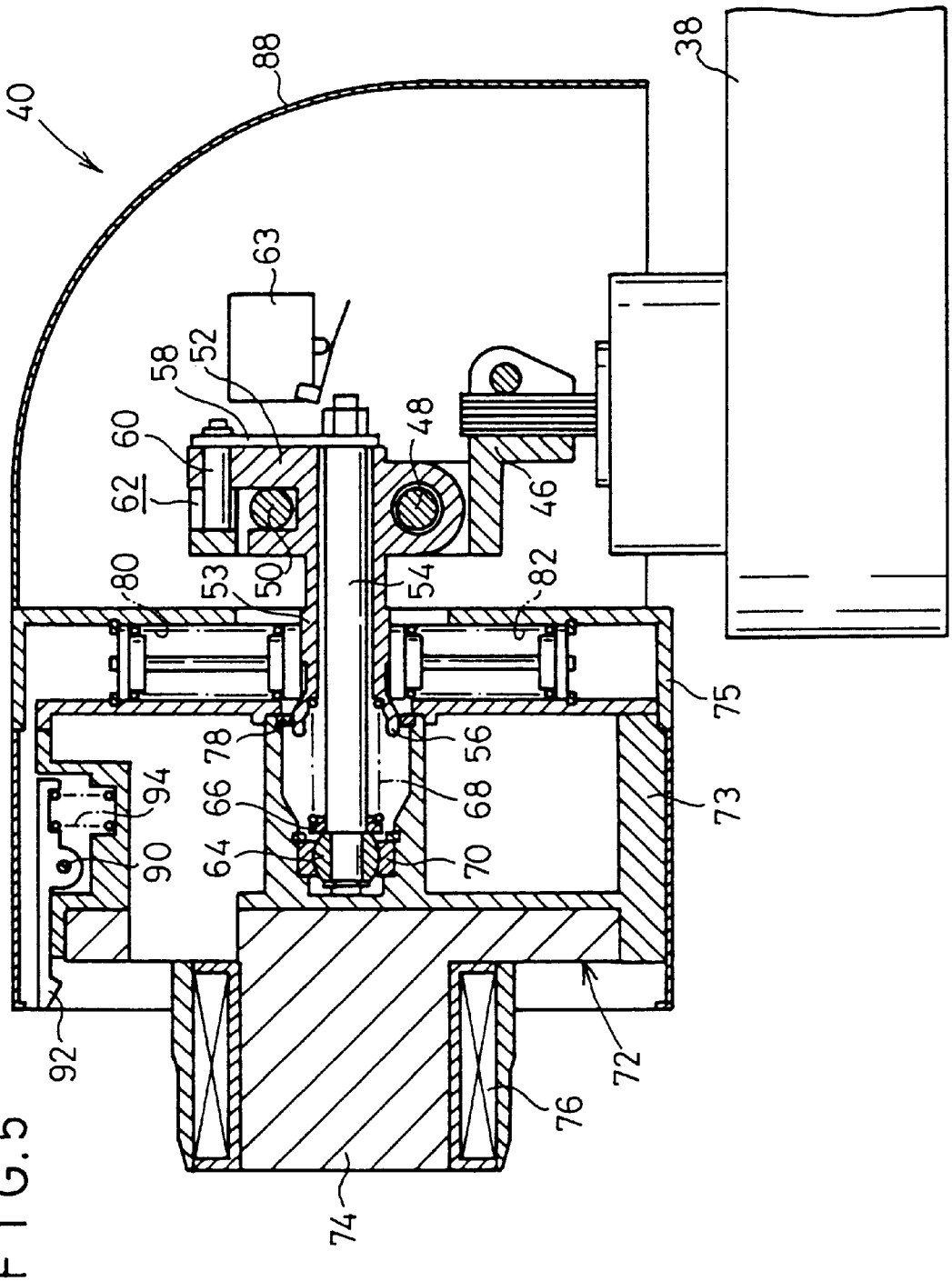
40
88
38
63
58
52
60
62
48
46
80
53
50
54
82
75
78
56
66
68
73
94
90
64
70
92
72
76
74

FIG.5

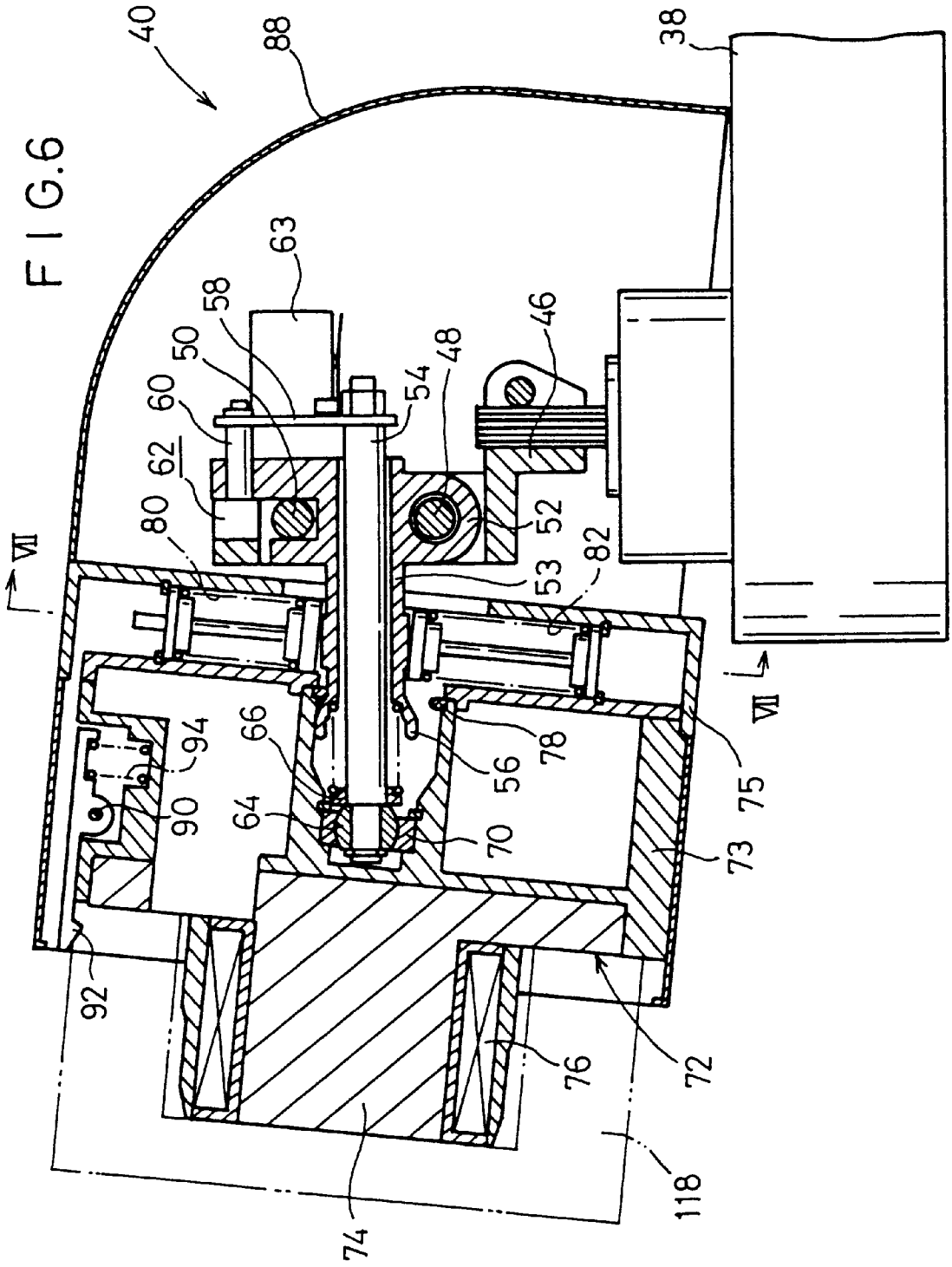
40
88
38
63
58
50
60
62
80
54
48
46
52
53
82
VII
VII
94
90
66
64
56
78
70
75
73
92
76
72
74
118

FIG.6

FIG. 7

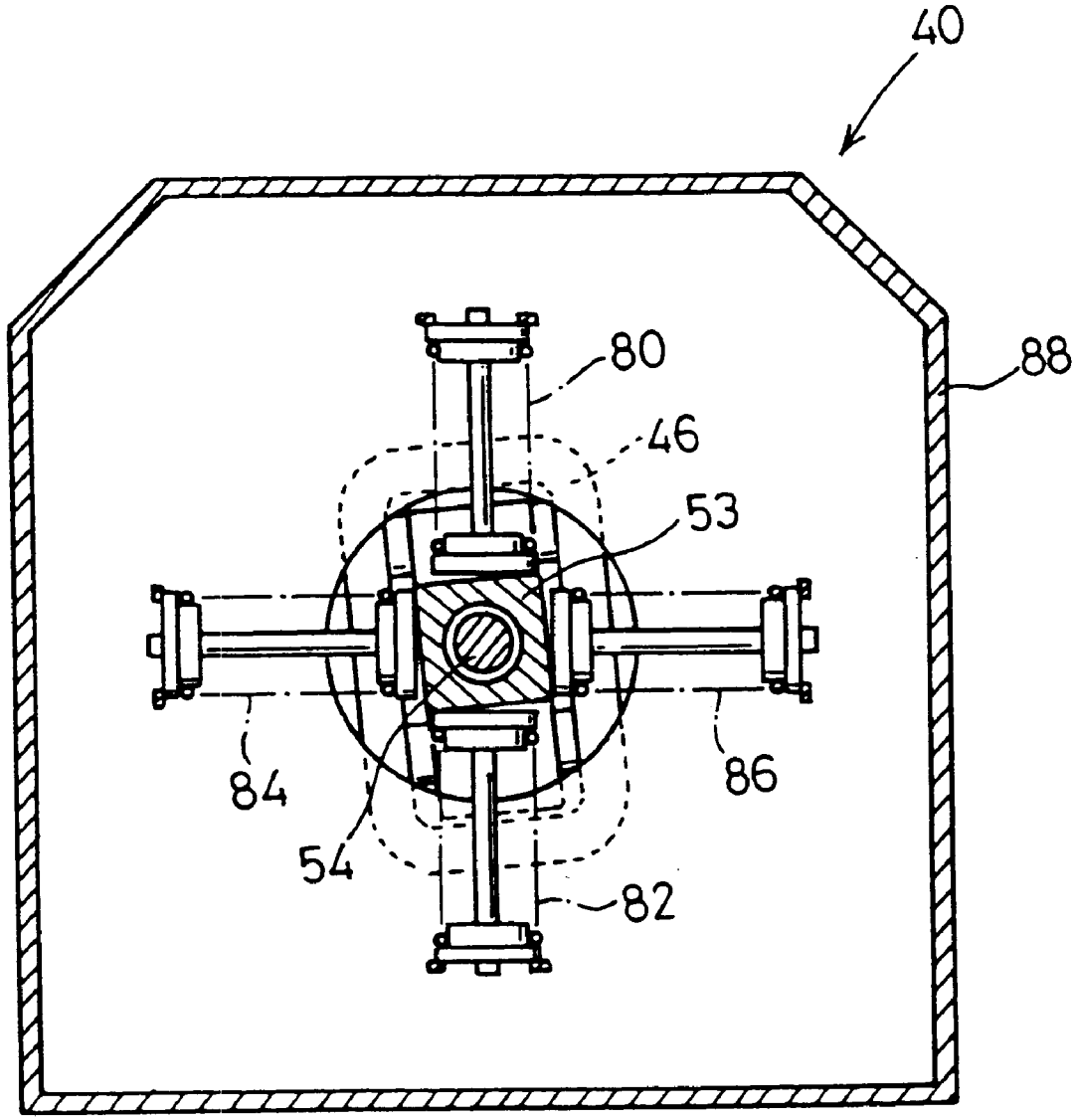

FIG. 8

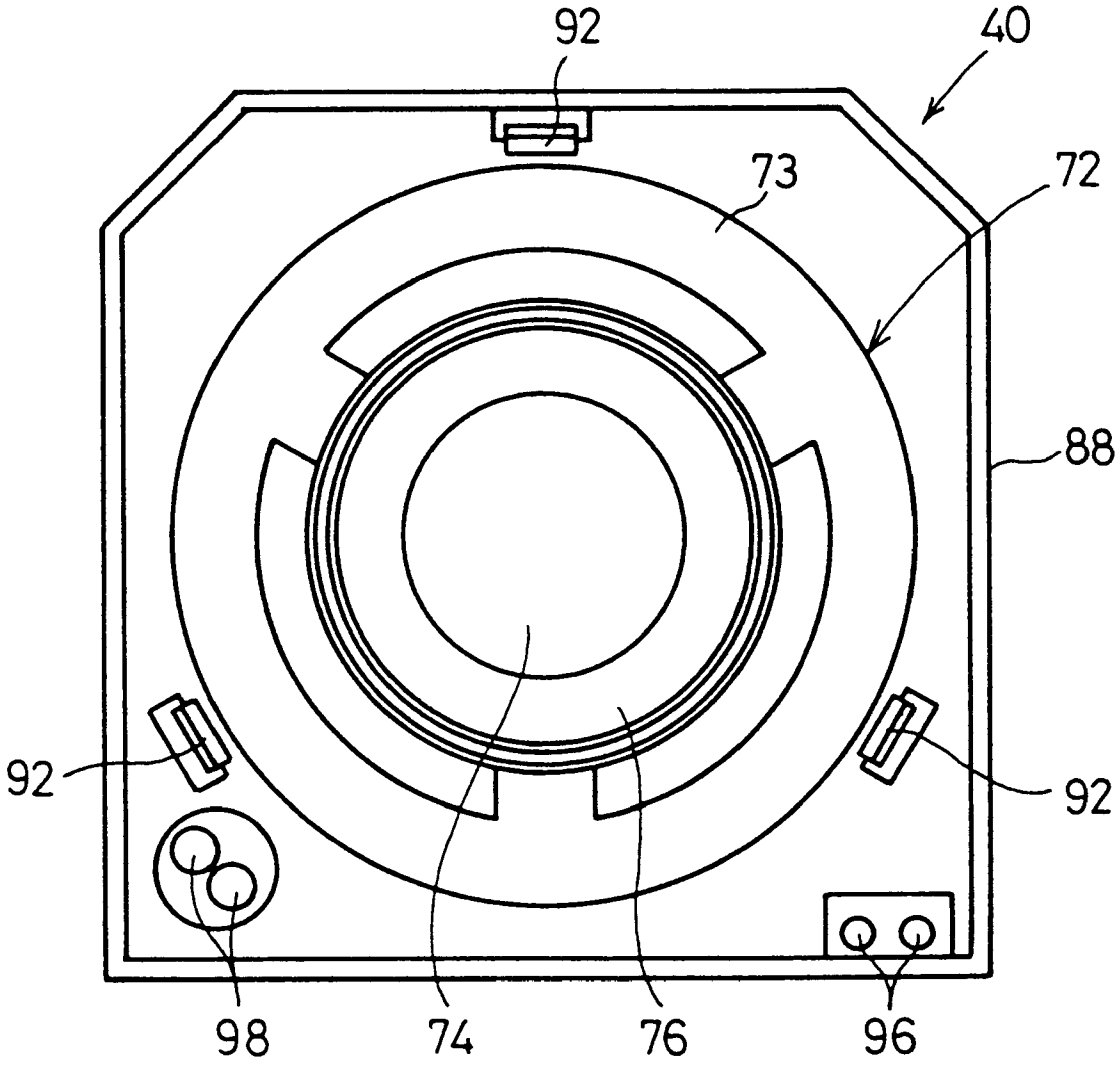

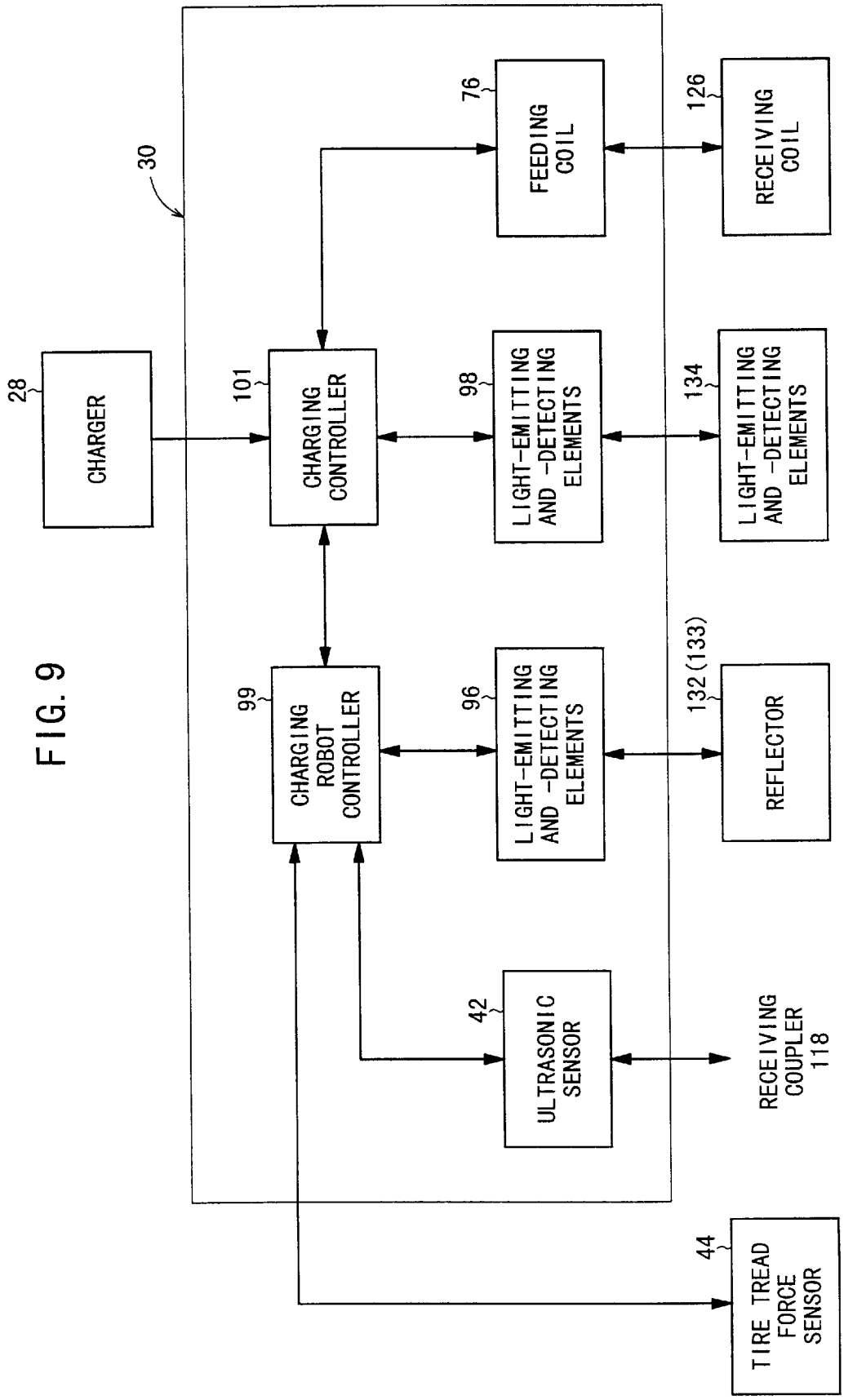
30
28
CHARGER
101
CHARGING CONTROLLER
76
FEEDING COIL
126
RECEIVING COIL
98
LIGHT-EMITTING AND -DETECTING ELEMENTS
134
LIGHT-EMITTING AND -DETECTING ELEMENTS
99
CHARGING ROBOT CONTROLLER
96
LIGHT-EMITTING AND -DETECTING ELEMENTS
132 (133)
REFLECTOR
42
ULTRASONIC SENSOR
RECEIVING COUPLER 118
44
TIRE TREAD FORCE SENSOR

FIG. 9

FIG.10

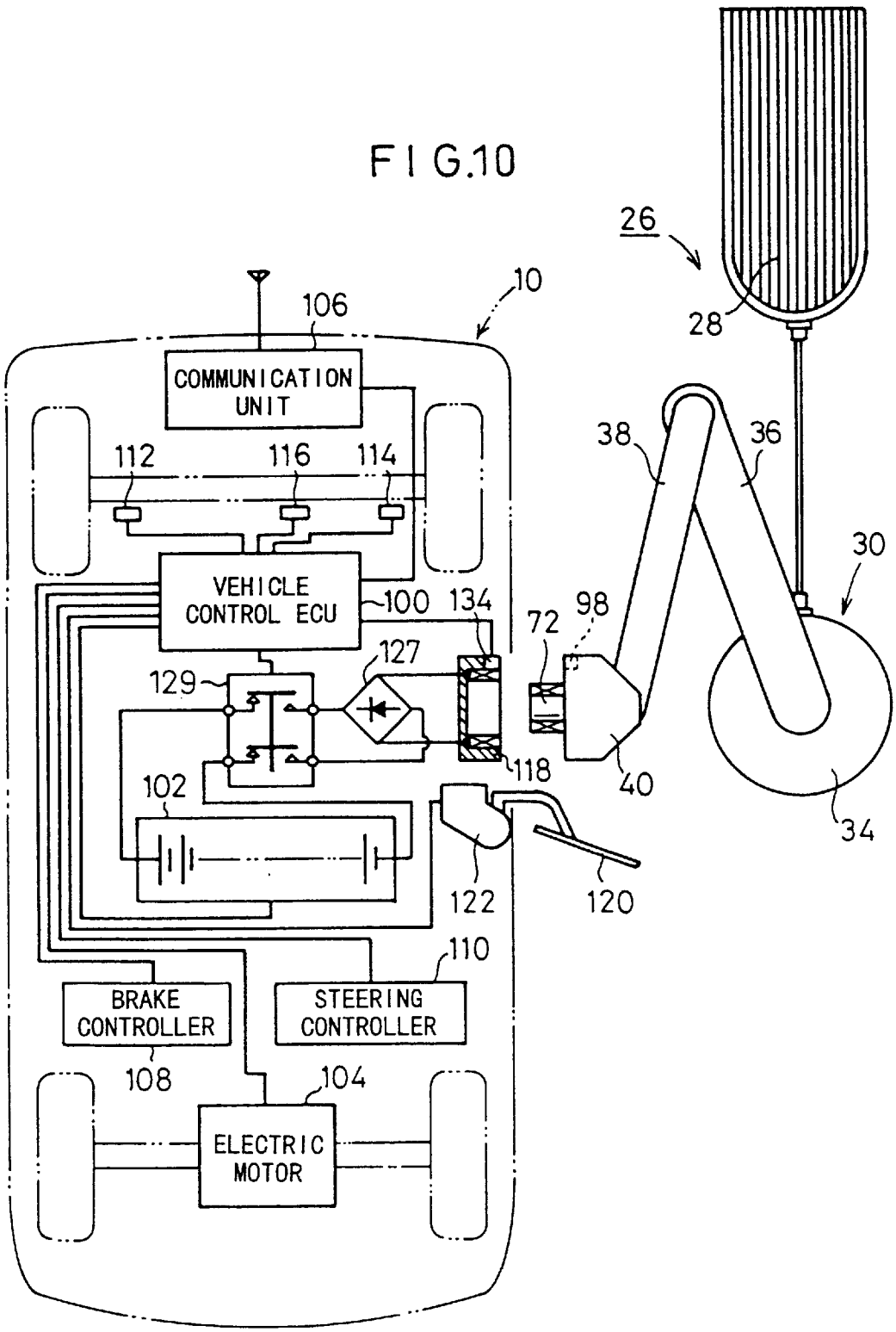
26
10
106
28
COMMUNICATION UNIT
38
36
112
116
114
30
VEHICLE CONTROL ECU
100
134
72
98
127
129
118
40
102
34
122
120
110
BRAKE CONTROLLER
STEERING CONTROLLER
108
104
ELECTRIC MOTOR

FIG.11

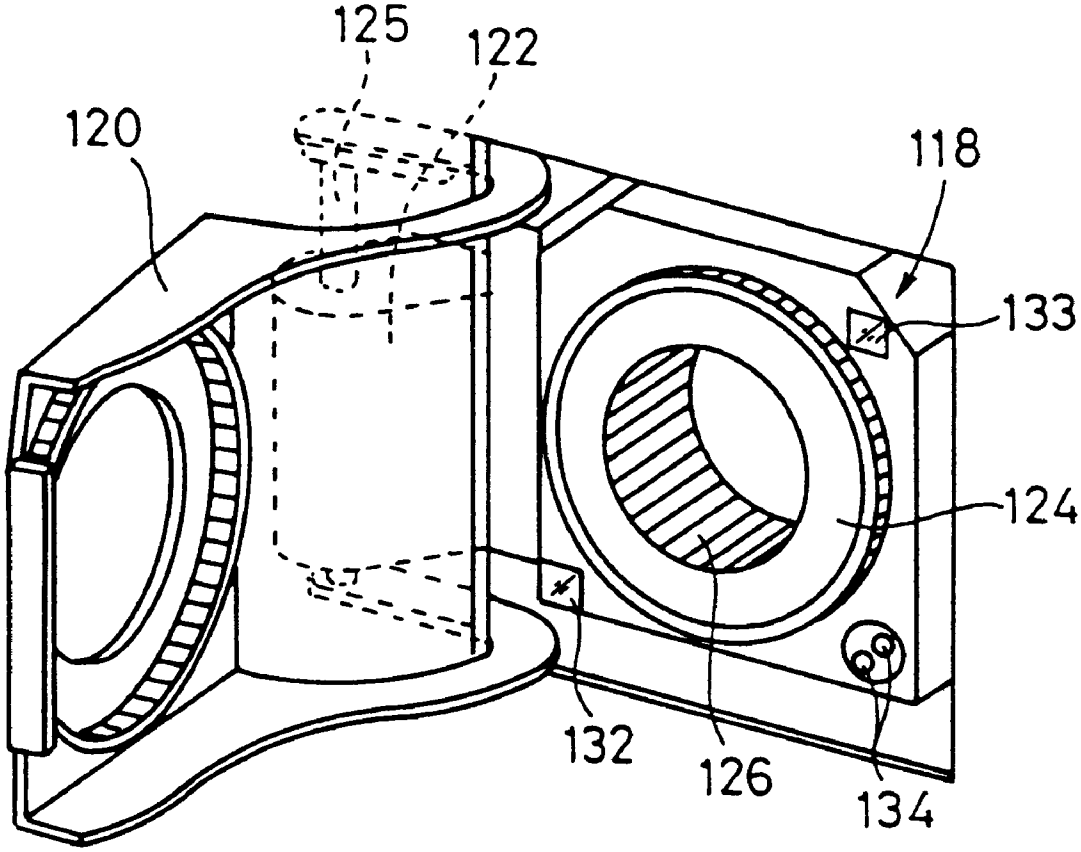

FIG.12

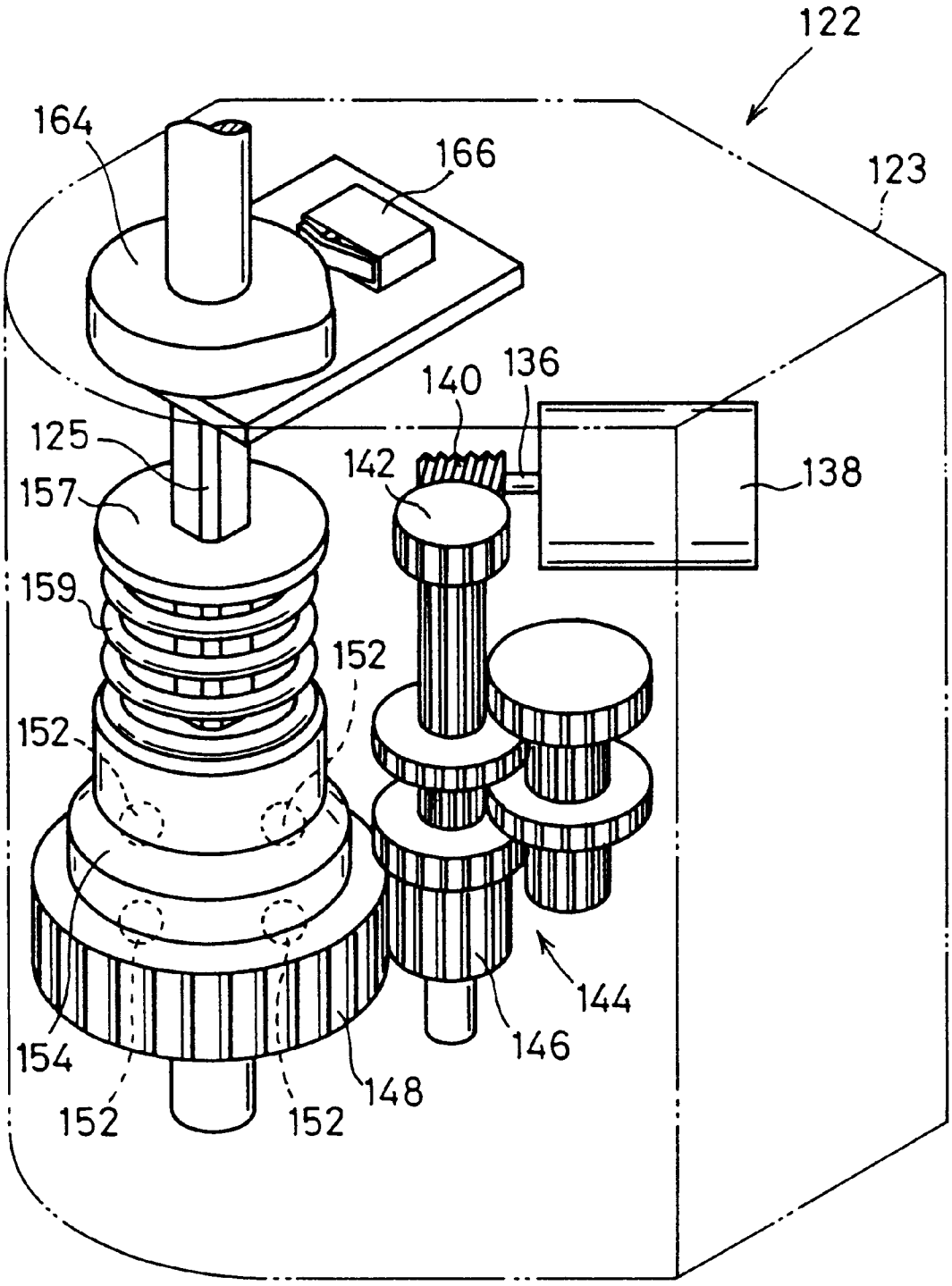
122
123
164
166
140
136
125
142
138
157
159
152
152
144
146
154
148
152
152

FIG.13

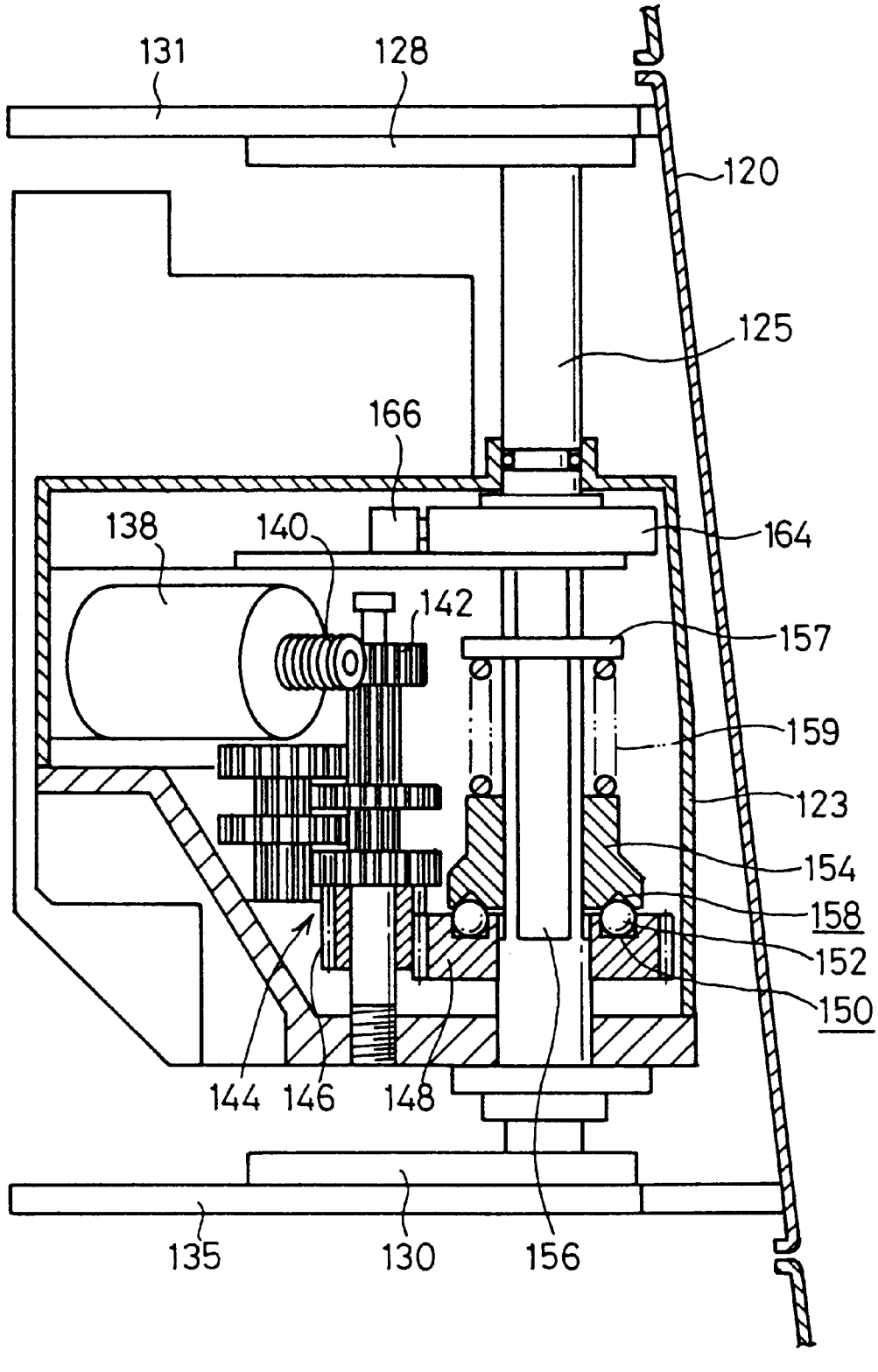
131
128
120
125
166
138
140
164
142
157
159
123
154
158
152
150
144
146
148
135
130
156

FIG. 14

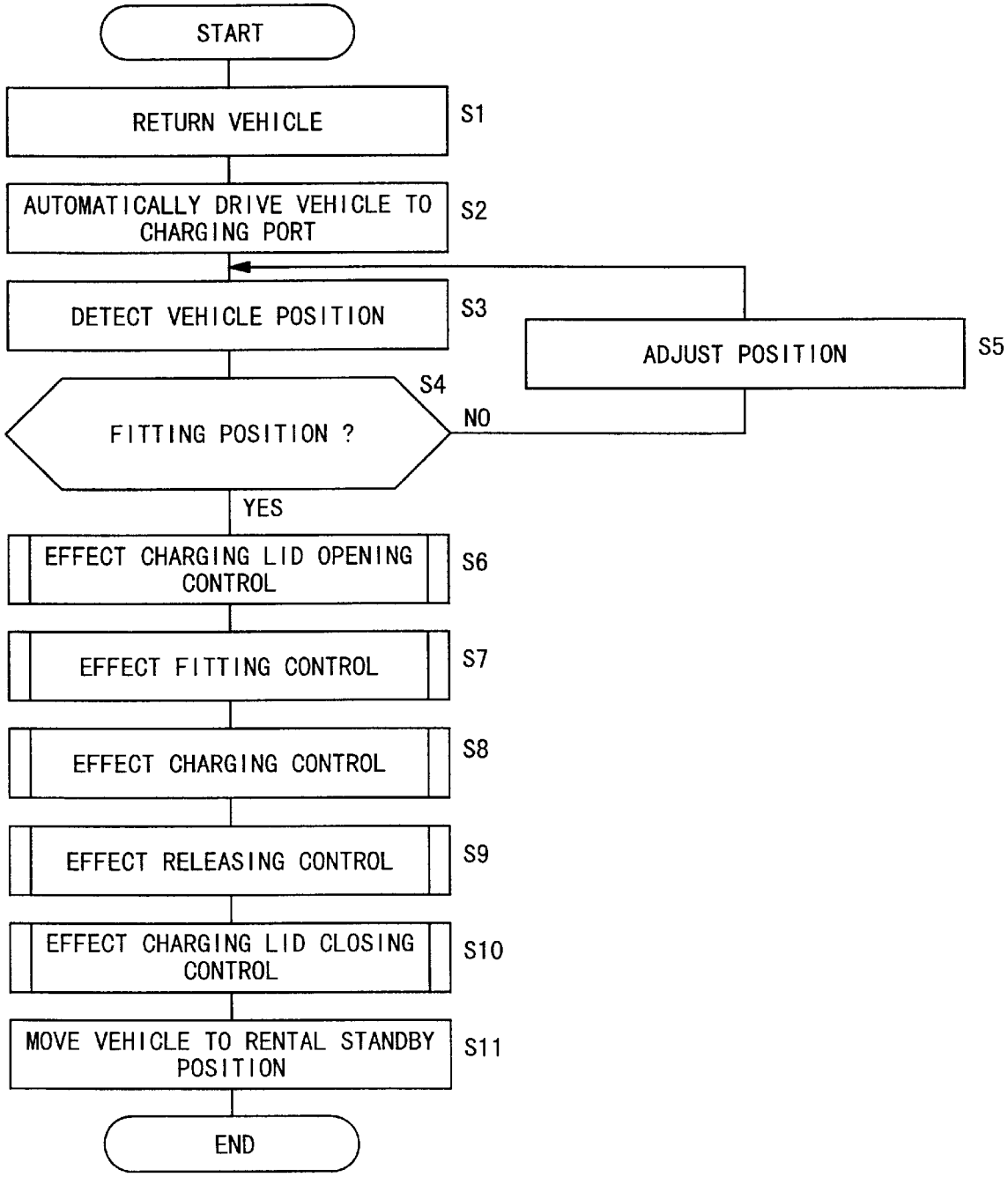
START
RETURN VEHICLE
S1
AUTOMATICALLY DRIVE VEHICLE TO CHARGING PORT
S2
DETECT VEHICLE POSITION
S3
ADJUST POSITION
S5
S4
FITTING POSITION ?
NO
YES
EFFECT CHARGING LID OPENING CONTROL
S6
EFFECT FITTING CONTROL
S7
EFFECT CHARGING CONTROL
S8
EFFECT RELEASING CONTROL
S9
EFFECT CHARGING LID CLOSING CONTROL
S10
MOVE VEHICLE TO RENTAL STANDBY POSITION
S11
END

FIG. 15

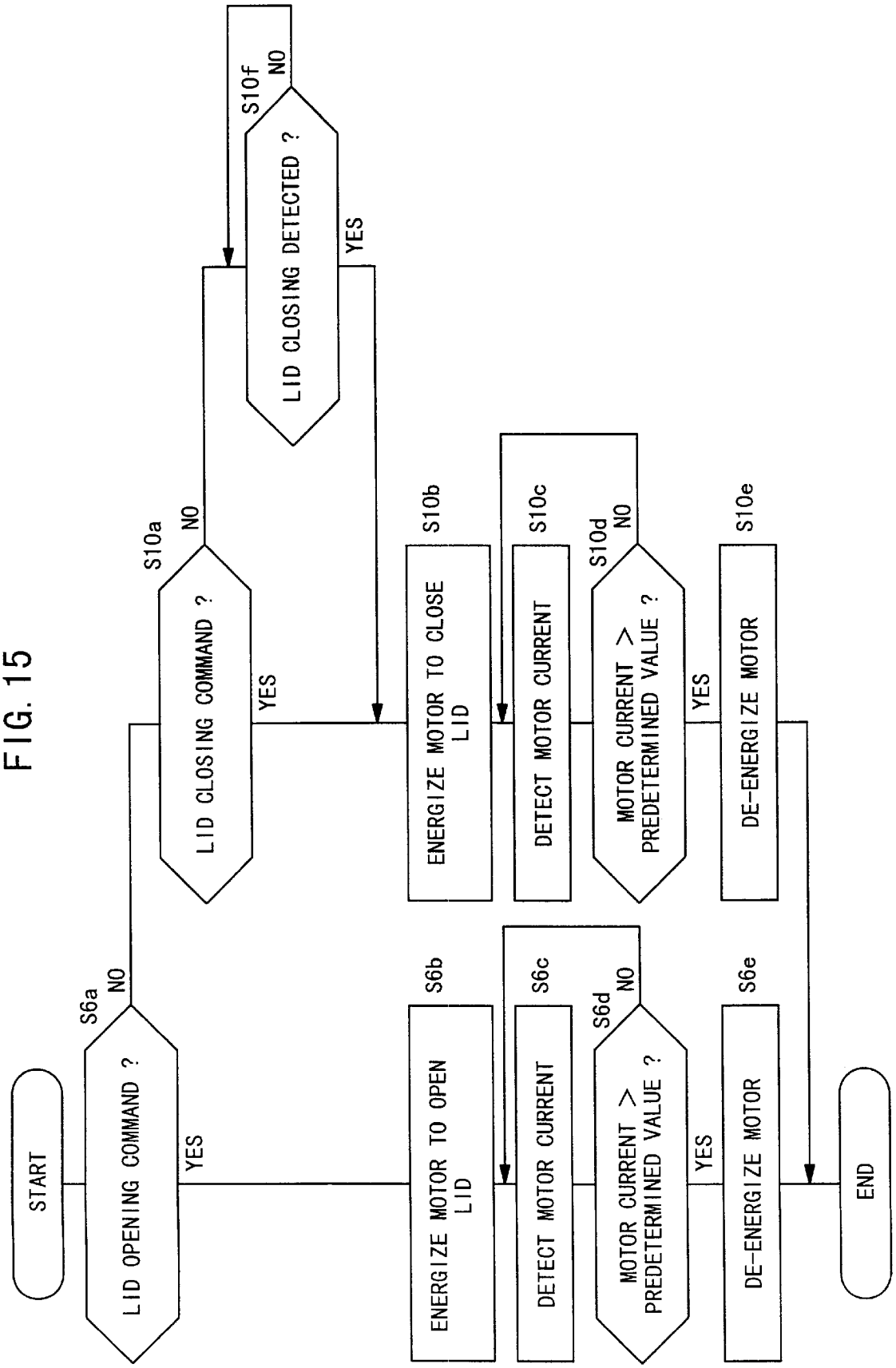
START
LID OPENING COMMAND ?
S6a
NO
YES
LID CLOSING COMMAND ?
S10a
NO
YES
ENERGIZE MOTOR TO OPEN LID
S6b
ENERGIZE MOTOR TO CLOSE LID
S10b
DETECT MOTOR CURRENT
S6c
DETECT MOTOR CURRENT
S10c
MOTOR CURRENT > PREDETERMINED VALUE ?
S6d
NO
YES
MOTOR CURRENT > PREDETERMINED VALUE ?
S10d
NO
YES
DE-ENERGIZE MOTOR
S6e
DE-ENERGIZE MOTOR
S10e
END
LID CLOSING DETECTED ?
S10f
NO
YES

FIG. 16

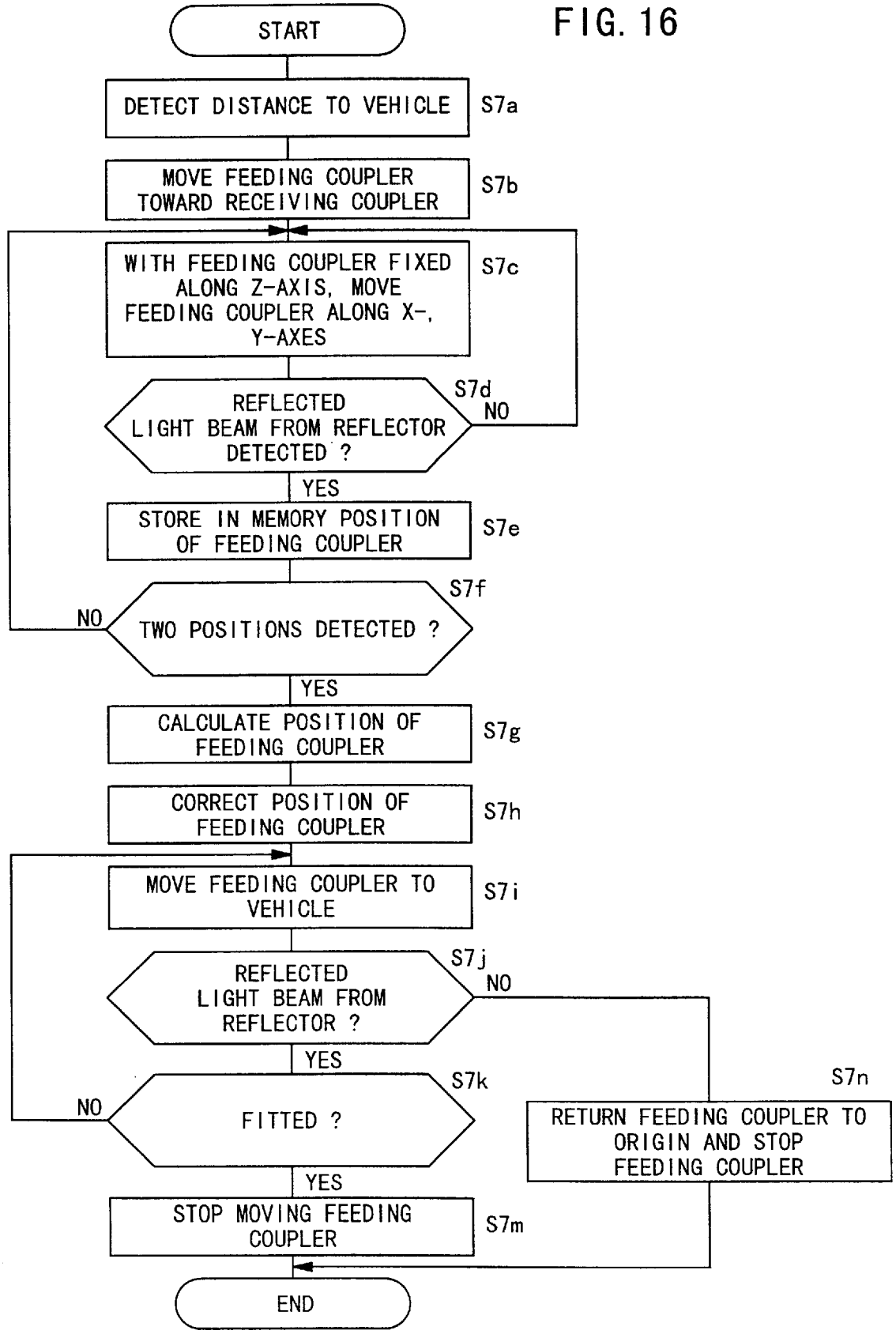
START
DETECT DISTANCE TO VEHICLE
S7a
MOVE FEEDING COUPLER TOWARD RECEIVING COUPLER
S7b
WITH FEEDING COUPLER FIXED ALONG Z-AXIS, MOVE FEEDING COUPLER ALONG X-, Y-AXES
S7c
REFLECTED LIGHT BEAM FROM REFLECTOR DETECTED ?
S7d
NO
YES
STORE IN MEMORY POSITION OF FEEDING COUPLER
S7e
TWO POSITIONS DETECTED ?
S7f
NO
YES
CALCULATE POSITION OF FEEDING COUPLER
S7g
CORRECT POSITION OF FEEDING COUPLER
S7h
MOVE FEEDING COUPLER TO VEHICLE
S7i
REFLECTED LIGHT BEAM FROM REFLECTOR ?
S7j
NO
YES
FITTED ?
S7k
NO
YES
RETURN FEEDING COUPLER TO ORIGIN AND STOP FEEDING COUPLER
S7n
STOP MOVING FEEDING COUPLER
S7m
END

FIG. 17

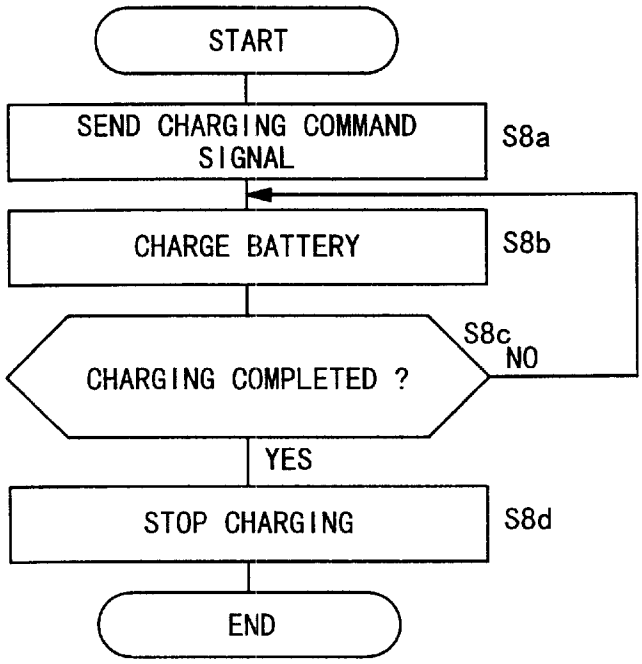
START
SEND CHARGING COMMAND SIGNAL
S8a
CHARGE BATTERY
S8b
S8c
NO
CHARGING COMPLETED ?
YES
STOP CHARGING
S8d
END

FIG. 18

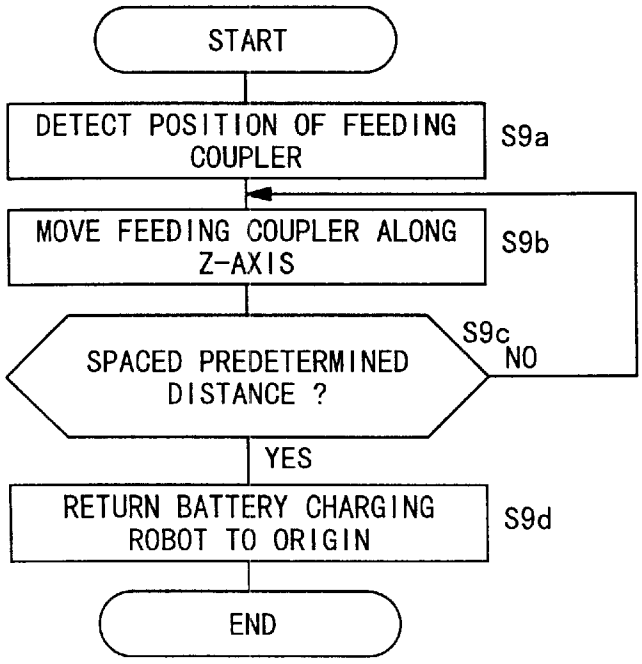
START
DETECT POSITION OF FEEDING COUPLER
S9a
MOVE FEEDING COUPLER ALONG Z-AXIS
S9b
S9c
NO
SPACED PREDETERMINED DISTANCE ?
YES
RETURN BATTERY CHARGING ROBOT TO ORIGIN
S9d
END

BATTERY CHARGING APPARATUS FOR ELECTRIC VEHICLES

BACKGROUND OF THE INVENTION

1. Field of the Invention

The present invention relates to a battery charging apparatus for supplying electric energy to the battery of a battery-powered electric vehicle through a receiving coupler mounted on the electric vehicle.

2. Description of the Related Art

Recent years have seen progress in the development of electric vehicles as means of transportation for reducing the rate of consumption of existing fossil fuels and avoiding possible environmental pollution. Electric vehicles are powered by electric energy stored in and supplied from batteries mounted thereon. The battery on an electric vehicle needs to be charged with electric energy from an external source from time to time. For supplying electric energy to the battery, the electric vehicle has a receiving coupler that can be fitted over an energy supplying coupler of an electric energy supply station.

If, when the electric vehicle is moved to the electric energy supply station, the energy supplying coupler can automatically engage the receiving coupler and start automatically charging the battery through the receiving coupler, then the burden on attendants at the electric energy supply station can be minimized.

One battery charging apparatus which is capable of such automatic battery charging operation is disclosed in Japanese laid-open patent publication No. 6-14408, for example. According to the disclosed battery charging apparatus, the two-dimensional position and attitude of an electric vehicle with respect to a battery charging apparatus are detected by a position detector, and the feeding coupler of the battery charging apparatus is displaced on the basis of the detected two-dimensional position and attitude, so that the feeding coupler can be connected to the receiving coupler.

Japanese laid-open patent publication No. 9-182212 discloses another battery charging apparatus which has a position detector disposed so as to face the front side of an electric vehicle, for detecting a lateral position of the electric vehicle. The feeding coupler of the battery charging apparatus is displaced on the basis of the detected position, so that the feeding coupler can be connected to the receiving coupler.

According to the above conventional battery charging apparatus, however, since the coupling accuracy with which the feeding coupler is connected to the receiving coupler depends on only the position detector of the battery charging apparatus, if the coupling accuracy is to be increased, then not only the positional detector needs to be highly accurate, but also the feeding coupler has to be displaced by a highly accurate mechanism. As a consequence, the conventional battery charging apparatus are necessarily highly expensive to manufacture.

Furthermore, because the couplers would tend to be damaged if the electric vehicle happened to move while the battery is being charged, it is necessary for the conventional battery charging apparatus to perform a control process for detecting the position and attitude of the electric vehicle at all times during the charging of the battery, and effecting positional correction of the electric vehicle. Such a control process may be dispensed with by making the feeding coupler angularly movable to accommodate accidental movement of the electric vehicle. However, when the feeding coupler swings in the process of being coupled to the receiving coupler, the feeding coupler and the receiving coupler may not be able to achieve a desired exact coupling therebetween, and may possibly be damaged.

SUMMARY OF THE INVENTION

It is therefore a general object of the present invention to provide a battery charging apparatus which is of a relatively simple structure capable of connecting a feeding coupler highly accurately to a receiving coupler on an electric vehicle, and continuing to charge the battery on the electric vehicle without being affected by positional changes of the electric vehicle while the feeding coupler and the receiving coupler are being coupled to each other.

Another object of the present invention is to provide a battery charging apparatus which is free of excessive loads on a feeding coupler and a receiving coupler when they are connected to each other, and hence prevents the feeding coupler and the receiving coupler from being damaged.

Still object of the present invention is to provide a battery charging apparatus which is of a relatively simple structure capable of connecting a feeding coupler and a receiving coupler to each other.

The above and other objects, features, and advantages of the present invention will become more apparent from the following description when taken in conjunction with the accompanying drawings in which a preferred embodiment of the present invention is shown by way of illustrative example.

BRIEF DESCRIPTION OF THE DRAWINGS

FIG. **1** is a schematic plan view of an electric vehicle sharing system which incorporates the principles of the present invention;

FIG. **2** is a schematic plan view of a port for storing electric vehicles, of the electric vehicle sharing system;

FIG. **3** is a perspective view of an electric vehicle and a battery charging apparatus in a charging port;

FIG. **4** is an elevational view of the electric vehicle and the battery charging apparatus in the charging port;

FIG. **5** is a cross-sectional view of a feeding coupler of a battery charging robot;

FIG. **6** is a cross-sectional view of the feeding coupler which has been angularly moved;

FIG. **7** is a cross-sectional view taken along line VII–VII of FIG. **6**;

FIG. **8** is a front elevational view of the feeding coupler shown in FIG. **5**;

FIG. **9** is a block diagram of an electric system of the battery charging robot;

FIG. **10** is a block diagram of an electric system of the electric vehicle;

FIG. **11** is a perspective view of a receiving coupler and a charging lid of the electric vehicle;

FIG. **12** is a perspective view of a charging lid opening and closing device;

FIG. **13** is a cross-sectional view of the charging lid opening and closing device;

FIG. **14** is a flowchart of a processing sequence from the return of an electric vehicle to the completion of battery charging;

FIG. **15** is a flowchart of a processing sequence of a control process for opening and closing the charging lid;

FIG. **16** is a flowchart of a processing sequence of a process for fitting the feeding coupler, which is carried out by the battery charging robot;

FIG. **17** is a flowchart of a processing sequence of a battery charging process carried out by the battery charging robot; and

FIG. **18** is a flowchart of a processing sequence of a process for releasing the feeding coupler, which is carried out by the battery charging robot.

DESCRIPTION OF THE PREFERRED EMBODIMENT

FIG. **1** schematically shows an electric vehicle sharing system which incorporates the principles of the present invention.

The electric vehicle sharing system shown in FIG. **1** is a system for allowing a plurality of users to share a plurality of electric vehicles **10**. The electric vehicle sharing system covers an area **12** where the users can drive the available electric vehicles **10**. The area **12** is combined with a plurality of ports **13** where a plurality of electric vehicles **10** can be parked. A user, i.e., a driver, rents an electric vehicle **10** from a port **13** near the driver's house or company, drives the electric vehicle **10** from the port **13** to a nearby station or supermarket, for example, accomplishes whatever the purpose may be, and thereafter returns the electric vehicle **10** to a nearby port **13**. The area **12** contains a plurality of communication means **14** for transmitting and receiving information relative to the status of usage of the electric vehicles **10** by way of suitable communications. The received information is sent from the communication means **14** to a central facility **16** of the electric vehicle sharing system.

FIG. **2** schematically shows in plan structural details of each of the ports **13**. As shown in FIG. **2**, the port **13** comprises a platform **18** where users rent and return electric vehicles **10**, and a plurality of parking areas **19** for pooling a plurality of electric vehicles **10**. The platform **18** has a port terminal control unit **20** for performing vehicle renting and returning processes. Specifically, a user rents a desired electric vehicle **10** or returns a used electric vehicle **10**, using an IC (Integrated Circuit) card storing usage information, etc., at the port terminal control unit **20**.

Induction cables **22** and magnetic nails **24** are embedded in each of the ports **13** along routes between the platform **18** and the parking areas **19**, for automatically driving the electric vehicles **10**. One of the parking areas **19** is associated with a battery charging apparatus **26** for charging the battery on an electric vehicle **10** that is parked in the parking area **19**.

FIGS. **3** and **4** show the battery charging apparatus **26** and an electric vehicle **10** parked in the parking area **19** which is equipped with the battery charging apparatus **26**. The battery charging apparatus **26** comprises a charger **28** for supplying electric energy based on a charging command signal from the electric vehicle **10** and stopping the supply of electric energy based on a charging completion signal from the electric vehicle **10**, and a battery charging robot **30** connected to the charger **28** for automatically charging the battery on the electric vehicle **10**.

The battery charging robot **30**, as an example of a displacement mechanism, comprises a robot body **34** mounted on a base **32**, a first arm **36** having an end pivotally supported on the robot body **34**, a second arm **38** having an end pivotally supported on the other end of the first arm **36**, and a feeding coupler **40** angularly movably supported on the other end of the second arm **38**. The robot body **34** is vertically movable along a Y-axis, which is perpendicular to other horizontal X- and Z-axes, and the first arm **36** and the second arm **38** are swingable about respective axes on the robot body **34** and the first arm **36**. Therefore, the feeding coupler **40** angularly movably supported on the end of the second arm **38** can be displaced three-dimensionally along X-, Y-, and Z-axes.

An ultrasonic sensor **42** for detecting a distance from a receiving coupler **118** of the electric vehicle **10** along the Z-axis is mounted on the base **32** of the battery charging robot **30**. The parking area **19** also has a tire tread force sensor **44** for detecting the position of the electric vehicle **10** along the X- and Z-axes based on the placement of a rear wheel of the electric vehicle **10** on the tire tread force sensor **44**. The tire tread force sensor **44** may be replaced with a CCD camera or the like for detecting the positions of the electric vehicle **10** along the X- and Z-axes.

FIGS. **5** through **8** show structural details of the feeding coupler **40** of the battery charging robot **30**. The feeding coupler **40** is mounted on the end of the second arm **38** by a first bracket **46**. To the first bracket **46**, there is coupled a second bracket **52** by two pins **48**, **50** for displacement along the X-axis, i.e., directions normal to the sheets of FIGS. **5** and **6**. The second bracket **52** has an integral sleeve **53** extending horizontally and including an intermediate portion which has a prismatic outer shape. A shaft **54** is axially slidably inserted in the sleeve **53**. First and second brackets **46**, **52**, pins **48**, **58**, sleeve **53** and shaft **54** form an embodiment of a fixing mechanism. The sleeve **53** has an open end positioned remotely from the first bracket **46** and shaped into a skirt **56** having a circular outer contour.

A stop pin **60** is coupled by a plate **58** to an end of the shaft **54** which passes through the second bracket **52**. When the stop pin **60** engages in a hole **62** defined in the first bracket **46**, the feeding coupler **40** is prevented from being displaced along the X-axis. A limit switch **63** for detecting axial displacement of the shaft **54** is disposed near the end of the shaft **54** which is close to the first bracket **46**. A ball **64** is mounted on the other end of the shaft **54**, with a collar **66** mounted on the shaft **54** against the ball **64**. A helical spring **68** is disposed around the shaft **54** between the skirt **56** and the collar **66**.

The feeding coupler **40** has a coupler body **72** angularly movably supported on the ball **64** on the end of the shaft **54** by a bearing **70**. The coupler body **72** comprises a bracket **73** supporting the bearing **70**, a core **74** joined to the bracket **73**, and a feeding coil **76** wound around a block of the core **74** which projects toward the electric vehicle **10**. The bracket **73** has a hollow cylindrical central member which holds therein a doughnut-shaped stop ring **78** engaging the skirt **56** of the second bracket **52**. To the bracket **73**, there is connected a holder **75** which holds therein four springs or resilient members **80**, **82**, **84**, **86** extending radially and angularly positioned at equal angular intervals. This is one embodiment of a support mechanism. The springs **80**, **82**, **84**, **86** have respective radially inner ends held against respective outer surfaces of the intermediate portion of the sleeve **53** which has the prismatic outer shape.

The feeding coupler **40** also has a casing **88** surrounding the components thereof. Three locking hooks **92** are angularly movably mounted by shafts **90** on an inner surface of the casing **88** near the electric vehicle **10**. The locking hooks **92** are held in locking engagement with the electric vehicle **10** when the battery on the electric vehicle **10** is charged by the battery charging robot **30**. The locking hooks **92**, which

are angularly movable about the shafts **90**, are normally urged in a direction to keep locking engagement with the electric vehicle **10** by springs **94** acting between the bracket **73** and ends of the locking hooks **92**. The feeding coupler **40** has, on its surface facing the electric vehicle **10**, a pair of light-emitting and -detecting elements **96** for confirming the position of the electric vehicle **10** with respect to the battery charging robot **30**, and a pair of light-emitting and detecting elements **98** for exchanging various signals with respect to the charging of the battery, e.g., receiving a charging command signal and a charging completion signal from the electric vehicle **10**.

FIG. **9** shows an electric system, including a control circuit, of the battery charging robot **30**. The control circuit has a charging robot controller **99** for controlling operation of the battery charging robot **30**, and a charging controller **101** for controlling the charging of the battery based on control signals from the electric vehicle **10**. The ultrasonic sensor **42**, the tire tread force sensor **44**, and the light-emitting and -detecting elements **96** are connected to the charging robot controller **99** for controlling operation of the robot body **34**, the first arm **36**, and the second arm **38**. The charger **28**, the charging coil **76**, and the light-emitting and -detecting elements **98** are connected to the charging controller **101**.

The electric vehicle **10** that can automatically be charged by the battery charging apparatus **26** is constructed as shown in FIG. **10**. As shown in FIG. **10**, the electric vehicle **10** comprises a vehicle control ECU **100** for controlling entire operation of the electric vehicle **10** including vehicle driving operation and battery charging operation, a battery **102** for storing electric energy for propelling the electric vehicle **10**, and an electric motor **104** for propelling the electric vehicle **10** based on the electric energy supplied from the battery **102**. To the vehicle control ECU **100**, there are connected a communication unit **106** for performing communication with an external circuit, a brake controller **108** and a steering controller **110** for automatically driving the electric vehicle **10**, a pair of sensors **112**, **114** for detecting the induction cables **22** embedded in the port **13** (see FIG. **2**), and a sensor **116** for detecting the magnetic nails **24** embedded in the port **13**.

The sensors **112**, **114** serve to detect a magnetic field generated by an alternating current flowing through an induction cable **22** (see FIG. **2**), and are laterally spaced along the rear axle of the electric vehicle **10**. When the electric vehicle **10** runs along and over an induction cable **22**, the sensors **112**, **114** produce identical output signals. When the electric vehicle **10** is laterally displaced, one of the sensors **112**, **114** produces an output signal greater than the output signal produced by the other of the sensors **112**, **114**, detecting that the electric vehicle **10** does not run properly along a desired route.

The sensor **116** serves to detect a magnetic field generated by magnets (magnetic nails **24**) embedded along a route. The sensor **116** generates an output signal the instant the electric vehicle **10** passes over a magnetic nail **24**. Inasmuch as the magnetic nails **24** are displaced a certain distance to the right or left from the induction cables **22**, as shown in FIG. **2**, the sensor **116** is also displaced laterally from the longitudinal central axis of the electric vehicle **10**, as shown in FIG. **10**.

The induction cables **22** only have a function to detect when the electric vehicle **10** is laterally displaced off the route. However, the magnetic nails **24** have a function to accurately detect a position of the electric vehicle **10** in its direction of travel, e.g., a position where the electric vehicle **10** stops. The magnetic nails **24** are also used in an auxiliary manner in the case where a route defined by an induction cable **22** is abruptly curved.

Since the sensors **112**, **114**, **116** serve to detect a magnetic field, they should preferably be installed on the electric vehicle **10** in positions away from magnetic bodies in order to avoid magnetic disturbance. For example, it is preferable to employ attachment members of synthetic resin for attaching the sensors **112**, **114**, **116** in position. Moreover, because the electric vehicle **10** suffers different radii of curvature of paths traced by outer wheels when it makes a turn, the sensors **112**, **114**, **116** are positioned along the axle of the rear wheels, rather than the steerable wheels (front wheels), and the electric vehicle **10** is controlled with the axle of the rear wheels as a target for the route, for thereby increasing the accuracy with which the electric vehicle **10** is to follow a desired trajectory when automatically driven.

The electric vehicle **10** has a receiving coupler **118** for charging the battery **102** with the battery charging apparatus **26**, and a charging lid opening and closing device **122** for opening and closing a charging lid **120** which covers the receiving coupler **118**. As sown in FIG. **11**, the receiving coupler **118** comprises a receiving coil **126** wound around a core **124** and connected to the battery **102** through a rectifier **127** and a contactor **129** (see FIG. **10**). The core **124** has reflectors **132**, **133** for reflecting a light signal from the light-emitting and -detecting elements **96** on the core **74** of the feeding coupler **40**, and light-emitting and -detecting elements **134** for sending a light signal to and receiving a light signal from the light-emitting and -detecting elements **98**.

The charging lid opening and closing device **122** is constructed as shown in FIGS. **12** and **13**. The charging lid opening and closing device **122** has a casing **123** surrounding its components, and a rotatable shaft **125** having opposite ends projecting out of the casing **123**. Stays **131**, **135** connected to the charging lid **120** by brackets **128**, **130** are joined to the respective opposite ends of the rotatable shaft **125**.

The casing **123** houses therein an electric motor **138** which rotates a drive shaft **136** based on a command signal for opening and closing the charging lid **120** which is supplied from the vehicle control ECU **100**. A worm **140** mounted on the drive shaft **136** is held in mesh with a worm wheel **142** to which there is coupled a gear train **144** as a speed reducer comprising a plurality of intermeshing gears having different diameters. The gear train **144** has a final gear **146** held in mesh with outer gear teeth of a base plate **148**.

The rotatable shaft **125** connected to the charging lid **120** is rotatably inserted centrally through the base plate **148**. The base plate **148** has a plurality of grooves **150** defined in one surface thereof around the central axis of the base plate **148**, with balls **152** engaging in the respective grooves **150**. A slide collar **154** is fitted over the rotatable shaft **125** in axially confronting relation to the base plate **148**. The slide collar **154** engages an engagement surface **156** of the rotatable shaft **125** and is displaceable in the axial direction of the rotatable shaft **125**. A collar **157** is fixedly mounted on the rotatable shaft **125** in axially spaced relation to the slide collar **154**. A helical spring **159** is disposed around the rotatable shaft **125** between the collar **157** and the slide collar **154** for normally biasing the slide collar **154** away from the collar **157**. The slide collar **154** has a plurality of engagement recesses **158** defined in a surface thereof facing the base plate **148**, the engagement recesses **158** being

positioned in regions corresponding to the grooves **150** and regions between the grooves **150**. The balls **152** are engageable in the engagement recesses **158**. Each of the engagement recesses **158** is of a conical shape for allowing one of the balls **152** to engage therein and disengage therefrom.

A dog **164** is fixedly mounted on the rotatable shaft **125**. A charging lid opening and closing sensor **166** is housed in and fixed to the casing **123** for detecting an angular displacement of the dog **164** caused by the rotatable shaft **125**.

The electric vehicle **10**, the battery charging apparatus **26**, and the charging lid opening and closing device **122** are basically constructed as described above. Operation of the electric vehicle **10**, the battery charging apparatus **26**, and the charging lid opening and closing device **122** will be described below.

First, a process for renting an electric vehicle **10** in the electric vehicle sharing system will briefly be described below with reference to FIGS. **1** and **2**.

A user checks ID information based on an IC card, for example, with the port terminal control unit **20** at the platform **18** of any arbitrary port **13**, and selects an electric vehicle **10**. The selected electric vehicle **10** is automatically driven to the platform **18** by being guided by the induction cable **22** and the magnetic nails **24** in the parking area **19**.

As shown in FIG. **10**, the electric vehicle **10** has the sensors **112**, **114** that are symmetrically positioned along the rear wheel axle. The vehicle control ECU **100** controls the steering controller **110** in order to equalize the intensities, detected by the sensors **112**, **114**, of a magnetic field that is generated by a current flowing through the induction cable **22**, for thereby guiding the electric vehicle **10** along the induction cable **22** to the platform **18**. Based on the intensities of magnetic fields generated by the magnetic nails **24** detected by the sensor **116**, the vehicle control ECU **100** detects the position of the electric vehicle **10** in the direction of travel. When the electric vehicle **10** arrives at the platform **18**, the vehicle control ECU **100** controls the brake controller **108** to stop the electric vehicle **10**.

When the electric vehicle **10** arrives at the platform **18**, the automatic driving mode of the electric vehicle **10** is canceled. Thereafter, the user gets on the electric vehicle **10** and manually drives the electric vehicle **10** to a destination.

A process for returning the electric vehicle **10** and putting the electric vehicle **10** on standby in a parking area **19** will be described below with reference to FIG. **14**.

The user gets off the electric vehicle **10** at the platform **18** of any arbitrary port **13**, and then operates the port terminal control unit **20** to return the electric vehicle **10** in step S**1**. When the returning procedure is completed by the user, the electric vehicle **10** is automatically driven to a position (charging port) where the battery charging apparatus **26** is located in the parking area **19** in step S**2**. At this time, the electric vehicle **10** is controlled using the induction cable **22** and the magnetic nails **24** in the parking area **19**, in the same manner as when the electric vehicle **10** is rented.

As shown FIG. **3**, the charging port has the battery charging apparatus **26** and the tire tread force sensor **44** for detecting the position of the electric vehicle **10**. The tire tread force sensor **44** detects whether the receiving coupler **118** of the electric vehicle **10** is positioned within predetermined ranges along the X- and Z-axes with respect to the battery charging apparatus **26**, in step S**3**.

Based on a detected signal from the battery charging apparatus **26**, the charging robot controller **99** decides whether the electric vehicle **10** is in a fitting position where the feeding coupler **40** of the battery charging apparatus **26** can be fitted in the receiving coupler **118** of the electric vehicle **10** in step S**4**. If the electric vehicle **10** is not in the fitting position, then the position where the electric vehicle **10** is stopped with respect to the charging port is adjusted in step S**5**. Thereafter, the processing in steps S**3**, S**4** is repeated.

If the electric vehicle **10** is in the fitting position in step S**4**, then the charging lid **120** of the electric vehicle **10** is automatically opened in step S**6**. A control process for opening and closing the charging lid **120** will be described below with reference to FIG. **15**.

When the vehicle control ECU **100** receives a lid opening command signal from the battery charging apparatus **26** in step S**6***a*, the vehicle control ECU **100** energizes the motor **138** of the charging lid opening and closing device **122** to rotate its drive shaft **136** in a direction to open the charging lid **120** in step S**6***b*.

Specifically, the worm **140** coupled to the drive shaft **136** is rotated to cause the gear train **144**, which serves as the speed reducer including the worm wheel **142** meshing with the worm **140**, to rotate the base plate **148**. The slide collar **154** is coaxially connected to the base plate **148** by the balls **152**. As the slide collar **154** is rotated, the rotatable shaft **125** is rotated. The charging lid **120** which is connected to the rotatable shaft **125** by the brackets **128**, **130** and the stays **131**, **135** is opened.

The vehicle control ECU **100** detects a drive current of the motor **138** in step S**6***c*. If the detected drive current is greater than a predetermined value in step S**6***d*, i.e., if the motor **138** is subjected to a load greater than a predetermined load, then the vehicle control ECU **100** determines that the charging lid **120** is fully opened, and de-energizes the motor **138** in step S**6***e*.

After the charging lid **120** is opened, the battery charging robot **30** of the battery charging apparatus **26** is actuated to bring the feeding coupler **40** into fitting engagement with the receiving coupler **118** of the electric vehicle in step S**7** (see FIG. **14**). A control process for fitting the feeding coupler **40** with the receiving coupler **118** will be described below with reference to FIG. **16**. The ultrasonic sensor **42** on the base **32** of the battery charging robot **30** detects a distance from the battery charging robot **30** to the receiving coupler **118** in step S**7***a*. Based on the detected distance to the receiving coupler **118**, the battery charging robot **30** actuates the first arm **36** and the second arm **38** to move the feeding coupler **40** along the Z-axis toward the receiving coupler **118** in step S**7***b*. Then, the battery charging robot **30** holds the feeding coupler **40** in its position along the Z-axis, and moves the feeding coupler **40** along the X- and Y-axes in step S**7***c*. The battery charging robot **30** detects reflected light beams from the reflectors **132**, **133** on the receiving coupler **138** in step S**7***d*.

Specifically, the light-emitting element **96** on the feeding coupler **40** emits a light beam toward the receiving coupler **118**, and the battery charging robot **30** detects a position where a reflected light beam from the reflector **132** on the receiving coupler **118** can be detected by the light-detecting element **96**. The battery charging robot **30** stores in memory the position of the feeding coupler **40** when the reflected light beam from the reflector **132** is detected by the light-detecting element **96** in step S**7***e*.

Similarly, the battery charging robot **30** detects a position where a reflected light beam from the reflector **133** on the receiving coupler **118** can be detected by the light-detecting element **96**. The battery charging robot **30** stores in memory

the position of the feeding coupler **40** when the reflected light beam from the reflector **133** is detected by the light-detecting element **96** in steps S7*c* through S7*f*.

From the two positions of the feeding coupler **40** where the reflected beams are detected, the battery charging robot **30** calculates the position of the receiving coupler **118** in step S7*g*. Since the receiving coupler **118** is thus positionally detected, the feeding coupler **40** can be fitted in the receiving coupler **118** with high accuracy.

Based on the position of the receiving coupler **118** calculated in step S7*g*, the battery charging robot **30** displaces the feeding coupler **40** along the X- and Y-axes to correct the position of the feeding coupler **40** in step S7*h*. Thereafter, the battery charging robot **30** actuates the first arm **36** and the second arm **38** to move the feeding coupler **40** toward the receiving coupler **118** of the electric vehicle **10** in step S7*i*.

The battery charging apparatus **26** monitors whether there is a reflected light beam from the reflector **132** of the receiving coupler **118** or not at all times in step S7*j*. The battery charging robot **30** continuously moves the feeding coupler **40** until there is a reflected light beam from the reflector **132** and the feeding coupler **40** is brought into fitting engagement with the receiving coupler **118** in step S7*k*.

The feeding coupler **40** is fitted into the receiving coupler **118** as follows:

In FIG. **5**, when the feeding coupler **40** is moved toward the receiving coupler **118** and the tip end of the feeding coupler **40** near the core **74** is pressed by the tip end of the receiving coupler **118** near the core **124**, the coupler body **72** of the feeding coupler **40** is displaced together with the shaft **54** toward the first bracket **46**. The stop ring **78** in the coupler body **72** is disengaged from the skirt **56**, and the stop pin **60** is brought out of the hole **62** and hence is disengaged from the first bracket **46**. As a result, the coupler body **72** becomes angularly movable about the ball **64** on the shaft **54**, and is slightly displaceable along the X-axis in the longitudinal direction of the electric vehicle **10**.

Consequently, even if there is a small positional misalignment between the feeding coupler **40** and the receiving coupler **118** when the feeding coupler **40** is pressed by the receiving coupler **118**, the feeding coupler **40** can be smoothly guided into the receiving coupler **118** (see FIGS. **6** and **7**). Since the feeding coupler **40** is fixed in position until it is fitted into the receiving coupler **118**, the feeding coupler **40** is prevented from swinging while it is being moved toward the receiving coupler **118**. Thus, the feeding coupler **40** is prevented from taking an inappropriate attitude immediately before it engages the receiving coupler **118**, and hence can well be fitted into the receiving coupler **118**.

After the feeding coupler **40** is fitted into the receiving coupler **118**, when the feeding coupler **40** is further displaced toward the receiving coupler **118**, the end of the shaft **54** engages the limit switch **63**, which detects the full fitting engagement of the feeding coupler **40** with the receiving coupler **118**.

Upon detection of the full fitting engagement of the feeding coupler **40** with the receiving coupler **118**, the battery charging apparatus **26** stops the movement of the feeding coupler **40** in step S7*m*. The fitting engagement of the feeding coupler **40** with the receiving coupler **118** is now completed.

If a reflected light beam from the reflector **132** is not detected in step S7*j*, then the battery charging apparatus **26** determines that an unexpected situation has occurred, e.g., a foreign object has entered between the feeding coupler **40** and the receiving coupler **118**, blocking the reflected light beam, or the charging lid **120** is accidentally closed. The battery charging apparatus **26** returns the feeding coupler **40** to its origin, i.e., the standby position, and stops moving the feeding coupler **40** in step S7*n*.

If a reflected light beam from the reflector **132** is not detected, then the battery charging apparatus **26** may not return the feeding coupler **40** to its origin and stop moving the feeding coupler **40**. Rather, the battery charging apparatus **26** may stop moving the feeding coupler **40** and then start coupling the feeding coupler **40** to the receiving coupler **118** again, or may return the feeding coupler **40** to its origin and then start coupling the feeding coupler **40** to the receiving coupler **118** again.

If the feeding coupler **40** is properly fitted into the receiving coupler **118**, then a battery charging process is carried out by the battery charging robot in step S8 (FIG. **14**). The battery charging process will be described below with reference to FIG. **17**.

The vehicle control ECU **100** checks a charged state of the battery **102**. If the vehicle control ECU **100** determines that the battery **102** needs to be charged, then the vehicle control ECU **100** sends a charging command signal from the light-emitting element **134** on the receiving coupler **118** to the light-emitting element **98** on the feeding coupler **40** in step S8*a*. In response to the charging command signal, the battery charging apparatus **26** supplies a current to the feeding coil **76** of the feeding coupler **40**. The current supplied to the feeding coil **76** generates a magnetic field which generates a current in the receiving coil **126** of the receiving coupler **118**. The generated current is rectified by the rectifier **127** into a direct current, which is supplied via the contactor **129** made conductive by the vehicle control ECU **100** to the battery **102** for thereby charging the battery **102** in step S8*b*.

Inasmuch as the feeding coupler **40** is slightly displaceable along the X-axis with respect to the receiving coupler **118** and is also angularly movable, the feeding coupler **40** does not damage the receiving coupler **118** even if the electric vehicle **10** is positionally displaced while the battery **102** is being charged. Accordingly, the battery **102** can continuously be charged under good conditions.

The vehicle control ECU **100** checks the charged state of the battery **102** at all times. If the vehicle control ECU **100** determines that the battery **102** is fully charged, the vehicle control ECU **100** sends a charging completion signal via the light-emitting element **134** to the battery charging apparatus **26**, and turns off the contactor **129** in step S8*c*. In response to the charging completion signal, the battery charging apparatus **26** stops supplying the current to the feeding coil **76**, and the charging of the battery **102** is completed in step S8*d*.

After the charging of the battery **102** is completed, the battery charging robot **30** releases the feeding coupler **40** from the receiving coupler **118** in step S9 (see FIG. **14**). A process for releasing the feeding coupler **40** from the receiving coupler **118** will be described below with reference to FIG. **18**.

The battery charging apparatus **26** detects the position of the feeding coupler **40** along the X- and Y-axes based on signals from sensors (not shown) attached to the robot body **34**, the first arm **36**, and the second arm **38** of the battery charging robot **30** in step S9*a*. While keeping the detected position of the feeding coupler **40** along the X- and Y-axes, the battery charging apparatus **26** actuates the first arm **36** and the second arm **38** to move the feeding coupler **40** along the Z-axis in step S9*b*. In this manner, the feeding coupler

40 can be released from the receiving coupler 118 without causing damage to the receiving coupler 118. When the feeding coupler 40 is spaced from the receiving coupler 118, the stop ring 78 engages the skirt 56 of the sleeve 53 under the bias of the spring 68, and is fixed in position again. After the feeding coupler 40 is detected as being spaced a predetermined distance from the receiving coupler 118 in step S9*c*, the battery charging apparatus 26 moves the robot body 34, the first arm 36, and the second arm 38 to origins along the X-, Y-, and Z-axes for thereby returning the battery charging robot 30 to its origin in step S9*d*.

Thereafter, a process for closing the charging lid 120 is carried out in step S10 (see FIG. 14). The process for closing the charging lid 120 will be described below with reference to FIG. 15.

If the feeding coupler 40 is sufficiently spaced from the electric vehicle 10 and the vehicle control ECU 100 supplies a lid closing command signal for opening the charging lid 120 in step S10*a*, then the vehicle control ECU 100 energizes the motor 138 of the charging lid opening and closing device 122 to rotate its drive shaft 136 in a direction to close the charging lid 120 in step S10*b*.

Specifically, the worm 140 coupled to the drive shaft 136 is rotated to cause the gear train 144 to rotate the base plate 148. The rotation of the base plate 148 causes the balls 152 to rotate the slide collar 154, thus rotating the rotatable shaft 125. The charging lid 120 is now closed.

The vehicle control ECU 100 detects a drive current of the motor 138 in step S10*c*. If the detected drive current is greater than a predetermined value in step S10*d*, then the vehicle control ECU 100 determines that the charging lid 120 is fully closed, and de-energizes the motor 138 in step S10*e*.

The charging lid 120 which is open can manually be closed forcibly. Specifically, when the user, for example, of the electric vehicle 10 displaces the charging lid 120 in a direction to close the same, applying a force greater than a given level to the rotatable shaft 125, the slide collar 154 is displaced along the rotatable shaft 125 against the bias of the spring 159, whereupon the balls 152 are released from the engagement recesses 158. Therefore, whereas the base plate 148 is held against rotation, the rotatable shaft 125 and the slide collar 154 are rotated thereby to displace the charging lid 120 in the closing direction.

When the charging lid 120 is angularly moved a certain angle in the closing direction, the dog 164 rotating with the rotatable shaft 125 is detected by the charging lid opening and closing sensor 166, which enables the vehicle control ECU 100 to recognize that the charging lid 120 is being closed in step S10*f*. The vehicle control ECU 100 now energizes the motor 138 to rotate its drive shaft 136 in the direction to close the charging lid 120 in step S10*b*. When the base plate 148 is angularly moved a certain angle, the balls 152 engage back into the engagement recesses 158, thus coupling the base plate 148 and the slide collar 154 to each other. Therefore, the charging lid 120 is forcibly displaced in the closing direction by the motor 138.

The vehicle control ECU 100 detects a drive current of the motor 138 in step S10*c*. If the detected drive current is greater than a predetermined value in step S10*d*, then the vehicle control ECU 100 determines that the charging lid 120 is fully closed, and de-energizes the motor 138 in step S10*e*.

The electric vehicle 10 with the charging lid 120 closed is then moved to a rental standby position in the parking area 19 in step S11.

Although a certain preferred embodiment of the present invention has been shown and described in detail, it should be understood that various changes and modifications may be made therein without departing from the scope of the appended claims.

What is claimed is:

1. A battery charging apparatus for supplying electric energy to the battery of a battery-powered electric vehicle through a receiving coupler mounted on the electric vehicle, comprising:

a feeding coupler for being brought into fitting engagement with the receiving coupler;

a displacing mechanism for displacing said feeding coupler toward said receiving coupler;

a fixing mechanism for fixing said feeding coupler to said displacing mechanism, and releasing said feeding coupler from said displacing mechanism when said feeding coupler is pressed against said receiving coupler; and

a support mechanism for supporting said feeding coupler displaceably with respect to said displacing mechanism when said feeding coupler is released from said displacing mechanism.

2. A battery charging apparatus according to claim 1, wherein said fixing mechanism comprises:

first engaging means for engaging said feeding coupler with said displacing mechanism for preventing said feeding coupler from being displaced along the electric vehicle; and

second engaging means for engaging said feeding coupler with said displacing mechanism for preventing said feeding coupler from being angularly moved with respect to said displacing mechanism;

the arrangement being such that when said feeding coupler is pressed by said receiving coupler, said first engaging means and said second engaging means disengage said feeding coupler from said displacing mechanism.

3. A battery charging apparatus according to claim 2, further comprising a resilient member for biasing said feeding coupler to project toward the electric vehicle, said first engaging means comprising a pin for disengaging said feeding coupler from said displacing mechanism upon displacement of said feeding coupler in response to compression of said resilient member when said feeding coupler is pressed by said receiving coupler.

4. A battery charging apparatus according to claim 2, further comprising a resilient member for biasing said feeding coupler to project toward the electric vehicle, said second engaging means comprising a stop ring for disengaging said feeding coupler from said displacing mechanism upon displacement of said feeding coupler in response to compression of said resilient member when said feeding coupler is pressed by said receiving coupler.

5. A battery charging apparatus according to claim 1, wherein said support mechanism comprises a ball joint by which said feeding coupler is supported angularly movably with respect to said displacing mechanism, and a plurality of resilient members for supporting said feeding coupler in a constant attitude with respect to said displacing mechanism.

6. A battery charging apparatus according to claim 1, wherein said displacing mechanism comprises detecting means for detecting when said feeding coupler is displaced toward said displacing mechanism, and means for detecting when said feeding coupler is brought into fitting engagement with the receiving coupler based on a detected signal from said detecting means.

* * * * *