US007693609B2

(12) **United States Patent**
Kressner et al.

(10) **Patent No.: US 7,693,609 B2**
(45) **Date of Patent: Apr. 6, 2010**

(54) **HYBRID VEHICLE RECHARGING SYSTEM AND METHOD OF OPERATION**

(75) Inventors: **A. Arthur Kressner**, Westfield, NJ (US); **Christopher C. Hoyes**, West New York, NJ (US); **Anthony F. Barna**, North Massapequa, NY (US)

(73) Assignee: **Consolidated Edison Company of New York, Inc.** NY (US)

(*) Notice: Subject to any disclaimer, the term of this patent is extended or adjusted under 35 U.S.C. 154(b) by 286 days.

(21) Appl. No.: **11/850,113**

(22) Filed: **Sep. 5, 2007**

(65) **Prior Publication Data**

US 2009/0062967 A1 Mar. 5, 2009

(51) **Int. Cl.**

G05D 3/12	(2006.01)
G05D 17/00	(2006.01)
G05B 11/01	(2006.01)
G01R 31/36	(2006.01)
H02J 7/00	(2006.01)

(52) **U.S. Cl.** **700/291**; 700/22; 700/286; 700/295; 700/297; 702/63; 320/109; 903/903; 903/907

(58) **Field of Classification Search** 700/22, 700/286–288, 291, 295, 297; 320/101, 109; 702/60, 62, 63; 429/12, 22, 23; 701/22; 903/902, 903, 907, 908

See application file for complete search history.

(56) **References Cited**

U.S. PATENT DOCUMENTS

5,297,664	A	3/1994	Tseng et al.	
5,819,234	A	10/1998	Slavin et al.	
6,081,205	A *	6/2000	Williams	340/932.2
6,771,044	B1	8/2004	Vinciguerra et al.	
6,945,453	B1	9/2005	Schwarz, Jr.	
7,013,205	B1	3/2006	Hafner et al.	
7,402,978	B2 *	7/2008	Pryor	320/104

(Continued)

OTHER PUBLICATIONS

Tsutomu Oi, "Feasibility Study . . . in Japan", Publication Date: Jun. 2, 2003.*

A.H. Fanney, "The Thermal . . . Off-Peak Schedules", Publication Date: May 1996.*

P. Denholm & W. Short, "An Evaluation of Utility System Impacts and Benefits of Optimally Dispatched Plug-In Hybrid Electric Vehicles", technical report, Oct. 2006, 30 pages, National Renewable Energy Laboratory, U.S. Department of Energy Office of Energy Efficiency & Renewable Energy, Golden, CO, US.

(Continued)

Primary Examiner—Sean P Shechtman
(74) *Attorney, Agent, or Firm*—Cantor Colburn LLP

(57) **ABSTRACT**

A system and method for recharging a plug-in hybrid vehicle. The system includes a controller that schedules the recharging of the vehicles on local electrical distribution networks. The system arranges the schedule to minimize the demand loading on the local distribution network to more efficiently operate power plants providing electrical power to the distribution networks. A system for collecting charges associated with the recharging of plug-in hybrid vehicles is also disclosed providing for prepaid utility accounts.

4 Claims, 13 Drawing Sheets

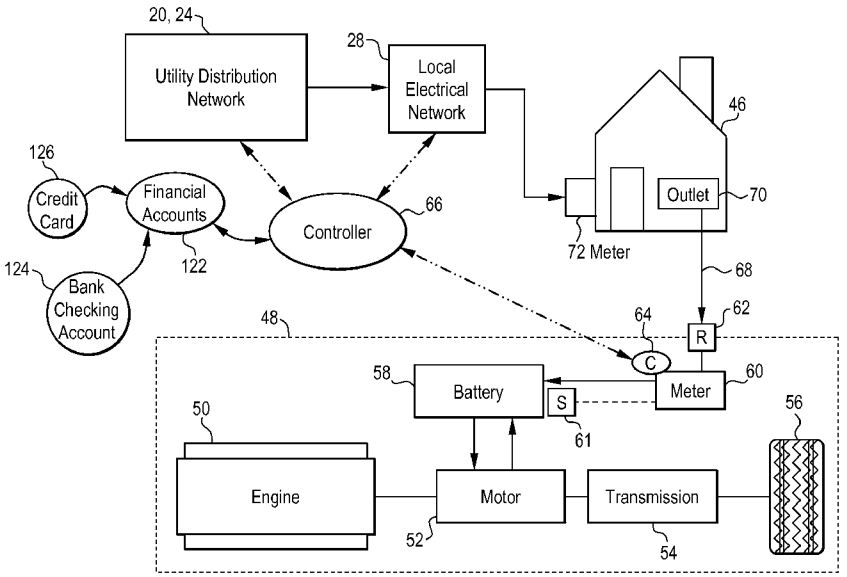

U.S. PATENT DOCUMENTS

2003/0221883	A1	12/2003	Kubodera et al.	
2006/0052918	A1	3/2006	McLeod et al.	
2008/0040295	A1 *	2/2008	Kaplan et al.	705/412

OTHER PUBLICATIONS

W. Kempton et al., "Vehicle-to-Grid Power: Battery, Hybrid, and Fuel Cell Vehicles as Resources for Distributed Electric Power in California", Report prepared for the California Air Resources Board and the California Environmental Protection Agency and the Los Angeles Department of Water and Power, Electric Transportation Program, Jun. 2001, http://www.udel.edu/V2G/docs/V2G-Cal-2001.pdf, retrieved Nov. 13, 2008, 94 pages.

W. Kempton et al., "Vehicle-to-grid power fundamentals: Calculating capacity and net revenue", Journal of Power Sources, University of Delaware, Dec. 8, 2004, http://www.udel.edu/V2G/KempTom-V2G-Fundamentals05.PDF, retrieved Nov. 13, 2008, 12 pages.

International Search Report, International Application No. PCT/US 08/74399, mailed Oct. 31, 2008, 10 pages.

Fanney et al., "The Thermal Performance of Residential Electric Water Heaters Subjected to Various Off-Peak Schedules," Journal of Solar Energy Engineering, vol. 118, pp. 73-80, May 1996, 8 pages.

Oi et al., "Feasibility study on hydrogen refueling infrastructure for fuel cell vehicles using the off-peak power in Japan," International Journal of Hydrogen Energy 29 (2004) 347-354, Institute of Hydrogen Energy, Jun. 2, 2003, 8 pages.

* cited by examiner

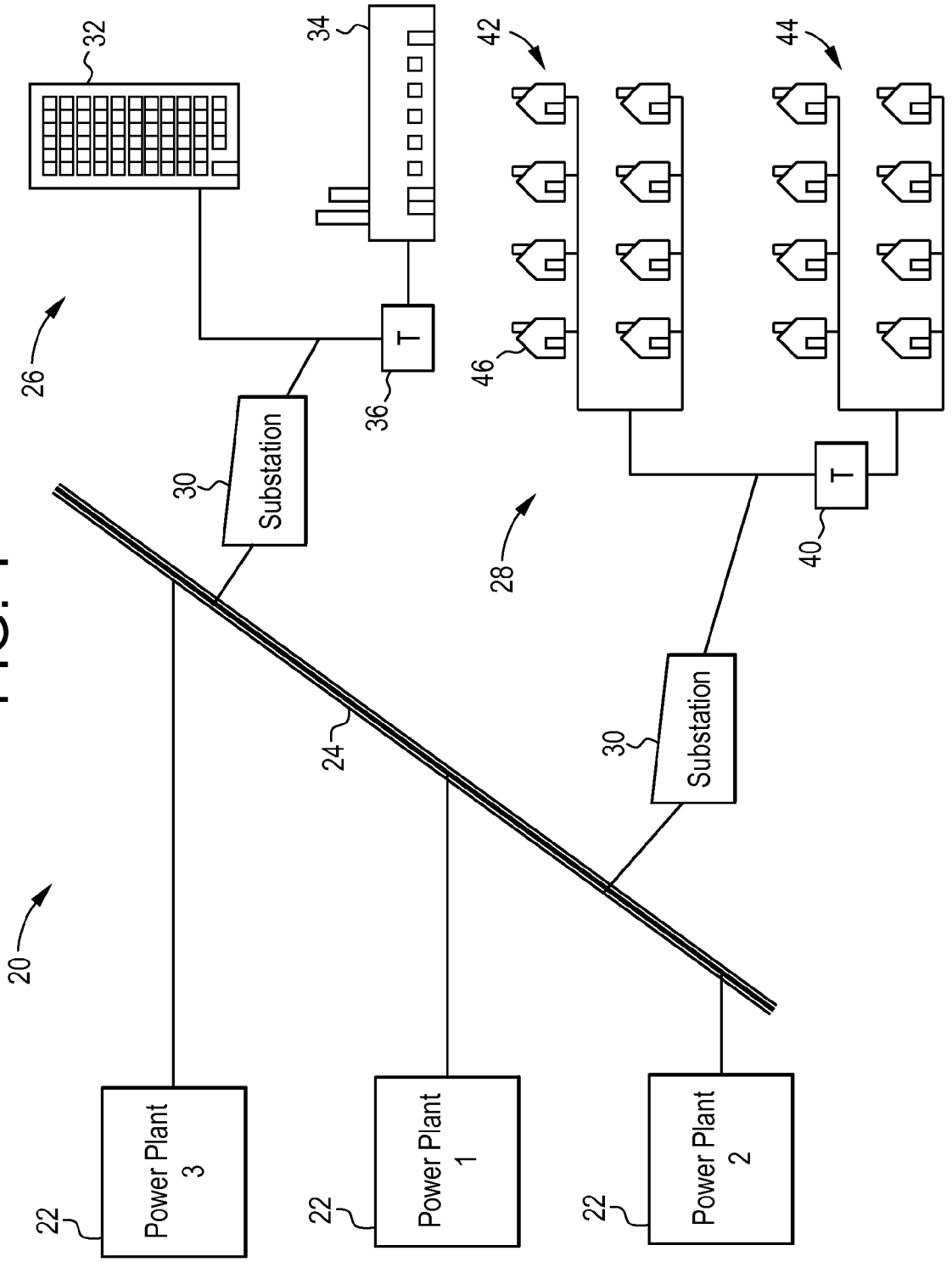
20
22
Power Plant 3
22
Power Plant 1
22
Power Plant 2
24
26
28
30
Substation
30
Substation
32
34
36
T
40
T
42
44
46

FIG. 1

FIG. 2

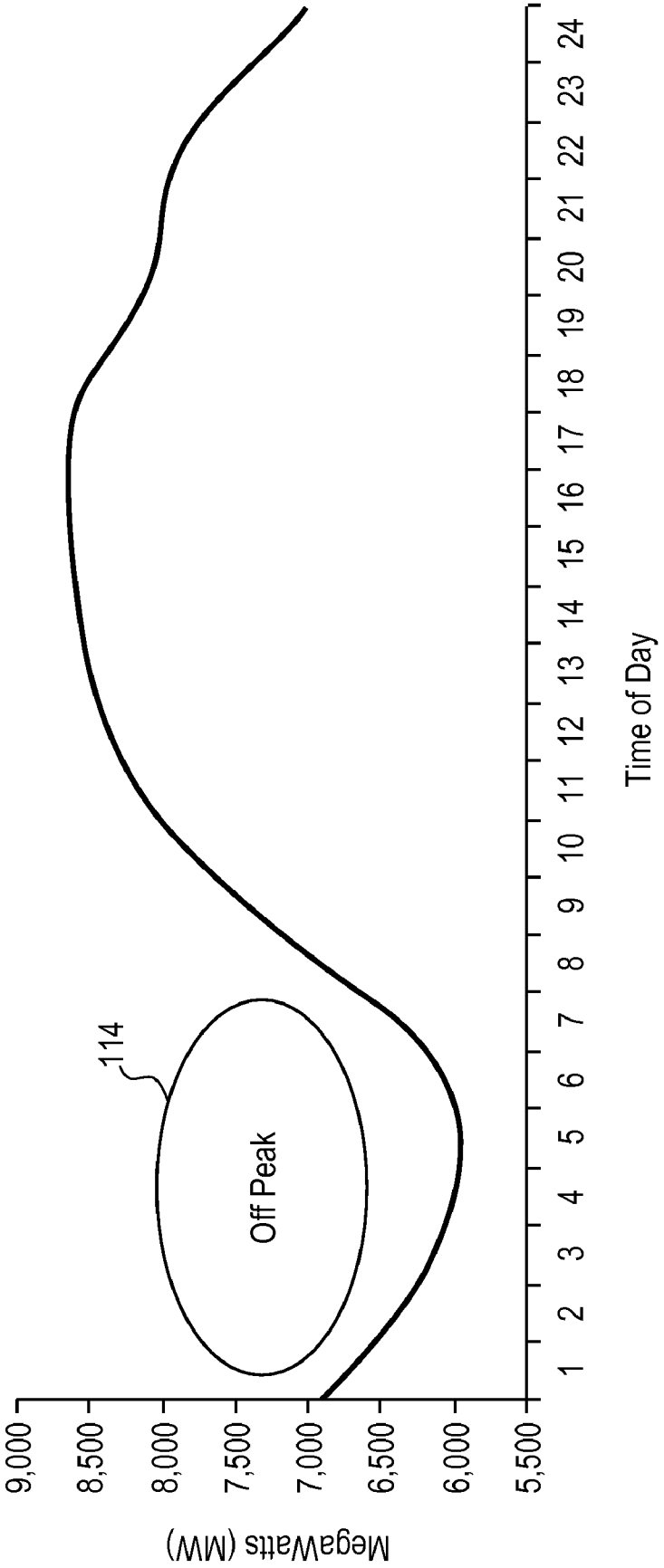
114
Off Peak
9,000
8,500
8,000
7,500
7,000
6,500
6,000
5,500
MegaWatts (MW)
1 2 3 4 5 6 7 8 9 10 11 12 13 14 15 16 17 18 19 20 21 22 23 24
Time of Day

FIG. 3

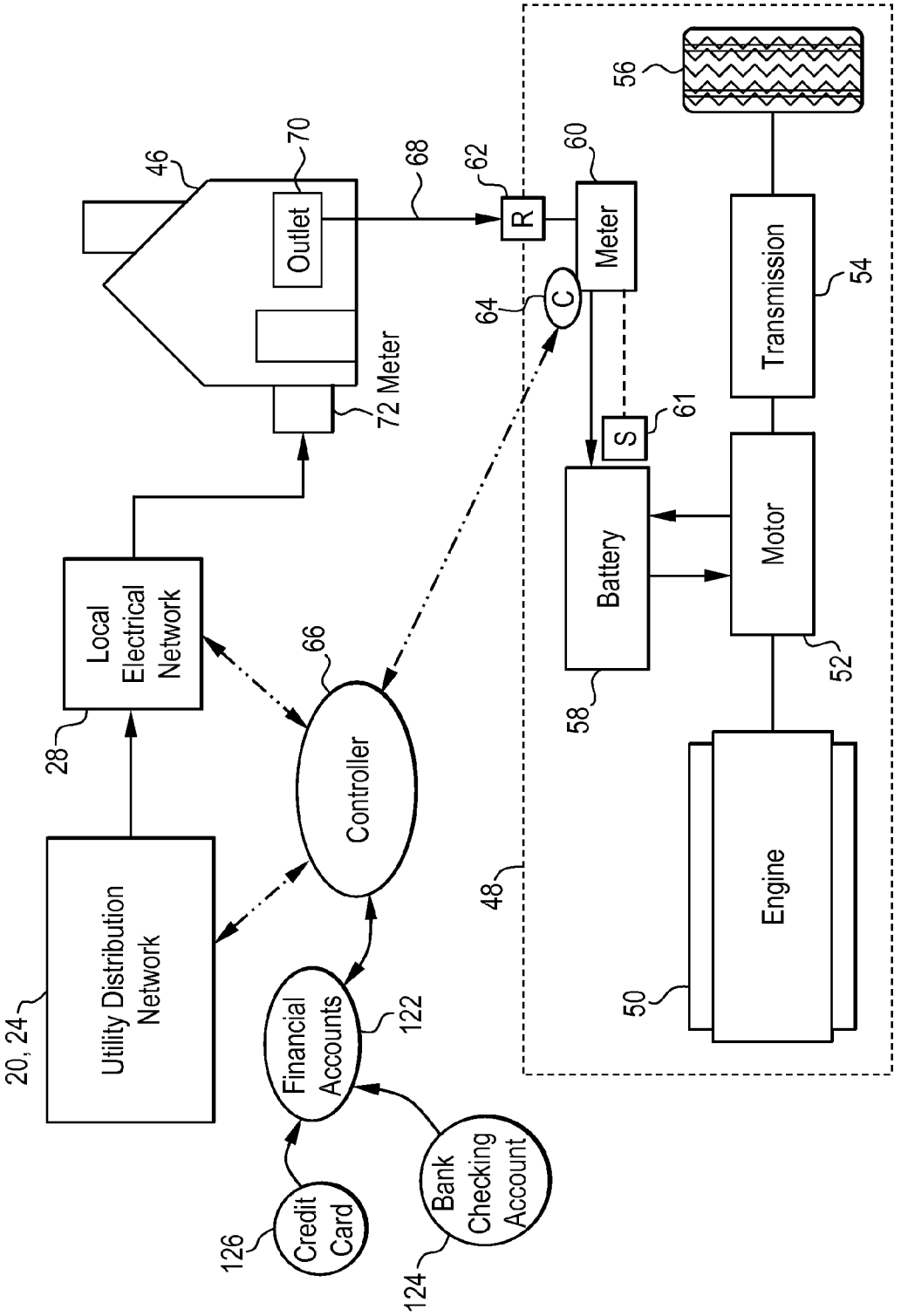
Utility Distribution Network
20, 24
Local Electrical Network
28
Outlet
46
70
72 Meter
68
R
62
C
64
Meter
60
S
61
Battery
58
Controller
66
Financial Accounts
122
Credit Card
126
Bank Checking Account
124
Transmission
54
Motor
52
Engine
50
48
56

FIG. 4

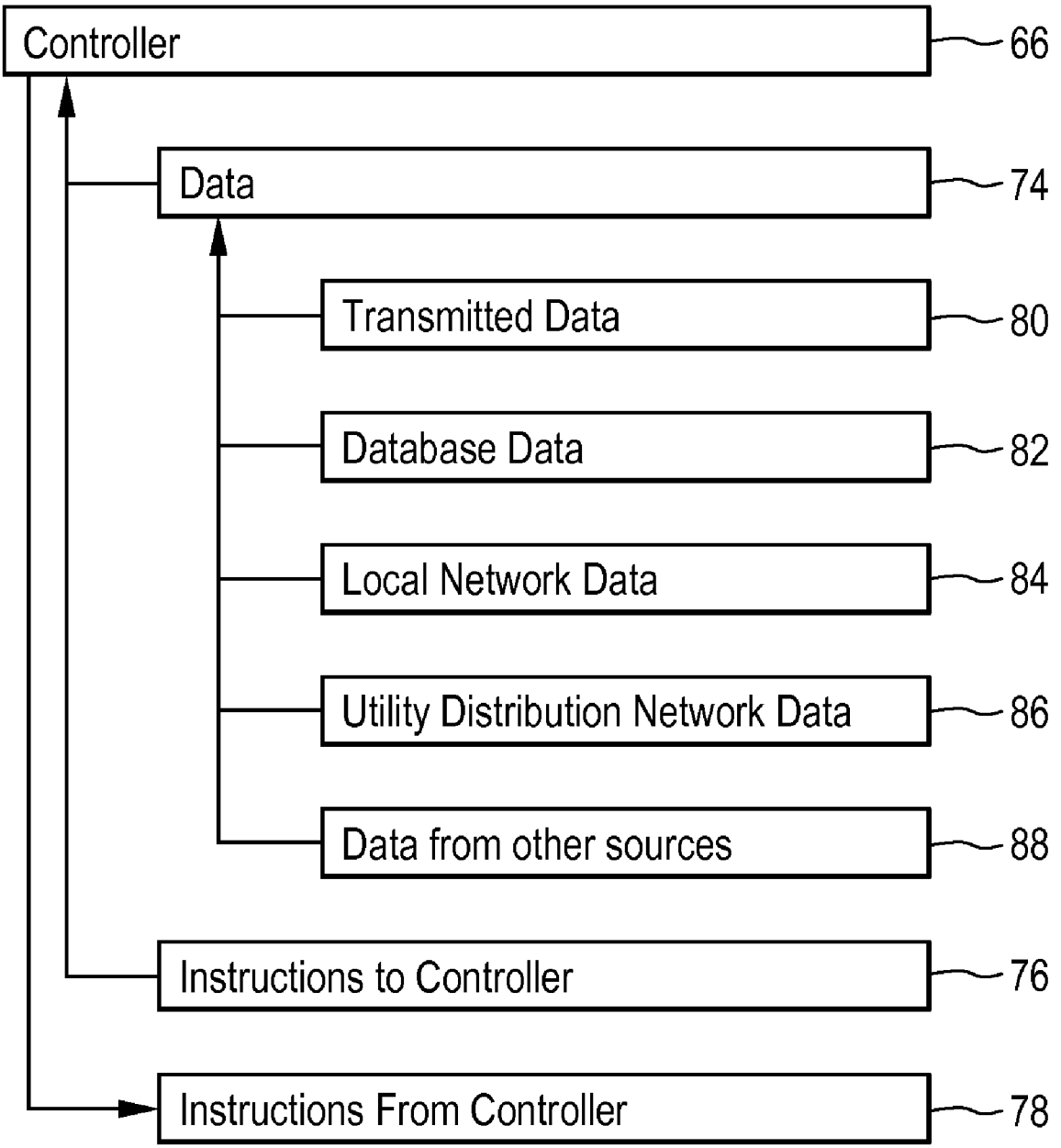
Controller
66
Data
74
Transmitted Data
80
Database Data
82
Local Network Data
84
Utility Distribution Network Data
86
Data from other sources
88
Instructions to Controller
76
Instructions From Controller
78

FIG. 5

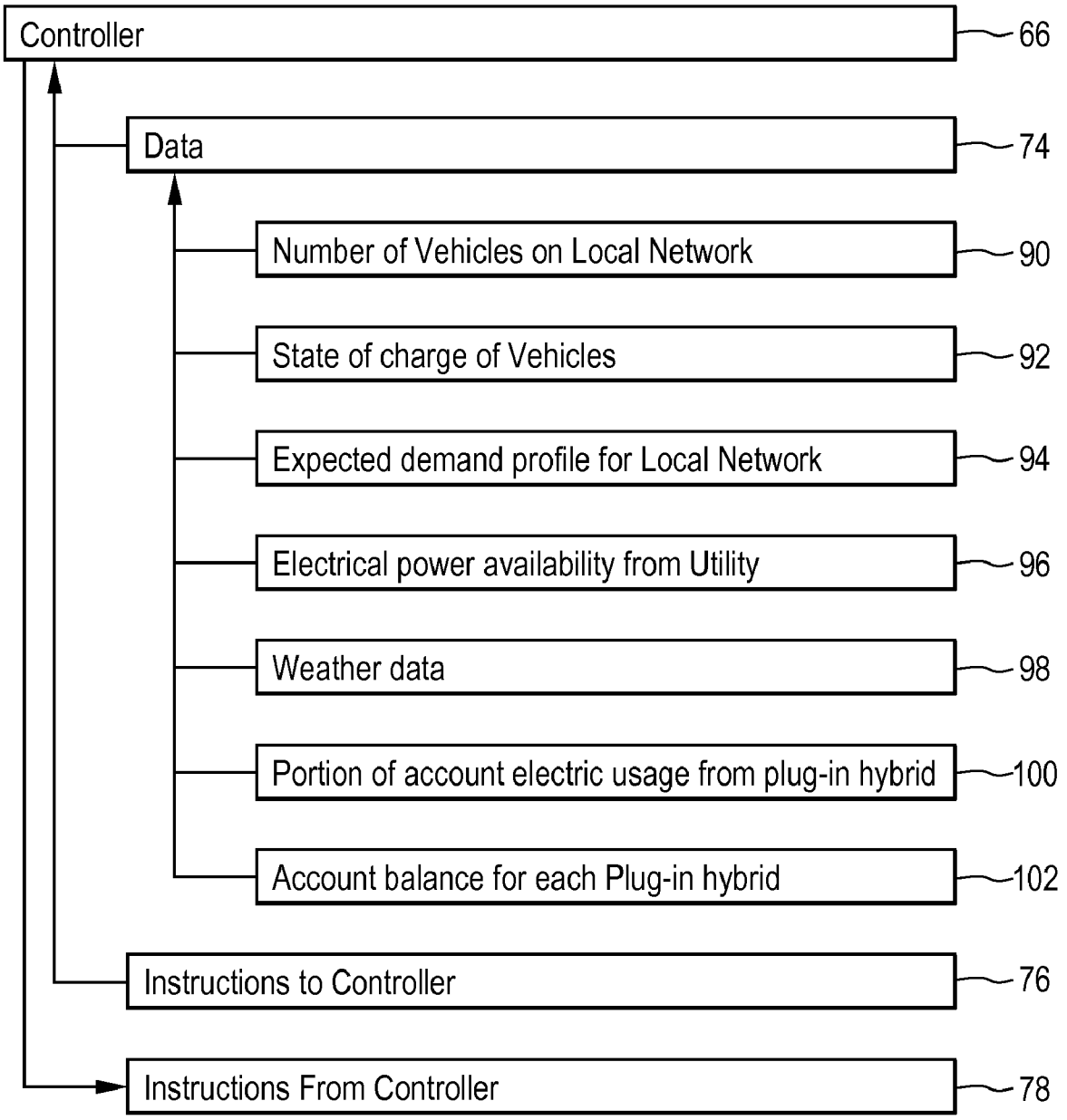
Controller
66
Data
74
Number of Vehicles on Local Network
90
State of charge of Vehicles
92
Expected demand profile for Local Network
94
Electrical power availability from Utility
96
Weather data
98
Portion of account electric usage from plug-in hybrid
100
Account balance for each Plug-in hybrid
102
Instructions to Controller
76
Instructions From Controller
78

FIG. 6

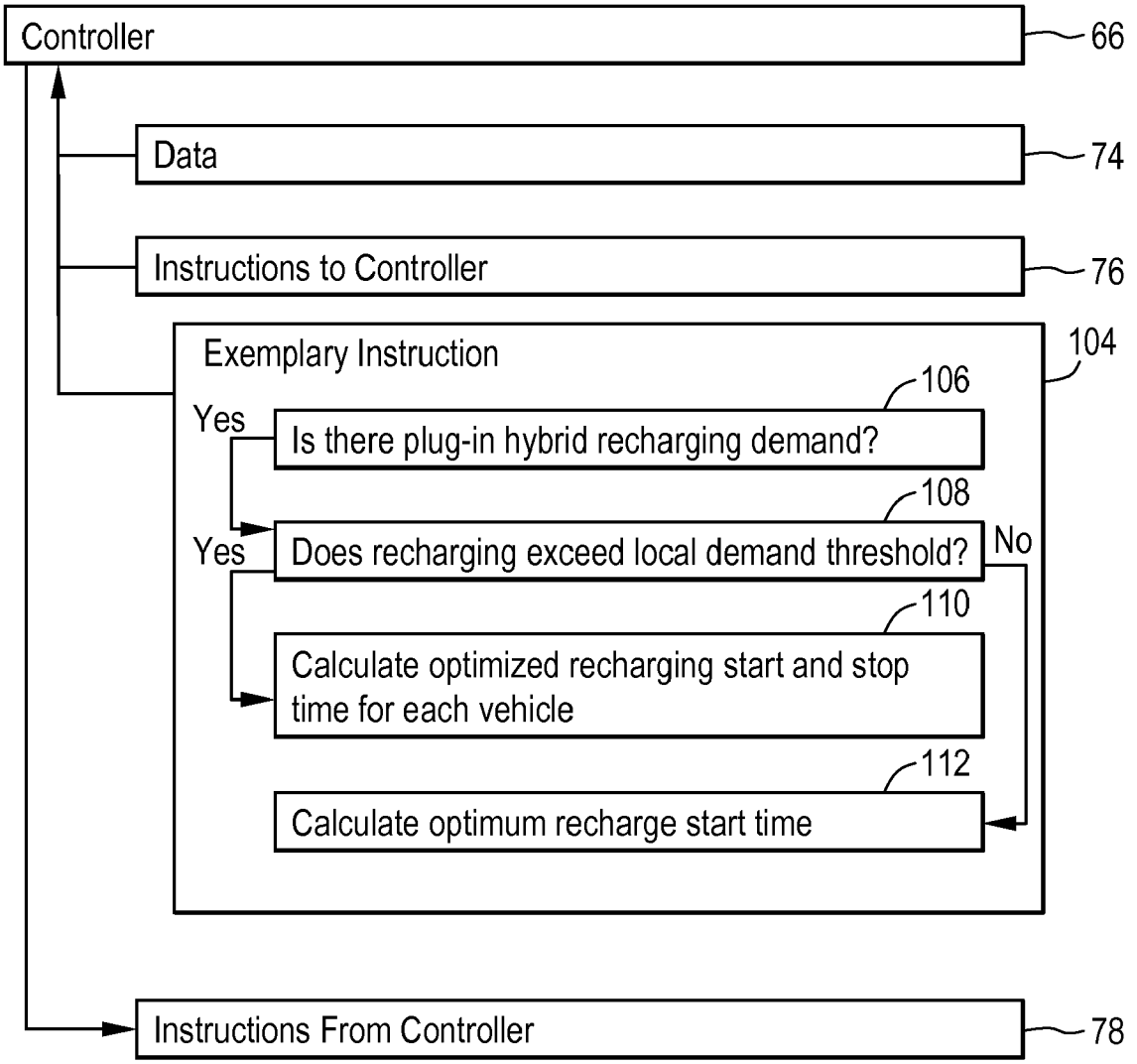
Controller
66
Data
74
Instructions to Controller
76
Exemplary Instruction
104
106
Yes
Is there plug-in hybrid recharging demand?
108
Yes
Does recharging exceed local demand threshold?
No
110
Calculate optimized recharging start and stop time for each vehicle
112
Calculate optimum recharge start time
Instructions From Controller
78

FIG. 7

PIHV Recharging Schedule

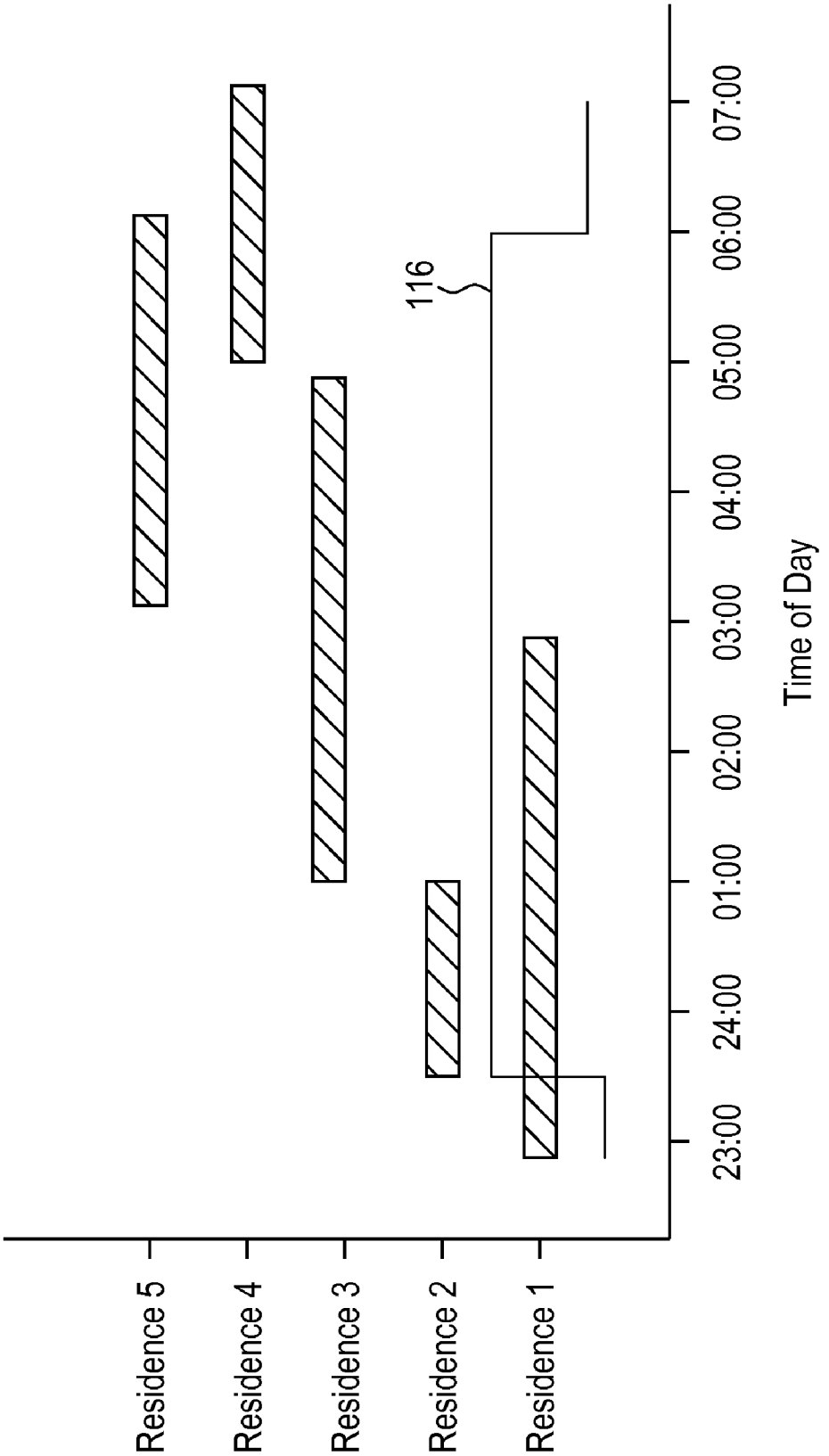

FIG. 8

PIHV Recharging Schedule

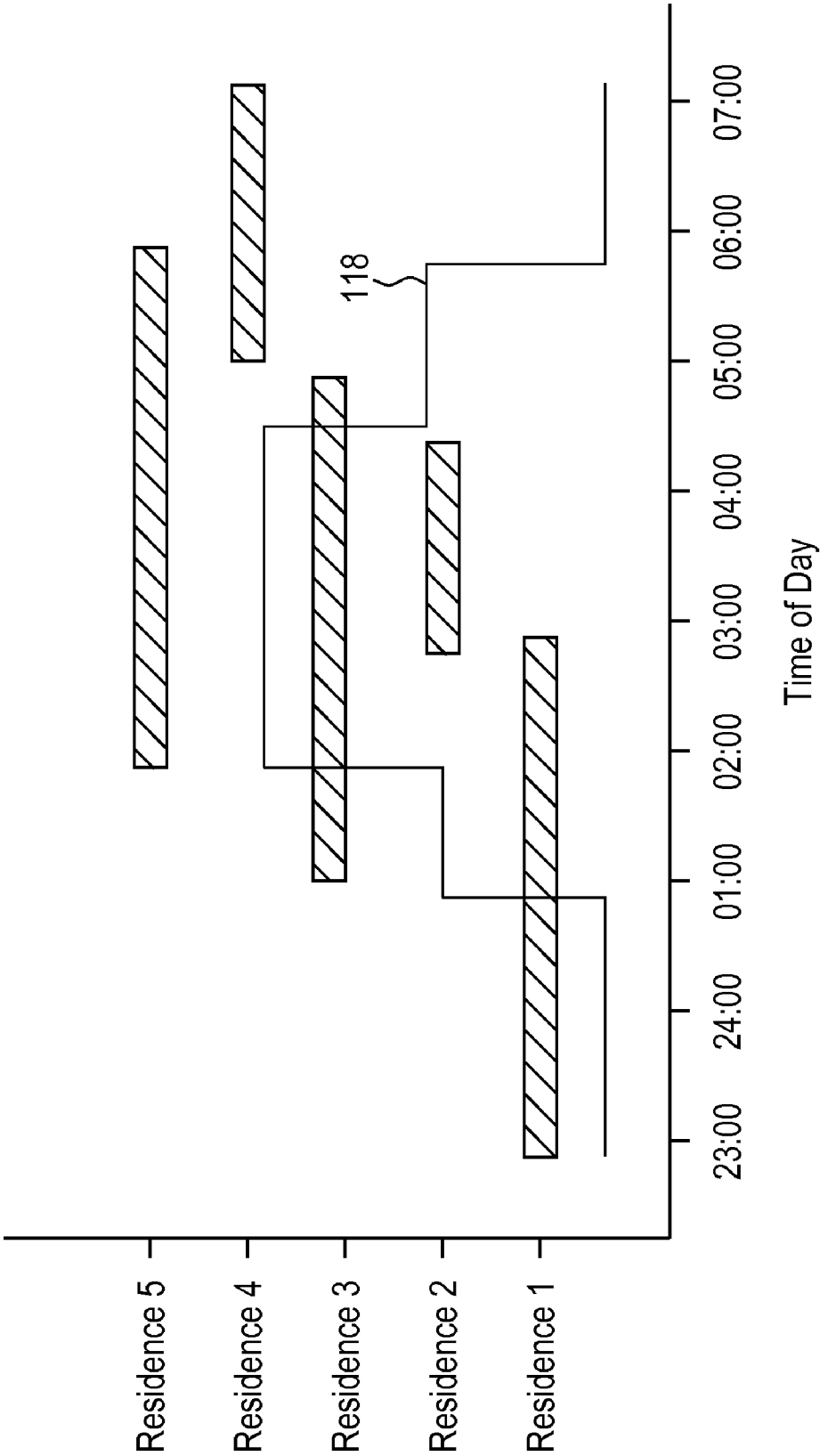

FIG. 9

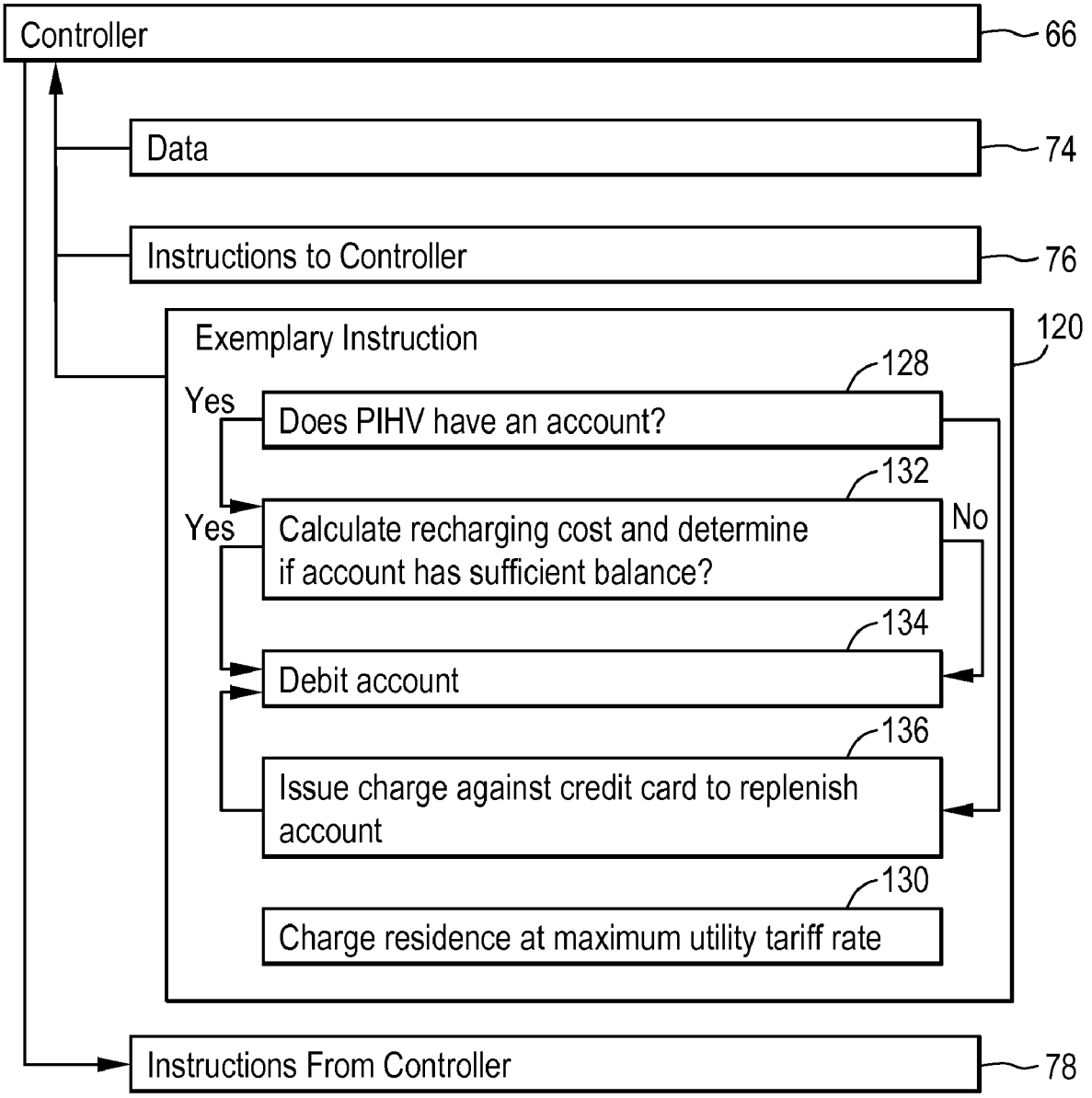
Controller
66
Data
74
Instructions to Controller
76
Exemplary Instruction
120
128
Yes
Does PIHV have an account?
132
Yes
Calculate recharging cost and determine if account has sufficient balance?
No
134
Debit account
136
Issue charge against credit card to replenish account
130
Charge residence at maximum utility tariff rate
Instructions From Controller
78

FIG. 10

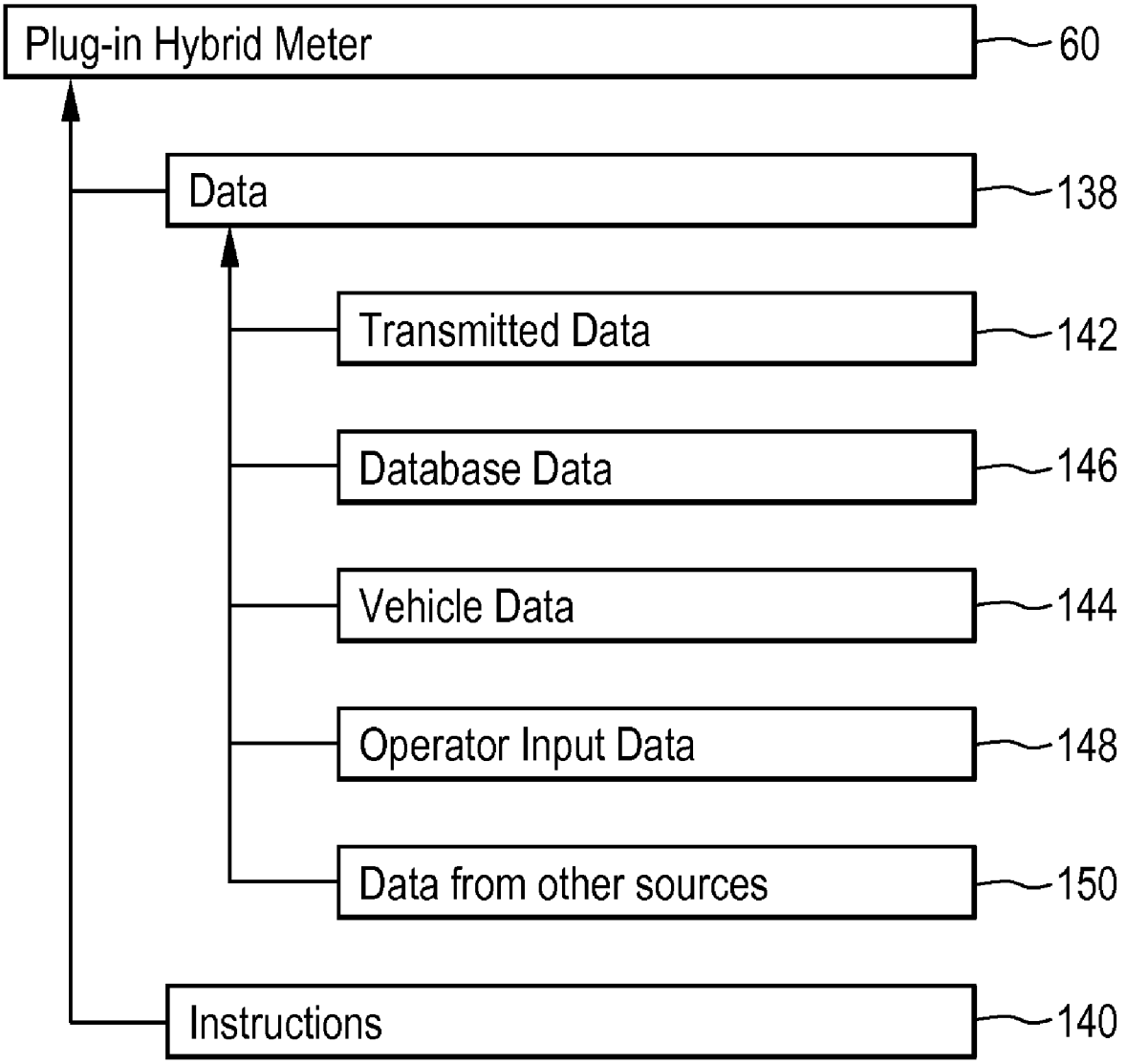
Plug-in Hybrid Meter
60
Data
138
Transmitted Data
142
Database Data
146
Vehicle Data
144
Operator Input Data
148
Data from other sources
150
Instructions
140

FIG. 11

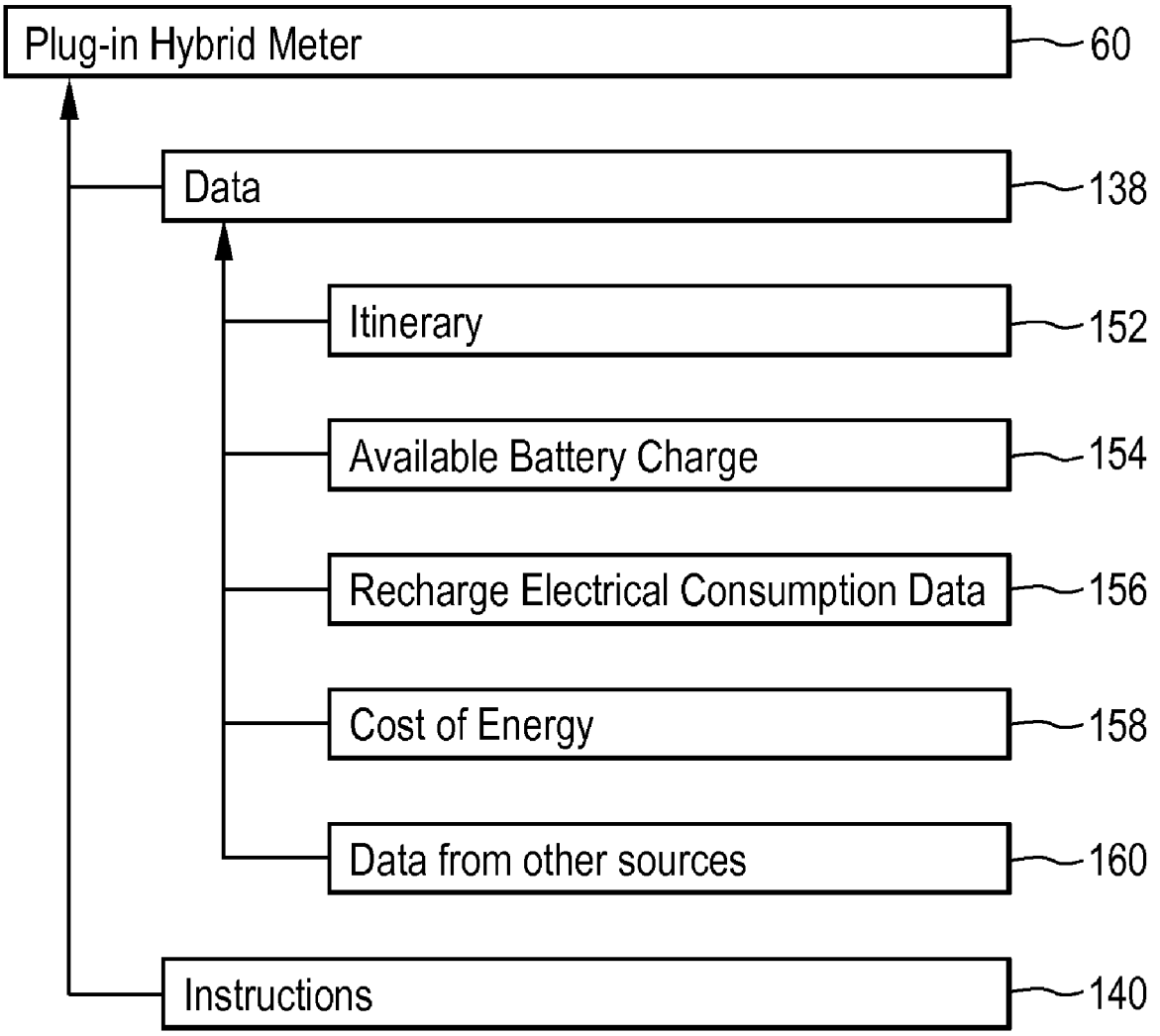
Plug-in Hybrid Meter
60
Data
138
Itinerary
152
Available Battery Charge
154
Recharge Electrical Consumption Data
156
Cost of Energy
158
Data from other sources
160
Instructions
140

FIG. 12

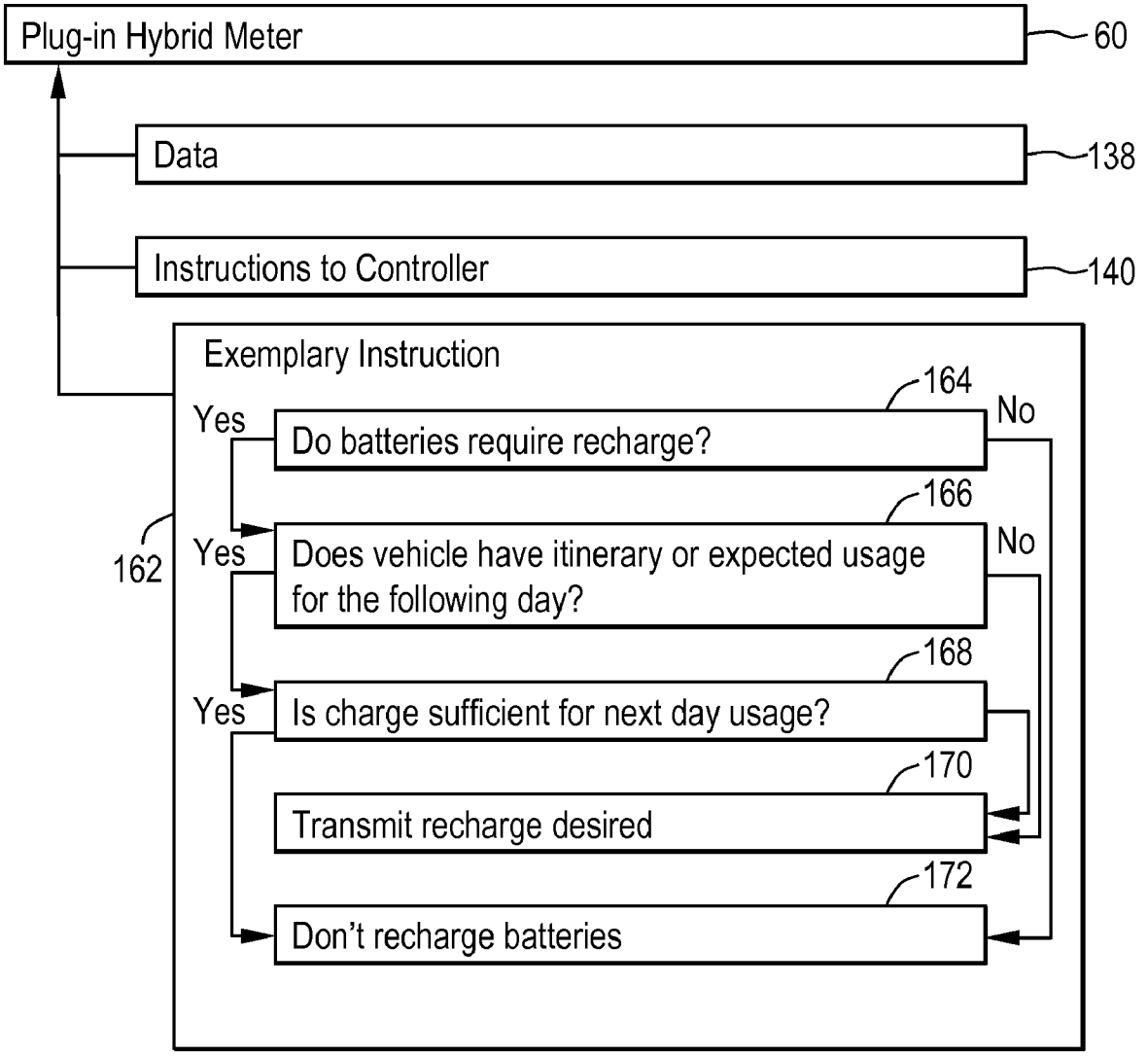
Plug-in Hybrid Meter
60
Data
138
Instructions to Controller
140
Exemplary Instruction
162
164
Do batteries require recharge?
Yes
No
166
Does vehicle have itinerary or expected usage for the following day?
Yes
No
168
Is charge sufficient for next day usage?
Yes
170
Transmit recharge desired
172
Don't recharge batteries

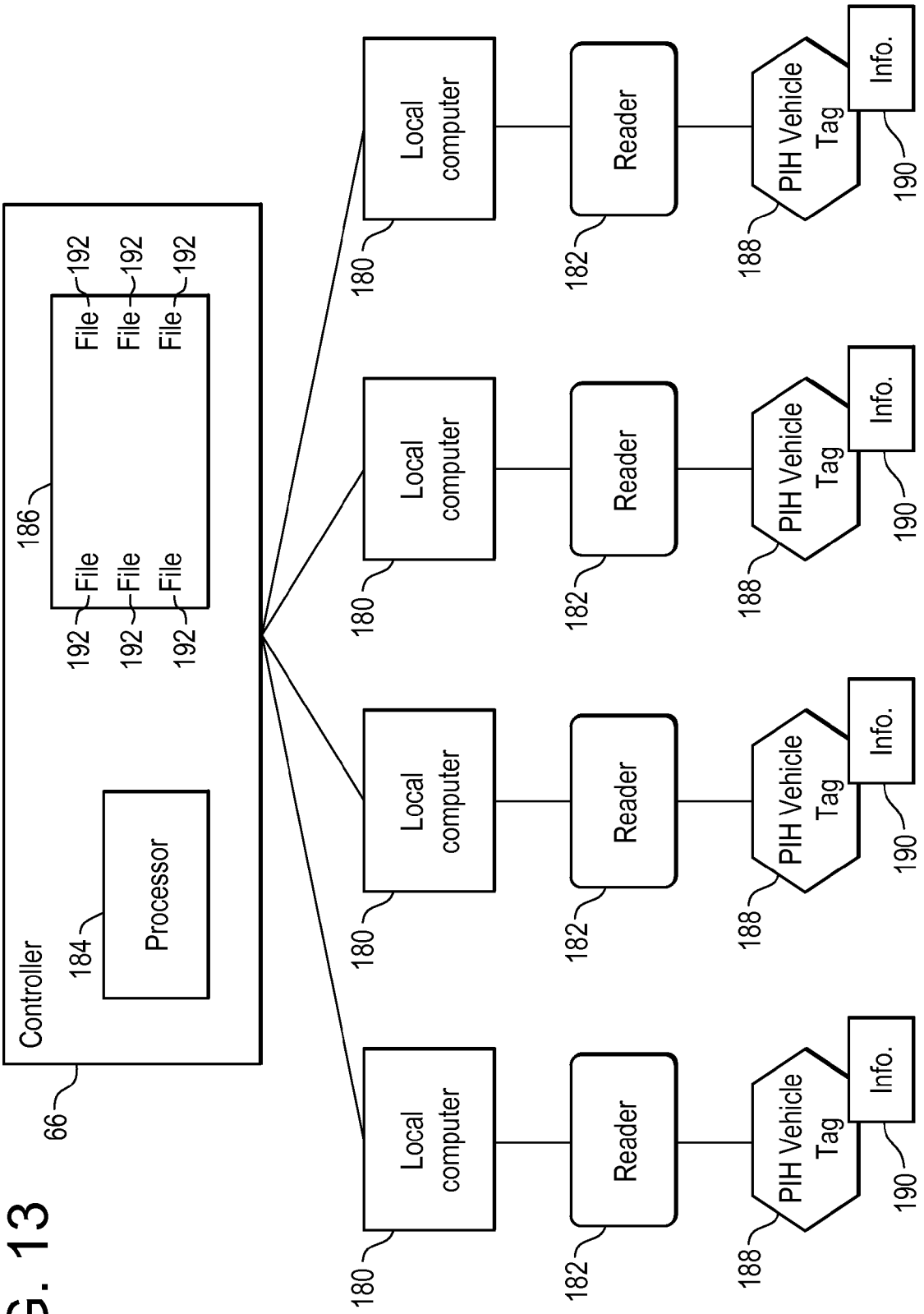
Controller
66
Processor
184
186
File
192
Local computer
180
Reader
182
PIH Vehicle Tag
188
Info.
190

FIG. 13

HYBRID VEHICLE RECHARGING SYSTEM AND METHOD OF OPERATION

BACKGROUND OF THE INVENTION

The present invention relates generally to a system for recharging plug-in hybrid vehicles and more particularly to a system that balances the electrical power demands on local distribution networks.

Due to rising cost of petroleum and the fuels derived from it, the desire to improve efficiency to reduce air pollutants and increasingly more restrictive regulatory requirements, the automotive industry has developed new types of vehicles that utilize a combination of power sources to provide the necessary energy to provide propulsion for the vehicle. Rather than rely solely on an internal combustion engine, these new vehicles, referred to as hybrid vehicles, utilize an internal combustion engine in combination with an electric motor. Another version called a plug-in hybrid may also supplement the charging of the batteries from the electric grid or other sources. Depending on the mode of operation, the vehicle will use the combustion engine, the electric motor, or a combination thereof. By using the electric motor at various times, the combustion engine could be shut off, reducing the amount of gasoline or other fuel consumed using electricity to power the motor instead. The electric motor is powered by batteries that are periodically recharged through a combination of a generator coupled to the combustion engine, regenerative breaking technology and from the local utility grid or other external source of electricity. Regenerative breaking allows the capture of energy that would otherwise be dissipated through heat when the vehicle is slowed down or brought to a stop.

Hybrid vehicles provided many advantages over previously introduced all electric vehicles. The hybrid vehicle provided greater range and more flexibility for the operator. Since the all-electric vehicle needed to be charged periodically, and required several hours at a minimum to recharge, the operator needed to remain aware of the level of charge remaining in the batteries to ensure they were able to return to their charging station. Hybrid vehicles, in contrast, by having two different sources of propulsion do not carry the same risks due to the wide availability of fuels such as gasoline.

A typical hybrid vehicle uses a nickel metal hydride battery to store electrical charge. When run in pure electric mode, the hybrid vehicle can only operate for short distances, 2 km-32 km for example, before requiring the use of the gasoline engine. Since the gasoline engine recharges the batteries, at least in part, the vehicle manufacturers need to balance the amount of battery storage against fuel efficiency to provide a vehicle that meets the consumers performance expectations.

To further lower emissions and increase gas mileage, some manufacturers have developed so-called "plug-in" hybrid ("PIH") vehicles. The PIH vehicles include a receptacle that connects the batteries to a standard 110V or 220V household electrical outlet and allows the consumer to recharge the batteries using utility electric power rather than by burning gasoline or other fuel in a combustion engine. This allows the PIH vehicles to have a longer range in electric mode of operation since larger capacity batteries may be used, resulting in vehicle that uses less gasoline and thus lower emissions. While the PIH vehicle does place additional demands on the existing utility electrical distribution.

While existing electrical distribution systems are suitable for this new purpose, there remains a need for improvements, particularly regarding the control of recharging of PIH vehicles and the increased efficiencies that may be gained from existing utility electrical distribution networks.

SUMMARY OF THE INVENTION

A system for recharging a hybrid vehicle having a battery is disclosed. The system includes a meter having a power connection configured to electrically couple to the hybrid vehicle. A local electrical distribution network is electrically coupled to the meter. A controller associated with the local electrical distribution network and disposed in communication with the utility distribution network and the meter, said controller including a processor responsive to executable computer instructions for providing a signal to said meter to allow electrical power to flow to said battery.

In another embodiment a hybrid vehicle is disclosed. The hybrid vehicle includes an electric motor coupled to a battery. A receptacle configured to receive electrical power from an external energy source is also electrically coupled to the battery. A meter is electrically coupled to the battery and receptacle where the meter is configured to control the flow of electrical power between the receptacle and the battery.

A method for collecting fees or credits such as carbon credits for recharging a hybrid vehicle is also disclosed. The method includes providing a controller containing a plurality of utility accounts wherein each utility account is associated with a corresponding individual or business entity. A meter associated with a hybrid vehicle is communicating to determine if the hybrid vehicle is associated with one of the utility accounts. Electrical power consumption by the hybrid vehicle authorizing at a first tariff rate if the hybrid vehicle is associated with one of the utility accounts. Finally, the hybrid vehicle is assigned an approved recharge time period.

A method for recharging a plurality of hybrid vehicles connected to a local utility network is also disclosed. The method includes the step of determining a number of hybrid vehicles connected to the local electrical distribution network. The electrical power characteristics of the local electrical distribution network are determined along with an off-peak period based on an electrical demand profile for the local electrical distribution network. Rerecharge times are scheduled for each of the plurality of hybrid vehicles wherein the scheduling is based on a balancing of the electrical power characteristics such as a demand profile and the number of hybrid vehicles. The final step includes activating the recharging of each of the hybrid vehicles at predetermined times during the off-peak period.

A meter associated with a plug-in hybrid vehicle is also disclosed having an electrical measuring device and a communications device. A processor is electrically coupled to the electrical measuring device and the communications device. The processor is responsive to executable computer instructions for receiving schedule instructions through the communications device and the processor includes means for connecting and disconnecting electrical power

BRIEF DESCRIPTION OF THE DRAWINGS

Referring now to the drawings, which are meant to be exemplary and not limiting, and wherein like elements are numbered alike:

FIG. **1** is a schematic illustration of a utility electrical distribution system;

FIG. **2** is an illustration of an average electrical demand profile for electrical usage of a large metropolitan city having the electrical distribution network of FIG. **1**;

FIG. **3** is a schematic illustration of a PIH vehicle charging system in accordance with an exemplary embodiment;

FIG. **4** is a representation of a controller which is disposed in communication with one or more PIH vehicles and the utility distribution network;

FIG. **5** is a representation of a controller which is disposed in communication with one or more PIH vehicles and a utility distribution network, the data sources in FIG. **5** are described in terms of the kind of information including, but not limited to the number of vehicles coupled to the network, the state of charge of the batteries in the vehicles, the demand profile of the network, electrical power availability, weather data, and account information;

FIG. **6** is a representation of a controller which is disposed in communication with one or more PIH vehicles, a utility distribution network, and data sources, the controller of FIG. **6** is arranged to receive instructions, including but not limited to instructions on scheduling recharging time periods for vehicles coupled to the network;

FIG. **7** is an example of a PIH vehicle recharging schedule where the increase in demand during an off peak time period remains relatively constant;

FIG. **8** is another example of a PIH vehicle recharging schedule where the demand from PIH vehicles is increased during time periods where the base electrical load is decreasing;

FIG. **9** is a representation of a controller which is disposed in communication with one or more PIH vehicles, a utility distribution network, and data sources, the controller of FIG. **9** is arranged to receive instructions, including but not limited to instructions on determining what tariff rate to charge a customer, and the automatic replenishing of the customers account;

FIG. **10** is a representation of a PIH vehicle meter which is coupled to a PIH vehicle and disposed in communication with the controller of FIG. **4** and the utility electrical distribution network;

FIG. **11** is a representation of a PIH vehicle meter which is disposed in communication with the controller of FIG. **4** and a utility electrical distribution network, the data sources in FIG. **11** are described in terms of the kind of information including, but not limited to the vehicle itinerary, available battery charge, recharge electricity usage data, and cost of energy;

FIG. **12** is a representation of a PIH vehicle meter which is disposed in communication with the controller of FIG. **4**, a utility electrical distribution network, and data sources, the meter of FIG. **12** is arranged to receive instructions, including but not limited to instructions on determining whether or not a PIH vehicles batteries need to be recharged, or whether the recharging can be delayed; and

FIG. **13** is a schematic representation of an alternate embodiment for collecting fees associated with recharging a PIH vehicle.

DETAILED DESCRIPTION

FIG. **1** illustrates an exemplary embodiment of a utility electrical distribution network **20**. The utility network **20** includes one or more power plants **22** connected in parallel to a main distribution network **24**. The power plants **22** may include, but are not limited to: coal, nuclear, natural gas, or incineration power plants. Additionally, the power plants **22** may include one or more hydroelectric, solar, or wind turbine power plants. It should be appreciated that additional components such as transformers, switchgear, fuses and the like (not shown) may be incorporated into the utility network **22** as needed to ensure the safe and efficient operation of the system. The utility network **20** may be interconnected with one or more other utility networks to allow the transfer of electrical power into or out of the electrical network **20**.

The main distribution network **24** typically consists of medium voltage power lines, less than 50 kV for example, and associated distribution equipment which carry the electrical power from the point of production at the power plants **22** to the end users located on local electrical distribution networks **26**, **28**. The local distribution networks **26**, **28** are connected to the main distribution network by substations **30** which adapt the electrical characteristics of the electrical power to those needed by the end users. Substations **30** typically contain one or more transformers, switching, protection and control equipment. Larger substations may also include circuit breakers to interrupt faults such as short circuits or over-load currents that may occur. Substations **30** may also include equipment such as fuses, surge protection, controls, meters, capacitors and voltage regulators.

The substations **30** connect to one or more local electrical distribution networks, such as local distribution network **26**, for example, that provides electrical power to a commercial area having end users such as an office building **32** or a manufacturing facility **34**. Local distribution network **26** may also include one or more transformers **36** which further adapt the electrical characteristics of the delivered electricity to the needs of the end users. Substation **30** may also connect with other types of local distribution networks such as residential distribution network **28**. The residential distribution network **28** may include one or more residential buildings **46** and also light industrial or commercial operations.

The electrical power available to an end user on one of the local distribution networks **26**, **28** will depend on the characteristics of local distribution network and where on the local network the end user is located. For example, local distribution network **28** may include one or more transformers **40** that further divides local distribution network **28** into two subnetworks **42**, **44**. One such electrical characteristic is the maximum power that may be delivered to a local distribution network. While the utility network **20** may have power plants **22** capable of generating many megawatts of electrical power, this power may not be completely available to an end user in a residence **46** on a local distribution network **28** since the intervening equipment and cabling restricts, or limits the delivery of electrical power.

Existing local distribution networks **26**, **28** are designed to provide the electrical power demanded during peak usage periods. Referring to FIG. **2**, it can be seen that the demand for electrical power does not remain constant during the day, but rather peaks in the late afternoon/early evening. The demand curve illustrated in FIG. **2** is an average electrical demand for a large metropolitan city. The actual demands on the local distribution network will change from one day to the next and will also differ depending on the season. The actual demand will be the function of many parameters, including the weather, time of day, season of the year and the like. Further if a local distribution network **26**, **28** experiences an increase in electrical demand due to other factors, such as new construction for example, changes may need to be made to the local distribution network to allow sufficient power to flow to the local distribution network, even though the utility network **20** has sufficient electrical production capacity to meet the needs of the new demand.

PIH vehicles represent one such type of increase in electrical power demand on the utility network **20**. It has been estimated that the existing utility networks have sufficient generation capacity such that PIH vehicles would need to achieve a market penetration of 30%-40% before additional capacity would need to be added. However, a lower market

penetration as well as the higher market penetrations may result in power constraints on individual local distribution networks depending on a number of factors including the local distribution network power delivery capacity, the existing base load and the number of PIH vehicles on the local distribution network. The power constraints on a local distribution network, such as residential network **28** for example, may be further complicated by the demographics of the network. In a residential network, the owners of PIH vehicles will be tend to arrive home from work in the late afternoon or early evening. When the owners arrive home, they will tend to connect their PIH vehicle to an electrical outlet during the same time frame. Without some type of control, the additional electrical demands from the PIH vehicles will be placed on the local distribution network at the time of day which also corresponds to the peak demand period.

Referring now to FIG. **3**, an exemplary embodiment of a system for controlling the recharging of a PIH vehicle will be described. A PIH vehicle **48** typically includes an internal combustion engine **50** coupled to a motor **52** through a transmission **54** that transfers the power from the engine **50** and motor **52** to the wheels **56**. A battery **58** is electrically coupled to provide electricity to power the motor **52**. Alternatively, the motor **52** may be arranged to act as a generator driven by the engine **50** to provide recharging of the battery **58**. It should be appreciated that the battery **58** is referred to as a single component, however, the battery **58** may be comprised of a number of electrochemical cells or discrete individual batteries that are coupled together in series or parallel, depending on the voltage and power needs. The battery **58** is electrically coupled to a receptacle **62** which provides an external connection to a power source. A meter **60** is electrically connected between the receptacle **62** and the battery **58** to control the flow of electrical power to and from the battery **58**. A sensor **61** coupled to meter **60** is arranged to measure the charge remaining in the battery **58**.

The meter **60** may be embodied in the form of computer-implemented processes and apparatuses for practicing those processes. The meter **60** may also be embodied in the form of a computer program product having computer program code containing instructions embodied in tangible media, such as floppy diskettes, CD-ROMs, hard drives, USB (universal serial bus) drives, or any other computer readable storage medium, such as random access memory (RAM), read only memory (ROM), or erasable programmable read only memory (EPROM), for example, wherein, when the computer program code is loaded into and executed by a computer, the computer becomes part of the meter **60**. The meter **60** may also be embodied in the form of computer program code, for example, whether stored in a storage medium, loaded into and/or executed by a computer, or transmitted over some transmission medium, such as over electrical wiring or cabling, through fiber optics, or via electromagnetic radiation, wherein when the computer program code is loaded into and executed by a computer, the computer becomes part of the meter **60**. When implemented on a general-purpose microprocessor, the computer program code segments configure the microprocessor to create specific logic circuits. As will be described in more detail below, one example of a technical effect of the executable instructions is to determine the level of charge in the batteries **58** and determine if the current time period corresponds with an approved recharge time period or reduced electricity cost based on the time of day or the intended use in a vehicle.

The meter **60** includes a communications device **64** that provides a means for the meter to communicate with external devices such as controller **66** as will be described in more detail herein. The communications device **64** may incorporate any type of communications protocol capable of allowing the meter **60** to receive, transmit and exchange information with one or more external devices. Communications device **64** may use communication systems, methodologies and protocols such as, but is not limited to, TCP/IP, IEEE 802.11, RS-232, RS-485, Modbus, IrDA, infrared, radio frequency, electromagnetic radiation, microwave, Bluetooth, powerline, telephone, local area networks, wide area networks, Ethernet, cellular, fiber-optics, barcode, and laser.

A cable **68** connects the receptacle **62** to an outlet **70** in residence **46**. The cable **68** is appropriately sized to support the flow of electrical power between the PIH vehicle **48** and the residence **68**. In the exemplary embodiment, the residential household circuit the cable will support 1.5 kilowatts at 110 volts to 3.0 kilowatts at 240 volts. The outlet **70** is connected to a residential meter **72** that connects the residence **46** to the local distribution network **28**. The residential meter **72** measures the amount of electrical power supplied from the local distribution network **28** to the residence **46**.

The meter **60** is disposed in communication with and to exchange data with controller **66**. As will be described in more detail below, the controller **66** provides control functionality for organizing, scheduling and authorizing the recharging of PIH vehicle **48**. In the exemplary embodiment, the controller **66** is described as being single computer processing device, however, it is contemplated that the controller **66** may also be a distributed or networked computing system comprised of a number of processing components. For example, each local distribution network **26**, **28** may have an individual controller associated with providing the desired functionality to that network. These local distribution controllers may be in communication with each other, or with one or more "upstream" controllers within the utility system **20**.

The controller **66** and the meter **60** may be any suitable control device capable of receiving multiple inputs and providing control functionality to multiple devices based on the inputs. Controller **66** and meter **60** includes a processor which is a suitable electronic device capable of accepting data and instructions, executing the instructions to process the data, and presenting the results. Processor may accept instructions through a user interface, or through other means such as but not limited to electronic data card, voice activation means, manually-operable selection and control means, radiated wavelength and electronic or electrical transfer. Therefore, the processor can be a microprocessor, microcomputer, a minicomputer, an optical computer, a board computer, a complex instruction set computer, an ASIC (application specific integrated circuit), a reduced instruction set computer, an analog computer, a digital computer, a molecular computer, a quantum computer, a cellular computer, a superconducting computer, a supercomputer, a solid-state computer, a single-board computer, a buffered computer, a computer network, a desktop computer, a laptop computer, a scientific computer, a scientific calculator, or a hybrid of any of the foregoing.

Referring now to FIG. **4**, there is shown the controller **66** receiving as inputs data **74**, and instructions **76**. Controller **66** also outputs instructions **78**. The data **74** may come from a variety of sources, such as transmitted data **80**, database data **82**, local distribution network data **84**, main distribution network data **86**, and other data **88**. The data and instruction outputs from controller **66** may be transmitted to the PIH vehicle **48**, the residential meter **70**, a controller on another local distribution network, or a controller associated with the main distribution network **24**.

Another embodiment of the controller **66** is shown in FIG. **5**. The data **74** is described in terms of the type of information

represented by the data, such as the number of vehicles on the local distribution network **90**, the state of charge of each of the batteries in the vehicles **92**, the expected demand profile for the local distribution network **94**, the electrical power availability from the main distribution network **96**, weather data **98**, electrical power consumption by a PIH vehicle for a utility account **100**, and a utility account information for the PIH vehicle **102**. The utility account information will include the name, address, financial account information, and account holder preferences. Typically, the account information **101** will be associated with an individual or business entity. While the utility account information is described herein as having a single PIH vehicle associated therewith, it is contemplated that a single utility account may be associated with multiple PIH vehicles. Similar to the embodiment shown in FIG. **4**, the data and instruction outputs from controller **66** may be transmitted to the PIH vehicle **48**, the residential meter **70**, a controller on another local distribution network, or a controller associated with the main distribution network.

Referring now to FIG. **6**, another embodiment of the controller **66** is illustrated. The controller **66** receives inputs **74**, instructions **76** and outputs instructions **78**. The instructions **76** may include automated instructions that are executed on a processor associated with controller **66** and responsive to executable computer instructions. These instructions **76** may take the form of software, firmware, or any other form or combination of forms in which computer instructions may be embodied. The instructions **76** may or may not be subject to reprogramming or other change. An exemplary instruction **104** includes a process for scheduling the recharging of PIH vehicles on a local distribution network. First the controller **66** determines if there are any requests for PIH vehicle recharge **106**. If there is a demand from PIH vehicles, it is determined if the aggregate recharging demand exceeds the local demand threshold **108**. As discussed above, an individual local distribution network will have an electrical characteristic, such as the maximum power delivery for example. To maintain reliability, the utility will want to set a threshold, 70%-80% of the maximum power delivery capacity for example, in order to ensure that adequate power is available to meet the demands of the end users. To determine if the threshold will be exceeded by the demands placed on the local distribution network **28** by the PIH vehicles, controller may compare the PIH vehicle electrical demand against the expected electrical demand profile data **94** and the main distribution network availability data **96**.

If the demand from the PIH vehicles is low enough, the controller may assign a simple recharge start and stop time **112** for the PIH vehicles during the off-peak period **114**. If the demand from the PIH vehicles is sufficiently large, the controller **66** enters into instruction **110** where a schedule is formed by controller **66** for each PIH vehicle. The schedule is arranged to account for factors such as the expected electrical demand profile, the main distribution network power availability, the battery charge levels in each of the PIH vehicles, and charge rates for each of the PIH vehicles. The recharge schedule is arranged to stagger the start and stop times for each of the PIH vehicles on the local distribution network **28** to keep the total electrical power demand on the local distribution network **28** below the demand threshold and to maximize the efficient use of power plants **22**. Once the controller **66** formulates the schedule, the respective recharge start and stop times are transmitted to each of the PIH vehicles on the local distribution network **28**.

One example of a recharge schedule is illustrated in FIG. **7**. Here, the controller **66** initiates the recharge schedule at 23:00 (11:00 PM). In this embodiment, the start and stop times for each of the PIH vehicles is arranged to maintain a constant electrical demand between 23:30 and 06:00 as illustrated by line **116**. As shown in FIG. **7**, the recharge times for each of the PIH vehicles is not the same and will depend on the state of charge of the batteries and the rate of charge that the batteries can maintain.

Another example of a recharge schedule is shown in FIG. **8**. In this embodiment, the controller **66** bias the recharge times between 1:00 and 6:00 and especially between 2:00 and 4:00. This creates a PIH vehicle electrical demand as illustrated by line **118**. The biasing of the PIH vehicle demand could be desired, for example, to offset the reduction in base demand from the end users to maintain a more constant total electrical demand from the local distribution network and make more efficient utilization of the power plants **22**.

The controller **66** may also include other instructions such as automated instructions that are executed on a processor associated with controller **66** and responsive to executable computer instructions. Another exemplary embodiment instruction **120** that includes a method for collecting fees as illustrated in FIG. **9**. As will be discussed below in more detail, after receiving data **90** that a PIH vehicle is connected to the local distribution network **28**, controller **66** determines if the PIH vehicle has an account with the utility **128**. In the exemplary embodiment, the PIH vehicle accounts maintained by the utility are "pre-paid" where funds are placed in the account prior to the account holder consuming electricity. The controller **66** may be connected to one or more preauthorized financial accounts **122** such as bank checking account **124** or credit card account **126** (FIG. **3**). This connection would allow controller **66** to further execute instructions that result in the transfer of funds to replenish the utility account.

A utility account may be desirous to both the utility and the account holder. In exchange for the pre-paid account and the ability to schedule the recharging times, the utility may extend a lower tariff rate to the account holder thus reducing the cost of operating the PIH vehicle. Alternatively, the account holder may desire to purchase the electrical power from a particular source, such as a renewable energy source such from a solar or wind generation system. In the exemplary embodiment instruction **120**, if the PIH vehicle does not have an account, the controller **66** changes the tariff rate for the PIH vehicle electricity consumption to a second rate **130**. In the exemplary embodiment, the second rate **130** is higher than the tariff charged to an account holder. If a utility account does exist, controller **66** determines if the account has sufficient funds **132** to recharge the PIH vehicle based on data **92** regarding the level of charge in the batteries. When sufficient funds are available, the utility account is debited **134** for the cost of the recharge and the vehicle is scheduled for a recharging period as discussed above. In circumstances where there are insufficient funds, the controller may initiate a transfer **136** from the preauthorized financial accounts **122** as discussed above.

Referring now to FIG. **10**, there is shown the meter **60** receiving as inputs data **138**, and instructions **140**. The data **138** may come from a variety of sources, such as transmitted data **142**, database data **146**, vehicle data **144**, operator input data **148**, and other data **150**. The data and instruction outputs from meter **60** may be transmitted to controller **66**, the residential meter **70**, or a controller associated with the main distribution network.

Another embodiment of the meter **60** is shown in FIG. **11**. The data **138** is described in terms of the type of information represented by the data, such as the expected itinerary of the vehicle **152**, the state of charge of each of the batteries **154**,

the recharge electrical consumption data **156**, the cost of electrical energy **158**, and data from other sources **160**. Similar to the embodiment shown in FIG. **10**, the data and instruction outputs from controller **66** may be transmitted to the controller **66**, the residential meter **70**, or a controller associated with the main distribution network. This data may be used advantageously to help in the cost effective and efficient scheduling of the recharge of the PIH vehicle. For example, data on the itinerary of the vehicle for the following day, along with the state of charge of the batteries, may allow the controller **66** to skip the recharging period of the PIH vehicle if the vehicle has sufficient charge remaining for the travel expected the next day. This would provide further options to assist the controller **66** in balancing the demand from the local distribution networks **26**, **28** and the power available from the main distribution network **24**.

In another embodiment, the recharging schedule includes recharging periods during other parts of the day. For example, an end user on the residential local distribution network **28** leaves their house in the morning and travels in the PIH vehicle to a place of work that includes a charging station. After plugging the PIH vehicle into the commercial local distribution network **26**, the meter **60** communicates information, such as account information, state of charge for example, with the controller **66**. The controller **66** may then schedule a recharging period for the PIH vehicle during the day if there is available electrical power. The ability to dispatch and include additional loads created by PIH vehicles would allow the utility to further increase their efficiency of their operations by better utilizing power plants **22** or talking advantage of lower cost electrical power from other distribution systems as it becomes available.

Referring now to FIG. **12**, another embodiment of the meter **60** is illustrated. The meter **60** receives data **138**, and instructions **140**. The instructions **140** may include automated instructions that are executed on a processor associated with meter **60** and responsive to executable computer instructions. These instructions **140** may take the form of software, firmware, or any other form or combination of forms in which computer instructions may be embodied. The instructions **140** may or may not be subject to reprogramming or other change. An exemplary instruction **162** includes a process for scheduling the recharging of the PIH vehicle based on an itinerary data **152**. First the meter **60** determines if the batteries **58** require recharge **164**. If a recharge is desired, the vehicle's itinerary is interrogated **166** to determine if there is sufficient charge **168** to meet the needs of the vehicle owner. If the PIH vehicle does not have itinerary data **152** or if the charge is insufficient, the meter **60** transmits data **170** to the controller **66** indicating a desire to be placed on the recharging schedule. If the batteries are not in need of recharge, or if the itinerary data **152** indicates that the charge is sufficient, the meter **60** either indicates no recharge is needed **172** to controller **66**. Allowing a PIH vehicle operator to determine whether or not to recharge based on an itinerary may provide advantages to the account holder. For example, if the utility has different tariff rates for different days, weekdays versus weekends for example, by programming the meter **60** to skip a day if cost of energy data **158** indicates that the electricity will be less expensive on an alternate day.

It should be appreciated that the meter **60** while discussed herein in terms of its processor functionality may also include a number of components. It is contemplated that the meter may, in addition, include hardware elements such as, but not limited to a current transformer, an induction meter, a power supply, a metering engine such as an digital signal processor, and the like.

Further, in another alternate embodiment, the meter **60** is arranged to allow the flow of electrical power from the batteries **58** into the residence **46**. In this embodiment, where an unexpectedly high demand is experienced on the local distribution network **28**, the controller **66** may instruct the meter **60** to reverse the flow of electrical power from the batteries **58** back to the residence **46** in order to offset the power usage in the residence **46**. The cabling installed in most residential buildings will typically allow a maximum transfer of 1 kilowatt to 2 kilowatts of electrical power. While this may not be sufficient to meet all the electrical needs of the residence **46**, this could provide an additional advantage to the utility in allowing the balancing of loads and supply to meet the needs of the local distribution network **28**.

As discussed above, the utility account may be desirous to both the utility and the account holder. In exchange for the pre-paid account and the ability to schedule the recharging times, the utility may extend a lower tariff rate to the account holder thus reducing the cost of operating the PIH vehicle. Referring to FIG. **13**, an alternate embodiment collection system is illustrated. Given the mobility of modern society, it is likely that PIH vehicle users may want to recharge the vehicles batteries at more than one location. For example, the end user may wish have the batteries charged while they are working or otherwise traveling. Therefore it would be advantageous to have a system that facilitates the collection of fees in a manner that provides benefits to both the utility and the end user.

In this embodiment, the controller **66** is coupled with one or more remote computers **180** and a plurality of readers **182** associated with the remote computers **180**. The remote computers could be another controller on a different utility system, a controller on another main distribution system, a controller on a local distribution network or a computer associated with a "recharging lot." The recharging lot could be either a commercial operation conveniently located close to businesses or shopping centers, or alternatively could be a location provided by the utility or the local government to encourage the use of PIH vehicles. The controller **66** in this embodiment includes a processor **184** capable of a programmed response and to execute computer instructions. The controller **66** may also have a storage unit **186** that may comprise a magnetic, solid state, optical, or other storage media for storing applications, data, operating systems and other information. It should be appreciated that the controller **66** may also be connected to other processing systems, such as financial accounts **122**, credit card accounts **126** and bank checking accounts **124** for example, to facilitate the exchange of funds to replenish an account as described above.

Each subscribing user will have a unique account associated with the PIH vehicle. To facilitate the operation of the recharging system, identification data is located in the PIH vehicle **48**. This information may be embedded as data in the meter **60**, or alternatively be located in a "tag" **188**. The information data **190** embedded in the tag **188** may include information on the utility account, which utility the account is held, maximum acceptable energy costs, recharge rates and the like. The tag **188** may transmit the identification data **190** using any means capable of interaction with the reader **182**, including but not limited to radio-frequency, infrared or bar code. Once the reader **182** detects the tag **188**, when the PIH vehicle is pulled into a recharging space in a parking lot for example, the information data **190** is transmitted by the local computer **180** to the controller **66** for validation. The transmission of information data **190** may be accomplished by any

suitable means, including but not limited to local area networks, wide area networks, satellite networks, Ethernet, or the Internet.

When the information data **190** is transmitted to controller **66**, the controller **66** searches through files **192** created by processor **184** for each subscribing utility account and stored on storage unit **186**. The files may contain such information as, but not limited to, an individual account holders name, address, tag information, prefunded account information, and account holder energy cost preferences. The files **192** may also include information that may be used to replenish the prefunded utility account balance. Once the controller **66** determines that the PIH vehicle has a valid account, data is transmitted to local computer **180** authorizing the recharging along with any parameters that may affect the length, amount or cost of the recharge. In the embodiment where the recharging occurs in a commercial recharging lot, the data may also include information on how funds will be exchanged between the commercial lot and the utility. Where the recharge is to be for a fixed amount, the controller **66** debits the utility account for the appropriate amount. Where the amount to be charged is unknown at the time of the initial data exchange, the local computer **180** communicates with the controller **66** once the charge is completed with cost information for the recharge.

The use of PIH vehicles is expected to reduce the overall amount of carbon emissions from the driving of personal vehicles since the emissions associated with generating electricity are lower than the cumulative emissions from fossil fuel based automobiles. One method of tracking emissions is called a "carbon credit." Under international treaties, such as the Kyoto Protocol, carbon emission quotas are imposed on countries to place a cap on emissions. Each nation in turn places quotas on industries within their country. A carbon credit is a tradable commodity that is created through "green" or low emission activities. Through the use of carbon credits, a high emission operator may offset their emissions by purchasing credits from the producers of the carbon credits. It should be appreciated that while the embodiments discussed herein have referred to "fund" transfers, these transfers may also be in the form of a carbon credit. Further, due to the increased electrical demand from PIH vehicles, utilities may have increased emissions even though the over all combined emission levels are lower. It is contemplated that the utilities would be provided carbon credits or some other offset associated with providing of electrical power to PIH vehicles.

It should be appreciated that a system of authorized utility accounts may be advantageous to governmental tax authorities as well. As the availability and proliferation of PIH vehicles expands, the tax base of what is known as "road use taxes" will decrease as well. Road use taxes are generated from the sale of fuel, such as gasoline for example, and used by governmental authorities to build and maintain the system of roadways used by society. By using less fuel the PIH vehicle owner will continue to use the roadways while paying less in taxes for that use. While this may be desirous by the individual, in the long term this could be detrimental for society. By maintaining the utility accounts that segregate electrical consumption by PIH vehicle from that of the normal residential electrical loads. While a new road-use tax could be imposed on the electricity consumed by the end users, this could unfairly penalize those utility customers who own conventional combustion engine vehicles. These end users would end up paying for road taxes twice, once on their gasoline purchase and then again with their electricity consumption. By implementation of the utility accounts and the segregating PIH consumption from the other residential loads, the governmental tax authority is provided with an appropriate means for collecting road use taxes without penalizing other residences that do not have a PIH vehicle

This written description uses examples to disclose the invention, including the best mode, and also to enable any person skilled in the art to practice the invention, including malting and using any devices or systems and performing any incorporated methods. The patentable scope of the invention is defined by the claims, and may include other examples that occur to those skilled in the art. Such other examples are intended to be within the scope of the claims if they have structural elements that do not differ from the literal language of the claims, or if they include equivalent structural elements with insubstantial differences from the literal languages of the claims.

What is claimed is:

1. A system for recharging a hybrid vehicle having a battery, said system comprising:

a meter having a power connection configured to electrically couple to said hybrid vehicle;

a local electrical distribution network electrically coupled to said meter; and,

a controller associated with said local electrical distribution network and disposed in communication with said local distribution network and said meter, said controller including a processor responsive to executable computer instructions for providing a signal to said meter to allow electrical power to flow to said battery;

a plurality of meters electrically coupled to said local electrical distribution network, each of said plurality of meters having a power connection configured to electrically couple to an associated hybrid vehicle;

wherein said processor is responsive to executable computer instructions for determining the number of hybrid vehicles coupled to said local electrical distribution network via an associated one of said plurality of meters;

wherein,

said controller receives data and instructions as inputs and provides data and instructions as outputs;

said data inputs describing, a number of hybrid vehicles that are connected to said local electrical distribution network, the charge state of each of said hybrid vehicles, electrical characteristics of said local electrical distribution network, expected power demand profile of said local electrical distribution network, and electrical power availability from a utility distribution network;

said instruction inputs enabling said controller to determine recharging times based on the number of hybrid vehicles connected to the local electrical distribution network, the expected power demand profile of said local electrical distribution network, and the availability of electrical power to said local electrical distribution network;

said output data describing the number of hybrid vehicles on the local electrical distribution network and aggregated data on expected electrical power requirements to said local electrical distribution network; and, said output instructions enabling said meters associated with said hybrid vehicles to recharge said hybrid vehicles during a defined time period.

2. The system for charging a hybrid vehicle of claim **1** further comprising:

a plurality of hybrid vehicles electrically coupled to said local electrical distribution network, each of said plurality of hybrid vehicles having an associated meter;

wherein said processor is responsive to executable computer instructions for determining the number of hybrid vehicles coupled to said local electrical distribution network.

3. The system for charging a hybrid vehicle of claim **1** wherein:

said controller is configured to receive data and instructions as inputs and to provide data and instructions as outputs;

said data inputs disposed in a memory in such a manner as to describe a number of hybrid vehicles that are connected to said local electrical distribution network, the charge state of each of said hybrid vehicles, electrical characteristics of said local electrical distribution network, expected power demand profile of said local electrical distribution network, and electrical power availability from said utility distribution network;

said instruction inputs executable by said processor to enable said controller to determine recharging times based on the number of hybrid vehicles connected to the local electrical distribution network, the expected power demand profile of said local electrical distribution network, and the availability of electrical power to said local electrical distribution network;

said output data disposed in said memory in such a manner as to describe the number of hybrid vehicles on the local electrical distribution network and aggregated data on expected electrical power requirements to said local electrical distribution network; and,

said output instructions executable by said processor to enable said meters associated with said plurality of hybrid vehicles to recharge said hybrid vehicles during a defined time to recharge said hybrid vehicles during a defined time period.

4. The system for charging a plug-in hybrid vehicle of claim **3** wherein each meter associated with said plurality of hybrid vehicles is responsive to data and instructions as inputs and is productive of data as an output;

said meter data input describing electrical demand tariffs;

said meter instruction inputs enabling said meter to control the flow of electrical recharging power to said hybrid vehicle; and,

said meter data output describing the amount of electrical power consumed in recharging the hybrid vehicle, and the time of day said electrical power was consumed.

* * * * *