US007764932B2

(12) **United States Patent**
Rofougaran et al.

(10) **Patent No.: US 7,764,932 B2**
(45) **Date of Patent: Jul. 27, 2010**

(54) **ANTENNA SYSTEM FOR USE WITHIN A WIRELESS COMMUNICATION DEVICE**

(75) Inventors: **Ahmadreza (Reza) Rofougaran**, Newport Coast, CA (US); **Maryam Rofougaran**, Rancho Palos Verdes, CA (US)

(73) Assignee: **Broadcom Corporation**, Irvine, CA (US)

(*) Notice: Subject to any disclaimer, the term of this patent is extended or adjusted under 35 U.S.C. 154(b) by 660 days.

(21) Appl. No.: **11/729,162**

(22) Filed: **Mar. 28, 2007**

(65) **Prior Publication Data**

US 2008/0242237 A1 Oct. 2, 2008

(51) **Int. Cl.**
H04B 1/40 (2006.01)

(52) **U.S. Cl.** **455/77**; 455/125; 455/234.1; 455/333

(58) **Field of Classification Search** 455/77, 455/120, 121, 125, 193.1, 193.2, 230, 240.1, 455/333, 550.1
See application file for complete search history.

(56) **References Cited**

U.S. PATENT DOCUMENTS

7,580,684 B2 * 8/2009 Cyr et al. 455/75
2007/0222605 A1 * 9/2007 Andresky 340/572.7

* cited by examiner

Primary Examiner—Nhan Le
(74) *Attorney, Agent, or Firm*—Garlick Harrison & Markison

(57) **ABSTRACT**

An antenna system includes an antenna, a transmission line, an inductor module, a tunable capacitor module, and control logic. The transmission line is coupled to the antenna and to the inductor module. The tunable capacitor module is coupled to the transmission line in accordance with a capacitance control signal to provide a desired capacitance such that inductance of the inductor module and the desired capacitance tunes the antenna system. The control logic is coupled to generate the capacitance control signal based on the operational parameters.

14 Claims, 16 Drawing Sheets

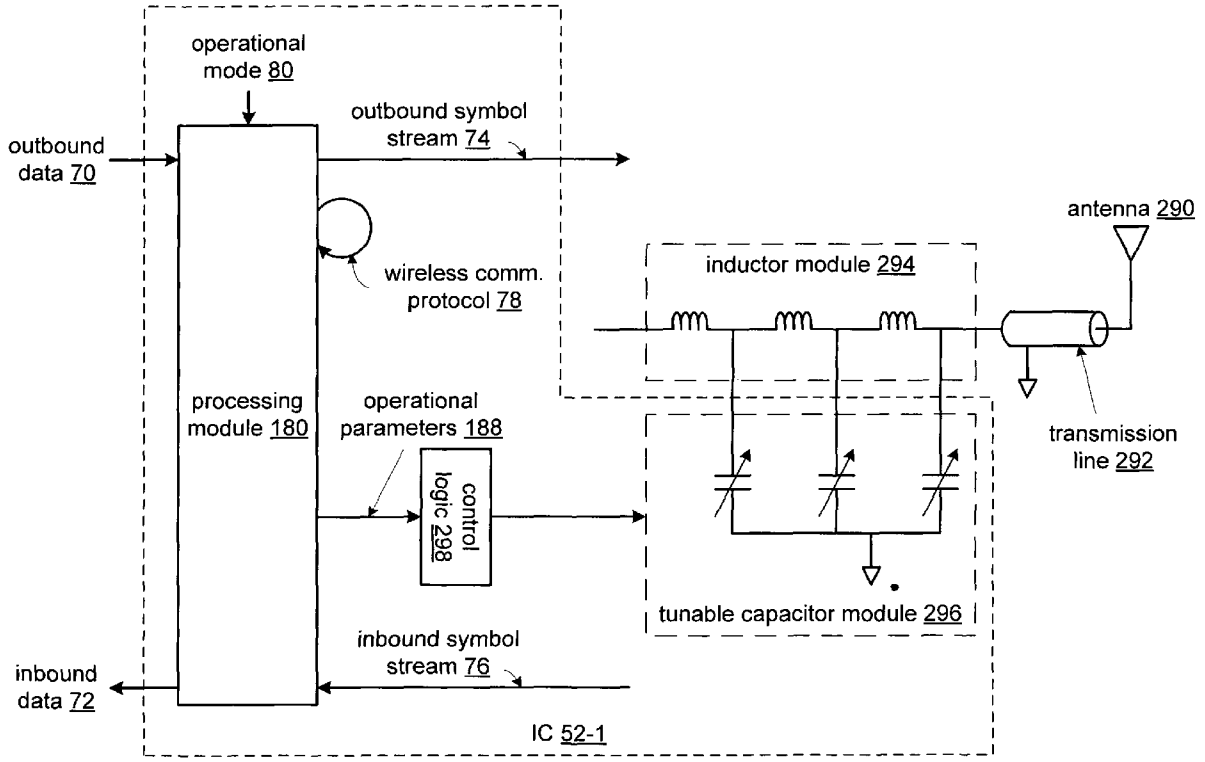

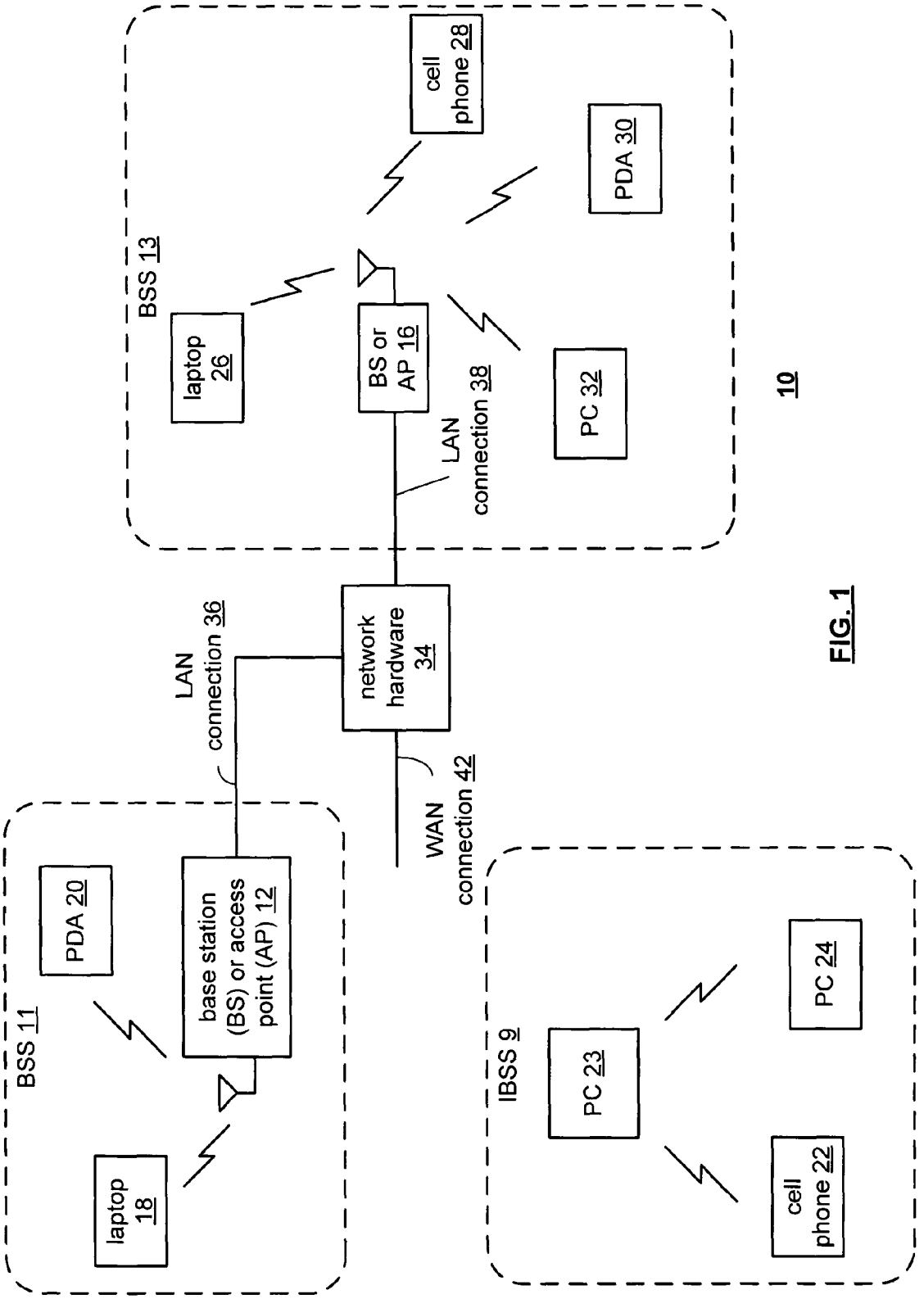
BSS 13
laptop 26
cell phone 28
BS or AP 16
PDA 30
PC 32
LAN connection 38
10
network hardware 34
LAN connection 36
WAN connection 42
BSS 11
PDA 20
base station (BS) or access point (AP) 12
laptop 18
IBSS 9
PC 23
PC 24
cell phone 22

FIG. 1

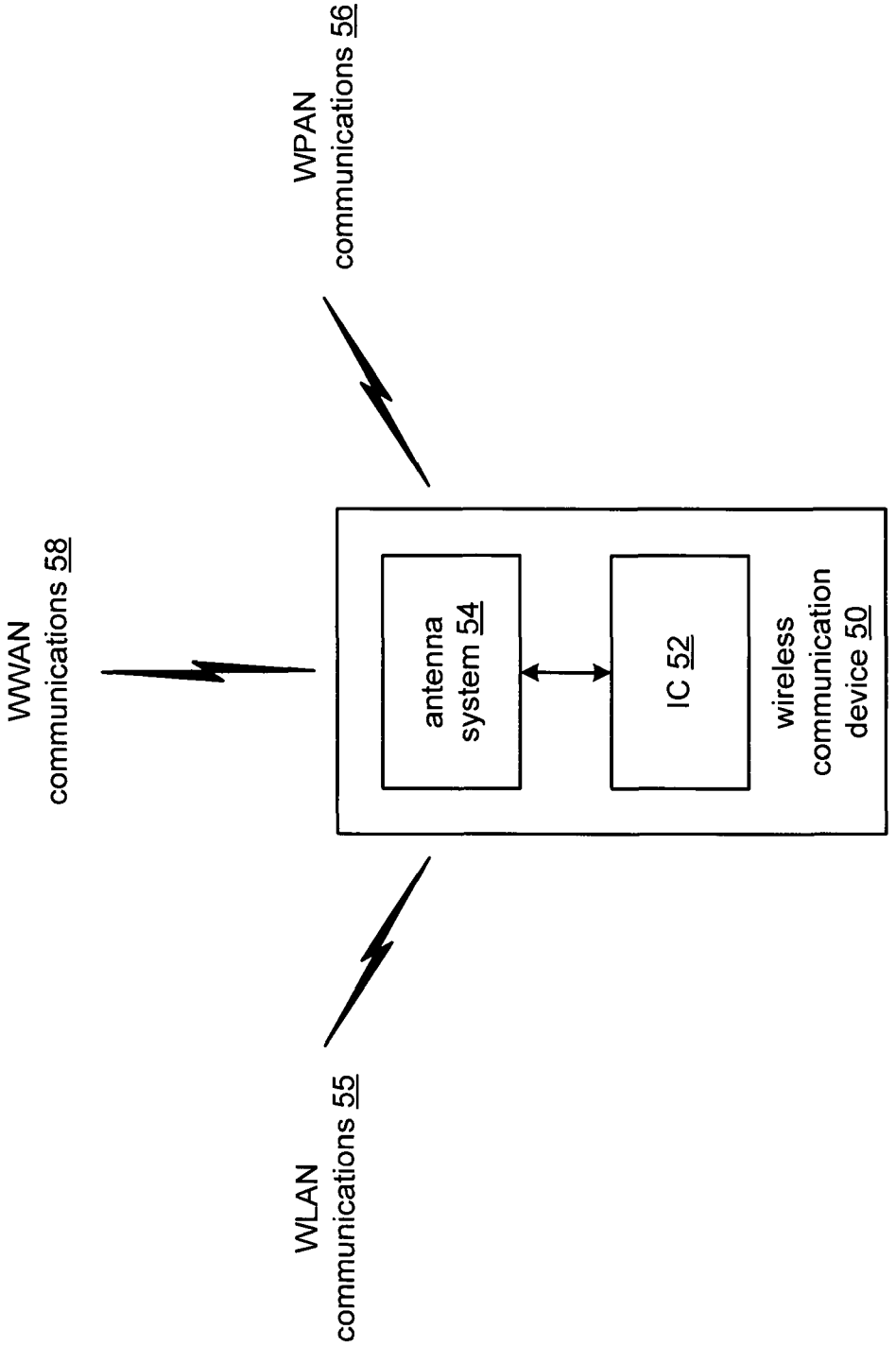
WPAN communications 56
WWAN communications 58
antenna system 54
IC 52
wireless communication device 50
WLAN communications 55

FIG. 2

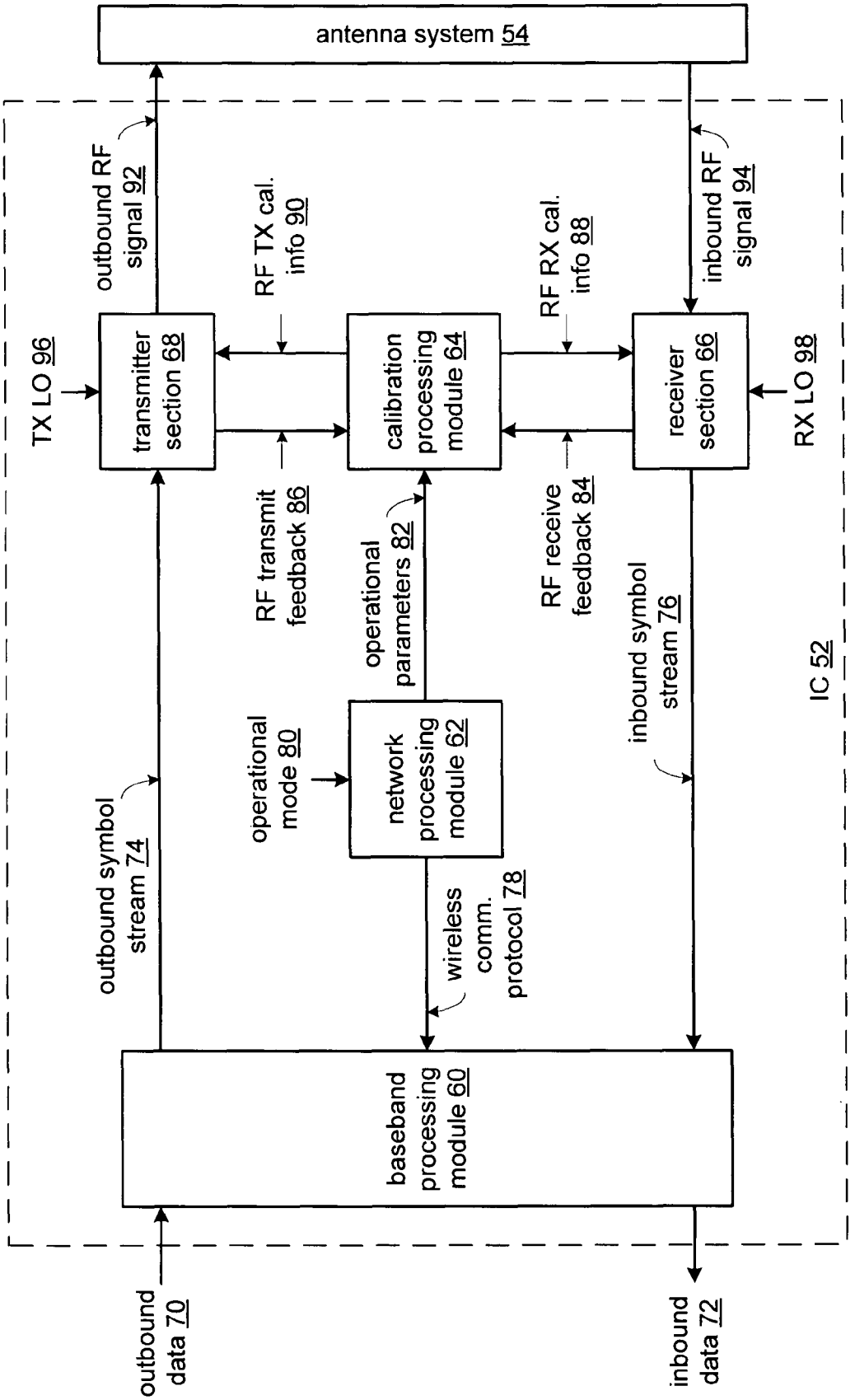
antenna system 54
outbound RF signal 92
inbound RF signal 94
TX LO 96
transmitter section 68
RF TX cal. info 90
calibration processing module 64
RF RX cal. info 88
receiver section 66
RX LO 98
RF transmit feedback 86
operational parameters 82
RF receive feedback 84
inbound symbol stream 76
IC 52
operational mode 80
network processing module 62
outbound symbol stream 74
wireless comm. protocol 78
baseband processing module 60
outbound data 70
inbound data 72

FIG. 3

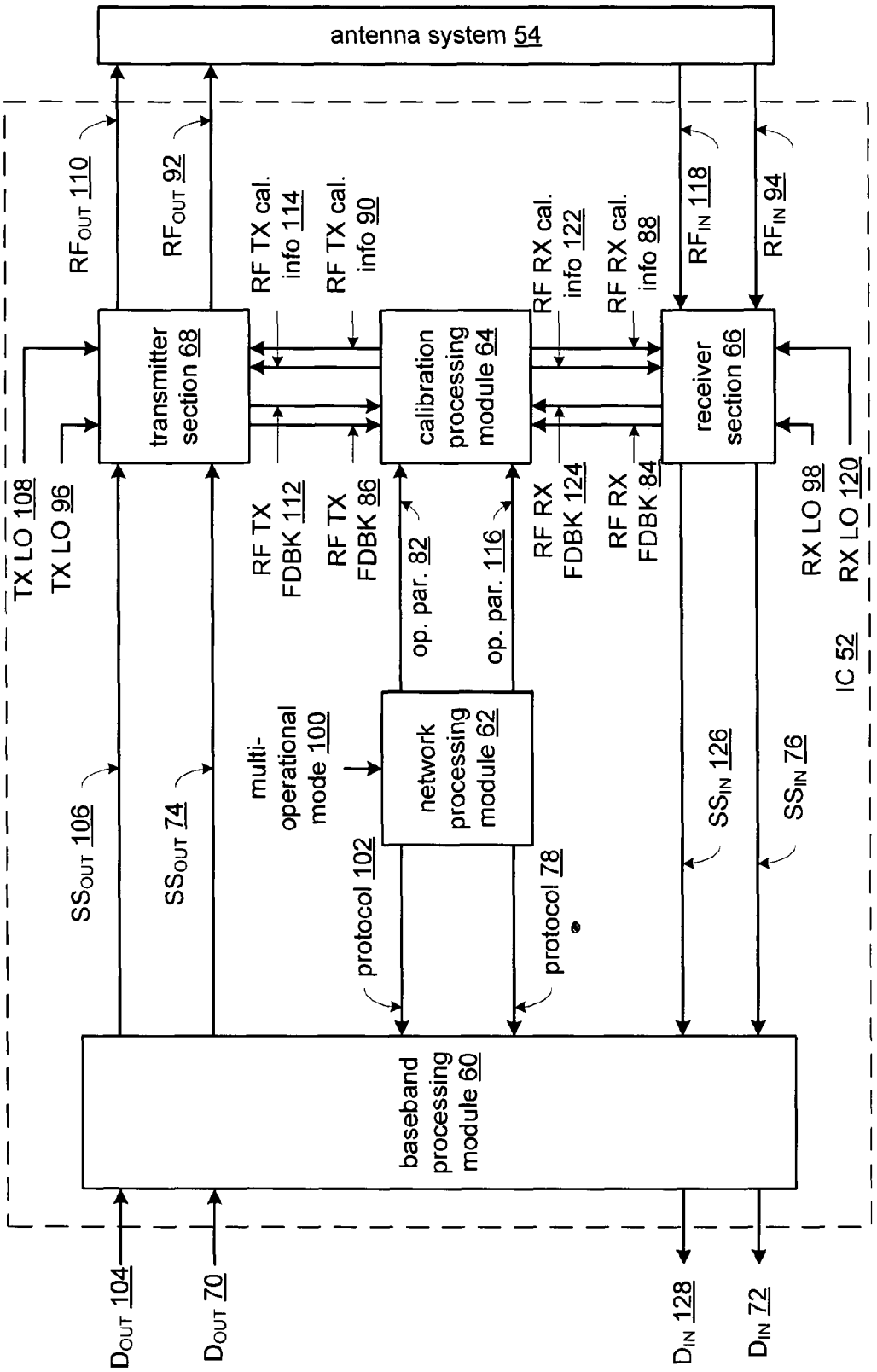
antenna system 54
RF$_{OUT}$ 110
RF$_{OUT}$ 92
RF TX cal. info 114
RF TX cal. info 90
RF RX cal. info 122
RF RX cal. info 88
RF$_{IN}$ 118
RF$_{IN}$ 94
transmitter section 68
calibration processing module 64
receiver section 66
TX LO 108
TX LO 96
RF TX FDBK 112
RF TX FDBK 86
op. par. 82
op. par. 116
RF RX FDBK 124
RF RX FDBK 84
RX LO 98
RX LO 120
IC 52
SS$_{OUT}$ 106
SS$_{OUT}$ 74
multi-operational mode 100
network processing module 62
protocol 102
protocol 78
SS$_{IN}$ 126
SS$_{IN}$ 76
baseband processing module 60
D$_{OUT}$ 104
D$_{OUT}$ 70
D$_{IN}$ 128
D$_{IN}$ 72

FIG. 4

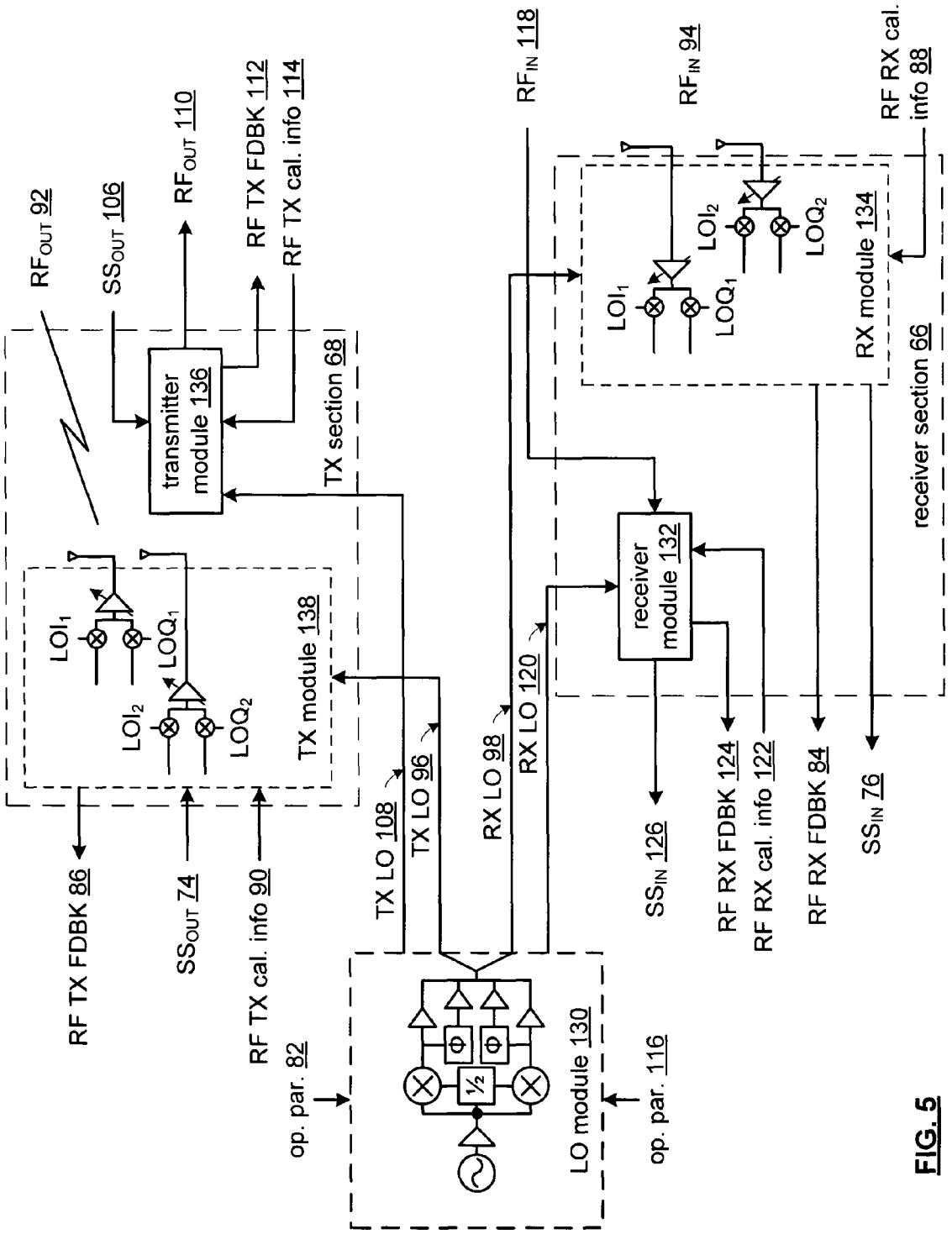
RF$_{OUT}$ 92
SS$_{OUT}$ 106
RF$_{OUT}$ 110
RF TX FDBK 112
RF TX cal. info 114
transmitter module 136
TX section 68
LOI$_1$
LOQ$_1$
LOI$_2$
LOQ$_2$
TX module 138
RF TX FDBK 86
SS$_{OUT}$ 74
RF TX cal. info 90
op. par. 82
TX LO 108
TX LO 96
RX LO 98
RX LO 120
RF$_{IN}$ 118
RF$_{IN}$ 94
RF RX cal. info 88
receiver module 132
RX module 134
receiver section 66
SS$_{IN}$ 126
RF RX FDBK 124
RF RX cal. info 122
RF RX FDBK 84
SS$_{IN}$ 76
½
LO module 130
op. par. 116

FIG. 5

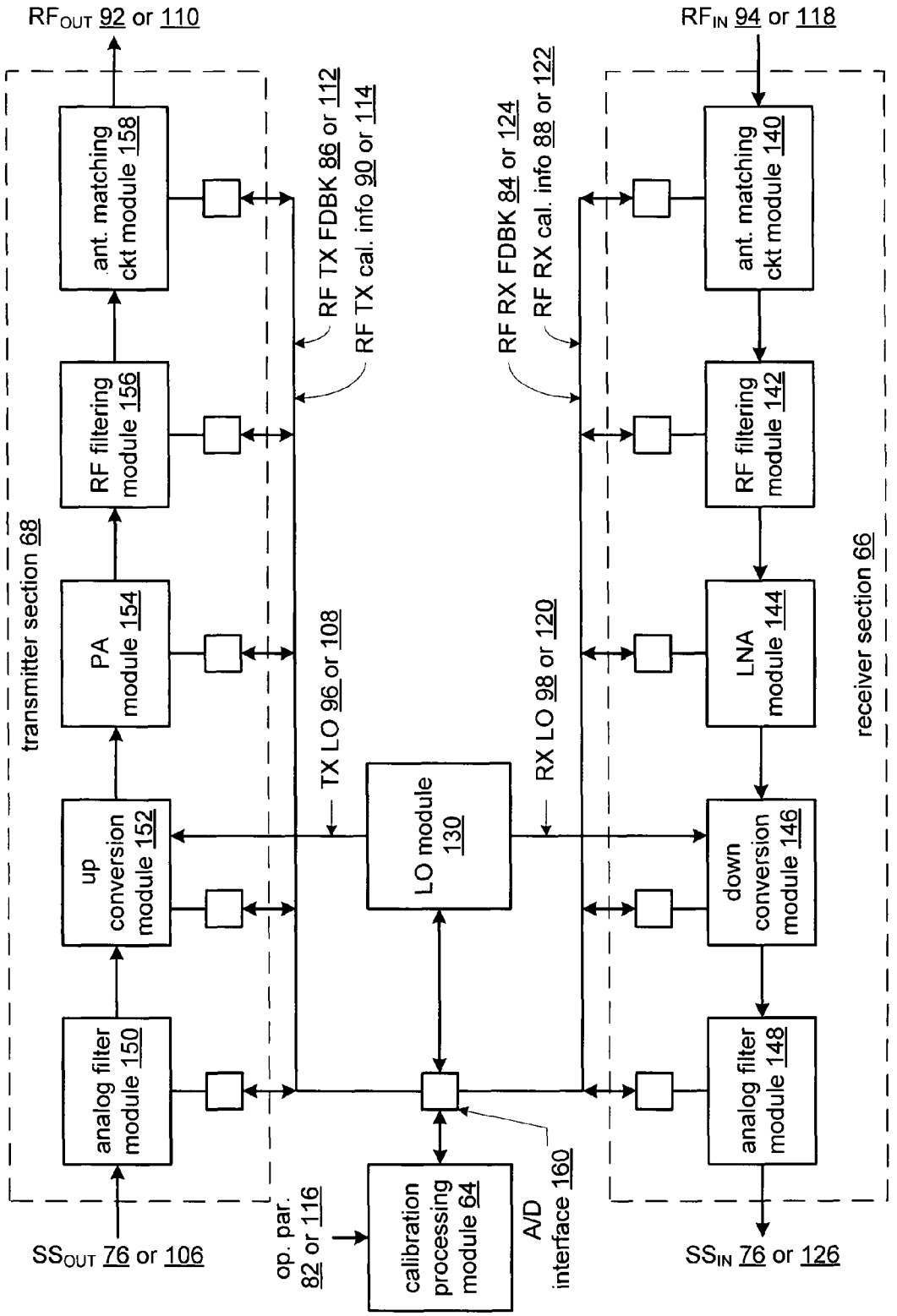
RF$_{OUT}$ 92 or 110
ant. matching ckt module 158
RF filtering module 156
PA module 154
up conversion module 152
analog filter module 150
transmitter section 68
SS$_{OUT}$ 76 or 106
RF TX FDBK 86 or 112
RF TX cal. info 90 or 114
TX LO 96 or 108
op. par. 82 or 116
calibration processing module 64
LO module 130
A/D interface 160
RF RX FDBK 84 or 124
RF RX cal. info 88 or 122
RX LO 98 or 120
RF$_{IN}$ 94 or 118
ant. matching ckt module 140
RF filtering module 142
LNA module 144
down conversion module 146
analog filter module 148
receiver section 66
SS$_{IN}$ 76 or 126

FIG. 6

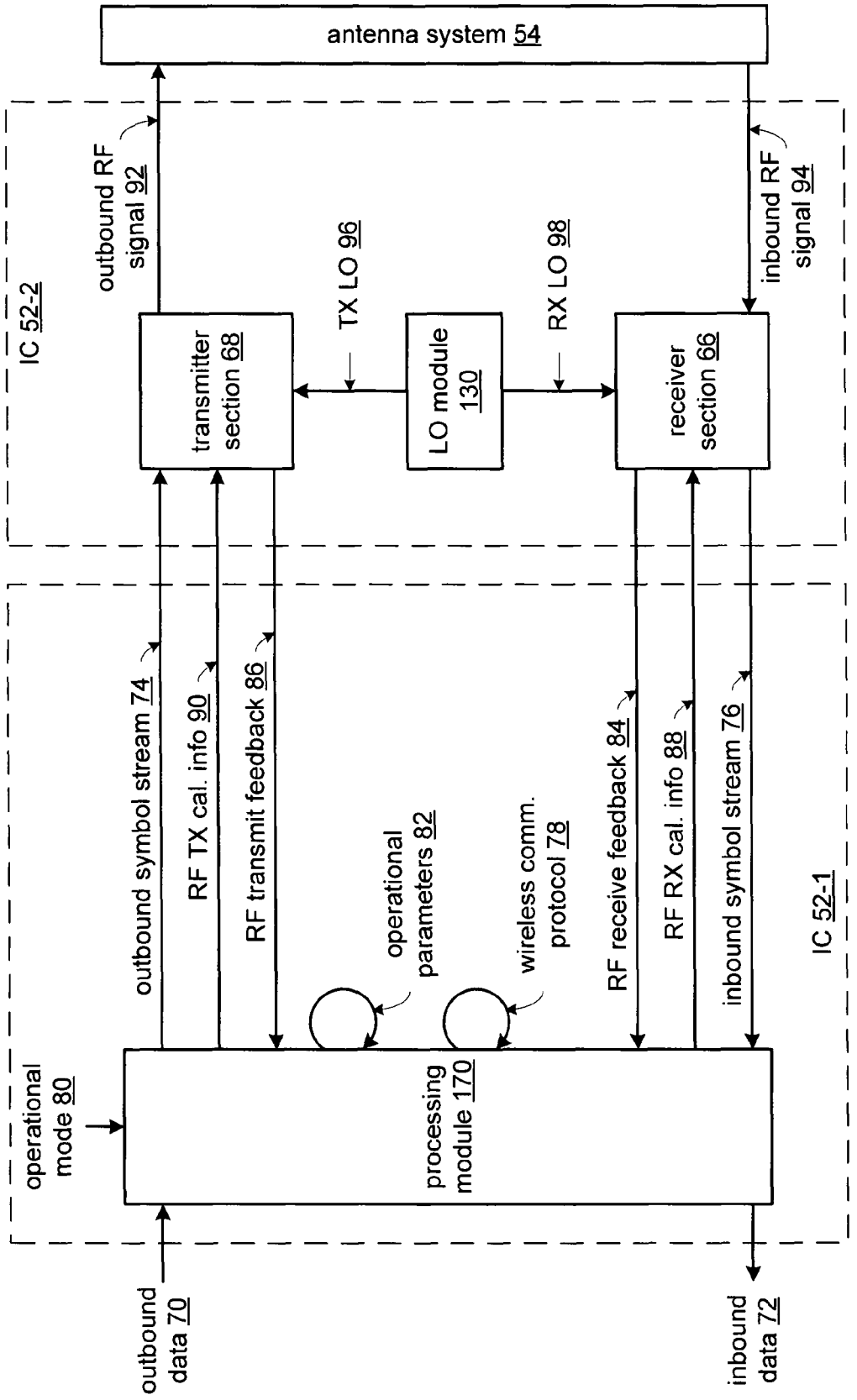
antenna system 54
outbound RF signal 92
inbound RF signal 94
IC 52-2
transmitter section 68
TX LO 96
LO module 130
RX LO 98
receiver section 66
outbound symbol stream 74
RF TX cal. info 90
RF transmit feedback 86
operational parameters 82
wireless comm. protocol 78
RF receive feedback 84
RF RX cal. info 88
inbound symbol stream 76
IC 52-1
operational mode 80
processing module 170
outbound data 70
inbound data 72

FIG. 7

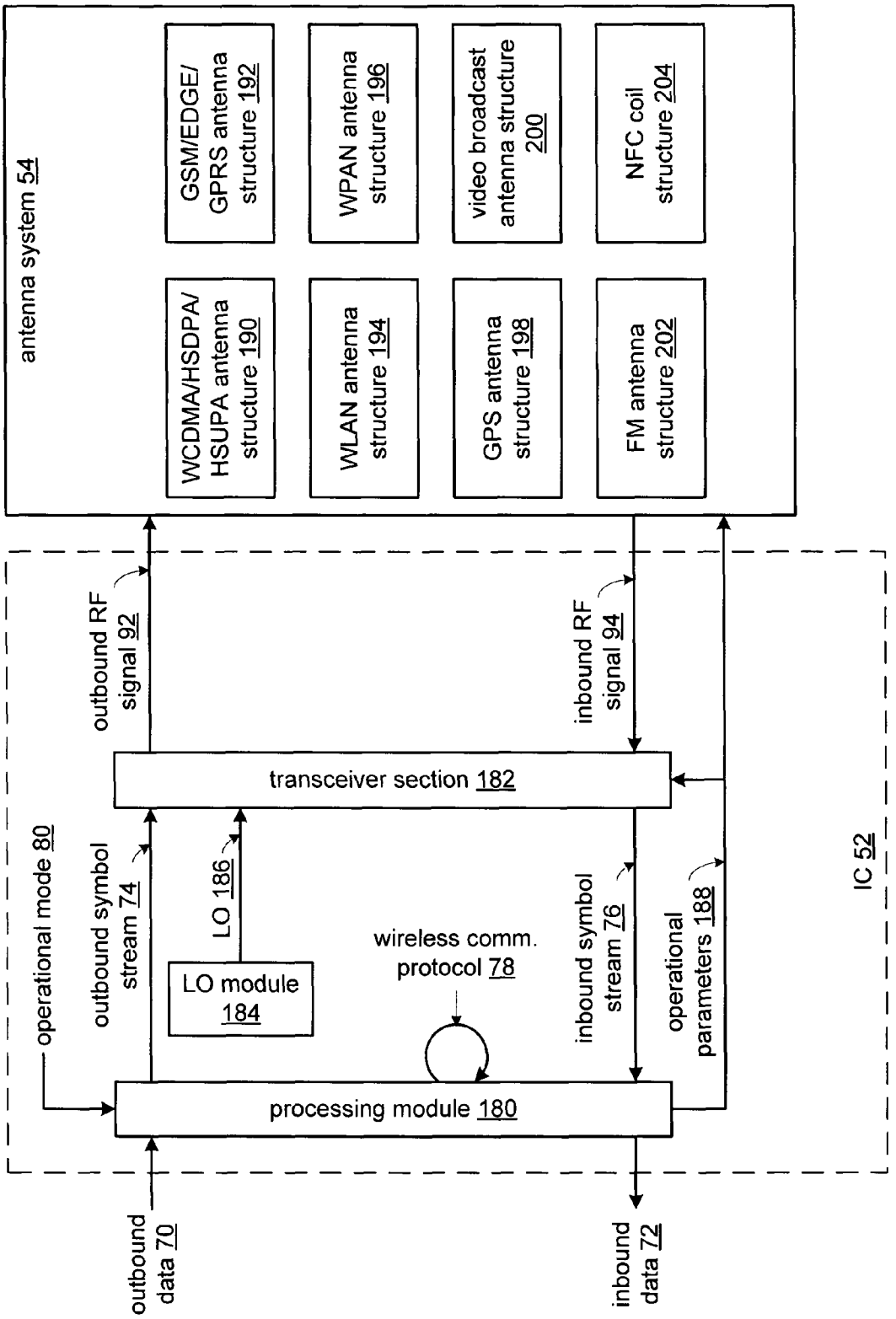
antenna system 54
WCDMA/HSDPA/ HSUPA antenna structure 190
GSM/EDGE/ GPRS antenna structure 192
WLAN antenna structure 194
WPAN antenna structure 196
GPS antenna structure 198
video broadcast antenna structure 200
FM antenna structure 202
NFC coil structure 204
outbound RF signal 92
inbound RF signal 94
transceiver section 182
operational mode 80
outbound symbol stream 74
LO 186
LO module 184
wireless comm. protocol 78
inbound symbol stream 76
operational parameters 188
processing module 180
IC 52
outbound data 70
inbound data 72

FIG. 8

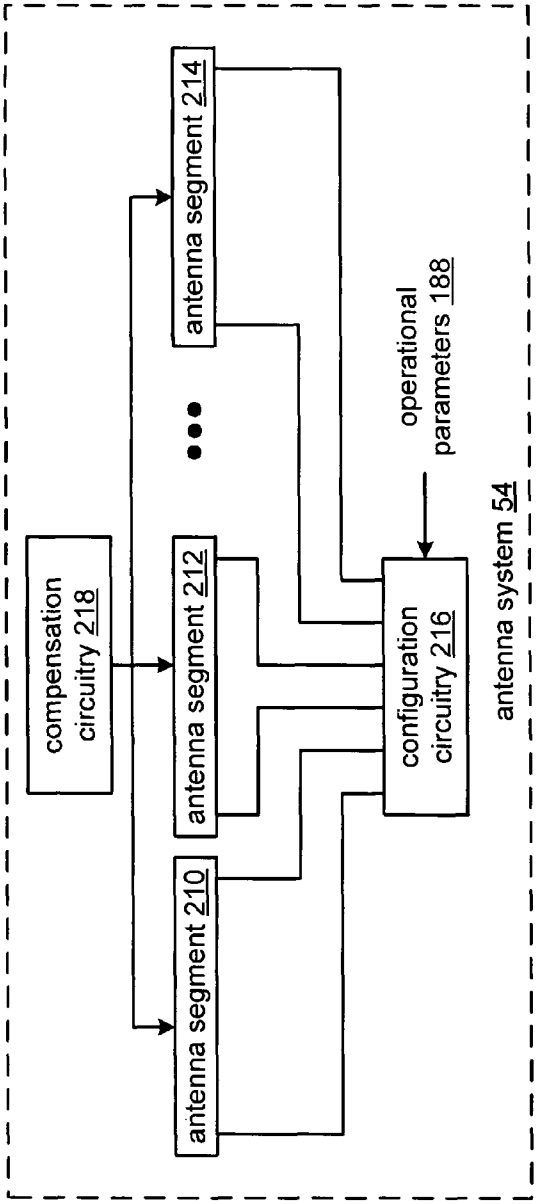

FIG. 9

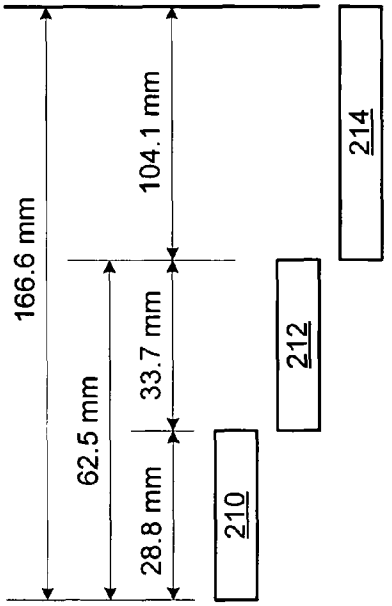

FIG. 11

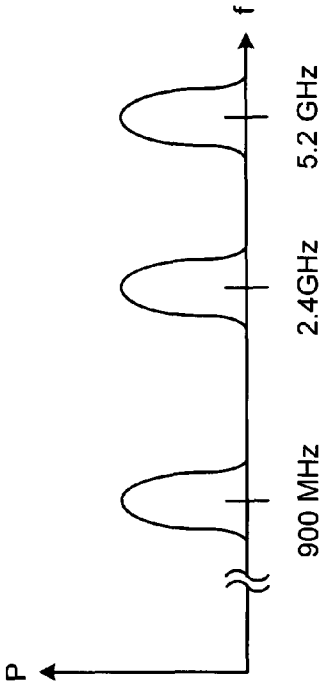

FIG. 10

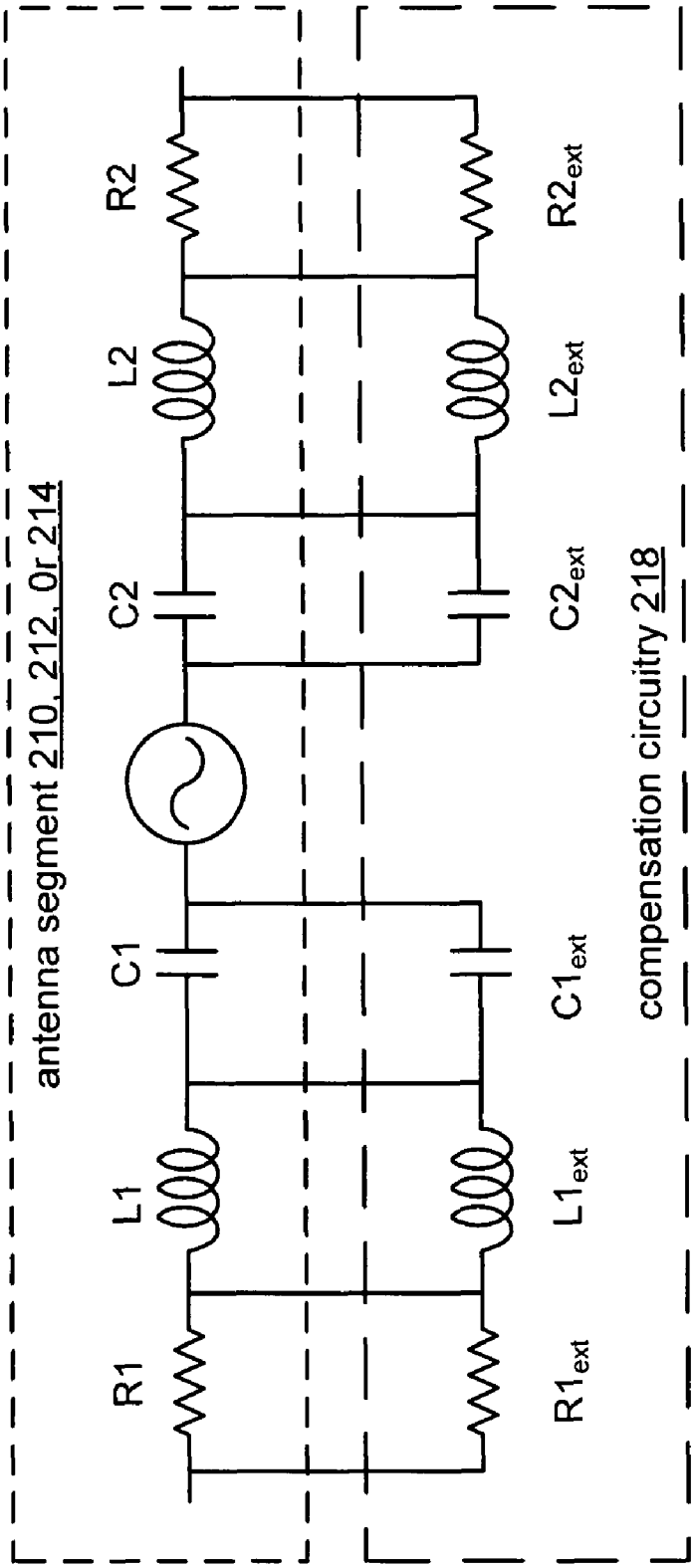
antenna segment 210, 212, 0r 214
R1
L1
C1
C2
L2
R2
R1ext
L1ext
C1ext
C2ext
L2ext
R2ext
compensation circuitry 218

FIG. 12

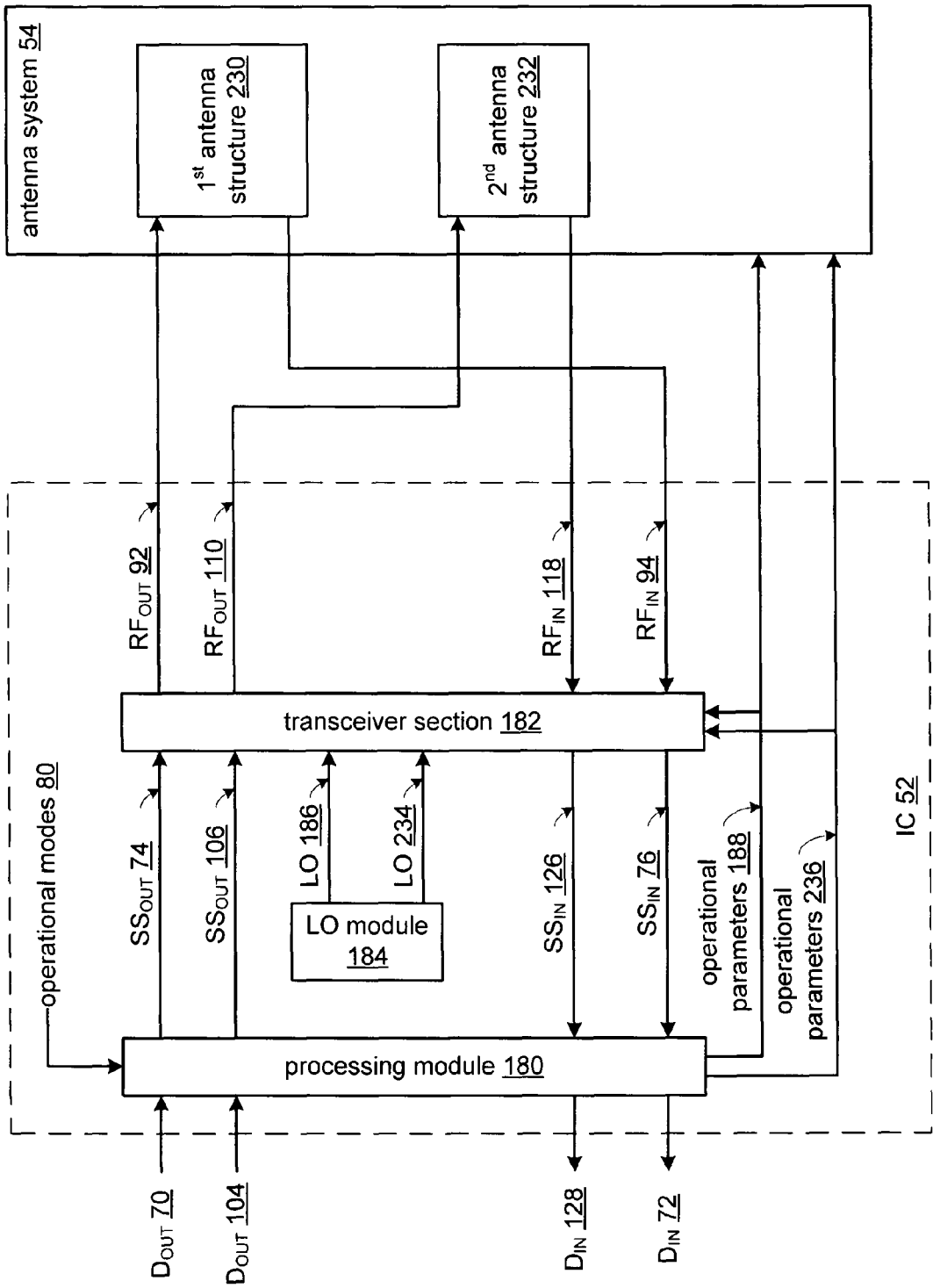
antenna system 54
1st antenna structure 230
2nd antenna structure 232
RFOUT 92
RFOUT 110
RFIN 118
RFIN 94
transceiver section 182
operational modes 80
SSOUT 74
SSOUT 106
LO 186
LO 234
LO module 184
SSIN 126
SSIN 76
operational parameters 188
operational parameters 236
IC 52
processing module 180
DOUT 70
DOUT 104
DIN 128
DIN 72

FIG. 13

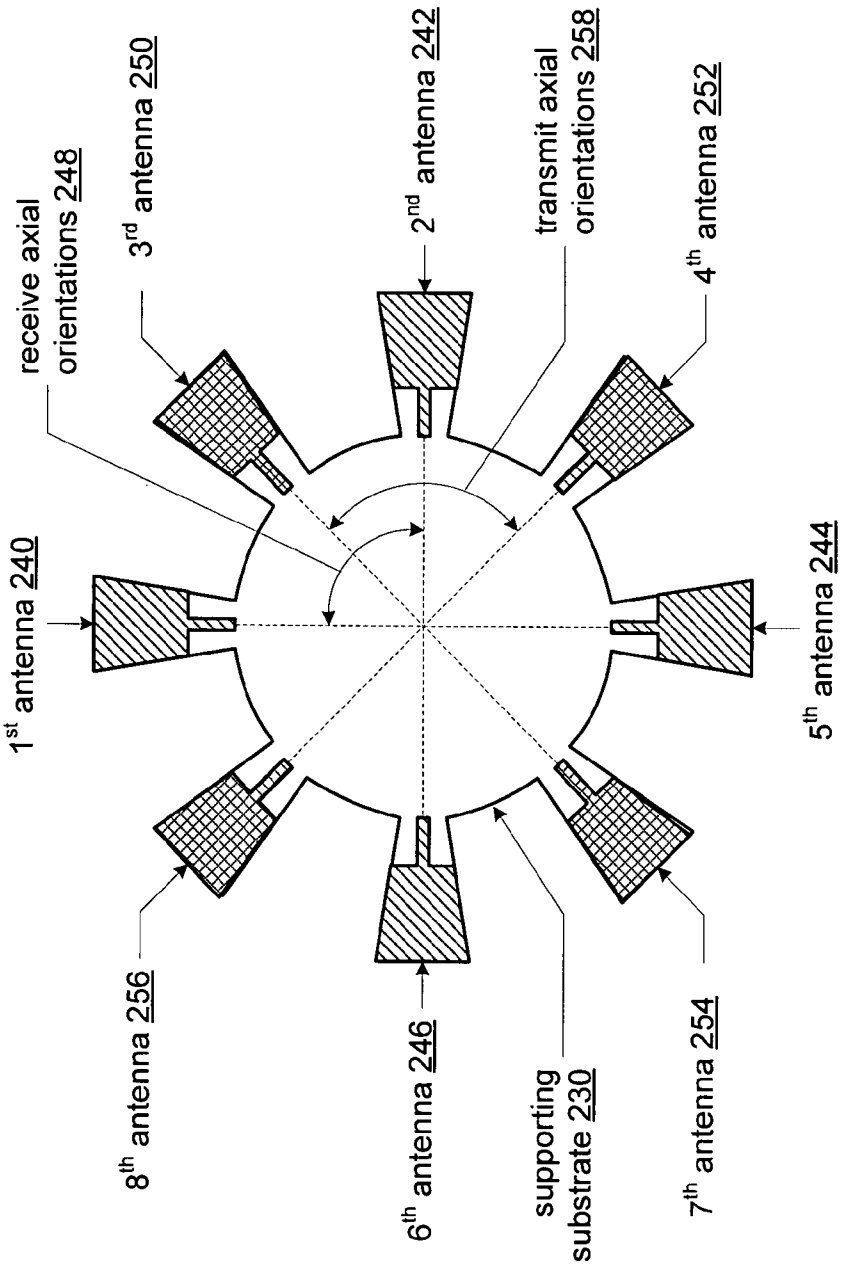
receive axial orientations 248
3rd antenna 250
2nd antenna 242
transmit axial orientations 258
4th antenna 252
1st antenna 240
5th antenna 244
8th antenna 256
6th antenna 246
supporting substrate 230
7th antenna 254

FIG. 14

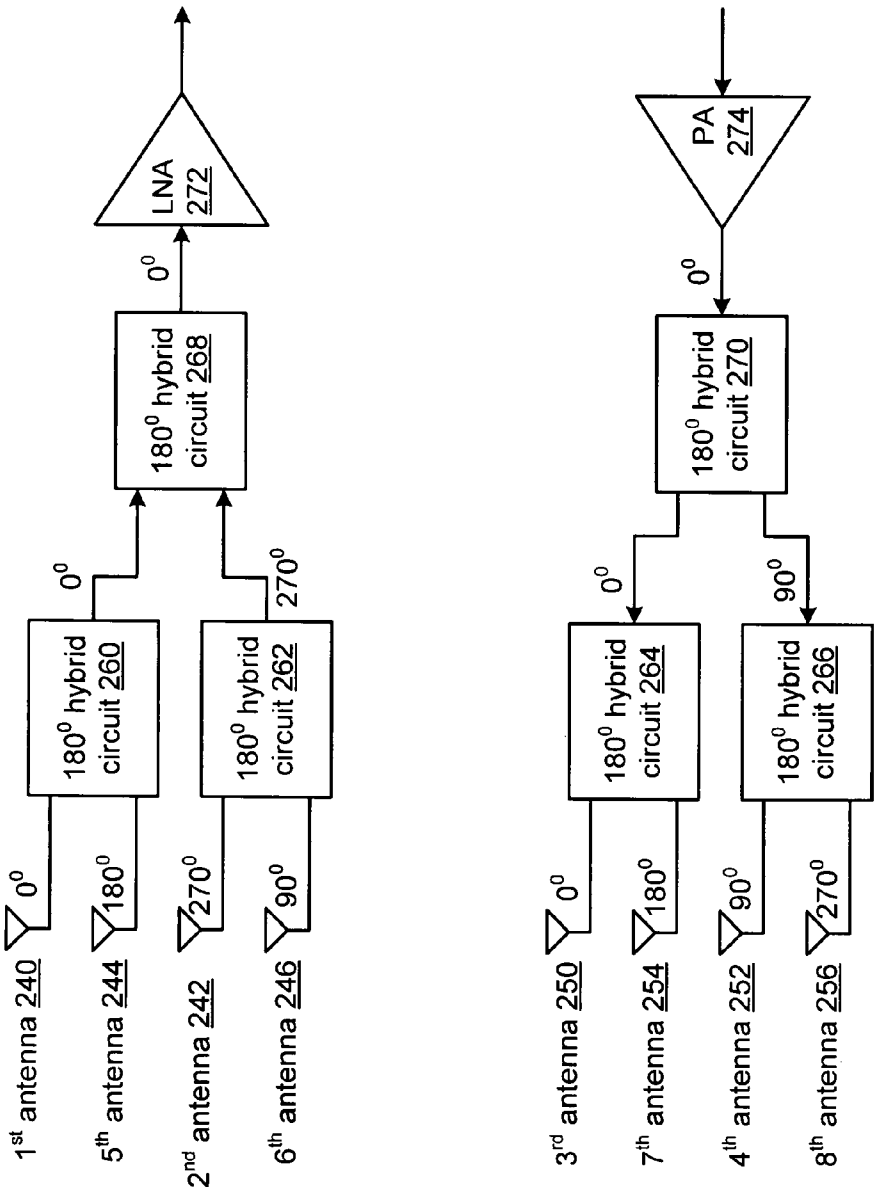
1st antenna 240
5th antenna 244
2nd antenna 242
6th antenna 246
0°
180°
270°
90°
180° hybrid circuit 260
180° hybrid circuit 262
0°
270°
180° hybrid circuit 268
0°
LNA 272
3rd antenna 250
7th antenna 254
4th antenna 252
8th antenna 256
0°
180°
90°
270°
180° hybrid circuit 264
180° hybrid circuit 266
0°
90°
180° hybrid circuit 270
0°
PA 274

FIG. 15

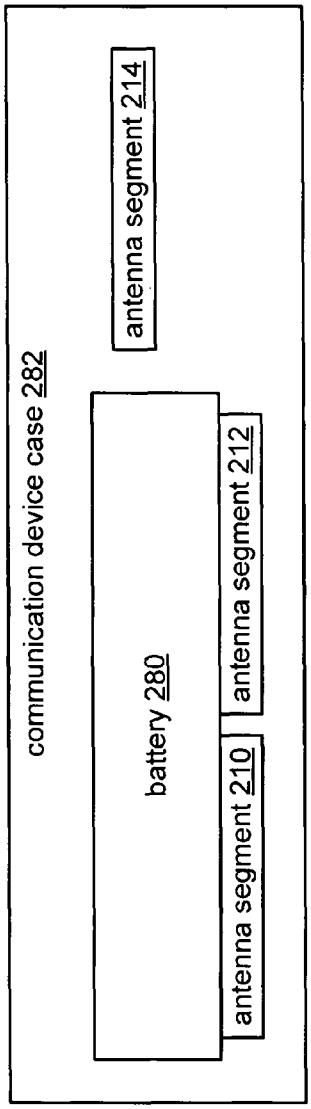
communication device case 282
battery 280
antenna segment 210
antenna segment 212
antenna segment 214

FIG. 16

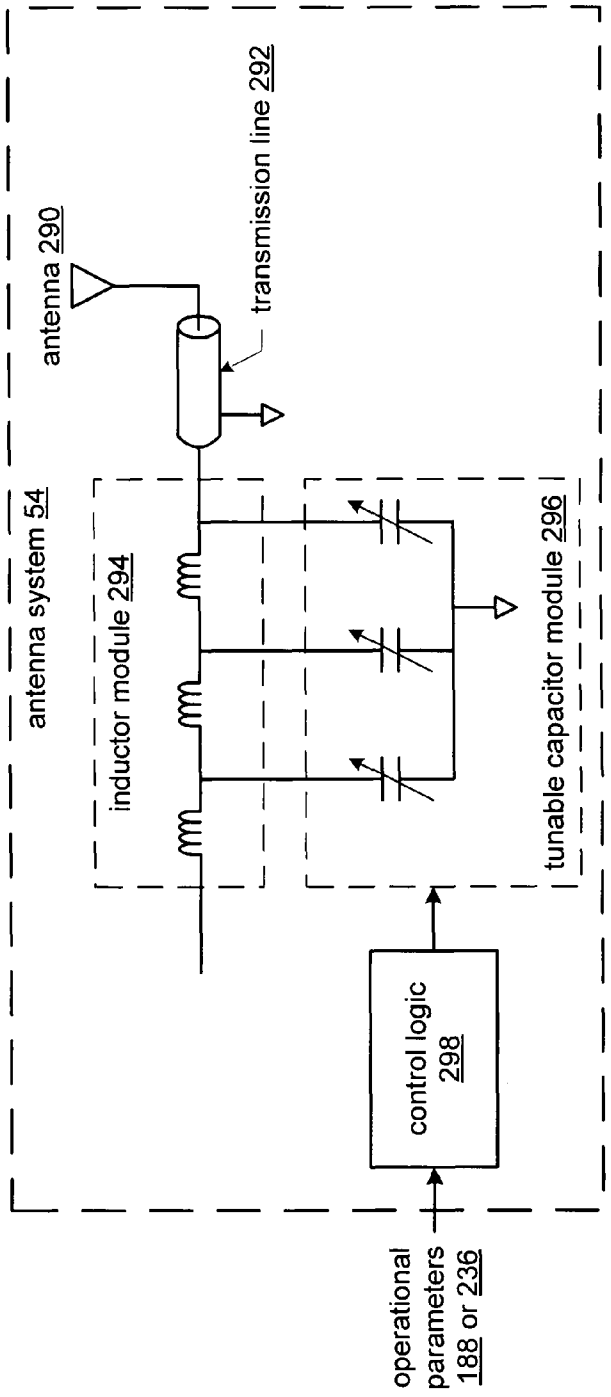
antenna system 54
antenna 290
transmission line 292
inductor module 294
tunable capacitor module 296
control logic 298
operational parameters 188 or 236

FIG. 17

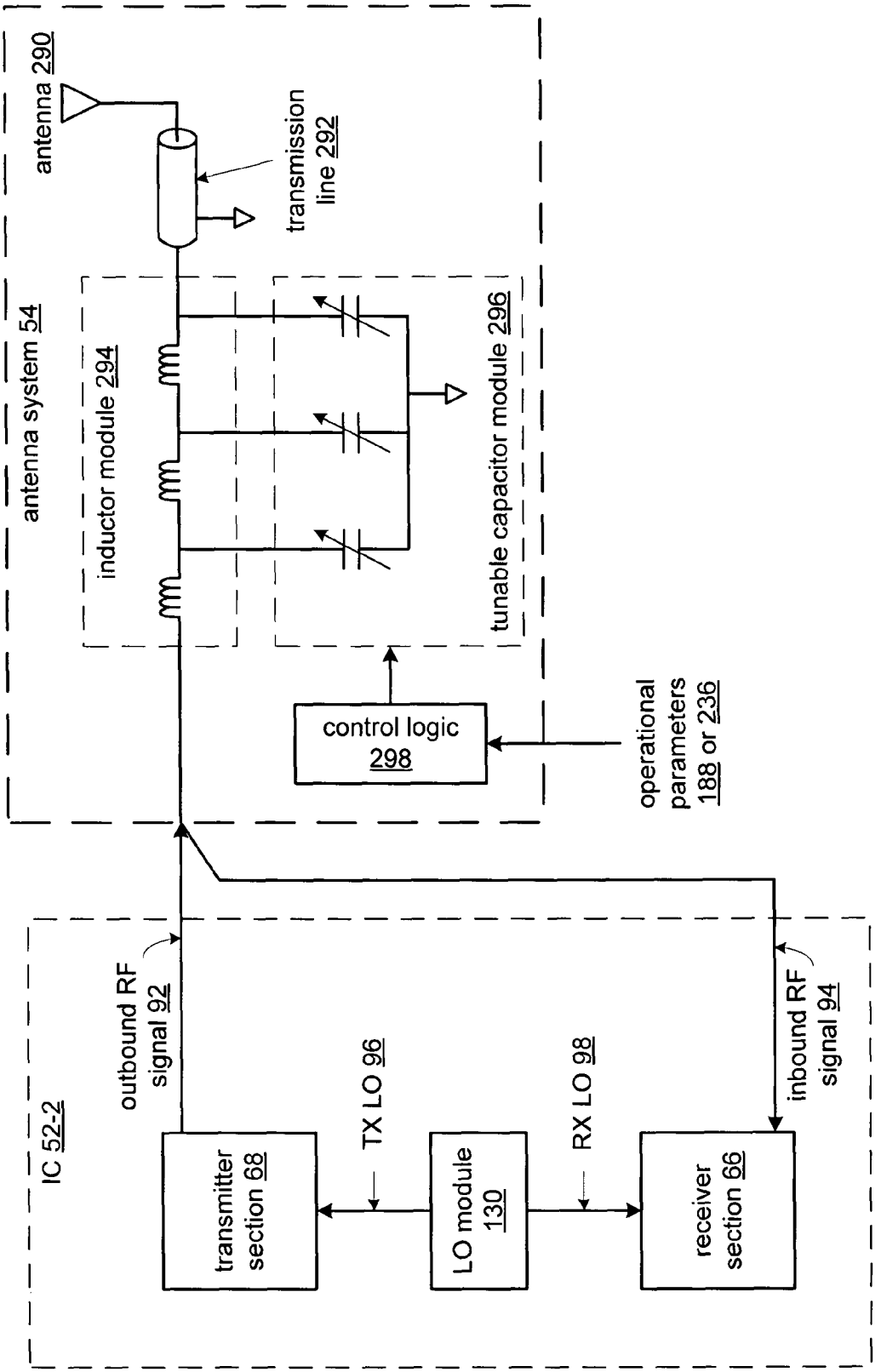
antenna 290
transmission line 292
antenna system 54
inductor module 294
tunable capacitor module 296
control logic 298
operational parameters 188 or 236
IC 52-2
outbound RF signal 92
inbound RF signal 94
TX LO 96
RX LO 98
transmitter section 68
LO module 130
receiver section 66

FIG. 18

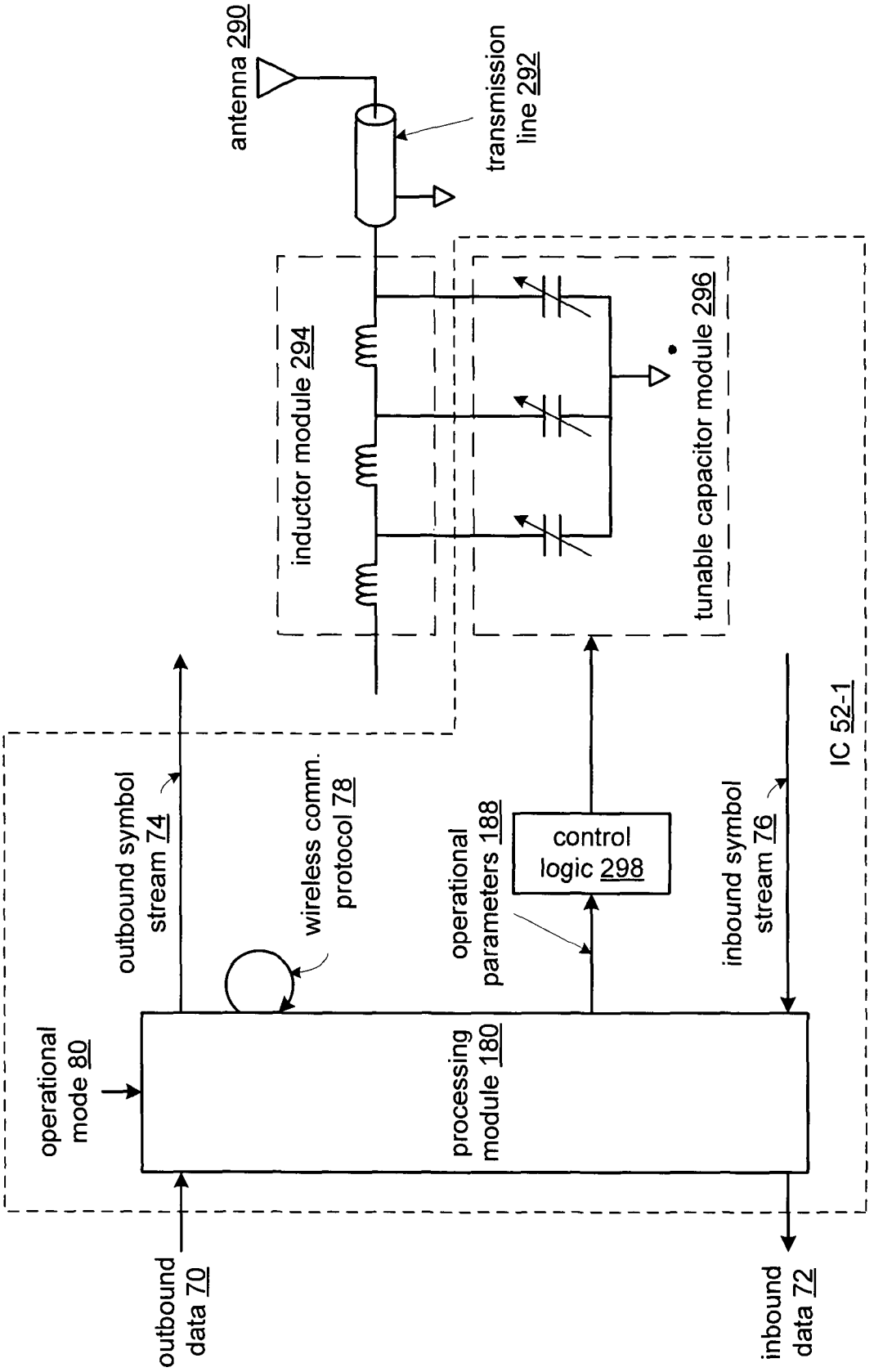
antenna 290
transmission line 292
inductor module 294
tunable capacitor module 296
IC 52-1
outbound symbol stream 74
wireless comm. protocol 78
operational parameters 188
control logic 298
inbound symbol stream 76
operational mode 80
processing module 180
outbound data 70
inbound data 72

FIG. 19

ANTENNA SYSTEM FOR USE WITHIN A WIRELESS COMMUNICATION DEVICE

This patent application is claiming priority under 35 USC §119 to a provisionally filed patent application entitled ANTENNA SYSTEM FOR USE WITHIN A WIRELESS COMMUNICATION DEVICE, having a provisional filing date of Mar. 14, 2007, and a provisional Ser. No. 60/906,987.

CROSS REFERENCE TO RELATED PATENTS

Not Applicable

STATEMENT REGARDING FEDERALLY SPONSORED RESEARCH OR DEVELOPMENT

Not Applicable

INCORPORATION-BY-REFERENCE OF MATERIAL SUBMITTED ON A COMPACT DISC

Not Applicable

BACKGROUND OF THE INVENTION

1. Technical Field of the Invention

This invention relates generally to wireless communication systems and more particularly to wireless communication devices having an integrated circuit operating within such systems.

2. Description of Related Art

Communication systems are known to support wireless and wire lined communications between wireless and/or wire lined communication devices. Such communication systems range from national and/or international cellular telephone systems to the Internet to point-to-point in-home wireless networks. Each type of communication system is constructed, and hence operates, in accordance with one or more communication standards. For instance, wireless communication systems may operate in accordance with one or more standards including, but not limited to, IEEE 802.11, Bluetooth, advanced mobile phone services (AMPS), digital AMPS, global system for mobile communications (GSM), code division multiple access (CDMA), local multi-point distribution systems (LMDS), multi-channel-multi-point distribution systems (MMDS), radio frequency identification (RFID), Enhanced Data rates for GSM Evolution (EDGE), General Packet Radio Service (GPRS), and/or variations thereof.

Depending on the type of wireless communication system, a wireless communication device, such as a cellular telephone, two-way radio, personal digital assistant (PDA), personal computer (PC), laptop computer, home entertainment equipment, RFID reader, RFID tag, et cetera communicates directly or indirectly with other wireless communication devices. For direct communications (also known as point-to-point communications), the participating wireless communication devices tune their receivers and transmitters to the same channel or channels (e.g., one of the plurality of radio frequency (RF) carriers of the wireless communication system or a particular RF frequency for some systems) and communicate over that channel(s). For indirect wireless communications, each wireless communication device communicates directly with an associated base station (e.g., for cellular services) and/or an associated access point (e.g., for an in-home or in-building wireless network) via an assigned channel. To complete a communication connection between

the wireless communication devices, the associated base stations and/or associated access points communicate with each other directly, via a system controller, via the public switch telephone network, via the Internet, and/or via some other wide area network.

For each wireless communication device to participate in wireless communications, it includes a built-in radio transceiver (i.e., receiver and transmitter) or is coupled to an associated radio transceiver (e.g., a station for in-home and/or in-building wireless communication networks, RF modem, etc.). As is known, the receiver is coupled to an antenna and includes a low noise amplifier, one or more intermediate frequency stages, a filtering stage, and a data recovery stage. The low noise amplifier receives inbound RF signals via the antenna and amplifies then. The one or more intermediate frequency stages mix the amplified RF signals with one or more local oscillations to convert the amplified RF signal into baseband signals or intermediate frequency (IF) signals. The filtering stage filters the baseband signals or the IF signals to attenuate unwanted out of band signals to produce filtered signals. The data recovery stage recovers raw data from the filtered signals in accordance with the particular wireless communication standard.

As is also known, the transmitter includes a data modulation stage, one or more intermediate frequency stages, and a power amplifier. The data modulation stage converts raw data into baseband signals in accordance with a particular wireless communication standard. The one or more intermediate frequency stages mix the baseband signals with one or more local oscillations to produce RF signals. The power amplifier amplifies the RF signals prior to transmission via an antenna.

While transmitters generally include a data modulation stage, one or more IF stages, and a power amplifier, the particular implementation of these elements is dependent upon the data modulation scheme of the standard being supported by the transceiver. For example, if the baseband modulation scheme is Gaussian Minimum Shift Keying (GMSK), the data modulation stage functions to convert digital words into quadrature modulation symbols, which have a constant amplitude and varying phases. The IF stage includes a phase locked loop (PLL) that generates an oscillation at a desired RF frequency, which is modulated based on the varying phases produced by the data modulation stage. The phase modulated RF signal is then amplified by the power amplifier in accordance with a transmit power level setting to produce a phase modulated RF signal.

As another example, if the data modulation scheme is 8-PSK (phase shift keying), the data modulation stage functions to convert digital words into symbols having varying amplitudes and varying phases. The IF stage includes a phase locked loop (PLL) that generates an oscillation at a desired RF frequency, which is modulated based on the varying phases produced by the data modulation stage. The phase modulated RF signal is then amplified by the power amplifier in accordance with the varying amplitudes to produce a phase and amplitude modulated RF signal.

As yet another example, if the data modulation scheme is x-QAM (16, 64, 128, 256 quadrature amplitude modulation), the data modulation stage functions to convert digital words into Cartesian coordinate symbols (e.g., having an in-phase signal component and a quadrature signal component). The IF stage includes mixers that mix the in-phase signal component with an in-phase local oscillation and mix the quadrature signal component with a quadrature local oscillation to produce two mixed signals. The mixed signals are summed together and filtered to produce an RF signal that is subsequently amplified by a power amplifier.

As a further example, the resulting RF signal has different, carrier frequencies in different frequency bands depending on the standard being supported by the transceiver. For instance, a GSM, EDGE, or GPRS compliant transceiver uses a 900 MHz, 180° MHz, and/or 1900 MHz frequency band; a WCMA compliant transceiver uses a 1900 MHz and 2100 MHz frequency band; an IEEE 802.11 compliant transceiver uses a 2.4 GHz or 5 GHz frequency band; and a Bluetooth compliant transceiver uses a 2.4 GHz frequency band. As such, the local oscillation, the mixers of the transmit and receive IF stages, the low noise amplifier, the power amplifier, and the RF filtering are designed to operating within a specific frequency band.

As the desire for wireless communication devices to support multiple standards continues, recent trends include the desire to integrate more functions on to a single chip. However, such desires have gone unrealized when it comes to implementing baseband and RF on the same chip for multiple wireless communication standards.

Therefore, a need exists for an integrated circuit (IC) that implements baseband and RF of multiple wireless communication standards on the same IC die.

BRIEF SUMMARY OF THE INVENTION

The present invention is directed to apparatus and methods of operation that are further described in the following Brief Description of the Drawings, the Detailed Description of the Invention, and the claims. Other features and advantages of the present invention will become apparent from the following detailed description of the invention made with reference to the accompanying drawings.

BRIEF DESCRIPTION OF THE SEVERAL VIEWS OF THE DRAWING(S)

FIG. **1** is a schematic block diagram of an embodiment of a wireless communication system in accordance with the present invention;

FIG. **2** is a schematic block diagram of an embodiment of a wireless communication device in accordance with the present invention;

FIG. **3** is a schematic block diagram of another embodiment of a wireless communication device in accordance with the present invention;

FIG. **4** is a schematic block diagram of another embodiment of a wireless communication device in accordance with the present invention;

FIG. **5** is a schematic block diagram of an embodiment of a local oscillation module, a transmitter section, and a receiver section in accordance with the present invention;

FIG. **6** is a schematic block diagram of another embodiment of a local oscillation module, a transmitter section, and a receiver section coupled to a calibration processing module in accordance with the present invention;

FIG. **7** is a schematic block diagram of another embodiment of a wireless communication device in accordance with the present invention;

FIG. **8** is a schematic block diagram of another embodiment of a wireless communication device in accordance with the present invention;

FIG. **9** is a schematic block diagram of an embodiment of an antenna system in accordance with the present invention;

FIG. **10** is a diagram of example frequency bands of an antenna system in accordance with the present invention;

FIG. **11** is a diagram of an embodiment of an antenna system in accordance with the present invention;

FIG. **12** is a schematic block diagram of another embodiment of an antenna system in accordance with the present invention;

FIG. **13** is a schematic block diagram of another embodiment of a wireless communication device in accordance with the present invention;

FIG. **14** is a diagram of another embodiment of an antenna system in accordance with the present invention;

FIG. **15** is a schematic block diagram of another embodiment of an antenna system in accordance with the present invention;

FIG. **16** is a diagram of an embodiment of a wireless communication device in accordance with the present invention;

FIG. **17** is a schematic block diagram of another embodiment of an antenna system in accordance with the present invention;

FIG. **18** is a schematic block diagram of another embodiment of a wireless communication device in accordance with the present invention; and

FIG. **19** is a schematic block diagram of another embodiment of a wireless communication device in accordance with the present invention.

DETAILED DESCRIPTION OF THE INVENTION

FIG. **1** is a schematic block diagram illustrating a communication system **10** that includes a plurality of base stations and/or access points **12**, **16**, a plurality of wireless communication devices **18-32** and a network hardware component **34**. Note that the network hardware **34**, which may be a router, switch, bridge, modem, system controller, et cetera provides a wide area network connection **42** for the communication system **10**. Further note that the wireless communication devices **18-32** may be laptop host computers **18** and **26**, personal digital assistant hosts **20** and **30**, personal computer hosts **24** and **32** and/or cellular telephone hosts **22** and **28**. The details of the wireless communication devices will be described in greater detail with reference to FIGS. **2-13**.

Wireless communication devices **22**, **23**, and **24** are located within an independent basic service set (IBSS) area and communicate directly (i.e., point to point). In this configuration, these devices **22**, **23**, and **24** may only communicate with each other. To communicate with other wireless communication devices within the system **10** or to communicate outside of the system **10**, the devices **22**, **23**, and/or **24** need to affiliate with one of the base stations or access points **12** or **16**.

The base stations or access points **12**, **16** are located within basic service set (BSS) areas **11** and **13**, respectively, and are operably coupled to the network hardware **34** via local area network connections **36**, **38**. Such a connection provides the base station or access point **12** **16** with connectivity to other devices within the system **10** and provides connectivity to other networks via the WAN connection **42**. To communicate with the wireless communication devices within its BSS **11** or **13**, each of the base stations or access points **12-16** has an associated antenna or antenna array. For instance, base station or access point **12** wirelessly communicates with wireless communication devices **18** and **20** while base station or access point **16** wirelessly communicates with wireless communication devices **26-32**. Typically, the wireless communication devices register with a particular base station or access point **12**, **16** to receive services from the communication system **10**.

Typically, base stations are used for cellular telephone systems (e.g., advanced mobile phone services (AMPS), digital AMPS, global system for mobile communications (GSM),

code division multiple access (CDMA), local multi-point distribution systems (LMDS), multi-channel-multi-point distribution systems (MMDS), Enhanced Data rates for GSM Evolution (EDGE), General Packet Radio Service (GPRS), high-speed downlink packet access (HSDPA), high-speed uplink packet access (HSUPA and/or variations thereof) and like-type systems, while access points are used for in-home or in-building wireless networks (e.g., IEEE 802.11, Bluetooth, ZigBee, any other type of radio frequency based network protocol and/or variations thereof). Regardless of the particular type of communication system, each wireless communication device includes a built-in radio and/or is coupled to a radio.

FIG. **2** is a schematic block diagram of an embodiment of a wireless communication device **50** that includes an integrated circuit **52** and an antenna system **54**. The communication device **50** may be one of the communication devices **18-32** of FIG. **1** or another type of portable device that provides wireless services. In this embodiment, the wireless communication device **50** supports one or more of wireless local area network (WLAN) communications **55**, wireless personal area network (WPAN) communications **56**, and wireless wide area network (WWAN) communications **58**.

The WLAN communications **55** may be in accordance with past, present, or future versions of IEEE 802.11 (e.g., 802.11a, b, g, n, etc.). In addition, the WLAN communications **55** may be in accordance with a far field communication (FFC) protocol as may be used in an RFID system. For example, the wireless communication device **50** may include an RFID reader that communicates with RFID tags within its coverage area via an RF signal having a carrier frequency at 13 MHz, 900 MHz, etc., using a back-scattering technique. Alternatively, the wireless communication device **50** may included an RFID tag.

The WPAN communications **56** may be in accordance with past, present, or future versions of Bluetooth, ZigBee, and/or IEEE 802.15x (e.g., IEEE 802.15.1, .2, .3, and .4). In addition, the WPAN communications **56** may be in accordance with a near field communication (NFC) protocol as may be used in an RFID system, card reading system, chip reading system, etc. For example, the WPAN communications **56** may be with a headset, a wireless mouse, a wireless keypad, a wireless keyboard, etc.

The WWAN communications **58** may be in accordance with past, present, or future versions of cellular voice standards (e.g., global system for mobile communications (GSM), wide bandwidth code division multiplexing (WCDMA), CDMA), cellular data standards (e.g., high-speed downlink packet access (HSDPA), high-speed uplink packet access (HSUPA), Enhanced Data rates for GSM Evolution (EDGE), General Packet Radio Service (GPRS)), broadcast television standards (e.g., digital video broadcasting-handheld (DVB-H), digital multimedia broadcasting (DMB)), broadcast radio (e.g., FM), and/or global positioning system (GPS) standards.

FIG. **3** is a schematic block diagram of another embodiment of a wireless communication device **50** that includes the IC **52** and the antenna system **54**. In this embodiment, the IC **52** includes a baseband processing module **60**, a network processing module **62**, a calibration processing module **64**, a receiver section **66**, and a transmitter section **68**. The baseband processing module **60**, the network processing module **62**, and the calibration processing module **64** may be separate processing modules, a shared processing module, or a combination thereof. The processing module may be a single processing device or a plurality of processing devices. Such a processing device may be a microprocessor, micro-controller, digital signal processor, microcomputer, central processing unit, field programmable gate array, programmable logic device, state machine, logic circuitry, analog circuitry, digital circuitry, and/or any device that manipulates signals (analog and/or digital) based on hard coding of the circuitry and/or operational instructions. The processing module may have an associated memory and/or memory element, which may be a single memory device, a plurality of memory devices, and/or embedded circuitry of the processing module. Such a memory device may be a read-only memory, random access memory, volatile memory, non-volatile memory, static memory, dynamic memory, flash memory, cache memory, and/or any device that stores digital information. Note that when the processing module implements one or more of its functions via a state machine, analog circuitry, digital circuitry, and/or logic circuitry, the memory and/or memory element storing the corresponding operational instructions may be embedded within, or external to, the circuitry comprising the state machine, analog circuitry, digital circuitry, and/or logic circuitry. Further note that, the memory element stores, and the processing module executes, hard coded and/or operational instructions corresponding to at least some of the steps and/or functions illustrated in FIGS. **3-19**.

In operation, the network processing module **62** establishes a wireless communication protocol **78** in accordance with an operational mode **80** of the wireless communication device. The wireless communication protocol **78** may be one or more of a WLAN communication protocol (e.g., IEEE 802.11x, FFC), a WPAN communication protocol (e.g., Bluetooth, ZigBee, IEEE 802.15x, NFC) and a WWAN communication protocol (e.g., GSM, EDGE, GPRS, WCDMA, CDMA, HSDPA, HSUPA, DVB-H, DMB, GPS, FM). Note that the network processing module **62** may automatically detect the operational mode **80** and/or detect the operational mode **80** based on a user selection.

The network processing module **62** also establishes operational parameters **82** based on the wireless communication protocol **78**. The operational parameters **82** may includes limits and/or specific values for one or more of frequency bands, channels, gain settings, filter corner frequency or frequencies, filter attenuation roll-off, bandwidth, center frequency, quality factor, frequency dependent impedance value, attenuation setting, gain roll-off, transmit power settings, antenna configuration settings, and frequency response. Note that the operational parameters **82** may include default settings and/or include calculated settings for one or more of the parameters as will be further described with reference to FIG. **6**.

As an example, assume that the mode of operation **80** is WLAN and the wireless communication protocol is IEEE 802.11g. In this example, the operational parameters **82** indicate initial values and/or ranges of values for one or more of: a frequency band of 2.4 GHz, oscillation settings for the transmit and receive local oscillations **96** and **98** (e.g., 2.4 GHz for direct conversion in this example), LNA settings (e.g., gain, input impedance, frequency response, load, bandwidth, etc.), antenna matching settings (e.g., impedance, frequency response, bandwidth, quality factor, center frequency, etc.) for the receiver and transmitter sections **66** and **68**, the antenna configuration settings (e.g., antenna configuration, frequency response, quality factor, impedance, bandwidth, center frequency, etc.), RF filtering settings (gain/attenuation value, bandwidth, roll-off, corner frequency(ies), etc.), analog filtering settings (e.g., gain/attenuation value, bandwidth, roll-off, corner frequency(ies), etc.), transmitter RF signal processing (e.g., beamforming, antenna polarization, maximum signal to noise ratio, and maximum signal to interfer-

ence ratio, etc.), PA settings (e.g., gain, output impedance, frequency response, load, bandwidth, transmit power level, etc.), and up-conversion and/or down conversion mixer settings (e.g., gain, load, frequency response, etc.). Thus, the wireless communication device **50** is initialized and/or operates in accordance with the operational parameters **82**.

In another embodiment, the calibration processing module **64** providing the RF receive feedback **84** and the RF transmit feedback **86** to the network processing module **62**. The network processing module **62** utilizes the RF receive feedback **84** and the RF transmit feedback **86** in addition to the wireless communication protocol **78** to establish the operational parameters **82**.

The calibration processing module **84** receives the operational parameters **82** and receives feedback from the receiver section **66** and the transmitter section **68** (e.g., RF receive feedback **84** and RF transmit feedback **86**, respectively). The RF receive feedback **84** may include one or more of: received signal strength indication (RSSI), receive antenna matching performance indication (e.g., measurements indicative of impedance, frequency response, bandwidth, quality factor, center frequency, etc.), LNA performance indication (e.g., measurements indicative of gain, input impedance, frequency response, bandwidth, loading, etc.), receiver RF filtering performance indication (e.g., measurements indicative of gain/attenuation, bandwidth, roll-off, corner frequency(ies), etc.), down-conversion performance indication (e.g., measurements indicative of gain, load, frequency response, etc.), and receive analog filtering performance indication (e.g., gain/attenuation value, bandwidth, roll-off, corner frequency(ies), etc.). The RF transmit feedback **86** may include one or more of: a transmit power level indication, transmit antenna matching performance indication (e.g., measurements indicative of impedance, frequency response, bandwidth, quality factor, center frequency, etc.), PA performance indication (e.g., measurements indicative of gain, input impedance, frequency response, bandwidth, transmit power level, linearity, loading, etc.), transmit RF filtering performance indication (e.g., measurements indicative of gain/attenuation, bandwidth, roll-off, corner frequency(ies), etc.), up-conversion performance indication (e.g., measurements indicative of gain, load, frequency response, etc.), and transmit analog filtering performance indication (e.g., gain/attenuation value, bandwidth, roll-off, corner frequency(ies), etc.).

The calibration processing module **84** uses the operational parameters **82** and the RF receive feedback **84** to generate RF receiver calibration information **88**. In an embodiment, the calibration processing module **84** utilizes the operational parameters **82** to determine desired performance levels of the receiver section **66** and uses the RF receive feedback **84** to determine actual performance levels. The calibration processing module **84** determines differences between the desired performance levels and the actual performance levels to generate the RF receiver calibration information **88**. The RF receiver calibration information **88** may include one or more of: default settings for one or more components of the receiver section **66**, new or adjusted LNA settings, new or adjusted antenna matching settings, new or adjusted antenna configuration settings, new or adjusted RF filtering settings, new or adjusted analog filtering settings, and new or adjusted down conversion mixer settings.

The calibration processing module **84** also uses the operational parameters **82** and the RF transmit feedback **86** to generate RF transmitter calibration information **90**. In an embodiment, the calibration processing module **84** utilizes the operational parameters **82** to determine desired performance levels of the transmitter section **6** and uses the RF transmit feedback **8** to determine actual performance levels. The calibration processing module **84** determines differences between the desired performance levels and the actual performance levels to generate the RF transmitter calibration information **90**. The RF transmitter calibration information **90** may include one or more of: default settings for one or more components of the transmitter section **68**, new or adjusted PA settings, new or adjusted antenna matching settings, new or adjusted antenna configuration settings, new or adjusted RF filtering settings, new or adjusted analog filtering settings, and new or adjusted up-conversion mixer settings.

The baseband processing module **60** converts outbound data **70** (e.g., digitized voice, data, text, image file, audio file, video file, etc.) into an outbound symbol stream **74** in accordance with the wireless communication protocol **78**. The particular type of processing performed by the baseband processing module **60** is dependent upon the wireless communication protocol **78** and may include, but is not limited to, scrambling, encoding, puncturing, constellation mapping, PSK modulation, GMSK modulation, QPSK modulation, FSK modulation, 8-PSK modulation, n-QAM modulation, and/or digital baseband to IF conversion.

The baseband processing module **60** also converts an inbound symbol stream **76** into inbound data **72** (e.g., digitized voice, data, text, image file, audio file, video file, GPS signals, digitized FM audio, digital video broadcast, etc.) in accordance with the wireless communication protocol **78**. The particular type of processing performed by the baseband processing module **60** is dependent upon the wireless communication protocol **78** and may include, but is not limited to, descrambling, decoding, depuncturing, constellation demapping, PSK demodulation, GMSK demodulation, QPSK demodulation, FSK demodulation, 8-PSK demodulation, n-QAM demodulation, and/or IF to digital baseband conversion.

The receiver section **66** (embodiments of which will be described in greater detail with reference to FIGS. **5** and **6**) provides the RF receive feedback **84** and converts an inbound RF signal **94** into the inbound symbol stream **76** in accordance with the RF receiver calibration information **88** and a receive local oscillation **98**. The conversion performed by the receiver section **66** is dependent upon the wireless communication protocol. For example, if the wireless communication protocol utilizes Gaussian Minimum Shift Keying (GMSK) scheme, the receiver section **66** includes a GMSK receiver architecture to recover a GMSK modulated signal (e.g., the inbound symbol stream **76**) from the inbound RF signal **94**. As another example, if the wireless communication protocol utilizes an 8-PSK (phase shift keying) scheme and/or an x-QAM scheme, the receiver section **66** includes an 8-PSK or x-QAM receiver architecture to recover an 8-PSK or x-QAM modulated signal (e.g., the inbound symbol stream **76**) from the inbound RF signal **94**.

The transmitter section **68** (embodiments of which will be described in greater detail with reference to FIGS. **5** and **6**) provides the RF transmit feedback **86** and converts the outbound symbol stream **74** into an outbound RF signal **92** in accordance with the RF transmitter calibration information **90** and a transmit local oscillation **96**. The conversion performed by the transmitter section **68** is dependent upon the wireless communication protocol. For example, if the wireless communication protocol utilizes a GMSK scheme, the transmitter section **68** includes a GMSK transmitter architecture to convert a GMSK modulated signal (e.g., the outbound symbol stream **76**) into the outbound RF signal **92**. As another example, if the wireless communication protocol utilizes an 8-PSK (phase shift keying) scheme and/or an x-QAM

scheme, the transmitter section **68** includes an 8-PSK or x-QAM transmitter architecture to convert an 8-PSK or x-QAM modulated signal (e.g., the outbound symbol stream **76**) into the outbound RF signal **92**.

The antenna system **54** (embodiments of which are described in greater detail with reference to FIGS. **8-19**) provides the inbound RF signal **94** to the receiver section **66** and receives the outbound RF signal **92** from the transmitter section **68**. The antenna section **54** then transmits the outbound RF signal **92**.

FIG. **4** is a schematic block diagram of another embodiment of a wireless communication device **50** that includes the IC **52** and the antenna system **54**. The IC **52** includes the baseband processing module **60**, the network processing module **62**, the calibration processing module **64**, the receiver section **66**, and the transmitter section **68**. The baseband processing module **60**, the network processing module **62**, and the calibration processing module **64** may be separate processing modules, a shared processing module, or a combination thereof.

In this embodiment, the wireless communication device **50** is in a multi-system operational mode **100** (e.g., supporting two or more wireless communication protocols concurrent operations and/or contemporaneous operations). In this embodiment, the network processing module **62** establishes first and second wireless communication protocols **78** and **102** in accordance with a concurrent operational mode **100** of the wireless communication device **50**. Note that the first and second wireless communication protocols **78** and **102** may each be one or more of a WLAN communication protocol (e.g., IEEE 802.11x, FFC), a WPAN communication protocol (e.g., Bluetooth, ZigBee, IEEE 802.15x, NFC) and a WWAN communication protocol (e.g., GSM, EDGE, GPRS, WCDMA, CDMA, HSDPA, HSUPA, DVB-H, DMB, GPS, FM).

The network processing module **62** also establishes first operational parameters **82** based on the first wireless communication protocol **78** and establishes second operational parameters **116** based on the second wireless communication protocol **102**. The first and second operational parameters **82** and **116** may be one or more of the operational parameters **82** discussed with reference to FIG. **3**.

The baseband processing module **60** converts first outbound data **70** into a first outbound symbol stream **74** in accordance with a first wireless communication protocol **78** and converts a first inbound symbol stream **76** into first inbound data **72** in accordance with the first wireless communication protocol **78**. The baseband processing module **60** also converts second outbound data **104** (e.g., digitized voice, data, text, image file, audio file, video file, etc.) into a second outbound symbol stream **106** in accordance with a second wireless communication protocol **102** and convert a second inbound symbol stream **126** into second inbound data **128** (e.g., digitized voice, data, text, image file, audio file, video file, GPS signals, digitized FM audio, digital video broadcast, etc.) in accordance with the second wireless communication protocol **102**.

The calibration processing module **64** is coupled to receive first RF receive feedback **84** corresponding to the first wireless communication protocol **78**; receive second RF receive feedback **124** corresponding to the second wireless communication protocol **102**; receive first RF transmit feedback **86** corresponding to the first wireless communication protocol **78**; and receive second RF transmit feedback **112** corresponding to the second wireless communication protocol **102**. The second RF transmit and receive feedback may be similar in scope to the first RF transmit and receive feedback discussed with reference to FIG. **3**.

The calibration processing module **64** is also coupled to generate first RF receiver calibration information **88** based on the first operational parameters **82** and the first RF receive feedback **84**; generate second RF receiver calibration information **122** based on the second operational parameters **116** and the second RF receive feedback **124**; generate first RF transmitter calibration information **90** based on the first operational parameters **82** and the first RF transmit feedback **86**; and generate second RF transmitter calibration information **122** based on the second operational parameters **116** and the second RF transmit feedback **112**. The second RF RX and TX calibration information **122** and **114** may be similar in scope to the first RF RX and TX calibration information **88** and **90** discussed with reference to FIG. **3**.

The receiver section **66** provides the first and second RF receive feedback **84** and **124** to the calibration module **64**. The receiver section **66** also converts a first inbound RF signal **94** into the first inbound symbol stream **76** in accordance with the first RF receiver calibration information **88** and a first receive local oscillation **98**. The receiver section **66** further converts a second inbound RF signal **118** into the second inbound symbol stream **126** in accordance with the second RF receiver calibration information **122** and a second receive local oscillation **120**.

The transmitter section **68** provides the first and second RF transmit feedback **86** and **112** to the calibration processing module **64**. In addition, the transmitter section **68** converts the first outbound symbol stream **74** into a first outbound RF signal **92** in accordance with the first RF transmitter calibration information **90** and a first transmit local oscillation **96**. The transmitter section **68** also converts the second outbound symbol stream **106** into a second outbound RF signal **110** in accordance with the second RF transmitter calibration information **114** and a second transmit local oscillation **108**.

In another embodiment, the network processing module **62** may determine whether the first and second wireless communication protocols **78** and **102** have at least partially overlapping frequency bands. For example, the network processing module **62** may determine that the first wireless communication protocol **78** is EDGE operating in the 1900 MHz frequency band and the second communication protocol is WCDMA operating in the 1900 MHz and 2100 MHz frequency bands.

If the first and second wireless communication protocols have at least partially overlapping frequency bands, the network processing module **62** determines whether the first outbound RF signal will interfere with the second inbound RF signal or whether the second outbound RF signal will interfere with the first inbound RF signal. Such a determination may be made by intrinsic data or empirical data. For example, the network processing module **62** determines whether the EDGE RF signals will interfere with the WCDMA RF signals, and vice versa. Since both use the 1900 MHz frequency band, it can be assumed that the EDGE and WCDMA RF signals will interfere with each other if simultaneously operated. However, by using a polarized antenna structure, selective RF filtering, and selective baseband processing, it is possible for simultaneous EDGE and WCDMA operation. Alternatively, simultaneous operation of the EDGE and WCDMA may occur via a nested sharing of the appropriate RF resources, where one of the protocols reserves the RF resources and allocates part of its granted RF resources to the other protocol.

If the first outbound RF signal will interfere with the second inbound RF signal or if the second outbound RF signal will interfere with the first inbound RF signal, the network processing module **62** establishes an RF resource sharing protocol between the first and second wireless communication protocols. The RF resource sharing protocol may include time division multiplexing, frequency division multiplexing, a round robin scheme, a collision sense multiple access (CSMA) with collision avoidance, etc. Note that the RF resource(s) being shared may be one or more channels within a frequency band, a particular carrier frequency within the frequency band, and/or multiple carrier frequencies within the frequency band.

FIG. **5** is a schematic block diagram of an embodiment of a local oscillation module **130**, a transmitter section **68**, and a receiver section **66** that may be used in the wireless communication device **50** of FIG. **4**. In this embodiment, the transmitter section **68** includes a first transmitter module **136** and a second transmitter module **138** and the receiver section **66** includes a first receiver module **132** and a second receiver module **134**. The local oscillation module **130** includes two or more local oscillators to produce the transmit and receive local oscillations **96**, **98**, **108**, and **120**. One of the local oscillations is shown to include a signal source (e.g., a crystal oscillator, phase locked loop, etc.), a ½ frequency divider, mixers, and a phase shift (e.g., ϕ) to produce two pairs of local oscillations (e.g., LOI_1 and LOQ_1 and LOI_2 and LOQ_2).

Each of the transmitter modules **136** and **138** may be of a similar construct and each of the receiver modules **132** and **134** may also be of a similar construct. For example, the transmitter modules **136** and **138** may include two power amplifier modules (e.g., each including one or more power amplifiers and one or more amplifier drivers coupled in series and/or in parallel), a first pair of mixers, and a second pair of mixers. The first pair of mixers mix an analog and filtered representation of the outbound symbol stream **74** or **106** with a first local oscillation pair (e.g., LOI_1 and LOQ_1) to produce a mixed signal that is amplified by a first one of the power amplifier modules in accordance with the RF TX calibration information **90** or **114**. The second pair of mixers mix the analog and filtered representation of the outbound symbol stream **74** or **106** with a second local oscillation pair (e.g., LOI_2 and LOQ_2) to produce a second mixed signal that is amplified by a second one of the power amplifier modules in accordance with the RF TX calibration information **90** or **114**. The two RF signals are combined in air to produce the outbound RF signal **92** or **110**. In this manner, by controlling the phase shift within the local oscillation module **130** beamforming, polarization diversity, maximum signal to interference ratio, and/or maximum signal to noise ratio may be obtained.

Continuing with the preceding example, the receiver modules **132** and **134** may each include low noise amplifier (LNA) modules (e.g., one or more low noise amplifiers coupled in series and/or in parallel), and two pairs of mixers. Each of the LNA modules receives the inbound RF signal **94** or **118** and amplifies it in accordance with the RF RX calibration information **88** or **122** to produce amplified inbound RF signals. The first pair of mixers mixes one of the amplified inbound RF signals with a first local oscillation pair (e.g., LOI_1 and LOQ_1) to produce a first analog representation of the inbound symbol stream. The second pair of mixers mixes the other amplifier inbound RF signal with a second local oscillation pair (e.g., LOI_2 and LOQ_2) to produce a second analog representation of the inbound symbol stream. The first and second analog representations of the inbound symbol stream are combined to produce an analog representation of the inbound symbol stream **76** or **126**.

FIG. **6** is a schematic block diagram of another embodiment of a local oscillation module **130**, a transmitter section **68**, and a receiver section **66** coupled to a calibration processing module **64** via an analog to digital interface **160**. In this embodiment, the receive section **66** includes an antenna matching circuit module **140**, an RF filter module **142**, an LNA module **144**, a down conversion module **146**, and an analog filter module **148**. The transmitter section **68** includes an analog filter module **150**, an up conversion module **152**, a power amplifier (PA) module **154**, an RF filtering module **156**, and an antenna matching circuit module **158**.

Within the receiver section **66**, the antenna matching circuit module **140**, which may include a transmission line, an impedance matching circuit, and/or tuning circuit, is coupled to receive the inbound RF signal **94** and/or **118** from the antenna system **54**. The antenna matching circuit module **140** may be tuned in accordance with a matching control signal of the RF receiver calibration information **88** and/or **122**. For example, the RF receiver calibration information **88** and/or **122** may provide control signals to set an impedance, bandwidth, center frequency, and/or quality factor of the antenna matching circuit module **140** to support the particular wireless communication protocol. In addition, the antenna matching circuit module **140** may generate receive antenna matching feedback of the RF receive feedback **84** and/or **124**. For example, the receive antenna matching feedback may include measurements indicative of impedance, frequency response, bandwidth, quality factor, center frequency, etc. As an alternative example, the antenna matching circuit module **140** may include processing circuitry to interpret such measurements to calculate its input impedance, its frequency response, its bandwidth, its quality factor, its center frequency, etc. and to provide such values to the calibration module **64** via the analog to digital interface **160**.

The RF filtering module **142** is coupled to filter the inbound RF signal in accordance with an RF filter control signal of the RF receiver calibration information **88** and/or **122** to produce a filtered inbound RF signal. For example, the RF filtering module **142** may adjust its gain/attenuation, its bandwidth, its roll-off, its corner frequency or frequencies, etc. in accordance with the RF filter control signal. In addition, the RF filtering module **142** may generate RF receive filtering feedback of the RF receive feedback **84** and/or **124**. Such RF receive filtering feedback may include measurements indicative of gain/attenuation, bandwidth, roll-off, corner frequency or frequencies, etc. Alternatively, the RF filtering module **142** may include processing circuitry to interpret the measurements to calculate its gain/attenuation, its bandwidth, its roll-off, its corner frequency or frequencies, etc. and to provide such values to the calibration module **64** via the analog to digital interface **160**.

The low noise amplifier (LNA) module **144** is coupled to amplify the filtered inbound RF signal in accordance with a LNA control signal of the RF receiver calibration information **88** and/or **122** to produce an amplified inbound RF signal. For example, the LNA module **144**, which may include one or more low noise amplifiers coupled in series and/or in parallel, may adjust its gain, its input impedance, its frequency response, its bandwidth, its loading, etc. in accordance with the LNA control signal. In addition, the LNA module **144** may generate LNA feedback of the RF receive feedback **84** and/or **124**. Such LNA feedback may include measurements indicative of gain, input impedance, frequency response, bandwidth, loading, etc. Alternatively, the LNA module **144**

may include processing circuitry to interpret the measurements to calculate its gain, its input impedance, its frequency response, its bandwidth, its loading, etc. and to provide such values to the calibration module **64** via the analog to digital interface **160**.

The down conversion module **146**, which may include one or more pair of mixers and a combining circuit, is coupled to convert the amplified inbound RF signal into a baseband or near baseband signal (e.g., has a carrier frequency of 0 Hz to a few MHz) based on the receive local oscillation **98** and/or **120** and in accordance with a down conversion control signal of the RF receiver calibration information **88** and/or **122**. For example, the down conversion module **146** may adjust its gain, its load, its frequency response, etc. in accordance with the down conversion control signal. In addition, the down conversion module **146** may generate down conversion feedback of the RF receive feedback **84** and/or **124**. For example, the down conversion feedback may include measurements indicative of gain, load, frequency response, etc. Alternatively, the down conversion module **146** may include processing circuitry to interpret the measurements to calculate its gain, it load, it frequency response, etc. and to provide such values to the calibration module **64** via the analog to digital interface **160**.

The analog baseband or near baseband filter module **148** is coupled to filter the baseband or near baseband signal in accordance with an analog filter control signal of the RF receiver calibration information **88** and/or **122** to produce an analog representation of the inbound symbol stream **76** and/or **126**. For example, the analog baseband or near baseband filter module **148** may adjust its gain/attenuation, its bandwidth, its roll-off, its corner frequency or corner frequencies, etc. in accordance with the analog filter control signal. In addition, the analog baseband or near baseband filter module **148**, which may include a gain stage, a low pass filter, and/or a bandpass filter, may generate analog filtering feedback of the RF receive feedback **84** and/or **124**. For example, the analog filtering feedback may include measurements indicative of gain/attenuation, bandwidth, roll-off, corner frequency, corner frequencies, etc. Alternatively, the analog baseband or near baseband filter module **148** may include processing circuitry to interpret the measurements to calculate its gain/attenuation, its bandwidth, its roll-off, its corner frequency or corner frequencies, etc. and to provide such values to the calibration module **64** via the analog to digital interface **160**.

In an embodiment, the network processing module **62** may establish the operational parameters to include a range of antenna matching parameters from which the matching control signal is generated; establish the operational parameters to include a range of RF filter control parameters from which the RF filter control signal is generated; establish the operational parameters to include a range of LNA parameters from which the LNA control signal is generated; establish the operational parameters to include a range of down-conversion parameters from which the down conversion control signal is generated; and/or establish the operational parameters to include a range of analog filter parameters from which the analog filter control signal is generated. As such, one or more of the components **140-148** of the receiver section **66** may be adjusted based on the RF receiver calibration information **88** or **122**. Alternatively, the network processing module **62** may generate the operational parameters **82** and/or **116** such that one or more the components **140-148** of the receiver section **66** is set to a default, or nominal, operating level.

Within the transmitter section **68**, the analog baseband or near baseband filter module **150** is coupled to filter the outbound symbol stream **76** and/or **106** in accordance with an analog filter control signal of the RF transmitter calibration information **90** and/or **114** to produce an analog representation of the outbound symbol stream. For example, the analog baseband or near baseband filter module **150**, which may include a digital to analog converter, a gain stage, a low pass filter, and/or a bandpass filter, may adjust its gain/attenuation, its bandwidth, its roll-off, its corner frequency or corner frequencies, etc. in accordance with the analog filter control signal. In addition, the analog baseband or near baseband filter module **150** may generate analog filtering feedback of the RF transmit feedback **86** and/or **112**. For example, the analog filtering feedback may include measurements indicative of gain/attenuation, bandwidth, roll-off, corner frequency, corner frequencies, etc. Alternatively, the analog baseband or near baseband filter module **150** may include processing circuitry to interpret the measurements to calculate its gain/attenuation, its bandwidth, its roll-off, its corner frequency or corner frequencies, etc. and to provide such values to the calibration module **64** via the analog to digital interface **160**.

The up conversion module **152** is coupled to convert the analog representation of the outbound symbol stream into an up-converted signal based on the transmit local oscillation **96** and/or **108** and in accordance with an up conversion control signal of the RF transmitter calibration information **90** and/or **114**. For example, the up conversion module **152**, which may include one or more pair of mixers and a combining circuit, may adjust its gain, its load, its frequency response, etc. in accordance with the down conversion control signal. In addition, the up conversion module **152** may generate up conversion feedback of the RF transmit feedback **86** and/or **112**. For example, the up conversion feedback may include measurements indicative of gain, load, frequency response, etc. Alternatively, the up conversion module **152** may include processing circuitry to interpret the measurements to calculate its gain, it load, it frequency response, etc. and to provide such values to the calibration module **64** via the analog to digital interface **160**.

The power amplifier (PA) module **154** is coupled to amplify the up-converted signal in accordance with a PA control signal of the RF transmitter calibration information **90** and/or **114** to produce an amplified outbound RF signal. For example, the PA module **154**, which may include one or more power amplifiers and/or one or more PA drivers coupled in series and/or in parallel, may adjust its gain, its input impedance, its frequency response, its bandwidth, its loading, etc. in accordance with the PA control signal. In addition, the PA module **154** may generate PA feedback of the RF transmit feedback **86** and/or **112**. Such PA feedback may include measurements indicative of gain, input impedance, frequency response, bandwidth, loading, etc. Alternatively, the PA module **154** may include processing circuitry to interpret the measurements to calculate its gain, its input impedance, its frequency response, its bandwidth, its loading, etc. and to provide such values to the calibration module **64** via the analog to digital interface **160**.

The RF filtering module **156** is coupled to filter the amplified outbound RF signal in accordance with an RF filter control signal of the RF transmitter calibration information to produce the outbound RF signal **92** and/or **110**. For example, the RF filtering module **156** may adjust its gain/attenuation, its bandwidth, its roll-off, its corner frequency or frequencies, etc. in accordance with the RF filter control signal. In addition, the RF filtering module **156** may generate RF transmit filtering feedback of the RF transmit feedback **86** and/or **112**. Such RF transmit filtering feedback may include measure-

ments indicative of gain/attenuation, bandwidth, roll-off, corner frequency or frequencies, etc. Alternatively, the RF filtering module **156** may include processing circuitry to interpret the measurements to calculate its gain/attenuation, its bandwidth, its roll-off, its corner frequency or frequencies, etc. and to provide such values to the calibration module **64** via the analog to digital interface **160**.

The antenna matching circuit module **158**, which may include a transmission line, an impedance matching circuit, and/or tuning circuit, is coupled to provide the outbound RF signal **92** and/or **110** to the antenna system **54**. The antenna matching circuit module **158** may be tuned in accordance with a matching control signal of the RF transmitter calibration information **86** and/or **112**. For example, the RF transmitter calibration information **86** and/or **112** may provide control signals to set an impedance, bandwidth, center frequency, and/or quality factor of the antenna matching circuit module **158** to support the particular wireless communication protocol. In addition, the antenna matching circuit module **158** may generate receive antenna matching feedback of the RF transmit feedback **90** and/or **114**. For example, the transmit antenna matching feedback may include measurements indicative of impedance, frequency response, bandwidth, quality factor, center frequency, etc. As an alternative example, the antenna matching circuit module **158** may include processing circuitry to interpret such measurements to calculate its input impedance, its frequency response, its bandwidth, its quality factor, its center frequency, etc. and to provide such values to the calibration module **64** via the analog to digital interface **160**.

In an embodiment, the network processing module **62** may establish the operational parameters to include a range of analog filter parameters from which the analog filter control signal is generated; establish the operational parameters to include a range of up-conversion parameters from which the up conversion control signal is generated; establish the operational parameters to include a range of PA parameters from which the PA control signal is generated; establish the operational parameters to include a range of RF filter control parameters from which the RF filter control signal is generated; and establish the operational parameters to include a range of antenna matching parameters from which the matching control signal is generated. As such, one or more of the components **150-158** of the transmitter section **68** may be adjusted based on the RF transmitter calibration information **90** or **114**. Alternatively, the network processing module **62** may generate the operational parameters **82** and/or **116** such that one or more the components **150-158** of the transmitter section **68** is set to a default, or nominal, operating level.

FIG. **7** is a schematic block diagram of another embodiment of a wireless communication device **50** that includes two ICs **52-1** and **52-1** and the antenna system **54**. In this embodiment, IC **52-1** includes a processing module **170** and IC **52-2** includes a receiver section **66**, a transmitter section **68**, and a local oscillation module **130**. The processing module **170** may be a single processing device or a plurality of processing devices. Such a processing device may be a microprocessor, micro-controller, digital signal processor, microcomputer, central processing unit, field programmable gate array, programmable logic device, state machine, logic circuitry, analog circuitry, digital circuitry, and/or any device that manipulates signals (analog and/or digital) based on hard coding of the circuitry and/or operational instructions. The processing module may have an associated memory and/or memory element, which may be a single memory device, a plurality of memory devices, and/or embedded circuitry of the processing module. Such a memory device may be a read-only memory, random access memory, volatile memory, non-volatile memory, static memory, dynamic memory, flash memory, cache memory, and/or any device that stores digital information. Note that when the processing module implements one or more of its functions via a state machine, analog circuitry, digital circuitry, and/or logic circuitry, the memory and/or memory element storing the corresponding operational instructions may be embedded within, or external to, the circuitry comprising the state machine, analog circuitry, digital circuitry, and/or logic circuitry. Further note that, the memory element stores, and the processing module executes, hard coded and/or operational instructions corresponding to at least some of the steps and/or functions illustrated in FIGS. **7-19**.

In operation, the processing module **170** establishes a wireless communication protocol **78** in accordance with an operational mode **80** of the wireless communication device. The wireless communication protocol **78** may be one or more of a WLAN communication protocol (e.g., IEEE 802.11x, FFC), a WPAN communication protocol (e.g., Bluetooth, ZigBee, IEEE 802.15x, NFC) and a WWAN communication protocol (e.g., GSM, EDGE, GPRS, WCDMA, CDMA, HSDPA, HSUPA, DVB-H, DMB, GPS, FM). Note that the processing module **170** may automatically detect the operational mode **80** and/or detect the operational mode **80** based on a user selection.

The processing module **170** also establishes operational parameters **82** based on the wireless communication protocol **78**. The operational parameters **82** may includes limits and/or specific values for one or more of frequency bands, channels, gain settings, filter corner frequency or frequencies, filter attenuation roll-off, bandwidth, center frequency, quality factor, frequency dependent impedance value, attenuation setting, gain roll-off, transmit power settings, antenna configuration settings, and frequency response.

The processing module **170** receives feedback from the receiver section **66** and the transmitter section **68** (e.g., RF receive feedback **84** and RF transmit feedback **86**, respectively). The processing module **170** uses the operational parameters **82** and the RF receive feedback **84** to generate RF receiver calibration information **88**. In an embodiment, the processing module **170** utilizes the operational parameters **82** to determine desired performance levels of the receiver section **66** and uses the RF receive feedback **84** to determine actual performance levels. The processing module **170** determines differences between the desired performance levels and the actual performance levels to generate the RF receiver calibration information **88**. The RF receiver calibration information **88** may include one or more of: default settings for one or more components of the receiver section **66**, new or adjusted LNA settings, new or adjusted antenna matching settings, new or adjusted antenna configuration settings, new or adjusted RF filtering settings, new or adjusted analog filtering settings, and new or adjusted down conversion mixer settings.

The processing module **170** also uses the operational parameters **82** and the RF transmit feedback **86** to generate RF transmitter calibration information **90**. In an embodiment, the processing module **170** utilizes the operational parameters **82** to determine desired performance levels of the transmitter section **6** and uses the RF transmit feedback **86** to determine actual performance levels. The processing module **170** determines differences between the desired performance levels and the actual performance levels to generate the RF transmitter calibration information **90**. The RF transmitter calibration information **90** may include one or more of: default settings for one or more components of the transmitter

section **68**, new or adjusted PA settings, new or adjusted antenna matching settings, new or adjusted antenna configuration settings, new or adjusted RF filtering settings, new or adjusted analog filtering settings, and new or adjusted upconversion mixer settings.

The processing module **170** further functions to convert outbound data **70** (e.g., digitized voice, data, text, image file, audio file, video file, etc.) into an outbound symbol stream **74** in accordance with the wireless communication protocol **78**. The particular type of processing performed by the processing module **170** is dependent upon the wireless communication protocol **78** and may include, but is not limited to, scrambling, encoding, puncturing, constellation mapping, PSK modulation, GMSK modulation, QPSK modulation, FSK modulation, 8-PSK modulation, n-QAM modulation, and/or digital baseband to IF conversion.

The processing module **170** also converts an inbound symbol stream **76** into inbound data **72** (e.g., digitized voice, data, text, image file, audio file, video file, GPS signals, digitized FM audio, digital video broadcast, etc.) in accordance with the wireless communication protocol **78**. The particular type of processing performed by the processing module **170** is dependent upon the wireless communication protocol **78** and may include, but is not limited to, descrambling, decoding, depuncturing, constellation demapping, PSK demodulation, GMSK demodulation, QPSK demodulation, FSK demodulation, 8-PSK demodulation, n-QAM demodulation, and/or IF to digital baseband conversion.

The receiver section **66** provides the RF receive feedback **84** and converts an inbound RF signal **94** into the inbound symbol stream **76** in accordance with the RF receiver calibration information **88** and a receive local oscillation **98**. The conversion performed by the receiver section **66** is dependent upon the wireless communication protocol. For example, if the wireless communication protocol utilizes Gaussian Minimum Shift Keying (GMSK) scheme, the receiver section **66** includes a GMSK receiver architecture to recover a GMSK modulated signal (e.g., the inbound symbol stream **76**) from the inbound RF signal **94**. As another example, if the wireless communication protocol utilizes an 8-PSK (phase shift keying) scheme and/or an x-QAM scheme, the receiver section **66** includes an 8-PSK or x-QAM receiver architecture to recover an 8-PSK or x-QAM modulated signal (e.g., the inbound symbol stream **76**) from the inbound RF signal **94**.

The transmitter section **68** provides the RF transmit feedback **86** and converts the outbound symbol stream **74** into an outbound RF signal **92** in accordance with the RF transmitter calibration information **90** and a transmit local oscillation **96**. The conversion performed by the transmitter section **68** is dependent upon the wireless communication protocol. For example, if the wireless communication protocol utilizes a GMSK scheme, the transmitter section **68** includes a GMSK transmitter architecture to convert a GMSK modulated signal (e.g., the outbound symbol stream **76**) into the outbound RF signal **92**. As another example, if the wireless communication protocol utilizes an 8-PSK (phase shift keying) scheme and/or an x-QAM scheme, the transmitter section **68** includes an 8-PSK or x-QAM transmitter architecture to convert an 8-PSK or x-QAM modulated signal (e.g., the outbound symbol stream **76**) into the outbound RF signal **92**.

The antenna system **54** (embodiments of which are described in greater detail with reference to FIGS. **8-19**) provides the inbound RF signal **94** to the receiver section **66** and receives the outbound RF signal **92** from the transmitter section **68**. The antenna section **54** then transmits the outbound RF signal **92**.

FIG. **8** is a schematic block diagram of another embodiment of a wireless communication device **50** that includes an IC **52** and the antenna system **54**. In this embodiment, IC **52** includes a processing module **180**, a transceiver section **182**, and a local oscillation module **184**. The processing module **180** may be a single processing device or a plurality of processing devices. Such a processing device may be a microprocessor, micro-controller, digital signal processor, microcomputer, central processing unit, field programmable gate array, programmable logic device, state machine, logic circuitry, analog circuitry, digital circuitry, and/or any device that manipulates signals (analog and/or digital) based on hard coding of the circuitry and/or operational instructions. The processing module may have an associated memory and/or memory element, which may be a single memory device, a plurality of memory devices, and/or embedded circuitry of the processing module. Such a memory device may be a read-only memory, random access memory, volatile memory, non-volatile memory, static memory, dynamic memory, flash memory, cache memory, and/or any device that stores digital information. Note that when the processing module implements one or more of its functions via a state machine, analog circuitry, digital circuitry, and/or logic circuitry, the memory and/or memory element storing the corresponding operational instructions may be embedded within, or external to, the circuitry comprising the state machine, analog circuitry, digital circuitry, and/or logic circuitry. Further note that, the memory element stores, and the processing module executes, hard coded and/or operational instructions corresponding to at least some of the steps and/or functions illustrated in FIGS. **8-19**.

In operation, the processing module **180** establishes a wireless communication protocol **78** in accordance with an operational mode **80** of the wireless communication device. The wireless communication protocol **78** may be one or more of a WLAN communication protocol (e.g., IEEE 802.11x, FFC), a WPAN communication protocol (e.g., Bluetooth, ZigBee, IEEE 802.15x, NFC) and a WWAN communication protocol (e.g., GSM, EDGE, GPRS, WCDMA, CDMA, HSDPA, HSUPA, DVB-H, DMB, GPS, FM). Note that the processing module **180** may automatically detect the operational mode **80** and/or detect the operational mode **80** based on a user selection.

The processing module **180** also establishes operational parameters **188** based on the wireless communication protocol **78**. The operational parameters **188** may includes limits and/or specific values for one or more of frequency bands, channels, gain settings, filter corner frequency or frequencies, filter attenuation roll-off, bandwidth, center frequency, quality factor, frequency dependent impedance value, attenuation setting, gain roll-off, transmit power settings, antenna configuration settings, and frequency response.

The processing module **180** further functions to convert outbound data **70** (e.g., digitized voice, data, text, image file, audio file, video file, etc.) into an outbound symbol stream **74** in accordance with the wireless communication protocol **78**. The particular type of processing performed by the processing module **180** is dependent upon the wireless communication protocol **78** and may include, but is not limited to, scrambling, encoding, puncturing, constellation mapping, PSK modulation, GMSK modulation, QPSK modulation, FSK modulation, 8-PSK modulation, n-QAM modulation, and/or digital baseband to IF conversion.

The processing module **180** also converts an inbound symbol stream **76** into inbound data **72** (e.g., digitized voice, data, text, image file, audio file, video file, GPS signals, digitized FM audio, digital video broadcast, etc.) in accordance with

the wireless communication protocol **78**. The particular type of processing performed by the processing module **180** is dependent upon the wireless communication protocol **78** and may include, but is not limited to, descrambling, decoding, depuncturing, constellation demapping, PSK demodulation, GMSK demodulation, QPSK demodulation, FSK demodulation, 8-PSK demodulation, n-QAM demodulation, and/or IF to digital baseband conversion.

The transceiver section **182**, which may include the receiver section **66** and the transmitter section **68**, converts an inbound RF signal **94** into the inbound symbol stream **76** in accordance with a local oscillation **186** and the operational parameters **188**. The conversion performed by the transceiver section **182** is dependent upon the wireless communication protocol. For example, if the wireless communication protocol utilizes Gaussian Minimum Shift Keying (GMSK) scheme, the transceiver section **182** includes a GMSK receiver architecture to recover a GMSK modulated signal (e.g., the inbound symbol stream **76**) from the inbound RF signal **94**. As another example, if the wireless communication protocol utilizes an 8-PSK (phase shift keying) scheme and/or an x-QAM scheme, the transceiver section **182** includes an 8-PSK or x-QAM receiver architecture to recover an 8-PSK or x-QAM modulated signal (e.g., the inbound symbol stream **76**) from the inbound RF signal **94**.

The transceiver section **182** also converts the outbound symbol stream **74** into an outbound RF signal **92** in accordance with the local oscillation **186** and the operational parameters. The conversion performed by the transceiver section **182** is dependent upon the wireless communication protocol. For example, if the wireless communication protocol utilizes a GMSK scheme, the transceiver section **182** includes a GMSK transmitter architecture to convert a GMSK modulated signal (e.g., the outbound symbol stream **76**) into the outbound RF signal **92**. As another example, if the wireless communication protocol utilizes an 8-PSK (phase shift keying) scheme and/or an x-QAM scheme, the transceiver section **182** includes an 8-PSK or x-QAM transmitter architecture to convert an 8-PSK or x-QAM modulated signal (e.g., the outbound symbol stream **76**) into the outbound RF signal **92**.

The local oscillation module **184**, which may include one or more local oscillators as illustrated in FIG. **5**, generates the local oscillation **186** in accordance with the wireless communication protocol **78**. For example, the local oscillation **186** may include a receive local oscillation **98** and/or **120** and a transmit local oscillation **96** and/or **108**.

The antenna system **54** provides the inbound RF signal **94** to the receiver section **66** and receives the outbound RF signal **92** from the transmitter section **68** in accordance with the operational parameters **188**. The antenna section **54** then transmits the outbound RF signal **92**. The antenna system **54** may be configured to provide one of the plurality of antenna structures **190-204** in accordance with the operational parameters **188** to transceive the inbound and outbound RF signals **92** and/or **94**. The plurality of antenna structures includes two or more of a WCDMA antenna structure **190**; an HSDPA antenna structure **190**; an HSUPA antenna structure **190**; a GSM antenna structure **192**; an EDGE antenna structure **192**; a GPRS antenna structure **192**; a WLAN antenna structure **194**; a WPAN antenna structure **196**; a GPS antenna structure **198**; a DVB-H antenna structure **200**; a DMB antenna structure **200**; an FM antenna structure **202**, an NFC coil structure **204**; and an RFID antenna structure **204**. Note that an antenna structure **190-204** may include one or more antennas of the same polarization, of different polarizations, arranged in a diversity pattern, arranged in an array, having programmable segments, having programmable compensation components, and/or a combination thereof. Further note that the RFID antenna structure may be a NFC coil structure **204** for NFC RFID communications and/or a WLAN antenna structure for FFC RFID communications.

With respect to the antenna system **54**, the operational parameters **188** include two or more of: a frequency band in accordance with the wireless communication protocol; a channel within the frequency band, channel bandwidth of the channel, interferer frequency, antenna radiation pattern, full duplex communication, half duplex communication, gain setting, impedance setting, center frequency setting, attenuation setting, attenuation roll-off, antenna quality factor, antenna polarization setting, and antenna diversity setting. Based on two or more of these operational parameters **188**, the antenna system **54** provides one or more of the above mentioned antenna structures **190-204**.

FIG. **9** is a schematic block diagram of an embodiment of an antenna system **54** that includes a plurality of antenna segments **210-214**, configuration circuitry **216**, and compensation circuitry **218**. The configuration circuitry **216** couples the plurality of antenna segments **210-214** into a first antenna structure for transceiving radio frequency signals within a first radio frequency band when indicated by the operational parameters **188** and couples the plurality of antenna segments **210-214** into a second antenna structure for transceiving radio frequency signals within a second radio frequency band when indicted by the operational parameters **188**. In a further embodiment, the configuration circuitry **216** couples the plurality of antenna segments **210-214** into a third antenna structure for transceiving radio signals within a third radio frequency band when indicated by the operational parameters **188**.

In an embodiment, each of the antenna segments **210-214** includes a monopole antenna, which may be implemented as a meandering trace on a PCB, a dipole antenna, which may be implemented as a meandering trace on a PCB, a Yagi antenna, and/or a helical antenna as taught in co-pending patent application entitled PLANER HELICAL ANTENNA, having a filing date of Mar. 21, 2006 and a Ser. No. 11/386,247. In such an embodiment, the configuration circuitry **216** may include a transistor to provide coupling between first and second antenna segments of the plurality of antenna segments **210-214** and/or a capacitor to provide coupling between the first and second antenna segments of the plurality of antenna segments **210-214**.

In addition, the compensation circuitry **218** is coupled to the antenna segments **210-214** adjust a characteristic of the antenna structure in accordance with at least one of: the antenna radiation pattern, the gain setting, the impedance setting, the attenuation setting, the attenuation roll-off, the antenna quality factor, the antenna polarization setting, and the antenna diversity setting of the operational parameters **188**. An embodiment of the compensation circuitry **218** is discussed with reference to FIG. **12**.

FIG. **10** is a frequency domain diagram of three frequency bands centered at 900 MHz, 2.4 GHz, and 5.2 GHz. If a multiple band antenna system **54** were to be made to support these three bands, the antenna segments **210-214** would need to provide the desired antenna length for the corresponding frequency bands.

FIG. **11** is a diagram of an embodiment of the antenna segments **210-214** to provide an antenna structure that supports the frequency bands of FIG. **10**. In this example, the first antenna segment **210** is sized to provide a ½ wavelength (λ) dipole antenna for the 5.2 GHz operation. As is known, a 5.2 GHz signal has a wavelength of $3*10^8/5.2*10^9=57.7$ mm

and, accordingly, a ½ wavelength dipole antenna has a length of 28.8 mm. The antenna segment **210** may be of a meander trace shape, a planer helical winding, etc. As such, when the RF transceiver is in a 5.2 GHz mode, the configuration circuitry **216** couples the first antenna segment **210** to provide the 5.2 GHz antenna structure.

For 2.4 GHz operation, the resulting ½ λ dipole antenna structure has a total length of 62.5 mm ($\lambda_{2.4G}=3*10^8/2.4*10^9=125$ mm). Since the first antenna segment **210** is 28.8 mm in length, the second antenna segment **212** should be 33.7 mm in length to provide the desired overall length of 62.5 mm. The antenna segment **212** may also be of a meander trace shape, a planer helical winding, etc. In this mode, the configuration circuitry **216** couples the first and second antenna segments **210** and **212** together to provide a 2.4 GHz dipole antenna.

For 900 MHz operation, the resulting ½ λ dipole antenna structure has a total length of 166.6 mm ($\lambda_{900M}=3*10^8/9*10^8=333$ mm). Since the first antenna segment **210** is 28.8 mm in length and the second antenna segment **212** is 33.7 mm in length, the third antenna segment **214** should be 104.1 mm in length to provide the desired overall length of 166.6 mm. The antenna segment **214** may also be of a meander trace shape, a planer helical winding, etc. In this mode, the configuration circuitry **216** couples the first, second, and third antenna segments **210-214** together to provide a 900 MHz dipole antenna. As an alternative example, the number of antenna segments and their corresponding lengths may vary depending on the desired number of antenna structures to support a variety of frequency bands.

FIG. **12** is a schematic block diagram of another embodiment of an antenna system **54** that includes one or more of the antenna segments **210-214** and a corresponding portion of the compensation circuitry **218**. In this embodiment, the antenna segment **210**, **212**, and/or **214** includes a resistive component (R**1** and R**2**), an inductive component (L**1** and L**2**), a capacitive component (C**1** and C**2**). The corresponding portion of the compensation circuitry **218** includes an externally coupled resistive component ($R1_{ext}$ and $R2_{ext}$), an inductive component ($L1_{ext}$ and $L2_{ext}$), and/or an capacitive component ($C1_{ext}$ and $C2_{ext}$). The resistor, inductor, and/or capacitor of the compensation circuitry **218** may be fixed and/or adjustable. In this instance, the compensation circuitry **218** is programmed in accordance with the operational parameters **188** to adjust one or more of the antenna structure's quality factor, the antenna structure's bandwidth, the antenna structure's center frequency, the antenna structure's gain/attenuation, and/or the antenna structure's impedance.

FIG. **13** is a schematic block diagram of another embodiment of a wireless communication device **50** that includes an IC **52** and the antenna system **54**. In this embodiment, IC **52** includes a processing module **180**, a transceiver section **182**, and a local oscillation module **184**. The antenna system **54** includes a first antenna structure **230** and a second antenna structure **232**.

The processing module **180** is coupled to establish a first wireless communication protocol and a second wireless communication protocol in accordance with two of the plurality of operational modes **80** of the wireless communication device **50**. The first and second wireless communication protocols may each be one or more of a WLAN communication protocol (e.g., IEEE 802.11x, FFC), a WPAN communication protocol (e.g., Bluetooth, ZigBee, IEEE 802.15x, NFC) and a WWAN communication protocol (e.g., GSM, EDGE, GPRS, WCDMA, CDMA, HSDPA, HSUPA, DVB-H, DMB, GPS, FM). Note that the processing module **170** may automatically detect the operational mode **80** and/or detect the operational mode **80** based on a user selection.

The processing module **180** further functions to establish first operational parameters **188** based on the first wireless communication protocol and to establish second operational parameters **236** based on the second wireless communication protocol. Each of the operational parameters **188** and **236** may include limits and/or specific values for one or more of frequency bands, channels, gain settings, filter corner frequency or frequencies, filter attenuation roll-off, bandwidth, center frequency, quality factor, frequency dependent impedance value, attenuation setting, gain roll-off, transmit power settings, antenna configuration settings, and frequency response.

The processing module **180** further functions to convert outbound data **70** (e.g., digitized voice, data, text, image file, audio file, video file, etc.) into an outbound symbol stream **74** in accordance with the first wireless communication protocol. The processing module **180** also converts outbound data **104** (e.g., digitized voice, data, text, image file, audio file, video file, etc.) into an outbound symbol stream **106** in accordance with the second wireless communication protocol. The particular type of processing performed by the processing module **180** is dependent upon the wireless communication protocol and may include, but is not limited to, scrambling, encoding, puncturing, constellation mapping, PSK modulation, GMSK modulation, QPSK modulation, FSK modulation, 8-PSK modulation, n-QAM modulation, and/or digital baseband to IF conversion.

The processing module **180** also converts an inbound symbol stream **76** into inbound data **72** (e.g., digitized voice, data, text, image file, audio file, video file, GPS signals, digitized FM audio, digital video broadcast, etc.) in accordance with the first wireless communication protocol. The processing module **180** also converts an inbound symbol stream **126** into inbound data **128** (e.g., digitized voice, data, text, image file, audio file, video file, GPS signals, digitized FM audio, digital video broadcast, etc.) in accordance with the second wireless communication protocol. The particular type of processing performed by the processing module **180** is dependent upon the wireless communication protocol and may include, but is not limited to, descrambling, decoding, depuncturing, constellation demapping, PSK demodulation, GMSK demodulation, QPSK demodulation, FSK demodulation, 8-PSK demodulation, n-QAM demodulation, and/or IF to digital baseband conversion.

The transceiver section **182**, which may include the receiver section **66** and the transmitter section **68**, converts an inbound RF signal **94** into the inbound symbol stream **76** in accordance with a local oscillation **186** and the operational parameters **188** and converts an inbound RF signal **118** into the inbound symbol stream **126** in accordance with a local oscillation **234** and the operational parameters **236**. The conversion performed by the transceiver section **182** is dependent upon the wireless communication protocol. For example, if the wireless communication protocol utilizes Gaussian Minimum Shift Keying (GMSK) scheme, the transceiver section **182** includes a GMSK receiver architecture to recover a GMSK modulated signal (e.g., the inbound symbol stream **76**) from the inbound RF signal **94**. As another example, if the wireless communication protocol utilizes an 8-PSK (phase shift keying) scheme and/or an x-QAM scheme, the transceiver section **182** includes an 8-PSK or x-QAM receiver architecture to recover an 8-PSK or x-QAM modulated signal (e.g., the inbound symbol stream **76**) from the inbound RF signal **94**.

The transceiver section **182** also converts the outbound symbol stream **74** into an outbound RF signal **92** in accordance with the local oscillation **186** and the operational parameters **188** and converts the outbound symbol stream **106** into an outbound RF signal **110** in accordance with the local oscillation **234** and the operational parameters **236**. The conversion performed by the transceiver section **182** is dependent upon the wireless communication protocol. For example, if the wireless communication protocol utilizes a GMSK scheme, the transceiver section **182** includes a GMSK transmitter architecture to convert a GMSK modulated signal (e.g., the outbound symbol stream **76**) into the outbound RF signal **92**. As another example, if the wireless communication protocol utilizes an 8-PSK (phase shift keying) scheme and/or an x-QAM scheme, the transceiver section **182** includes an 8-PSK or x-QAM transmitter architecture to convert an 8-PSK or x-QAM modulated signal (e.g., the outbound symbol stream **76**) into the outbound RF signal **92**.

The local oscillation module **184**, which may include one or more local oscillators as illustrated in FIG. **5**, generates the local oscillations **186** and **234** in accordance with the wireless communication protocols. In an embodiment, the local oscillation **186** may include receive local oscillations **98** and **120** and transmit local oscillations **96** and **108**.

The antenna system **54** includes a first antenna structure **230** enabled in accordance with the first operational parameters **188** to transceive the first inbound and outbound RF signals **92** and **94** and a second antenna structure **232** enabled in accordance with the second operational parameters **236** to transceive the second inbound and outbound RF signals **110** and **118**.

In another embodiment, the processing module **180** is coupled to determine whether the wireless communication device **50** is in at least one of: a wireless wide area network (WWAN) mode and a wireless local area network (WLAN) mode. Such a determination may be made based on signals being transceived and/or based on a user input to select the mode.

When the wireless communication device **50** is in the WWAN mode, the processing module **180** converts outbound data **70** into a first outbound symbol stream **74** in accordance with a WWAN protocol and converts a first inbound symbol stream **94** into inbound data **76** in accordance with the WWAN protocol. When the wireless communication device is in the WLAN mode, the processing module **180** converts the outbound data **70** into a second outbound symbol stream **110** in accordance with a WLAN protocol and converts a second inbound symbol stream **126** into the inbound data **72** in accordance with the WLAN protocol.

In this embodiment, the transceiver section **182** is coupled to convert a first inbound RF signal **94** into the first inbound symbol stream **76** in accordance with a first local oscillation **186** and convert the first outbound symbol stream **74** into a first outbound RF signal **92** in accordance with the first local oscillation **186** when the wireless communication device is in the WWAN mode. When the wireless communication device **50** is in the WLAN mode, the transceiver section **182** converts a second inbound RF signal **118** into the second inbound symbol stream **126** in accordance with a second local oscillation **234** and converts the second outbound symbol stream **106** into a second outbound RF signal **110** in accordance with the second local oscillation **234**.

Also in this embodiment, the antenna system **54** includes a WWAN antenna structure **230** (e.g., GSM, EDGE, GPRS, WCDMA, CDMA, HSDPA, HSUPA, DVB-H, DMB, GPS, and/or FM antenna structure) and a WLAN antenna structure **194** or **232** (e.g., IEEE 802.11x antenna structure, FFC antenna structure). When the wireless communication device **50** is in the WWAN mode, the WWAN antenna structure **230** is enabled to transceive the first inbound and outbound RF signals **92** and **94**. When the wireless communication device **50** is in the WLAN mode, the WLAN antenna structure **232** is enabled to transceive the second inbound and outbound RF signals **110** and **118**. Note that an antenna element of at least one of the WWAN antenna structure and the WLAN antenna structure may be located on a package substrate of the integrated circuit **52**.

In another embodiment, the processing module **180** determines that the wireless communication device **50** is in a wireless personal area network (WPAN) mode. When the wireless communication device **50** is in the WPAN mode, the processing module **180** functions to convert the outbound data into a third outbound symbol stream in accordance with a WPAN protocol and to convert a third inbound symbol stream into the inbound data in accordance with the WPAN protocol. Note that the WPAN communication protocol may be in accordance with Bluetooth, ZigBee, IEEE 802.15x, and/or NFC protocols.

In this embodiment, the RF transceiver section **182** convert a third inbound RF signal into the third inbound symbol stream in accordance with a third local oscillation and convert the third outbound symbol stream into a third outbound RF signal in accordance with the third local oscillation. The antenna system **54** further includes a WPAN antenna structure **196** that is enabled to transceive the third inbound and outbound RF signals when the wireless communication device **50** is in the WPAN mode.

In another embodiment, the processing module **180** determines that the wireless communication device **50** is in a global position system (GPS) mode. In this mode, the processing module converts a plurality of inbound GPS signals into the inbound data in accordance with the GPS protocol. The RF transceiver section **182** converts a plurality of inbound GPS RF signals into the plurality of inbound GPS signals.

In this mode, the antenna system **54** includes a GPS antenna structure **198**. In the GPS mode, the GPS antenna structure **198** is enabled to receive the plurality of inbound GPS RF signals.

In another embodiment, the processing module **180** determines that the wireless communication device **50** is in a radio frequency identification (RFID) mode. In this mode, the processing module **180** converts the outbound data into a fourth outbound symbol stream in accordance with a RFID protocol and converts a fourth inbound symbol stream into the inbound data in accordance with the RFID protocol.

In this mode, the RF transceiver section **182** converts a fourth inbound RF signal into the fourth inbound symbol stream in accordance with a fourth local oscillation and converts the fourth outbound symbol stream into a fourth outbound RF signal in accordance with the fourth local oscillation. The antenna system **54** includes an RFID antenna structure, wherein, when the wireless communication device is in the RFID mode, the RFID antenna structure is enabled to transceive the fourth inbound and outbound RF signals. Note that, in one embodiment, the RFID antenna structure includes a coil for near field communication of the fourth inbound and outbound RF signals.

In yet another embodiment, the processing module **180** generate the operational parameters **188** and/or **236** to include a frequency hopping pattern within a given frequency band. As such, the antenna system **54** adjusts its center frequency in accordance with the frequency hopping pattern to provide a plurality of inbound RF signals to the transceiver section **182**.

The transceiver section **182** converts the plurality of inbound RF signals into a plurality of inbound symbol streams.

The processing module **180** receives the plurality of inbound symbol streams in accordance with the frequency hopping pattern and oversamples them to produce a plurality of oversampled inbound symbol streams. The processing module **180** then combines the plurality of oversampled inbound symbol streams to produce a combined oversampled symbol stream. The combining may be done in accordance with an averaging function, a mean square function, with weighting of the symbol streams, and/or any other way to mathematically combine signals. The processing module **180** then converts the combined oversampled symbol stream into the inbound data **72** or **128**.

FIG. **14** is a diagram of another embodiment of an antenna system **54** that includes a plurality of first antennas **240**, **242**, **244**, and **246** having a first orthogonal orientation therebetween **246** and a plurality of second antennas **250**, **252**, **254**, and **256** having a second orthogonal orientation therebetween **258**. In this embodiment, the plurality of second antennas is interspersed with the plurality of first antennas.

In an embodiment, the antenna system **54** includes a plurality of transmit planer antennas **250**, **252**, **254**, and **256** and a plurality of receive planer antennas **240**, **242**, **244**, and **246** on a supporting structure. The supporting substrate may be an integrated circuit package substrate such as a printed circuit board (PCB), a PCB, a low temperature co-fired ceramic (LTCC) substrate, or an organic substrate.

The plurality of transmit planer antennas (e.g., the third, fourth, seventh, and/or eighth antennas **250**, **252**, **254**, and **256**) have a plurality of transmit axial orientations **258**, where each of the transmit planer antennas is positioned in accordance with a corresponding one of the transmit axial orientations **258**. Each of the transmit planer antennas has a conductive antenna pattern on at least the first surface of the supporting substrate **230**. For example, the conductive antenna pattern may be a meandering line on the first surface, a metal trace on the first surface, a coil on the first surface, and/or a planer helical antenna as described in co-pending patent application entitled PLANER HELICAL ANTENNA, having a filing date of Mar. 21, 2006, and a Ser. No. 11/386,247.

The plurality of receive planer antennas (e.g., the first, second, fifth, and sixth antennas **240**, **242**, **244**, and **246**) have a plurality of receive axial orientations **248**, where each of the receive planer antennas is positioned in accordance with a corresponding one of the receive axial orientations **248**. Each of the plurality of receive planer antennas has the conductive antenna pattern on the first surface of the supporting substrate. For example, the conductive antenna pattern may be a meandering line on the first surface, a metal trace on the first surface, a coil on the first surface, and/or a planer helical antenna as described in co-pending patent application entitled PLANER HELICAL ANTENNA, having a filing date of Mar. 21, 2006, and a Ser. No. 11/386,247.

FIG. **15** is a schematic block diagram of another embodiment of an antenna system **54** that includes the plurality of first antennas **240**, **242**, **244**, and **246**, the plurality of second antennas **250**, **252**, **254**, and **256**, a receive module, and a transmit module. In general, the receive module is coupled to the plurality of first antennas and combines RF signals received by the plurality of first antennas to produce the inbound RF signal. Also in general, the transmit module generates a plurality of outbound RF signals from the outbound RF signal that have an orthogonal phase relationship therebetween and provides the plurality of outbound RF signals to the plurality of second antennas.

In this embodiment, the receive module includes a plurality of hybrid circuits **260**, **262**, and **268** coupled to an LNA module **272** and the transmit module includes a plurality of hybrid circuits **264**, **266**, and **270** coupled to a PA module **274**.

The first hybrid circuit module **260** is coupled to produce a first phase combined receive RF signal (e.g., 0°) from a first phase shifted receive RF signal (e.g., 0°) received from the 1st antenna **240** and a second phase shifted receive RF signal (e.g., 180°) received from the 5th antenna **244**. For example, the first hybrid circuit **260** may perform the function of $\cos(2\pi\omega_{RF}+0)-\cos(2\pi\omega_{RF}+180)$.

The second hybrid circuit module **262** is coupled to produce a second phase combined receive RF signal (e.g., 270°) from a third phase shifted receive RF signal (e.g., 270°) received from the 2nd antenna **242** and a fourth phase shifted receive RF signal (e.g., 90°) received from the 6th antenna **246**. For example, the second hybrid circuit **262** may perform the function of $\cos(2\pi\omega_{RF}+270)-\cos(2\pi\omega_{RF}+90)$.

The third hybrid circuit module **268** is coupled to produce a receive RF signal from the first and second phase combined receive RF signals, i.e., the outputs of the first and second hybrid circuits **260** and **262**. In one embodiment, the third hybrid circuit **268** performs the function of $\cos(2\pi\omega_{RF}+0)+$ 90° phase shift of $[\cos(2\pi\omega_{RF}+270)]$. The received RF signal is then amplified by the LNA module **272**.

On the transmit side, the PA module **280** is coupled to amplify an outbound RF signal to produce an amplified RF signal. The first hybrid circuit module **270** is coupled to produce a first phase shifted transmit RF signal (e.g., 90°) from a transmit RF signal (i.e., the amplified RF signal). The first hybrid circuit module **270** provides the transmit RF signal (e.g., 0°) to the second hybrid circuit module **264** and the first phase shifted transmit RF signal to the third hybrid circuit module **266**. In one embodiment, the first hybrid circuit module **270** functions to add a 90° phase offset to the transmit RF signal (e.g., $\cos(2\pi\omega_{RF})$) to produce the first phase shifted transmit RF signal (e.g., $\cos(2\pi\omega_{RF}+90)$) and passes the transmit RF signal through a delay that substantially matches the time it takes to add the 90° phase offset.

The second hybrid circuit module **264** is coupled to produce a second phased shifted transmit RF signal (e.g., 180°) from the transmit RF signal (e.g., 0°). The second hybrid circuit module **264** provides the transmit RF signal (e.g., 0°) to the third antenna **250** and provides the second phase shifted transmit RF signal (e.g., 180°) to the 7th antenna **254**. In one embodiment, the second hybrid circuit module **264** inverts the transmit RF signal (e.g., $\cos(2\pi\omega_{RF})$ to produce the second phase shifted transmit RF signal (e.g., $\cos(2\pi\omega_{RF}+180)$) and passes the transmit RF signal through a delay that substantially matches the time it takes to invert the signal.

The third hybrid circuit module **266** is coupled to produce a third phase shifted transmit RF signal (e.g., 270°) from the first phase shifted transmit RF signal (e.g., 90°). The third hybrid circuit module **266** provides the third phase shifted transmit RF signal (e.g., 270°) to the 8th antenna **256** and provides the first phase shifted transmit RF signal (e.g., 90°) to the 4th antenna **252**. In one embodiment, the third hybrid circuit module **266** inverts the first phase shifted transmit RF signal (e.g., $\cos(2\pi\omega_{RF}+90)$ to produce the third phase shifted transmit RF signal (e.g., $\cos(2\pi\omega_{RF}+270)$) and passes the first phase shifted transmit RF signal through a delay that substantially matches the time it takes to invert the signal.

FIG. **16** is a diagram of an embodiment of a wireless communication device **50** that includes a battery **280**, a communication device case **282**, and a plurality of antenna segments **210-214**. In this embodiment, the battery **280** is coupled to provide power to the IC **52** and at least a portion of

the antenna system **54** (e.g., an antenna segment **210-214**) is located proximal to the battery **280**. In such an embodiment, the battery **280** functions as a ground plane for the at least a portion of the antenna system **54**.

FIG. **17** is a schematic block diagram of another embodiment of an antenna system **54** that includes an antenna **290**, a transmission line **292**, an inductor module **294**, a tunable capacitor module **296**, and control logic **298**. The antenna **290** may include one or more antenna segments as previously discussed with reference to FIGS. **9-12**, may include a dipole antenna, a mono-pole antenna, a diversity antenna structure, an orthogonal antenna structure and/or a combination thereof.

The transmission line **292** provides coupling between the antenna **290** and the rest of the antenna system **54**. The transmission line **292** may be a shielded trace on a PCB, on a package substrate of the IC **52**, may be a coaxial cable implemented on the IC **52**, on the package substrate, and/or on the PCB using micro-electromechanical (MEM) technique and/or a combination thereof. The properties (impedance, frequency response, bandwidth, etc.) of the transmission line **292** may be fixed and/or adjustable in accordance with the operational parameters **188** and/or **236**.

The inductor module **294** is coupled to the transmission line **292** and to the tunable capacitor module **296**. The opposite end of the inductor module **294**, which includes one or more fixed and/or variable inductors, provides the connection node to the transceiver section **182**. The tunable capacitor module **296**, which includes one or more fixed and/or adjustable capacitors, a capacitor matrix, and/or a capacitor switching network, is adjusted in accordance with a capacitance control signal to provide a desired capacitance. In this manner, the inductance of the inductor module **294** in combination with the desired capacitance tunes the antenna system **54** to provide a desired center frequency, a desired quality factor, a desired impedance, a desired bandwidth, a desired frequency response, a and/or desired gain.

The control logic **298** generates the capacitance control signal based on the operational parameters **188** and/or **236**. For example, the control logic **298** may be a state machine coded to convert a particular setting of the operational parameters **188** and/or **236** into a particular setting of the capacitor control signal.

In another embodiment, the inductor module **294** includes an inductor to provide a first inductance and a tunable inductor circuit, which may include an adjustable inductor, an inductor matrix, a switching inductor network and/or a combination thereof. The tunable inductor circuit is coupled to provide a second inductance in accordance with an inductance control signal. In this embodiment, the control logic **298** generates the inductance control signal in accordance with the operational parameter **188** and/or **236**. The resulting inductance (e.g., the first and second inductances) in combination with the capacitance of the tunable capacitor module **296** provides the tuning of the antenna system **54**. Note that in one embodiment, adjusting of the capacitor module **296** adjusts the center frequency of the antenna system **54** and adjusting of the inductor module **294** adjusts the bandwidth of the antenna system **54**.

In an embodiment, the wireless communication device **50** includes the IC **52** and a printed circuit board (PCB). The IC **52** includes the processing module **180**, the transceiver section **182**, the control logic **298**, the tunable capacitor module **296**, and the tunable inductor circuit of the inductor module **294**. The PCB supports the integrated circuit **52** and the inductor of the inductor module **294**. The antenna **290** is printed on the printed circuit board. Such a wireless communication device may be incorporated into another device (e.g., PC, cell phone, etc.).

In another embodiment, the wireless communication device **50** includes an IC **52** and a PCB. In this embodiment, the IC **52** includes a package board and a die. The die includes the processing module **180**, the transceiver section **182**, the control logic **298**, and the tunable capacitor module **296**. The package board includes the tunable inductor circuit and the inductor of the inductor module **294**. The printed circuit board supports the integrated circuit and the antenna **290**.

FIG. **18** is a schematic block diagram of another embodiment of a wireless communication device **50** that includes an IC **52-2** and an antenna system **54**. The IC **52-2** functions as previously discussed with reference to FIG. **7** and the antenna system **54** functions as previously discussed with reference to FIG. **17**.

FIG. **19** is a schematic block diagram of another embodiment of a wireless communication device **50** that includes an IC **52-1** and an antenna system **54**. In this embodiment, the IC **52-1** includes the processing module **180**, the control logic of the antenna system **54**, and the tunable capacitor module **296** of the antenna system. The processing module **180** functions as previously discussed with reference to FIGS. **8** and **13**. The antenna system **54** functions as previously described with reference to FIG. **17**.

As may be used herein, the terms "substantially" and "approximately" provides an industry-accepted tolerance for its corresponding term and/or relativity between items. Such an industry-accepted tolerance ranges from less than one percent to fifty percent and corresponds to, but is not limited to, component values, integrated circuit process variations, temperature variations, rise and fall times, and/or thermal noise. Such relativity between items ranges from a difference of a few percent to magnitude differences. As may also be used herein, the term(s) "coupled to" and/or "coupling" includes direct coupling between items and/or indirect coupling between items via an intervening item (e.g., an item includes, but is not limited to, a component, an element, a circuit, and/or a module) where, for indirect coupling, the intervening item does not modify the information of a signal but may adjust its current level, voltage level, and/or power level. As may further be used herein, inferred coupling (i.e., where one element is coupled to another element by inference) includes direct and indirect coupling between two items in the same manner as "coupled to". As may even further be used herein, the term "operable to" indicates that an item includes one or more of power connections, input(s), output (s), etc., to perform one or more its corresponding functions and may further include inferred coupling to one or more other items. As may still further be used herein, the term "associated with", includes direct and/or indirect coupling of separate items and/or one item being embedded within another item. As may be used herein, the term "compares favorably", indicates that a comparison between two or more items, signals, etc., provides a desired relationship. For example, when the desired relationship is that signal **1** has a greater magnitude than signal **2**, a favorable comparison may be achieved when the magnitude of signal **1** is greater than that of signal **2** or when the magnitude of signal **2** is less than that of signal **1**.

The present invention has also been described above with the aid of method steps illustrating the performance of specified functions and relationships thereof. The boundaries and sequence of these functional building blocks and method steps have been arbitrarily defined herein for convenience of description. Alternate boundaries and sequences can be

defined so long as the specified functions and relationships are appropriately performed. Any such alternate boundaries or sequences are thus within the scope and spirit of the claimed invention.

The present invention has been described above with the aid of functional building blocks illustrating the performance of certain significant functions. The boundaries of these functional building blocks have been arbitrarily defined for convenience of description. Alternate boundaries could be defined as long as the certain significant functions are appropriately performed. Similarly, flow diagram blocks may also have been arbitrarily defined herein to illustrate certain significant functionality. To the extent used, the flow diagram block boundaries and sequence could have been defined otherwise and still perform the certain significant functionality. Such alternate definitions of both functional building blocks and flow diagram blocks and sequences are thus within the scope and spirit of the claimed invention. One of average skill in the art will also recognize that the functional building blocks, and other illustrative blocks, modules and components herein, can be implemented as illustrated or by discrete components, application specific integrated circuits, processors executing appropriate software and the like or any combination thereof.

What is claimed is:

1. A wireless communication device comprises:

a processing module coupled to:

establish a wireless communication protocol in accordance with one of a plurality of operational modes of the wireless communication device;

convert outbound data into an outbound symbol stream in accordance with the wireless communication protocol;

convert an inbound symbol stream into inbound data in accordance with the wireless communication protocol; and

establish operational parameters based on the wireless communication protocol; and

a transceiver section coupled to:

convert an inbound RF signal into the inbound symbol stream in accordance with the operational parameters and a local oscillation; and

convert the outbound symbol stream into an outbound RF signal in accordance with the operational parameters and the local oscillation; and

an antenna system that includes:

an antenna;

a transmission line coupled to the antenna;

an inductor module coupled to the transmission line, in which the inductor module includes an inductor to provide a first inductance and a tunable inductor circuit coupled to provide a second inductance in accordance with an inductance control signal, wherein the first and second inductances provide an inductance of the inductor module;

a tunable capacitor module coupled to the transmission line in accordance with a capacitance control signal to provide a desired capacitance such that the inductance of the inductor module and the desired capacitance tune the antenna system; and

control logic coupled to generate the inductance control signal and the capacitance control signal based on the operational parameters.

2. The wireless communication device of claim **1**, wherein the processing module further functions to:

generate the operational parameters to include a frequency hopping pattern within a given frequency band, wherein the frequency hopping pattern establishes different center frequencies for the antenna system;

receive a plurality of inbound symbol streams in accordance with the frequency hopping pattern;

oversample the plurality of inbound symbol streams to produce a plurality of oversampled inbound symbol streams;

combine the plurality of oversampled inbound symbol streams to produce a combined oversampled symbol stream; and

convert the combined oversampled symbol stream into the inbound data.

3. The wireless communication device of claim **1**, wherein the processing module further functions to:

generate the operational parameters to include a desired center frequency.

4. The wireless communication device of claim **1**, wherein the processing module further functions to:

generate the operational parameters to include a desired bandwidth.

5. The wireless communication device of claim **1** further comprises:

an integrated circuit that includes the processing module, the transceiver section, the control logic, the tunable capacitor module, and the tunable inductor circuit; and

a printed circuit board that supports the integrated circuit and the inductor, wherein the antenna is printed on the printed circuit board.

6. The wireless communication device of claim **1** further comprises:

an integrated circuit that includes a package board and a die, the die includes the processing module, the transceiver section, the control logic, and the tunable capacitor module, and wherein the package board include tunable inductor circuit and the inductor; and

a printed circuit board that supports the integrated circuit, wherein the antenna is printed on the printed circuit board.

7. A radio frequency (RF) transceiver comprises:

a receiver section coupled to convert an inbound RF signal into the inbound symbol stream in accordance with the operational parameters and a receive local oscillation;

a transmitter section coupled to convert the outbound symbol stream into an outbound RF signal in accordance with the operational parameters and a transmit local oscillation;

a local oscillation module coupled to generate the receive and transmit local oscillations in accordance with a wireless communication protocol;

an antenna system that includes:

an antenna;

a transmission line coupled to the antenna;

an inductor module coupled to the transmission line, in which the inductor module includes an inductor to provide a first inductance and a tunable inductor circuit coupled to provide a second inductance in accordance with an inductance control signal, wherein the first and second inductances provide an inductance of the inductor module;

a tunable capacitor module coupled to the transmission line in accordance with a capacitance control signal to provide a desired capacitance such that the inductance of the inductor module and the desired capacitance tune the antenna system; and

control logic coupled to generate the inductance control signal and the capacitance control signal based on operational parameters.

8. The RF transceiver of claim **7**, wherein the operational parameters comprise:

a desired center frequency; and

a desired bandwidth.

9. The RF transceiver of claim **7** further comprises:

an integrated circuit that includes the receiver section, the transmitter section, the local oscillation module, the control logic, the tunable capacitor module, and the tunable inductor circuit; and

a printed circuit board that supports the integrated circuit and the inductor, wherein the antenna is printed on the printed circuit board.

10. The RF transceiver of claim **7** further comprises:

an integrated circuit that includes a package board and a die, the die includes the receiver section, the transmitter section, the local oscillation module, the control logic, and the tunable capacitor module, and wherein the package board include tunable inductor circuit and the inductor; and

a printed circuit board that supports the integrated circuit, wherein the antenna is printed on the printed circuit board.

11. An integrated circuit (IC) comprises:

a processing module coupled to:

establish a wireless communication protocol in accordance with one of a plurality of operational modes of the wireless communication device;

convert outbound data into an outbound symbol stream in accordance with the wireless communication protocol;

provide the outbound symbol stream to a radio frequency (RF) transceiver;

receive an inbound symbol stream from the RF transceiver;

convert an inbound symbol stream into inbound data in accordance with the wireless communication protocol; and

establish operational parameters based on the wireless communication protocol;

an inductor module that includes an inductor to provide a first inductance and an tunable inductor circuit coupled to provide a second inductance in accordance with an inductance control signal, wherein the first and second inductances provide an inductance of the inductor module;

a tunable capacitor module of an antenna system, wherein the tunable capacitor module provides a desired capacitance such that the inductance of the inductor module of the antenna system and the desired capacitance tune the antenna system; and

control logic coupled to generate the inductance control signal and the capacitance control signal based on the operational parameters.

12. The IC of claim **11**, wherein the processing module further functions to:

generate the operational parameters to include a frequency hopping pattern within a given frequency band, wherein the frequency hopping pattern establishes different center frequencies for the antenna system;

receive a plurality of inbound symbol streams in accordance with the frequency hopping pattern;

oversample the plurality of inbound symbol streams to produce a plurality of oversampled inbound symbol streams;

combine the plurality of oversampled inbound symbol streams to produce a combined oversampled symbol stream; and

convert the combined oversampled symbol stream into the inbound data.

13. The IC of claim **11**, wherein the processing module further functions to:

generate the operational parameters to include a desired center frequency that is adjusted by adjusting the desired capacitance.

14. The IC of claim **13**, wherein the processing module further functions to:

generate the operational parameters to include a desired bandwidth that is adjusted by adjusting the inductance of the inductor module.

* * * * *

UNITED STATES PATENT AND TRADEMARK OFFICE

CERTIFICATE OF CORRECTION

PATENT NO. : 7,764,932 B2
APPLICATION NO. : 11/729162
DATED : July 27, 2010
INVENTOR(S) : Ahmadreza Rofougaran et al.

It is certified that error appears in the above-identified patent and that said Letters Patent is hereby corrected as shown below:

Title Page, Item (60) Related U.S. Application Data: Insert --Provisional application no. 60/906,987 filed on Mar. 14, 2007.--

Signed and Sealed this
Third Day of April, 2012

David J. Kappos

David J. Kappos
Director of the United States Patent and Trademark Office