US010090567B2

(12) **United States Patent**
**Austin**

(10) **Patent No.: US 10,090,567 B2**
(45) **Date of Patent: Oct. 2, 2018**

(54) **VEHICULAR BATTERY CHARGER, CHARGING SYSTEM, AND METHOD**

(76) Inventor: **Christopher B. Austin**, Grafton, WI (US)

( * ) Notice: Subject to any disclaimer, the term of this patent is extended or adjusted under 35 U.S.C. 154(b) by 646 days.

(21) Appl. No.: **12/737,803**

(22) PCT Filed: **Aug. 18, 2009**

(86) PCT No.: **PCT/US2009/054174**

§ 371 (c)(1),
(2), (4) Date: **Feb. 17, 2011**

(87) PCT Pub. No.: **WO2010/022059**

PCT Pub. Date: **Feb. 25, 2010**

(65) **Prior Publication Data**

US 2011/0175569 A1 Jul. 21, 2011

**Related U.S. Application Data**

(60) Provisional application No. 61/189,353, filed on Aug. 18, 2008.

(51) **Int. Cl.**

| | |
|---|---|
| ***H02J 7/00*** | (2006.01) |
| ***H01M 10/44*** | (2006.01) |
| ***B60L 11/18*** | (2006.01) |
| *G01R 31/36* | (2006.01) |

(52) **U.S. Cl.**

CPC ..... ***H01M 10/44*** (2013.01); ***B60L 11/182*** (2013.01); ***B60L 11/1816*** (2013.01); ***B60L 11/1824*** (2013.01); ***B60L 11/1829*** (2013.01); ***B60L 11/1844*** (2013.01); *B60L 2230/12* (2013.01); *B60L 2230/16* (2013.01); *B60L 2230/40* (2013.01); *G01R 31/3689* (2013.01); *H02J 7/0042* (2013.01); *H02J 7/0047* (2013.01); *Y02E 60/721* (2013.01); *Y02T 10/7005* (2013.01); *Y02T 10/7088* (2013.01); *Y02T 90/121* (2013.01); *Y02T 90/122* (2013.01); *Y02T 90/125* (2013.01); *Y02T 90/128* (2013.01);

(Continued)

(58) **Field of Classification Search**

CPC ..... H02J 7/0042; H02J 7/0047; H02J 7/088; H01M 10/44; B60L 11/1824

USPC ..... 320/109

See application file for complete search history.

(56) **References Cited**

U.S. PATENT DOCUMENTS

5,462,439 A * 10/1995 Keith ..... 320/109
5,548,200 A * 8/1996 Nor ..... B60L 11/184 320/106
5,650,710 A 7/1997 Hotta

(Continued)

OTHER PUBLICATIONS

European Search Report, Application No. 09808718.2, dated Oct. 10, 2017.

*Primary Examiner* — Nathaniel Pelton

(57) **ABSTRACT**

A vehicle battery charger and a vehicle battery charging system are described and illustrated, and can include a controller enabling a user to enter a time of day at which the vehicle battery charger or system begins and/or ends charging of the vehicle battery. The vehicle battery charger can be separate from the vehicle, can be at least partially integrated into the vehicle, can include a transmitter and/or a receiver capable of communication with a controller that is remote from the vehicle and vehicle charger, and can be controlled by a user or another party (e.g., a power utility) to control battery charging based upon a time of day, cost of power, or other factors.

**20 Claims, 22 Drawing Sheets**

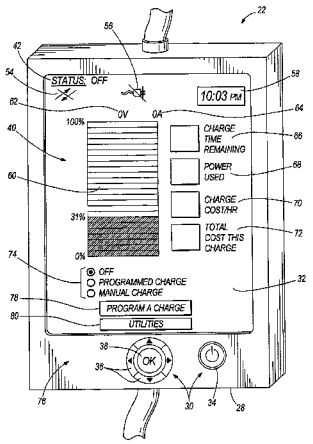




ChargeLogic LLC - **Ex. 2011**
IPR2026-00380
Tesla Inc. v. ChargeLogic LLC

(52) **U.S. Cl.**
CPC ..... *Y02T 90/14* (2013.01); *Y02T 90/16* (2013.01); *Y02T 90/163* (2013.01); *Y04S 10/126* (2013.01)

(56) **References Cited**

U.S. PATENT DOCUMENTS


| | | | | |
|---|---|---|---|---|
| 6,963,186 | B2 * | 11/2005 | Hobbs | 320/128 |
| 6,983,186 | B2 | 1/2006 | Navani et al. | |
| 7,243,746 | B1 * | 7/2007 | Vasant | 180/6.5 |
| 2002/0079868 | A1 * | 6/2002 | Gaza | H02J 7/0031 320/155 |
| 2006/0276938 | A1 * | 12/2006 | Miller | G06Q 50/06 700/295 |
| 2007/0144605 | A1 * | 6/2007 | Horowitz | G06Q 50/30 141/83 |
| 2007/0164704 | A1 * | 7/2007 | McGinley et al. | 320/114 |
| 2008/0007202 | A1 | 1/2008 | Pryor | |
| 2008/0052145 | A1 * | 2/2008 | Kaplan et al. | 705/8 |
| 2008/0156553 | A1 * | 7/2008 | Hoogenraad | B60K 6/48 180/65.29 |
| 2009/0237034 | A1 * | 9/2009 | Lindemann | H02J 9/002 320/136 |
| 2009/0243538 | A1 * | 10/2009 | Kelty | B60L 11/1851 320/104 |
| 2009/0243549 | A1 * | 10/2009 | Matsumura | H01M 10/44 320/155 |
| 2009/0313034 | A1 * | 12/2009 | Ferro | B60L 8/003 705/1.1 |

* cited by examiner

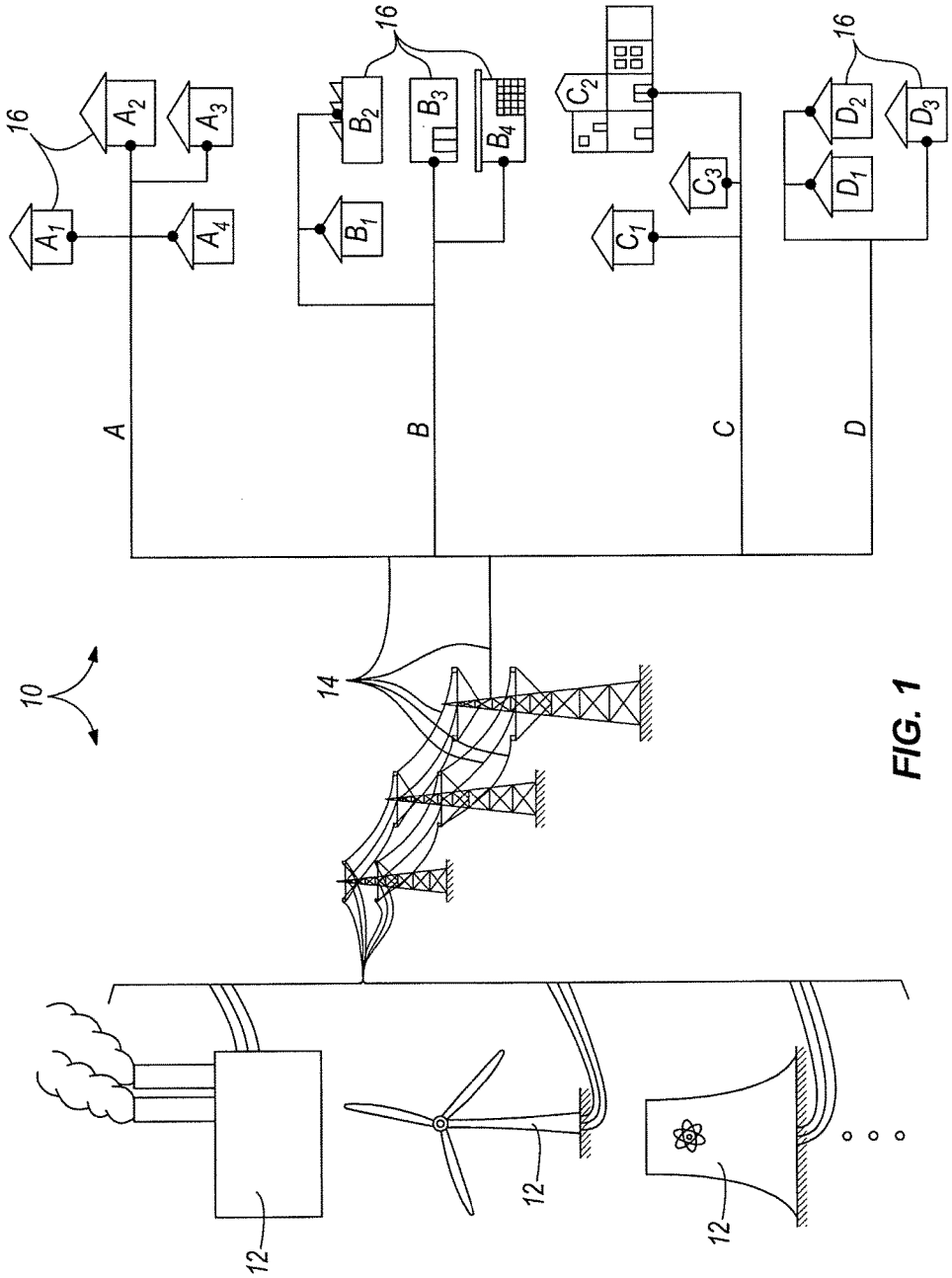


FIG. 1

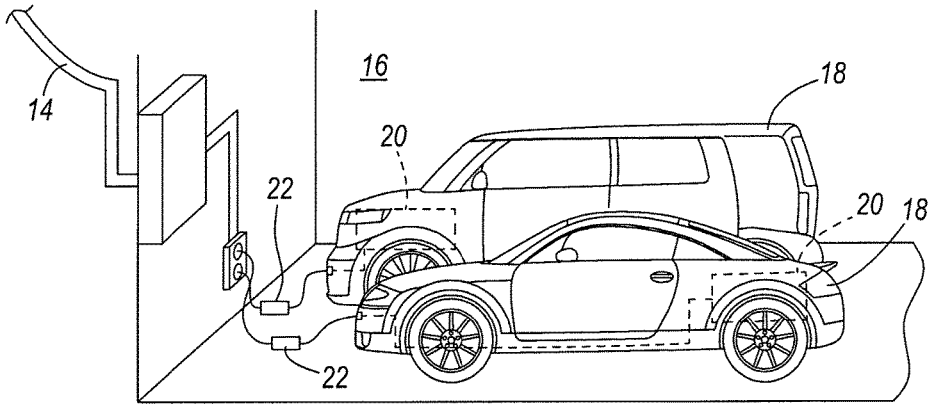


FIG. 2

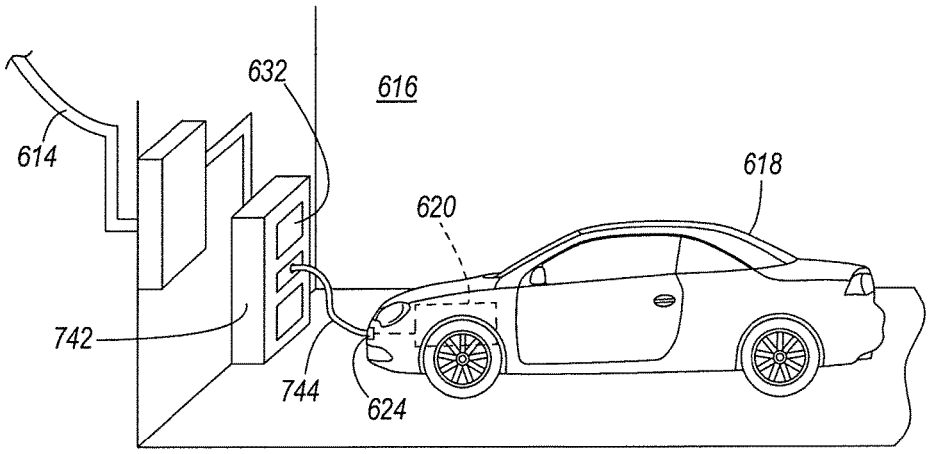


FIG. 3

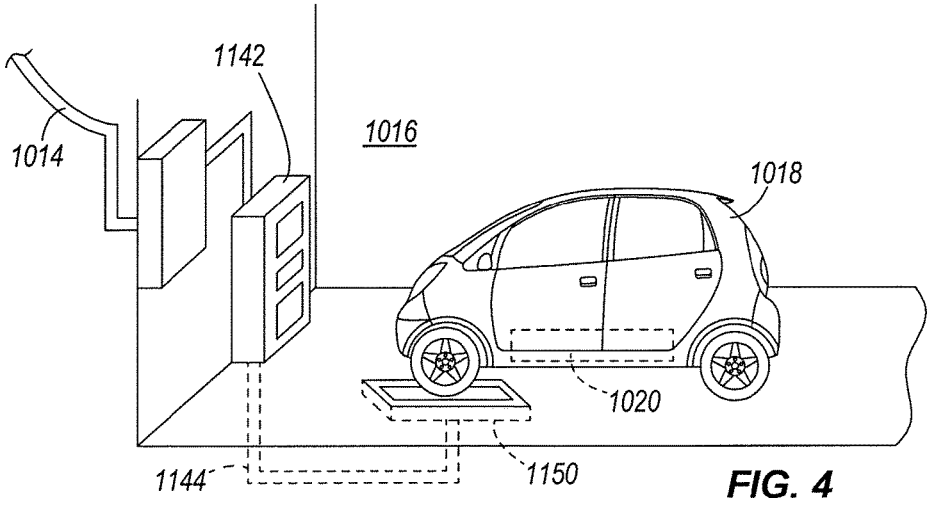


FIG. 4

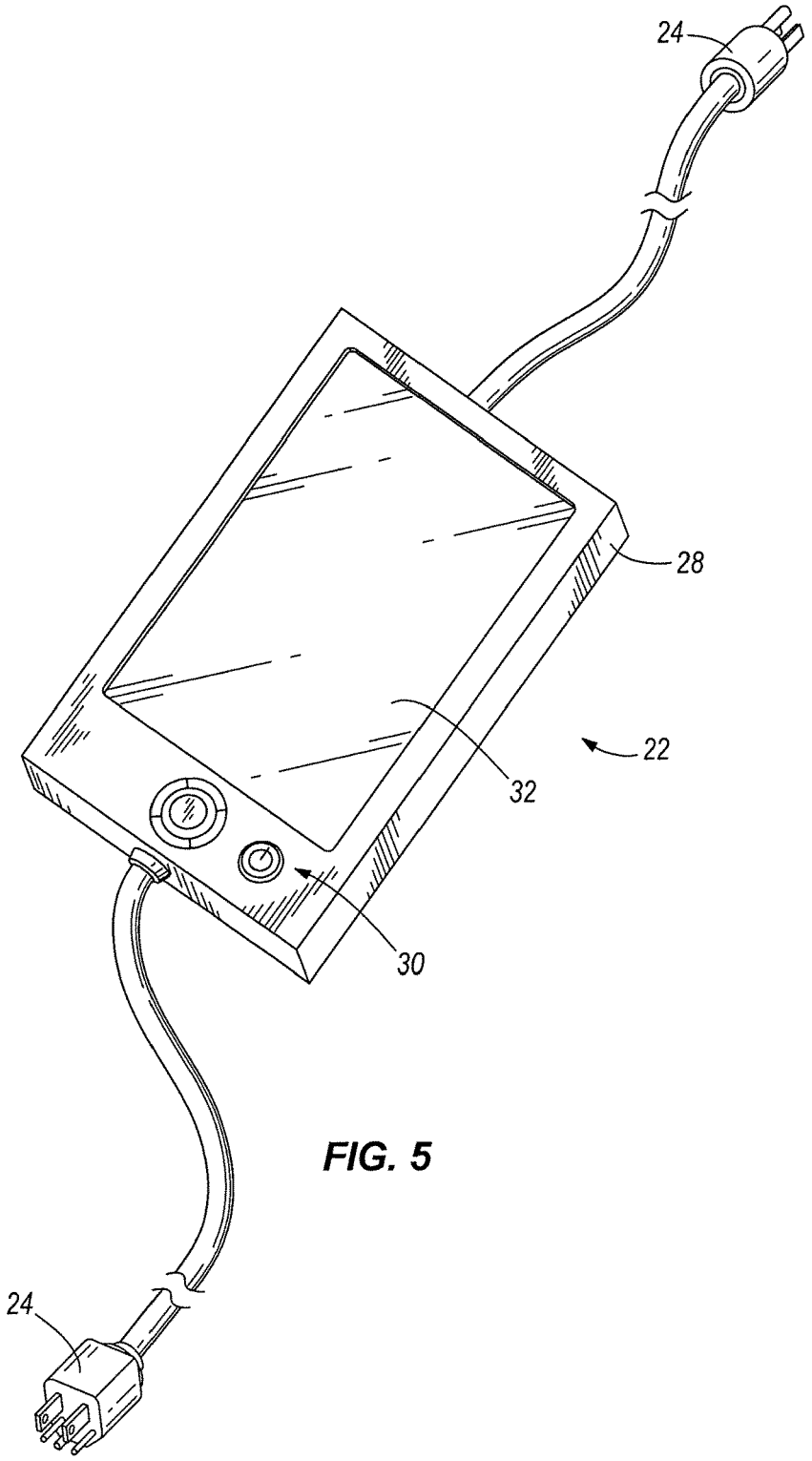


FIG. 5

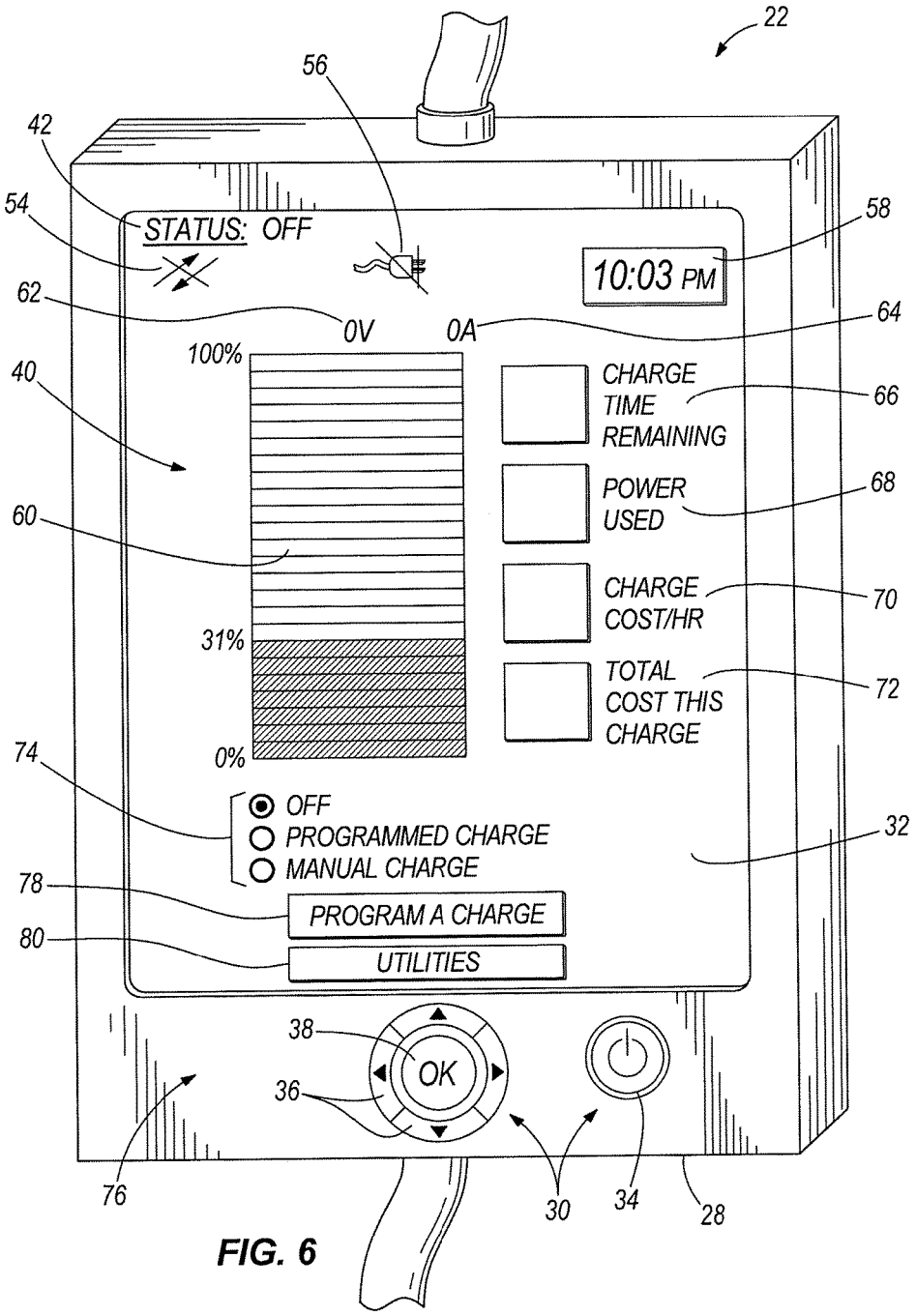
22
56
42
54
STATUS: OFF
58
10:03 PM
62
0V
0A
64
100%
40
CHARGE TIME REMAINING
66
POWER USED
68
60
CHARGE COST/HR
70
31%
TOTAL COST THIS CHARGE
72
0%
74
OFF
PROGRAMMED CHARGE
MANUAL CHARGE
32
78
PROGRAM A CHARGE
80
UTILITIES
38
OK
36
76
30
34
28

FIG. 6

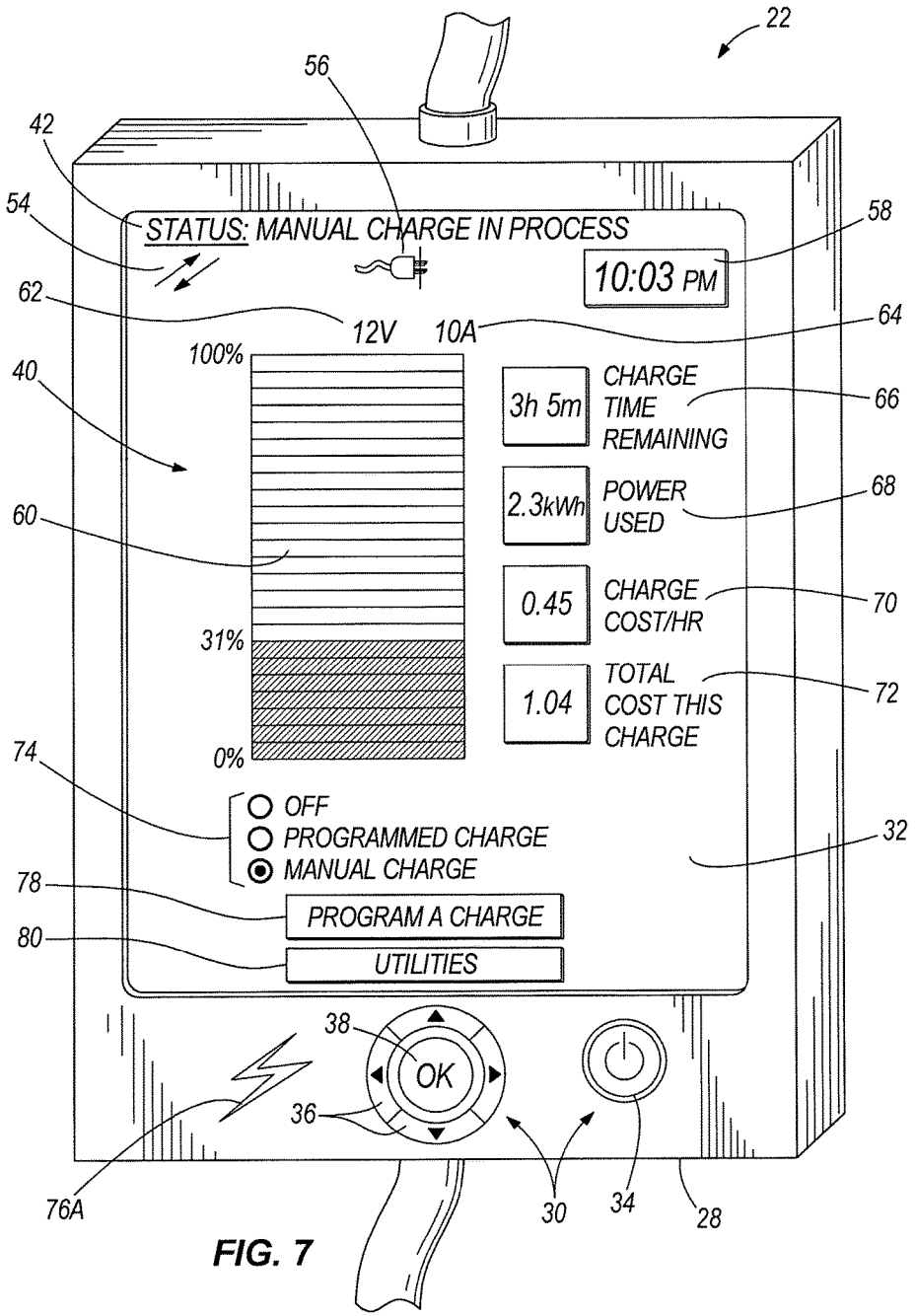
22
56
42
54
STATUS: MANUAL CHARGE IN PROCESS
58
10:03 PM
62
12V
10A
64
100%
40
3h 5m
CHARGE TIME REMAINING
66
60
2.3kWh
POWER USED
68
0.45
CHARGE COST/HR
70
31%
1.04
TOTAL COST THIS CHARGE
72
0%
74
OFF
PROGRAMMED CHARGE
MANUAL CHARGE
32
78
PROGRAM A CHARGE
80
UTILITIES
38
OK
36
76A
30
34
28

FIG. 7

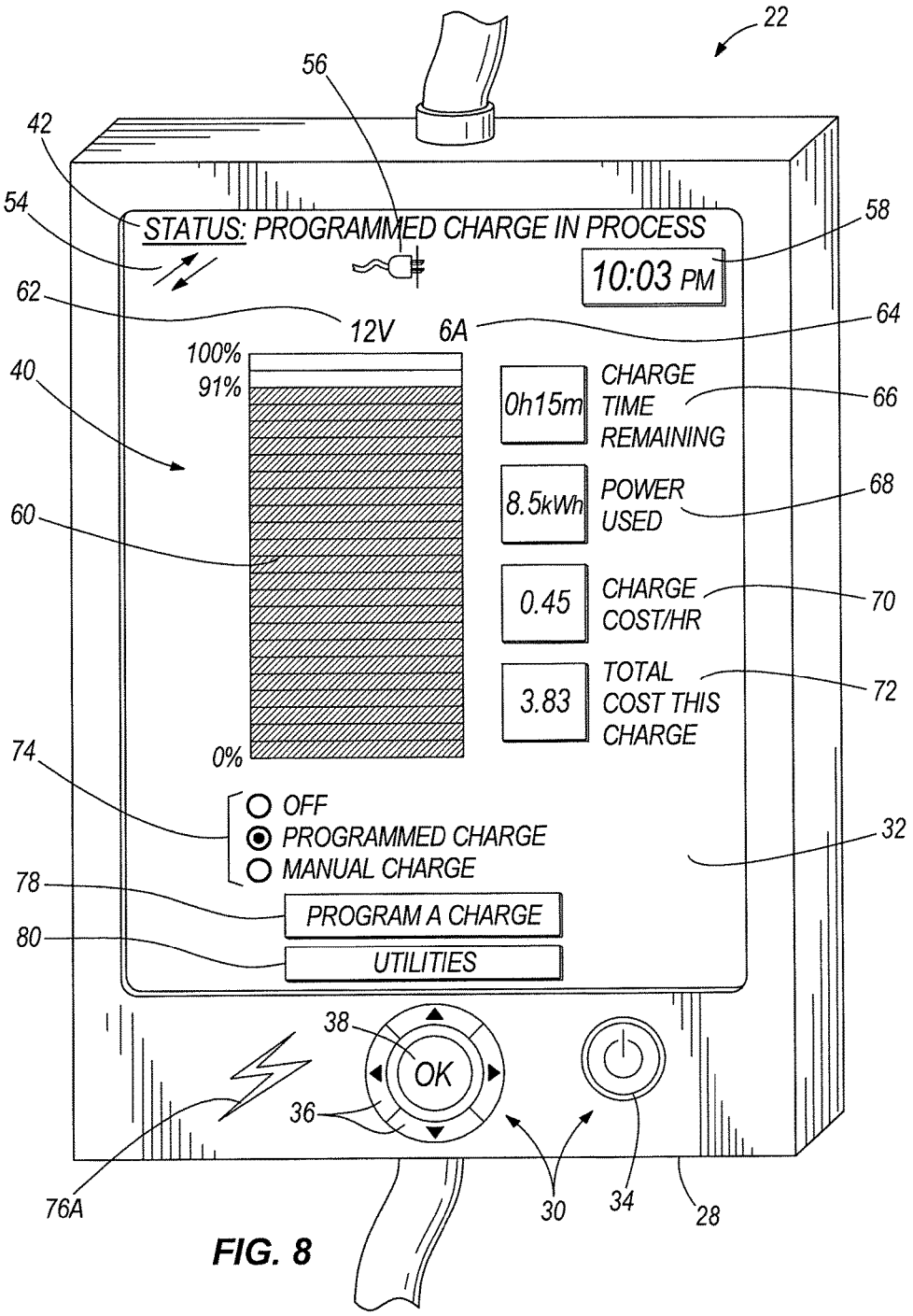
22
56
42
54
58
STATUS: PROGRAMMED CHARGE IN PROCESS
10:03 PM
62
12V
6A
64
100%
91%
40
0h15m
CHARGE TIME REMAINING
66
8.5kWh
POWER USED
68
60
0.45
CHARGE COST/HR
70
3.83
TOTAL COST THIS CHARGE
72
0%
74
OFF
PROGRAMMED CHARGE
MANUAL CHARGE
32
78
PROGRAM A CHARGE
80
UTILITIES
38
OK
36
76A
30
34
28

FIG. 8

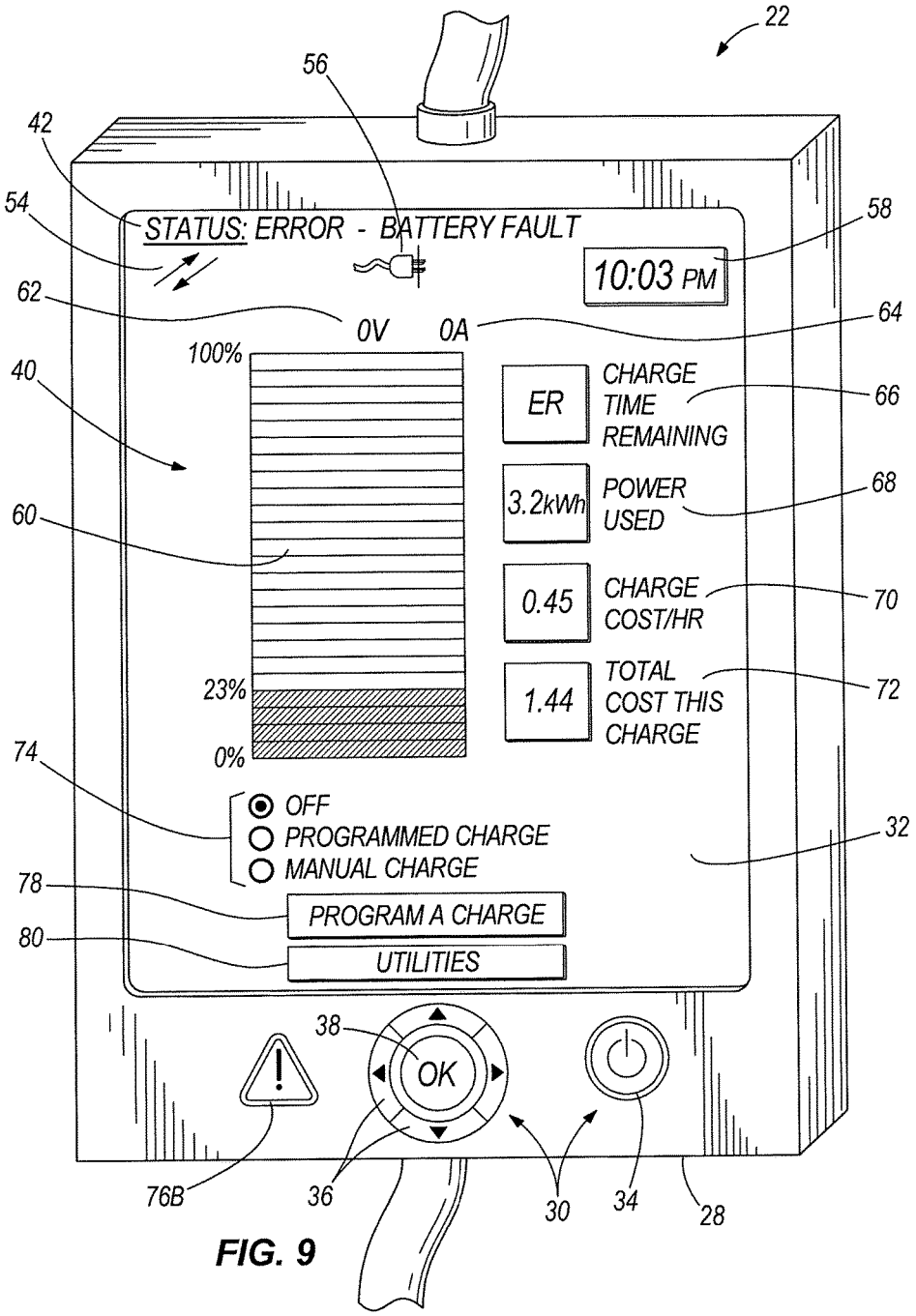
22
56
42
54
STATUS: ERROR - BATTERY FAULT
58
10:03 PM
62
0V
0A
64
100%
40
ER
CHARGE TIME REMAINING
66
3.2kWh
POWER USED
68
60
0.45
CHARGE COST/HR
70
23%
1.44
TOTAL COST THIS CHARGE
72
0%
74
OFF
PROGRAMMED CHARGE
MANUAL CHARGE
32
78
PROGRAM A CHARGE
80
UTILITIES
38
OK
76B
36
30
34
28

FIG. 9

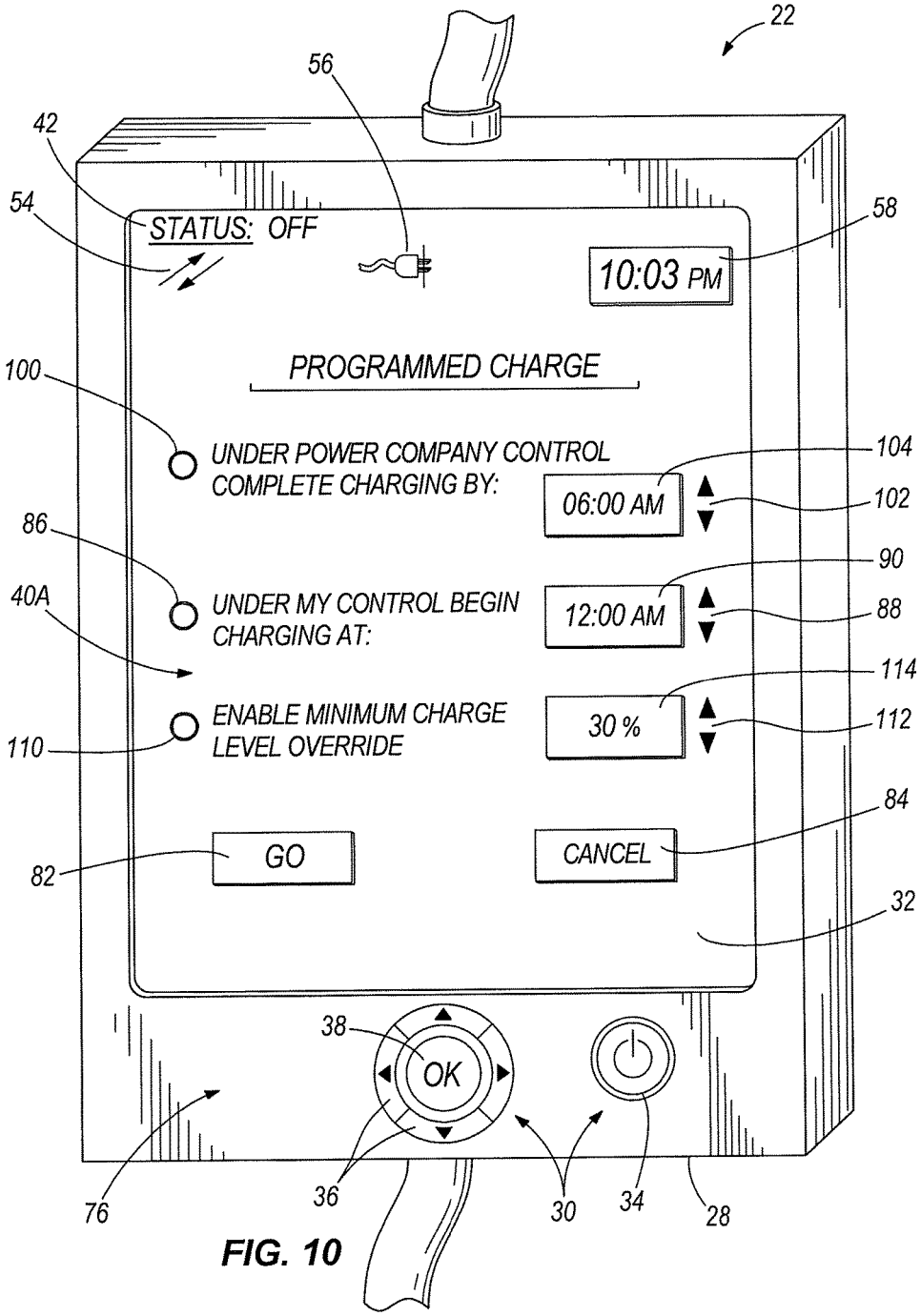
22
56
42
54
STATUS: OFF
58
10:03 PM
PROGRAMMED CHARGE
100
UNDER POWER COMPANY CONTROL
COMPLETE CHARGING BY:
104
06:00 AM
102
86
90
40A
UNDER MY CONTROL BEGIN
CHARGING AT:
12:00 AM
88
114
ENABLE MINIMUM CHARGE
LEVEL OVERRIDE
30 %
112
110
84
82
GO
CANCEL
32
38
OK
76
36
30
34
28

FIG. 10

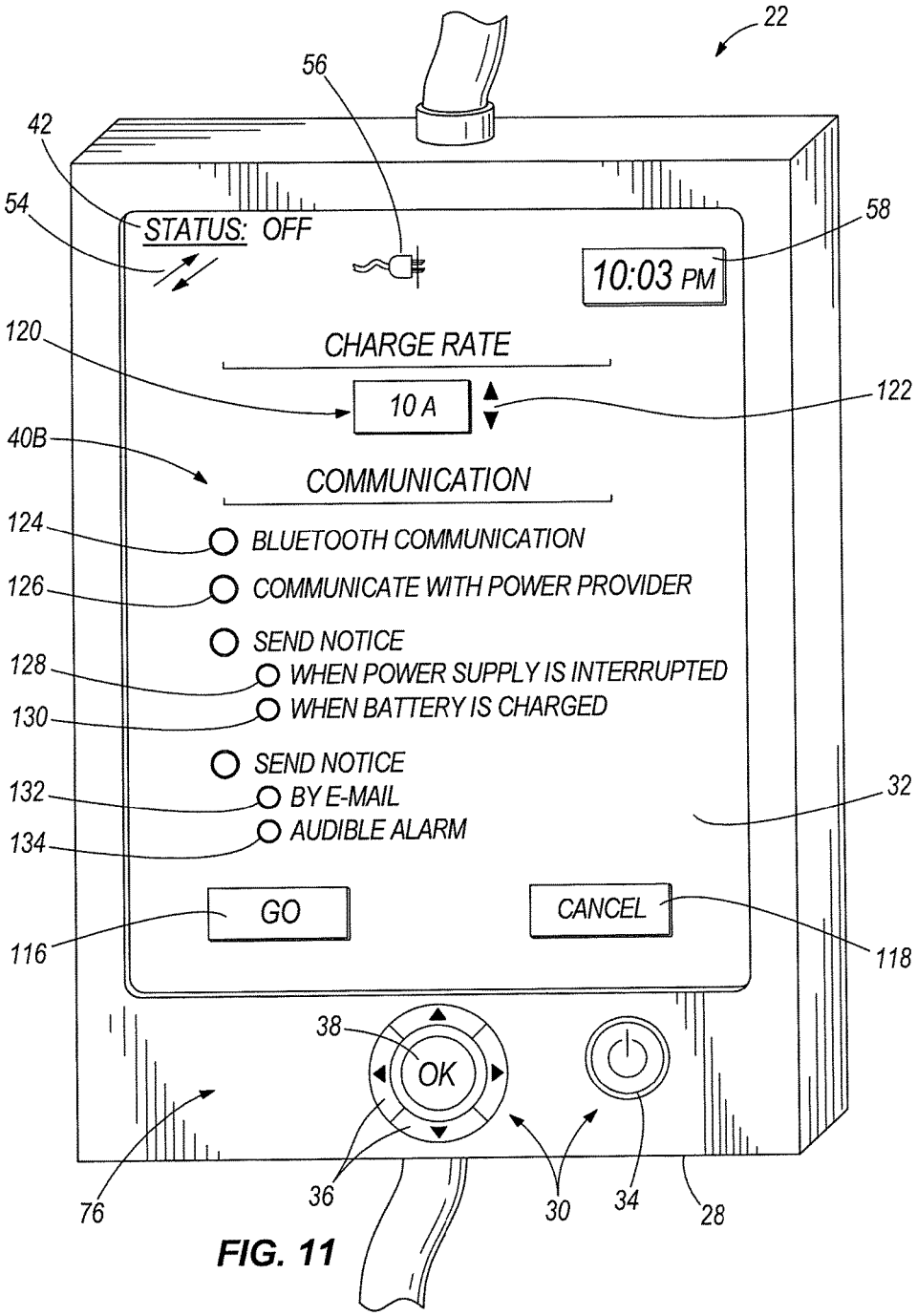
22
56
42
54
STATUS: OFF
58
10:03 PM
120
CHARGE RATE
10 A
122
40B
COMMUNICATION
124
BLUETOOTH COMMUNICATION
126
COMMUNICATE WITH POWER PROVIDER
SEND NOTICE
128
WHEN POWER SUPPLY IS INTERRUPTED
130
WHEN BATTERY IS CHARGED
SEND NOTICE
132
BY E-MAIL
134
AUDIBLE ALARM
32
GO
CANCEL
116
118
38
OK
76
36
30
34
28

FIG. 11

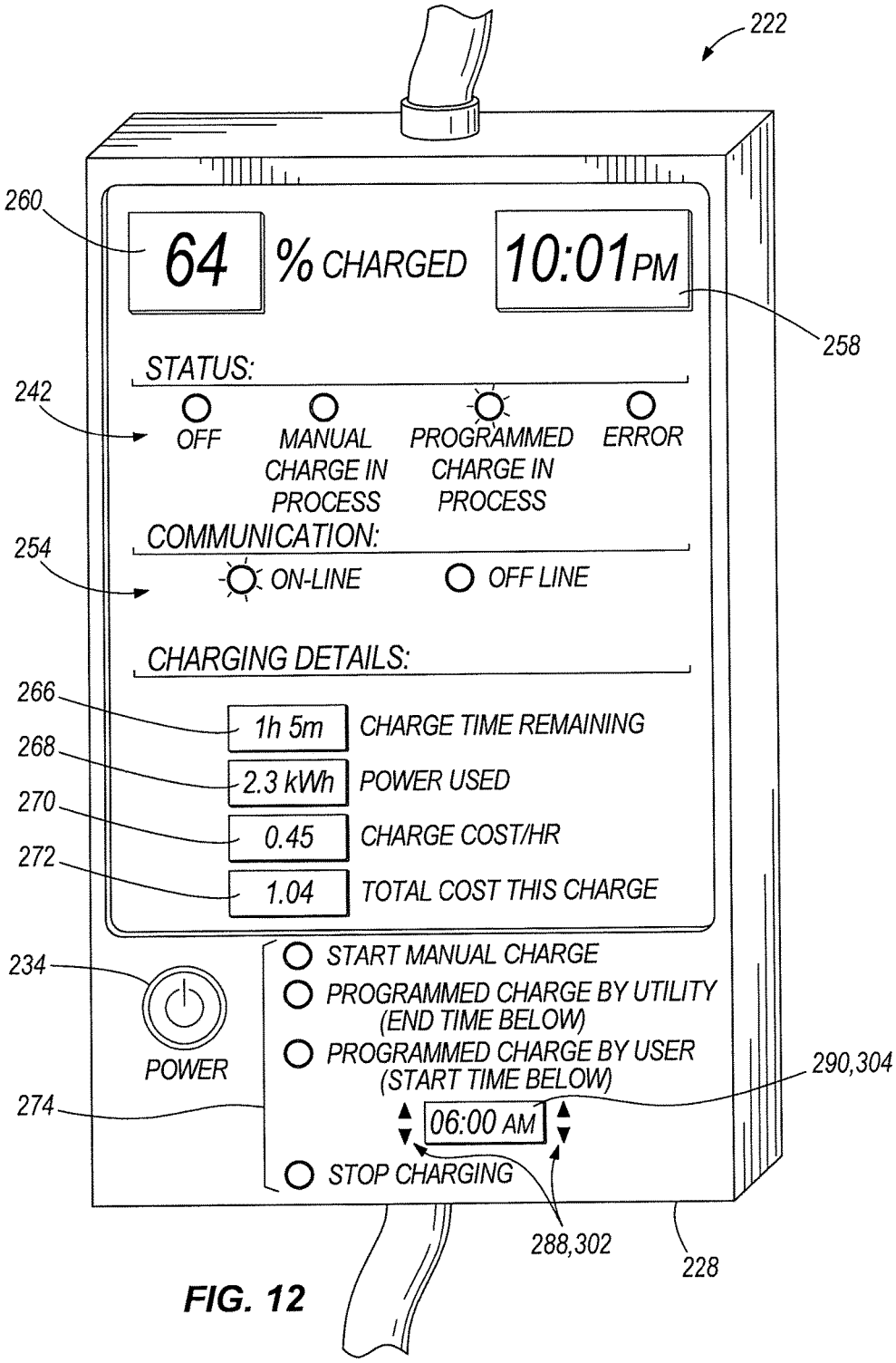
222
260
64
% CHARGED
10:01PM
258
STATUS:
242
OFF
MANUAL CHARGE IN PROCESS
PROGRAMMED CHARGE IN PROCESS
ERROR
COMMUNICATION:
254
ON-LINE
OFF LINE
CHARGING DETAILS:
266
1h 5m
CHARGE TIME REMAINING
268
2.3 kWh
POWER USED
270
0.45
CHARGE COST/HR
272
1.04
TOTAL COST THIS CHARGE
234
POWER
START MANUAL CHARGE
PROGRAMMED CHARGE BY UTILITY (END TIME BELOW)
PROGRAMMED CHARGE BY USER (START TIME BELOW)
290,304
274
06:00 AM
STOP CHARGING
288,302
228

FIG. 12

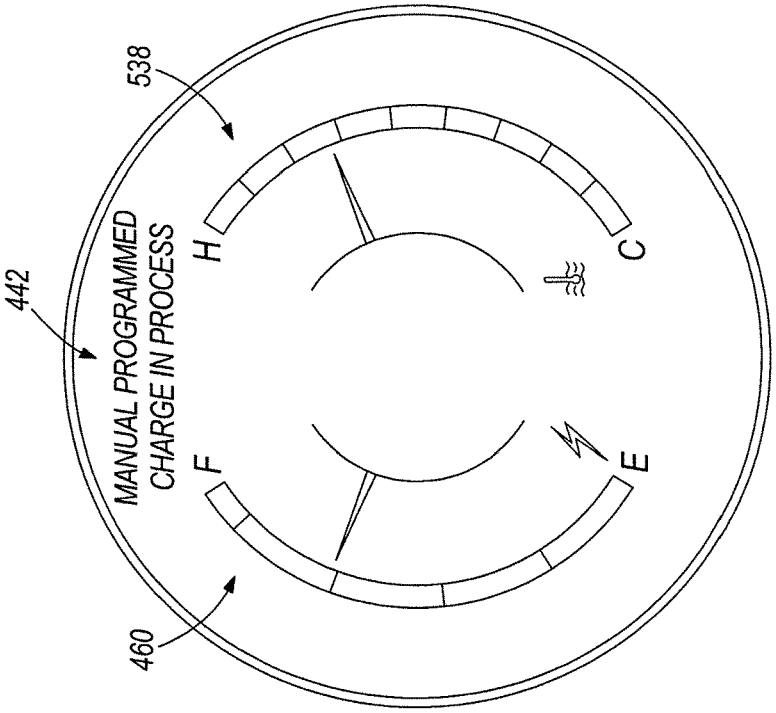
442
MANUAL PROGRAMMED
CHARGE IN PROCESS
460
F
H
538
E
C

FIG. 13

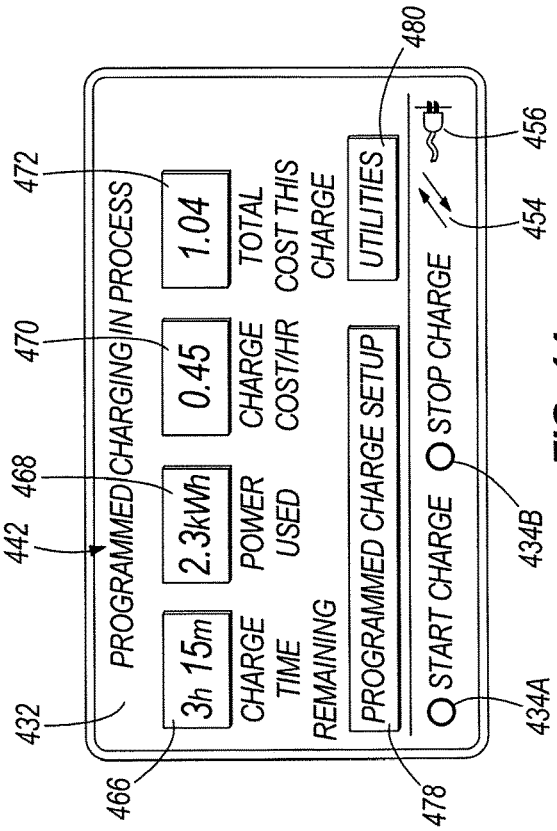
432
442
PROGRAMMED CHARGING IN PROCESS
466
3h 15m
CHARGE TIME REMAINING
468
2.3kWh
POWER USED
470
0.45
CHARGE COST/HR
472
1.04
TOTAL COST THIS CHARGE
478
PROGRAMMED CHARGE SETUP
480
UTILITIES
434A
START CHARGE
434B
STOP CHARGE
454
456

FIG. 14

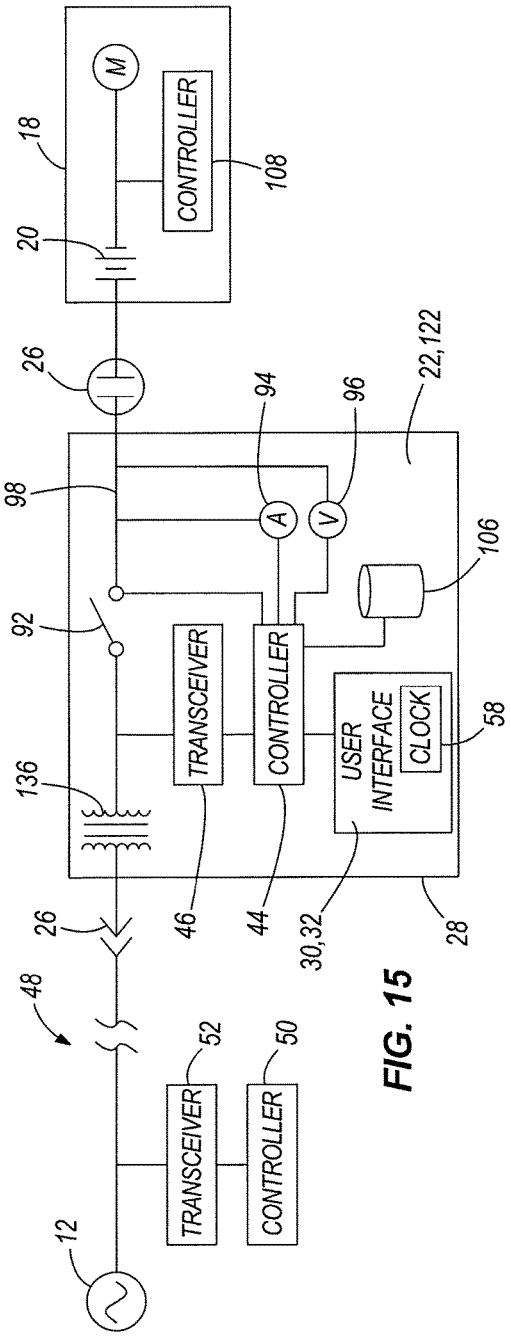
M
CONTROLLER
18
108
20
26
94
96
22,122
98
A
V
106
92
TRANSCEIVER
CONTROLLER
USER INTERFACE
CLOCK
58
136
46
44
30,32
28
26
48
52
50
TRANSCEIVER
CONTROLLER
12

FIG. 15

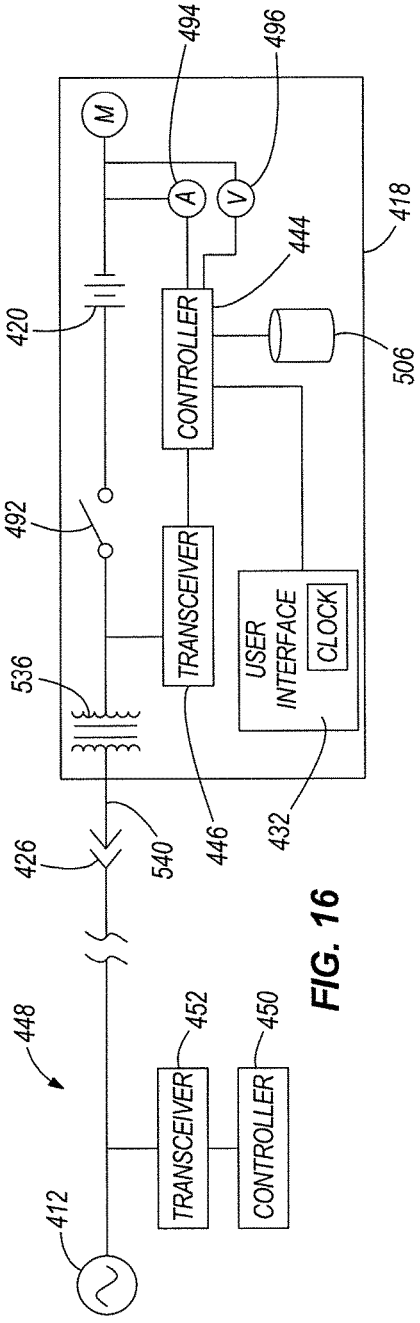
494
496
M
A
V
418
444
420
CONTROLLER
506
492
TRANSCEIVER
USER INTERFACE
CLOCK
536
426
540
446
432
448
452
450
TRANSCEIVER
CONTROLLER
412

FIG. 16

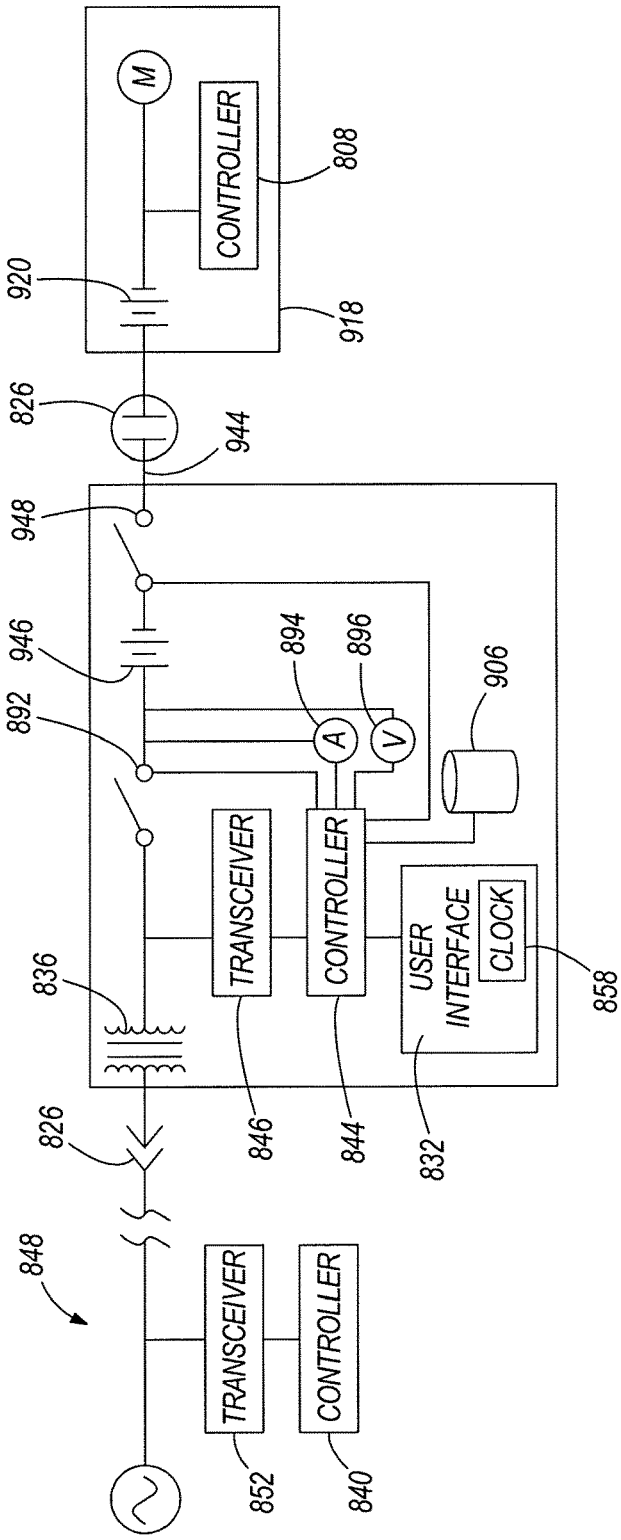
M
CONTROLLER
808
920
918
826
944
948
946
894
896
906
892
A
V
TRANSCEIVER
CONTROLLER
USER INTERFACE
CLOCK
858
836
826
846
844
832
848
TRANSCEIVER
CONTROLLER
852
840

FIG. 17

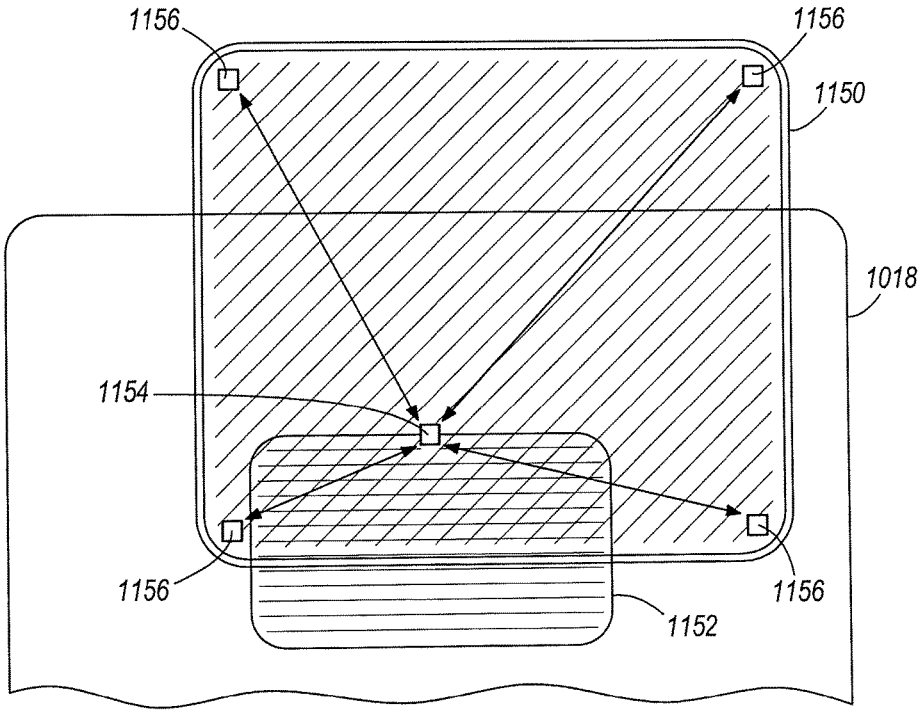
1156
1156
1150
1018
1154
1156
1156
1152

FIG. 18

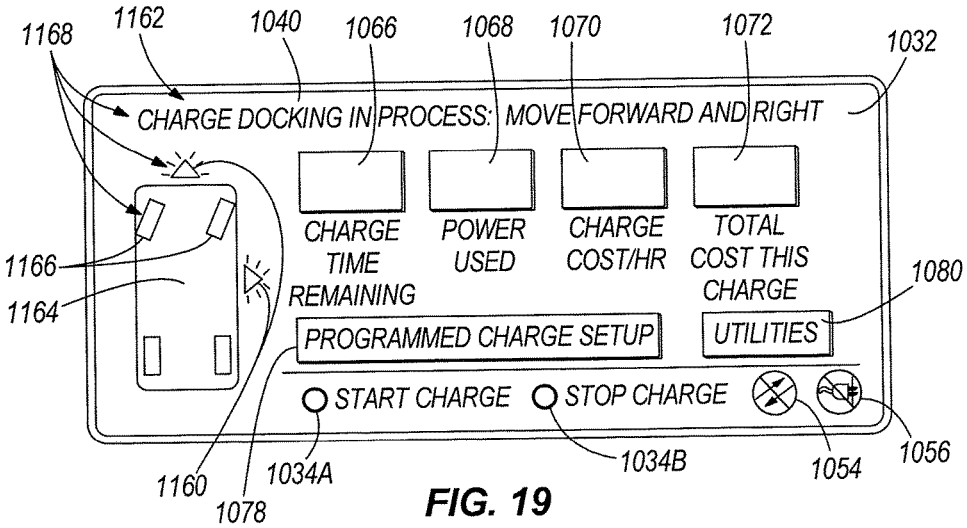
1168
1162
1040
1066
1068
1070
1072
1032
CHARGE DOCKING IN PROCESS: MOVE FORWARD AND RIGHT
CHARGE TIME REMAINING
POWER USED
CHARGE COST/HR
TOTAL COST THIS CHARGE
1166
1164
1080
PROGRAMMED CHARGE SETUP
UTILITIES
START CHARGE
STOP CHARGE
1160
1078
1034A
1034B
1054
1056

FIG. 19

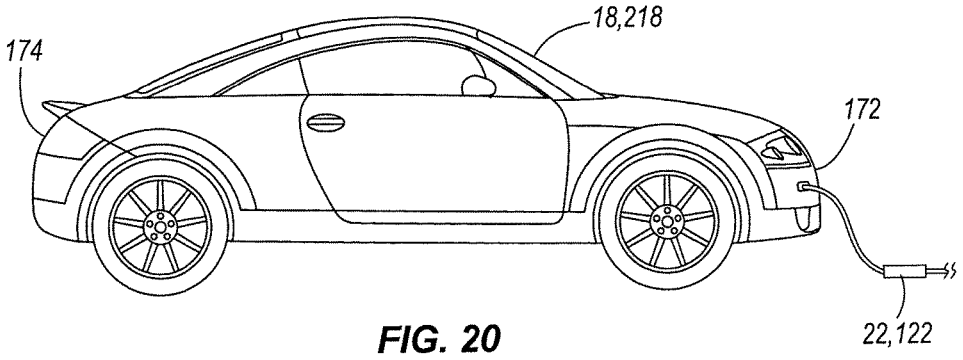


FIG. 20

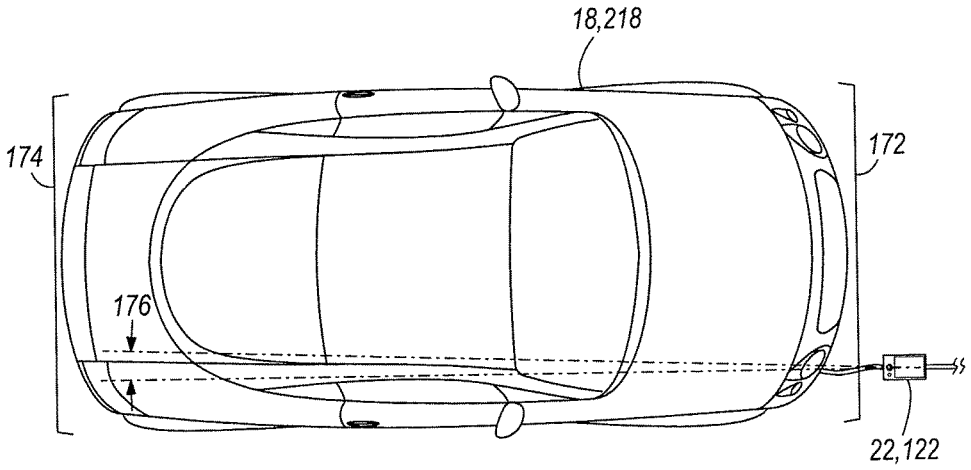


FIG. 21

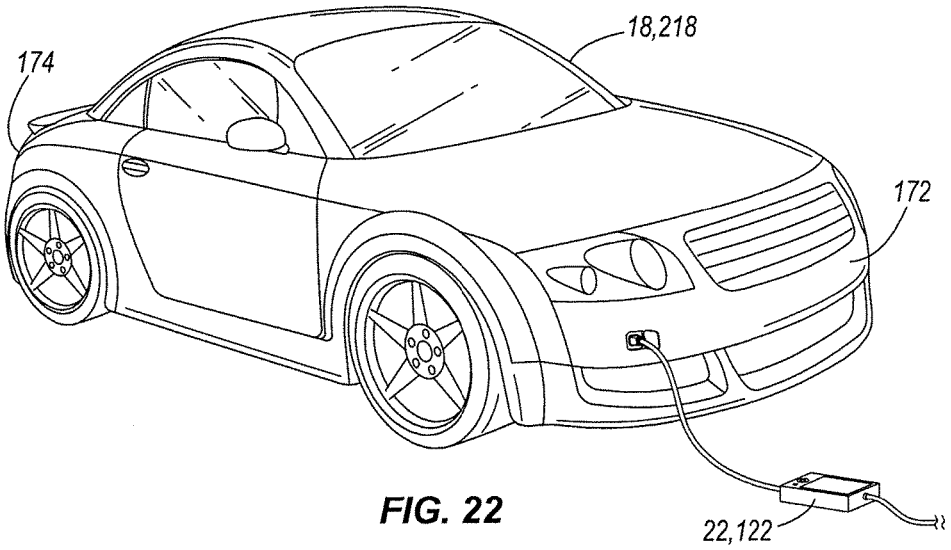


FIG. 22

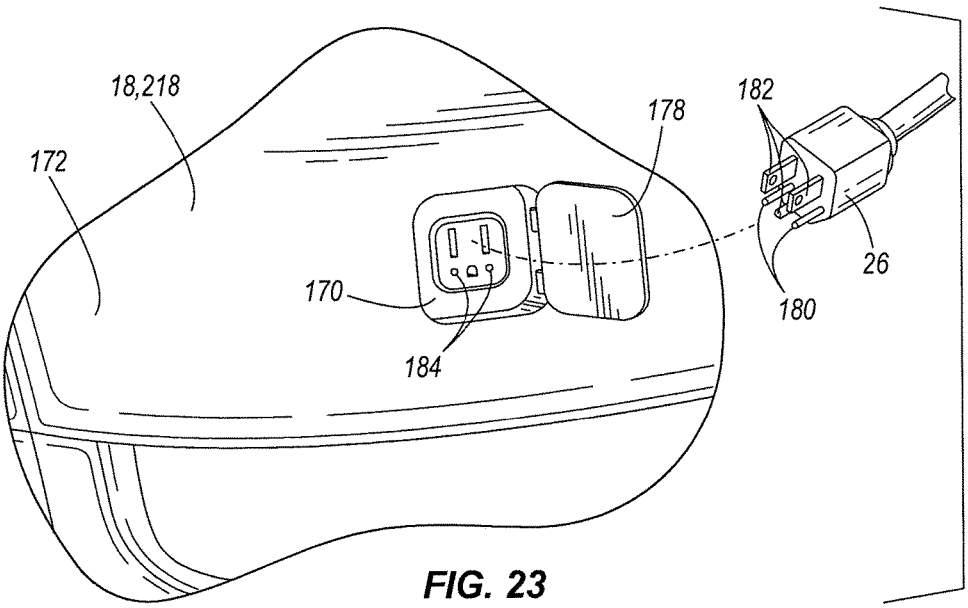


FIG. 23

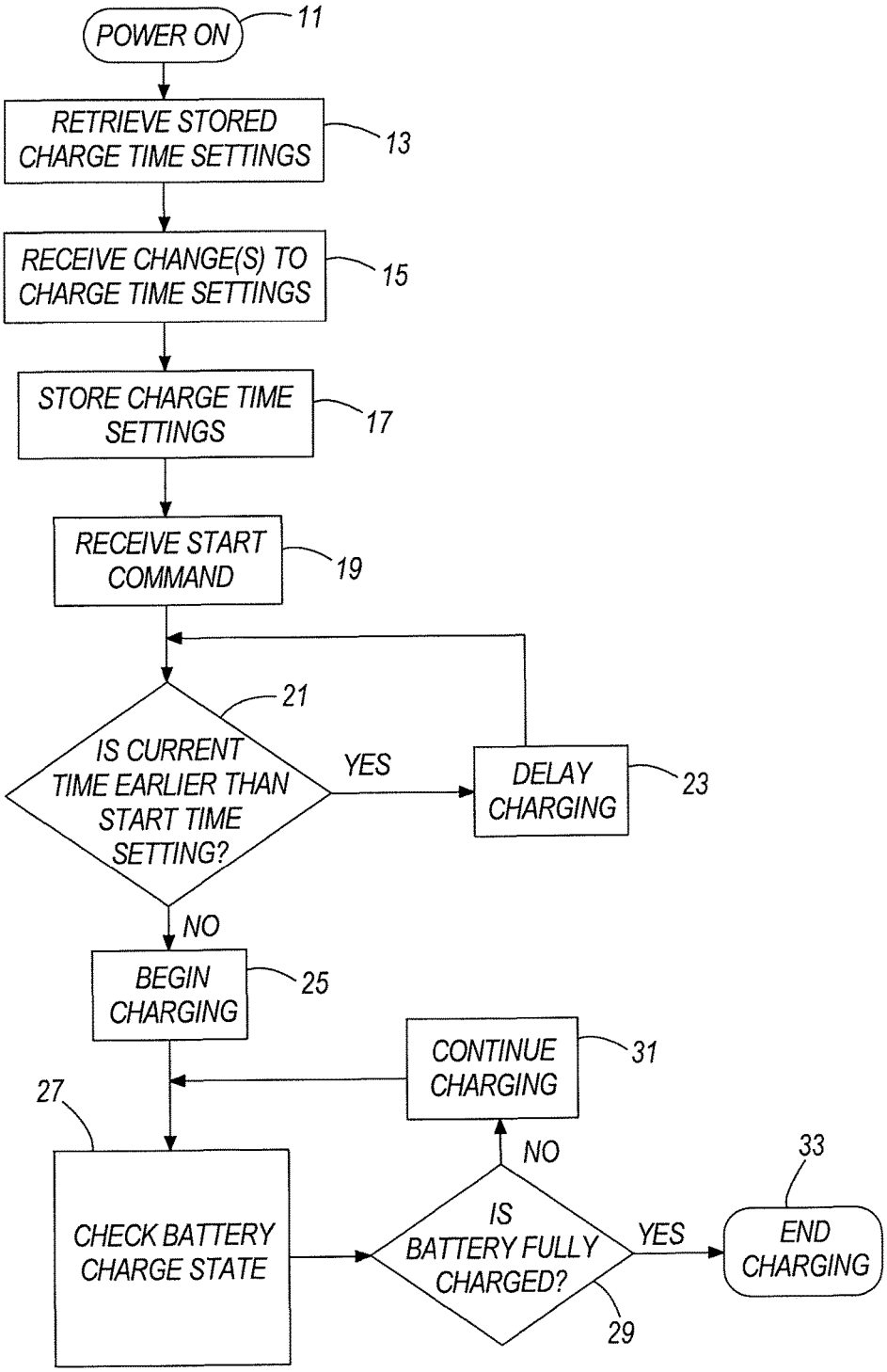
POWER ON
11
RETRIEVE STORED CHARGE TIME SETTINGS
13
RECEIVE CHANGE(S) TO CHARGE TIME SETTINGS
15
STORE CHARGE TIME SETTINGS
17
RECEIVE START COMMAND
19
IS CURRENT TIME EARLIER THAN START TIME SETTING?
21
YES
DELAY CHARGING
23
NO
BEGIN CHARGING
25
CONTINUE CHARGING
31
27
CHECK BATTERY CHARGE STATE
NO
IS BATTERY FULLY CHARGED?
29
YES
33
END CHARGING

FIG. 24

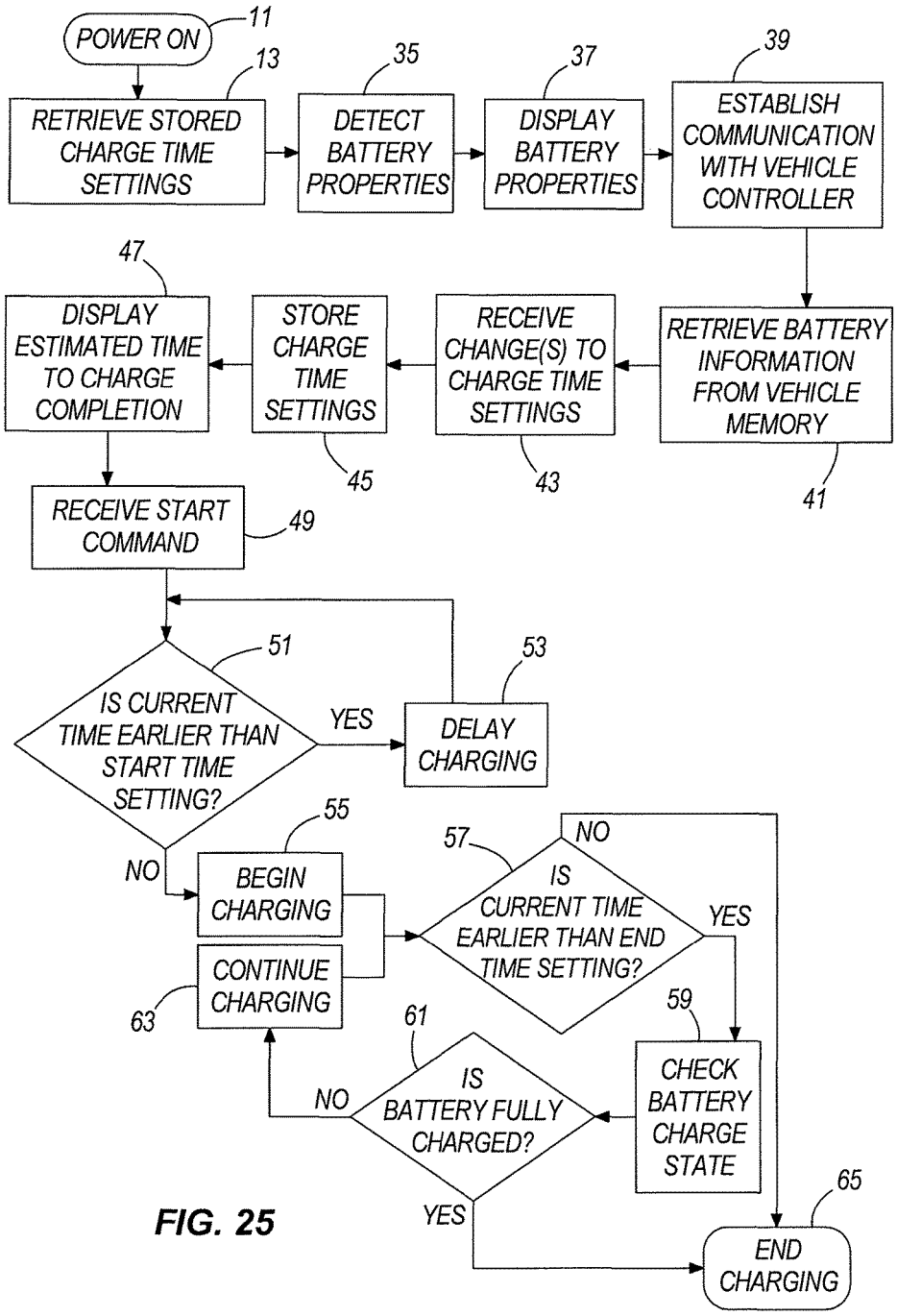
POWER ON
11
RETRIEVE STORED CHARGE TIME SETTINGS
13
DETECT BATTERY PROPERTIES
35
DISPLAY BATTERY PROPERTIES
37
ESTABLISH COMMUNICATION WITH VEHICLE CONTROLLER
39
RETRIEVE BATTERY INFORMATION FROM VEHICLE MEMORY
41
RECEIVE CHANGE(S) TO CHARGE TIME SETTINGS
43
STORE CHARGE TIME SETTINGS
45
DISPLAY ESTIMATED TIME TO CHARGE COMPLETION
47
RECEIVE START COMMAND
49
IS CURRENT TIME EARLIER THAN START TIME SETTING?
51
YES
DELAY CHARGING
53
NO
BEGIN CHARGING
55
CONTINUE CHARGING
63
IS CURRENT TIME EARLIER THAN END TIME SETTING?
57
NO
YES
CHECK BATTERY CHARGE STATE
59
IS BATTERY FULLY CHARGED?
61
NO
YES
END CHARGING
65

FIG. 25

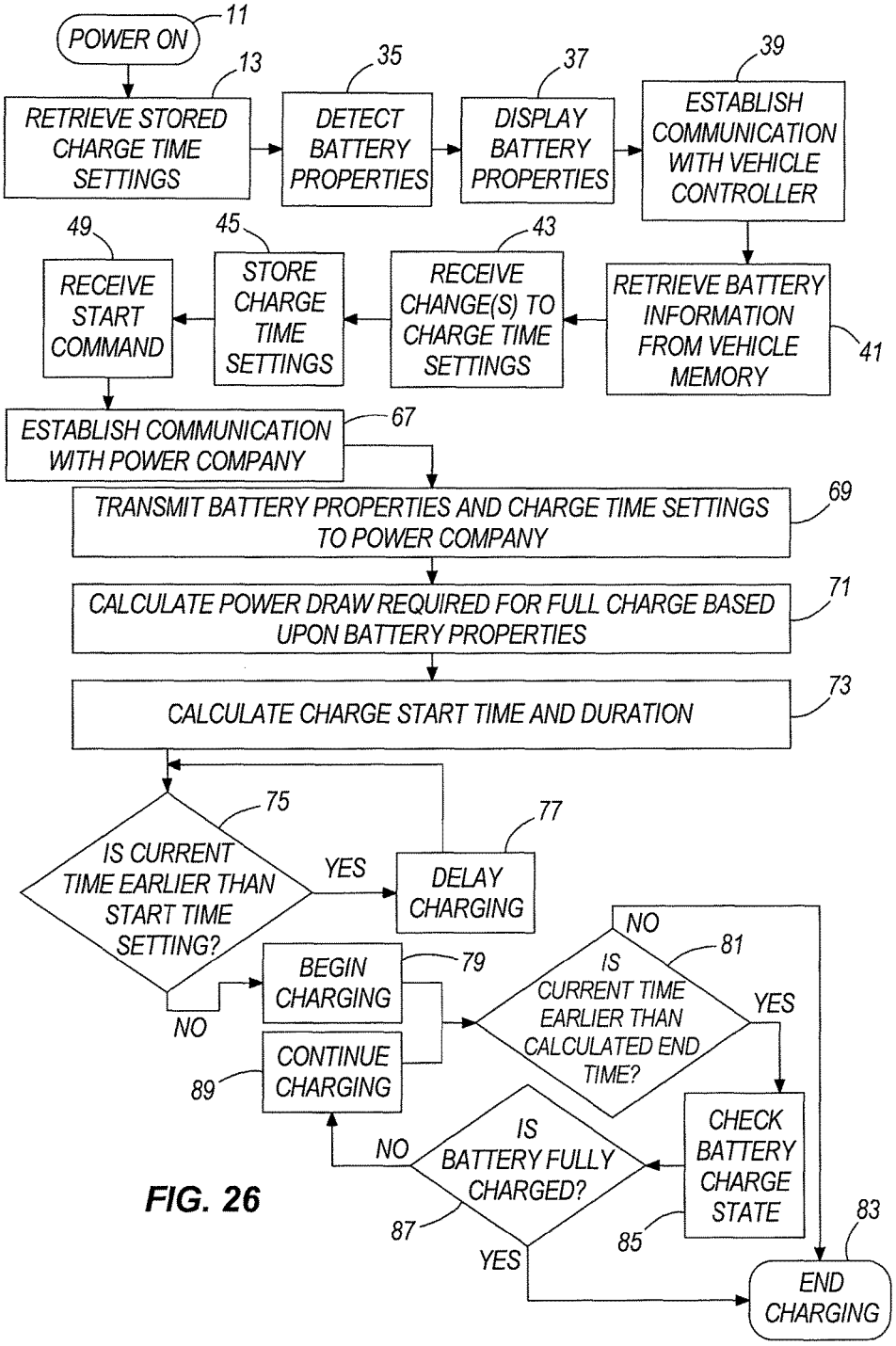
POWER ON
11
RETRIEVE STORED CHARGE TIME SETTINGS
13
DETECT BATTERY PROPERTIES
35
DISPLAY BATTERY PROPERTIES
37
ESTABLISH COMMUNICATION WITH VEHICLE CONTROLLER
39
RETRIEVE BATTERY INFORMATION FROM VEHICLE MEMORY
41
RECEIVE CHANGE(S) TO CHARGE TIME SETTINGS
43
STORE CHARGE TIME SETTINGS
45
RECEIVE START COMMAND
49
ESTABLISH COMMUNICATION WITH POWER COMPANY
67
TRANSMIT BATTERY PROPERTIES AND CHARGE TIME SETTINGS TO POWER COMPANY
69
CALCULATE POWER DRAW REQUIRED FOR FULL CHARGE BASED UPON BATTERY PROPERTIES
71
CALCULATE CHARGE START TIME AND DURATION
73
IS CURRENT TIME EARLIER THAN START TIME SETTING?
75
YES
DELAY CHARGING
77
NO
BEGIN CHARGING
79
CONTINUE CHARGING
89
IS CURRENT TIME EARLIER THAN CALCULATED END TIME?
81
NO
YES
CHECK BATTERY CHARGE STATE
85
IS BATTERY FULLY CHARGED?
87
NO
YES
END CHARGING
83

FIG. 26

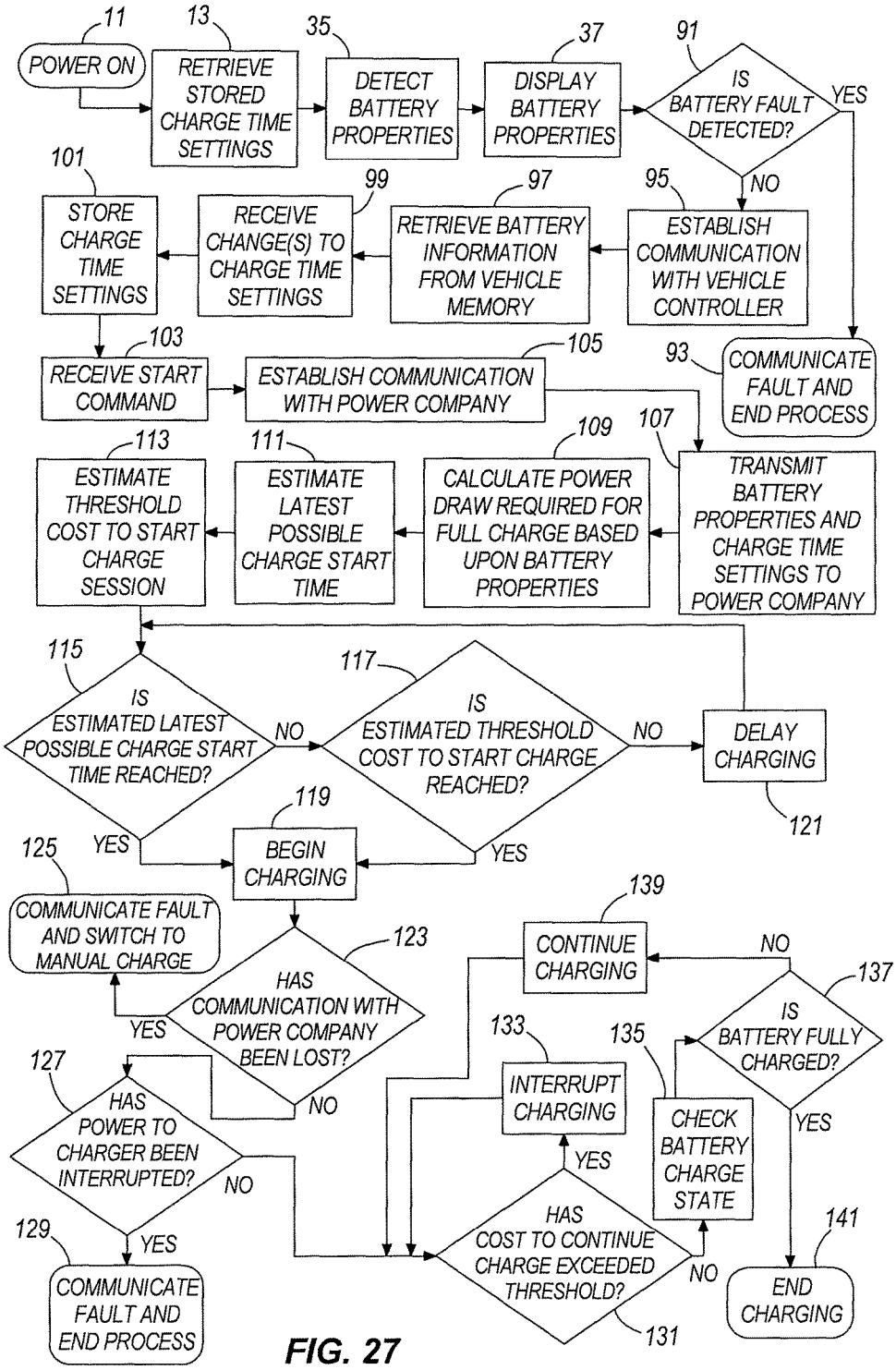
11
POWER ON
13
RETRIEVE STORED CHARGE TIME SETTINGS
35
DETECT BATTERY PROPERTIES
37
DISPLAY BATTERY PROPERTIES
91
IS BATTERY FAULT DETECTED?
YES
NO
95
ESTABLISH COMMUNICATION WITH VEHICLE CONTROLLER
97
RETRIEVE BATTERY INFORMATION FROM VEHICLE MEMORY
99
RECEIVE CHANGE(S) TO CHARGE TIME SETTINGS
101
STORE CHARGE TIME SETTINGS
103
RECEIVE START COMMAND
105
ESTABLISH COMMUNICATION WITH POWER COMPANY
93
COMMUNICATE FAULT AND END PROCESS
107
TRANSMIT BATTERY PROPERTIES AND CHARGE TIME SETTINGS TO POWER COMPANY
109
CALCULATE POWER DRAW REQUIRED FOR FULL CHARGE BASED UPON BATTERY PROPERTIES
111
ESTIMATE LATEST POSSIBLE CHARGE START TIME
113
ESTIMATE THRESHOLD COST TO START CHARGE SESSION
115
IS ESTIMATED LATEST POSSIBLE CHARGE START TIME REACHED?
NO
YES
117
IS ESTIMATED THRESHOLD COST TO START CHARGE REACHED?
NO
YES
DELAY CHARGING
121
119
BEGIN CHARGING
125
COMMUNICATE FAULT AND SWITCH TO MANUAL CHARGE
123
HAS COMMUNICATION WITH POWER COMPANY BEEN LOST?
YES
NO
127
HAS POWER TO CHARGER BEEN INTERRUPTED?
NO
YES
129
COMMUNICATE FAULT AND END PROCESS
139
CONTINUE CHARGING
NO
133
INTERRUPT CHARGING
135
CHECK BATTERY CHARGE STATE
137
IS BATTERY FULLY CHARGED?
YES
141
END CHARGING
YES
HAS COST TO CONTINUE CHARGE EXCEEDED THRESHOLD?
NO
131

FIG. 27

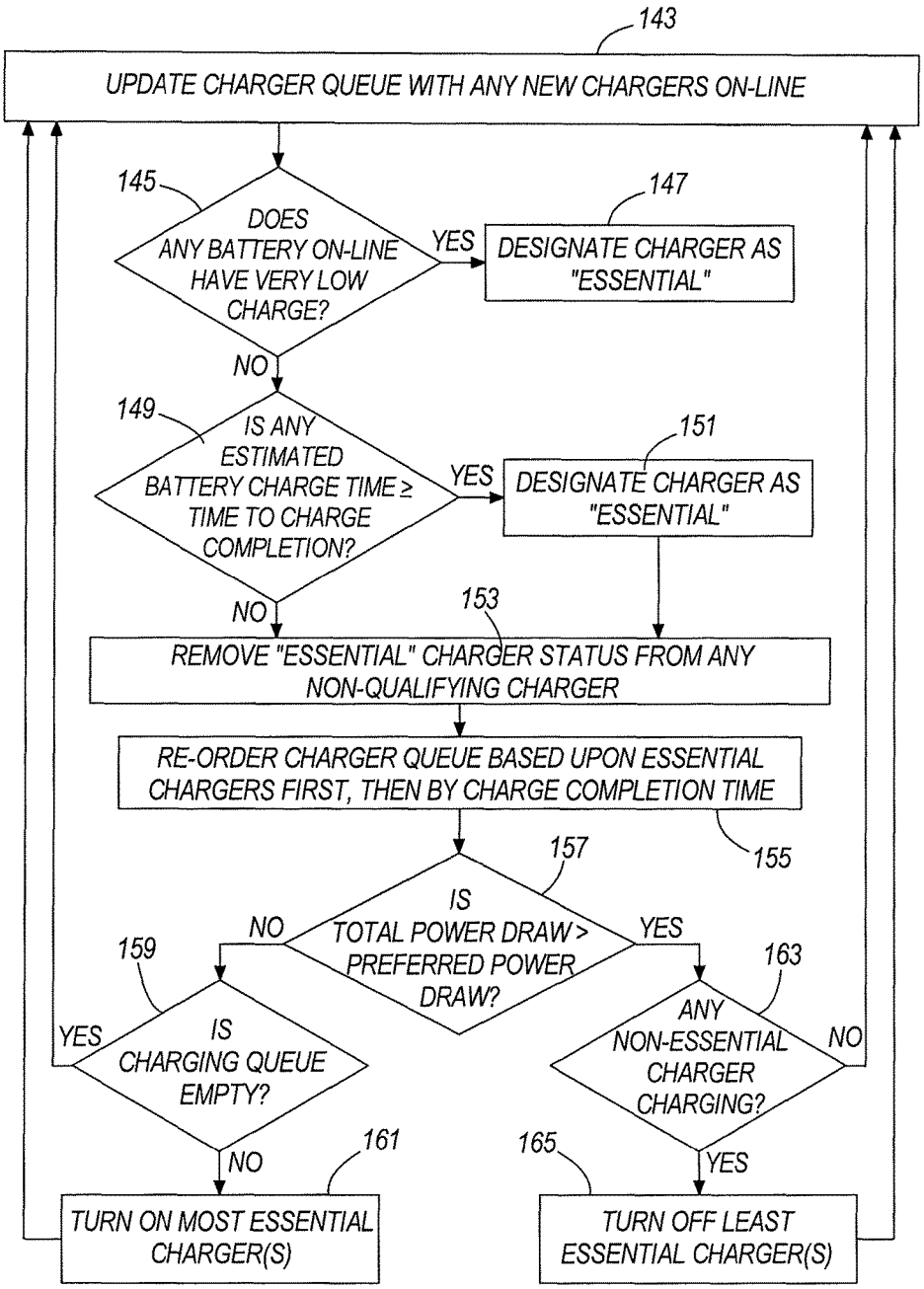
143
UPDATE CHARGER QUEUE WITH ANY NEW CHARGERS ON-LINE
145
DOES ANY BATTERY ON-LINE HAVE VERY LOW CHARGE?
YES
147
DESIGNATE CHARGER AS "ESSENTIAL"
NO
149
IS ANY ESTIMATED BATTERY CHARGE TIME ≥ TIME TO CHARGE COMPLETION?
YES
151
DESIGNATE CHARGER AS "ESSENTIAL"
NO
153
REMOVE "ESSENTIAL" CHARGER STATUS FROM ANY NON-QUALIFYING CHARGER
RE-ORDER CHARGER QUEUE BASED UPON ESSENTIAL CHARGERS FIRST, THEN BY CHARGE COMPLETION TIME
155
157
IS TOTAL POWER DRAW > PREFERRED POWER DRAW?
NO
YES
159
IS CHARGING QUEUE EMPTY?
YES
NO
161
TURN ON MOST ESSENTIAL CHARGER(S)
163
ANY NON-ESSENTIAL CHARGER CHARGING?
NO
YES
165
TURN OFF LEAST ESSENTIAL CHARGER(S)

*FIG. 28*

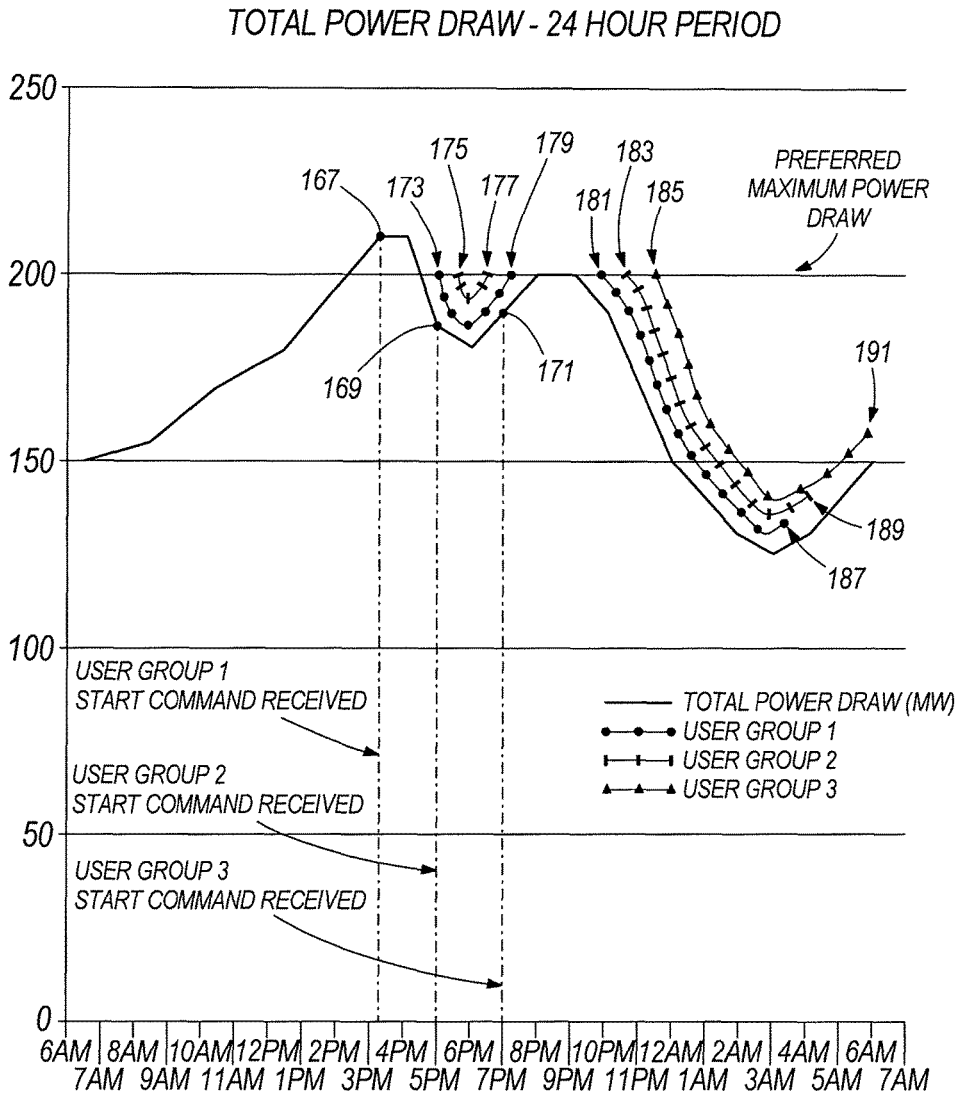
TOTAL POWER DRAW - 24 HOUR PERIOD
250
200
150
100
50
0
167
173
175
177
179
181
183
185
PREFERRED MAXIMUM POWER DRAW
169
171
191
189
187
USER GROUP 1 START COMMAND RECEIVED
USER GROUP 2 START COMMAND RECEIVED
USER GROUP 3 START COMMAND RECEIVED
TOTAL POWER DRAW (MW)
USER GROUP 1
USER GROUP 2
USER GROUP 3
6AM 7AM 8AM 9AM 10AM 11AM 12PM 1PM 2PM 3PM 4PM 5PM 6PM 7PM 8PM 9PM 10PM 11PM 12AM 1AM 2AM 3AM 4AM 5AM 6AM 7AM

FIG. 29

# VEHICULAR BATTERY CHARGER, CHARGING SYSTEM, AND METHOD

## CROSS-REFERENCE TO RELATED APPLICATIONS

This is a 371 national-stage application of PCT/US2009/054174 filed on Aug. 18, 2009, the entire contents of which are incorporated herein by reference. Priority is also hereby claimed to U.S. Provisional Patent Application No. 61/189,353 filed on Aug. 18, 2008, the entire contents of which are incorporated herein by reference.

## BACKGROUND

n light of the ever-rising costs of energy in the global market, energy consumers of all types seek to reduce the impact such costs to the greatest extent possible. One popular manner of doing so is the use of vehicles that do not rely solely (and in some cases, at all) upon petroleum products as a source of energy. Many such vehicles have been developed that rely exclusively or in large part on batteries that must be recharged from a source of electrical power external to the vehicle. Such vehicles are referred to hereinafter simply as "electric vehicles," it being understood that this term refers to any vehicle requiring an external supply of electrical power to charge the vehicle for normal use. By way of example and without limitation, the term "electric vehicle" therefore refers to vehicles whose primary source of power is electrical batteries, as well as vehicles that have other sources of power (e.g., biofuel, fuel cells, natural gas, compressed air, and the like) in addition to or in lieu of electrical batteries, but that are designed to be supplied with electrical power from an external source to improve efficient operation of the vehicle.

Unfortunately, significant limitations exist to the widespread utilization of electric vehicles. For example, most households have a small number of appliances, devices, and systems that require a significant draw of electrical power from a power supplier. The introduction of an electrical vehicle as another daily draw of electric power for a household would place unprecedented strain on community power systems, many of which are already incapable of meeting peak demands. This problem is exacerbated by the fact that in some cases, the daily draw of electric power to charge the battery of an electric vehicle may be the highest of a household.

Simply put, existing power infrastructure for most communities is incapable of meeting the demand that widespread use of rechargeable electric vehicles would place on the infrastructure. Until electrical power distribution infrastructure is updated to meet this demand (and even after such a time), improvements in energy distribution and utilization for charging electric vehicle batteries are welcome in the art.

## SUMMARY OF THE INVENTION

In some embodiments, a vehicle charger for charging a battery of a vehicle and adapted for communication with a first controller remote from the vehicle and vehicle charger, wherein the vehicle charger comprises an electrical power cord releasably attachable to at least one of the vehicle and a source of power; a second controller electrically coupled to the electrical power cord; and at least one of a transmitter and a receiver coupled to the second controller and adapted for communication with the first controller, the second



controller responsive to at least one signal from the first controller by changing a charging state of the vehicle charger.

Some embodiments of the present invention provide a vehicle charger for charging a battery of a vehicle in the course of a charging session, wherein the vehicle charger comprises a controller; a display coupled to the controller and adapted to display a time; and a user-manipulatable control coupled to the controller and operable by a user to enter a time of day at which the charging session will end, the controller changing the supply of electric power to the vehicle battery during the course of the charging session by at least one of increasing a rate of charge of the battery, decreasing the rate of charge of the battery, starting battery charging, or stopping battery charging based at least in part upon the time needed to charge the vehicle battery by the time of day entered by the user.

In some embodiments, a vehicle charger for charging a battery of a vehicle is provided, wherein the vehicle charger comprises a display mounted within the vehicle within reach of a user seated within the vehicle; a user-manipulatable control within reach of the user seated within the vehicle and by which a user can enter a time of day; a controller coupled to the display and to the battery, the controller changing a supply of electric power to charge the battery during the course of a charging session by at least one of increasing a rate of charge of the battery, decreasing the rate of charge of the battery, starting battery charging, or stopping battery charging based at least in part upon the time of day entered by the user.

Some embodiments of the present invention provide a vehicle charger for charging a battery of a vehicle, wherein the vehicle charger comprises: a controller; and a memory coupled to the controller and in which to save a time of day entered by a user; the controller changing a supply of electric power to charge the battery during the course of a charging session by at least one of increasing a rate of charge of the battery, decreasing the rate of charge of the battery, starting battery charging, or stopping battery charging based at least in part upon the time of day entered by the user; and wherein the controller supplies electric power to the battery if a level of battery charge is below a threshold level of battery charge independent of the time of day entered by the user, the controller supplying electric power to the battery until the threshold level of battery charge is reached.

In some embodiments, a vehicle charger for charging a battery of a vehicle is provided, wherein the vehicle charger comprises a controller; a display coupled to the controller; and a memory accessible by the controller and in which to save a time of day; the controller changing a supply of electric power to charge the battery during the course of a charging session by at least one of increasing a rate of charge of the battery, decreasing the rate of charge of the battery, starting battery charging, or stopping battery charging based at least in part upon the time of day; the controller operable to display at least two different screens upon the display, at least one of the screens displaying information regarding a charging session, and at least one of the screens displaying settings at least partially defining the manner of operation of the vehicle charger.

Some embodiments of the present invention provide a vehicle charger for charging a battery of a vehicle and adapted for communication with a first controller remote from the vehicle and vehicle charger, wherein the vehicle charger comprises a display; a second controller coupled to the display and operable to change a supply of electric power to charge the battery during the course of a charging session

by at least one of increasing a rate of charge of the battery, decreasing the rate of charge of the battery, starting battery charging, or stopping battery charging based at least in part upon a time of day; and at least one of a transmitter and a receiver coupled to the second controller and adapted for communication with the first controller, wherein the second controller displays an indicator indicating a status of communication between the first and second controllers.

In some embodiments, a vehicle charger for charging a battery of a vehicle is provided, and comprises a controller; and a display coupled to the controller; the controller changing a supply of electric power to charge the battery during the course of a charging session by at least one of increasing a rate of charge of the battery, decreasing the rate of charge of the battery, starting battery charging, or stopping battery charging based at least in part upon a time of day; the controller operable to display on the display an amount of time remaining to complete charging of the battery.

Some embodiments of the present invention provide a vehicle charger for charging a battery of a vehicle, wherein the vehicle charger comprises a controller; and a display coupled to the controller; the controller changing a supply of electric power to charge the battery during the course of a charging session by at least one of increasing a rate of charge of the battery, decreasing the rate of charge of the battery, starting battery charging, or stopping battery charging based at least in part upon a time of day; the controller operable to display on the display an amount of power consumed by the battery during the charging session.

In some embodiments, a vehicle charger for charging a battery of a vehicle is provided, and comprises a controller; and a display coupled to the controller; the controller changing a supply of electric power to charge the battery during the course of a charging session by at least one of increasing a rate of charge of the battery, decreasing the rate of charge of the battery, starting battery charging, or stopping battery charging based at least in part upon a time of day; the controller operable to display on the display a cost of power supplied to the vehicle charger.

Some embodiments of the present invention provide a vehicle charger for charging a battery of a vehicle in the course of a charging session, wherein the vehicle charger comprises an electrical power cord releasably attachable to at least one of the vehicle and a source of power; a controller; a housing attached to the electrical cord; a display on the housing, coupled to the controller, and adapted to display a time; and a user-manipulatable control coupled to the controller and operable by a user to enter a time of day; the controller changing the supply of electric power to the vehicle battery during the course of the charging session by at least one of increasing a rate of charge of the battery, decreasing the rate of charge of the battery, starting battery charging, or stopping battery charging based at least in part upon the time of day entered by the user.

In some embodiments, a vehicle charger for charging a battery of a vehicle and adapted for communication with a first controller remote from the vehicle and vehicle charger is provided, and comprises a display; a user-manipulatable control; a second controller coupled to the display and operable to change a supply of electric power to charge the battery during the course of a charging session by at least one of increasing a rate of charge of the battery, decreasing the rate of charge of the battery, starting battery charging, or stopping battery charging; and at least one of a transmitter and a receiver coupled to the second controller and adapted for communication with the first controller, the second controller responsive to at least one signal from the first controller by changing a charging state of the vehicle charger based at least in part upon the time of day entered by the user.

Some embodiments of the present invention provide a vehicle charger for charging a battery of a vehicle, wherein the vehicle charger comprises a controller operable to change a supply of electric power to charge the battery during the course of a charging session by at least one of increasing a rate of charge of the battery, decreasing the rate of charge of the battery, starting battery charging, or stopping battery charging based at least in part upon a time of day, wherein the controller transmits a signal responsive to detection of an interruption of power supply to the vehicle charger.

In some embodiments, a vehicle charger for charging a battery of a vehicle is provided, and comprises a controller; a vehicle charger battery coupled to the controller; and an electrical power cord releasably attachable to at least one of the vehicle and the vehicle charger battery to supply power from the vehicle charger battery to the battery of the vehicle, wherein the controller is operable to change a supply of electric power to the vehicle charger battery during the course of a charging session by at least one of increasing a rate of charge of the vehicle charger battery, decreasing the rate of charge of the vehicle charger battery, starting charging of the vehicle charger battery, or stopping charging of the vehicle charger battery based at least in part upon a time of day.

Some embodiments of the present invention provide a vehicle charger for charging a battery of a vehicle, wherein the vehicle charger comprises a first core on the vehicle; a second core in a location stationary with respect to the first core, the second core providing an inductive charge to the first core in at least one position of the first core with respect to the second core; at least one sensor positioned to detect the position of the first core with respect to the second core; a display mounted within the vehicle within view of a user seated within the vehicle; and a controller coupled to the display and responsive to signals from the sensor to display at least one indicator on the display indicating a direction in which the vehicle must move for an improved positional relationship between the first and second cores.

In some embodiments, a vehicle charger for charging a battery of a vehicle is provided, and comprises a controller; a first electrical connector coupled to the battery and the controller and located on one side of the vehicle; and a second electrical connector coupled to the battery and the controller and located on a different side of the vehicle, the first and second electrical connectors both shaped and dimensioned for releasable connection to an electrical power cord supplying power to the vehicle from an external power source.

Some embodiments of the present invention provide a method of controlling charging of batteries of multiple vehicles each electrically connected to a power generation and distribution system, wherein the method comprises establishing communication with a controller associated with a battery charger of each vehicle; obtaining from each battery charger a time of day by which battery charging for the vehicle associated with the battery charger must be completed; and changing power supply to at least some of the battery chargers based at least in part upon the time of day received from the battery chargers.

## BRIEF DESCRIPTION OF THE DRAWINGS

FIG. **1** is a schematic diagram of a power generation and distribution system for a community.

FIG. **2** illustrates a vehicular charging system according to an embodiment of the present invention.

FIG. **3** illustrates a vehicular charging system according to another embodiment of the present invention.

FIG. **4** illustrates a vehicular charging system according to another embodiment of the present invention.

FIG. **5** is a perspective view of a vehicle charger according to an embodiment of the present invention.

FIG. **6** is a perspective view of a portion of the vehicular charger illustrated in FIG. **5**, shown in a first state.

FIG. **7** is a perspective view of the vehicular charger illustrated in FIGS. **5** and **6**, showing the vehicular charger in a second state.

FIG. **8** is a perspective view of the vehicular charger illustrated in FIGS. **5-7**, showing the vehicular charger in a third state.

FIG. **9** is a perspective view of the vehicular charger illustrated in FIGS. **5-8**, showing the vehicular charger in a fourth state.

FIG. **10** is a perspective view of the vehicular charger illustrated in FIGS. **5-9**, showing the vehicular charger in a fifth state.

FIG. **11** is a perspective view of the vehicular charger illustrated in FIGS. **5-10**, showing the vehicular charger in a sixth state.

FIG. **12** is a perspective view of a portion of a vehicular charger according to another embodiment of the present invention.

FIG. **13** illustrates a vehicle display according to an embodiment of the present invention.

FIG. **14** illustrates another vehicle display according to an embodiment of the present invention.

FIG. **15** is a schematic electrical diagram of a vehicular charging system according to an embodiment of the present invention.

FIG. **16** is a schematic electrical diagram of a vehicular charging system according to another embodiment of the present invention.

FIG. **17** is a schematic electrical diagram of a vehicular charging system according to another embodiment of the present invention.

FIG. **18** a schematic diagram of a portion of a inductive vehicular charging system according to an embodiment of the present invention.

FIG. **19** illustrates a vehicular display for the inductive vehicular charging system illustrated in FIG. **18**.

FIG. **20** is a side view of a vehicle and vehicular charger according to an embodiment of the present invention.

FIG. **21** is a top view of the vehicle and vehicular charger shown in FIG. **19**.

FIG. **22** is a perspective view of the vehicle and vehicular charger shown in FIGS. **19** and **20**.

FIG. **23** is a perspective detail view of the vehicle and vehicular charger shown in FIGS. **19-21**.

FIG. **24** is a flowchart illustrating a method of operation of a vehicular charger according to an embodiment of the present invention.

FIG. **25** is a flowchart illustrating a method of operation of a vehicular charger according to another embodiment of the present invention.

FIG. **26** is a flowchart illustrating a method of operation of a vehicular charger according to another embodiment of the present invention.

FIG. **27** is a flowchart illustrating a method of operation of a vehicular charger according to another embodiment of the present invention.

FIG. **28** is a flowchart illustrating a method of operation of a vehicular charging system according to an embodiment of the present invention.

FIG. **29** illustrates power draw from a power grid over a period of time, as controlled in part by a vehicular power charging system according to an embodiment of the present invention.

## DETAILED DESCRIPTION

Before any embodiments of the present invention are explained in detail, it is to be understood that the present invention is not limited in its application to the details of construction and the arrangement of components set forth in the following description or illustrated in the accompanying drawings. The invention is capable of other embodiments and of being practiced or of being carried out in various ways. Also, it is to be understood that the phraseology and terminology used herein is for the purpose of description, and should not be regarded as limiting. The use of "including," "comprising," or "having" and variations thereof herein is meant to encompass the items listed thereafter and equivalents thereof as well as additional items. Unless specified or limited otherwise, the terms "mounted," "connected," "supported," and "coupled" and variations thereof are used broadly and encompass both direct and indirect mountings, connections, supports, and couplings. Further, "connected" and "coupled" are not restricted to physical or mechanical connections or couplings.

A power generation and distribution system in which vehicle chargers and vehicle charging systems according to the present invention can be used is illustrated schematically in FIG. **1**, and is indicated generally at **10**. The system **10** includes one or more sources of power **12** that supply a community, such as one or more power plants generating electric power from natural gas, coal, water flow, nuclear power, geo-thermal power, wind, solar power, other power sources, and any combination thereof. Any number of sources of power **12** can supply the electricity needs of the community, and can be located within the community and/or located distant from the community. For example, electric power can be generated in one or more power plants located in or nearby the community, whereas additional electric power can be supplied from other more distant power plants as needed in times of peak demand.

Electric power is distributed from the sources of power **12** in any conventional manner, such as by a number of power lines **14** running from the sources of power **12** to various locations in the community. Electric power can be further distributed within the community by additional power lines **14** and power distribution infrastructure. Such power lines and power distribution infrastructure (in their various forms) are known to those skilled in the art, and are not therefore described further herein.

Electric power is transmitted over the power lines **14** to a number of different locations **16** in the community, each of which draws and uses the electrical power for various purposes. One or more electric vehicles **18**, **618**, **1018** are at some of these locations, and draw an amount of electric power for purposes of charging one or more batteries **20**, **620**, **1020** (see FIGS. **2-4**) of each electric vehicle **18**, **618**, **1018**. Each electric vehicle **18**, **618**, **1018** in the community is releasably connected to the vehicular charging system **10**. In the illustrated embodiment of FIGS. **2** and **3**, each electric vehicle **18**, **618** is releasably electrically and mechanically connected by a respective cord **22**, **744** as will be described in greater detail below. In other embodiments (e.g., FIG. **4**),

one or more of the electric vehicles **1018** are releasably electrically connected to the vehicular charging system **10**, but are not mechanically connected thereto. In such cases, the electric vehicles **1018** can be electrically connected by use of induction charging as described in greater detail below.

A vehicle charging cord **22** according to an embodiment of the present invention is illustrated in FIG. **5**, and is shown in use in FIG. **2**. The illustrated vehicle charging cord **22** has a first end **24** adapted to releasably connect to an electrical outlet (not shown) of a business, residence, or other building or facility, and a second end **26** adapted to releasably connect to the electric vehicle **18**. In this regard, the first end **24** can have, for example, a standard U.S. two-prong or three-prong male electrical connector (i.e., grounded or ungrounded) intended for connection to a 120V AC supply of electric current, a U.S. Type B electrical connector intended for connection to a 220V AC supply of electric current, any electrical connector suitable for a 240V AC supply of electrical current, a Japanese Type B electrical connector meeting JA1-15 electrical standards, a British Type G electrical connector meeting British BS1363 electrical standards, a European Type F electrical connector meeting CENELEC electrical standards, a French Type E electrical connector meeting French electrical standards, a Chinese Type I electrical connector meeting Chinese electrical standards, or a Type D or M electrical connector meeting Indian electrical standards. Any other releasable electrical connector suitable for connection to an electrical outlet of a building or facility, or for connection to a power cord, power device, or other power interface with the electrical system of the building or facility can be used as desired. In this regard, although the first end **24** of the vehicle charging cord **22** shown in FIG. **5** has a U.S. Type B plug, it will be appreciated that the first end **24** can have any number and arrangement of blades, pins, and apertures for releasable mating engagement with an electrical connector of a power cord, power device, or other power interface as just described.

The second end **26** of the vehicle charging cord **22** can have any suitable plug for releasable connection with a mating electrical connector of the vehicle. In this regard, the second end **26** of the vehicle charging cord **22** can have any number of blades and/or pins for mating with associated apertures of the mating electrical connector of the vehicle, and can also or instead have any number of apertures for mating with associated blades and/or pins of the mating electrical connector of the vehicle. The second end **26** can be connected directly to an electrical connector of a vehicle, or to a power cord, power device, or other power interface with the electrical power system of a vehicle.

The vehicle charging cord **22** can be any gauge suitable for carrying electric current to charge the vehicle **18** and for also meeting country and local electrical codes. Also, the vehicle charging cord **22** illustrated in FIG. **5** is insulated with flexible plastic or other suitable material.

The vehicle charging cord **22** illustrated in FIGS. **2** and **5** also has a housing **28** intermediate the ends **24**, **26** of the cord **22**. In other embodiments, the housing **28** can be located at or define an end of the cord **22**, in which case the housing **28** can carry any of the electrical connectors described above with regard to ends **24**, **26** of the vehicle charging cord **22**.

The illustrated housing **28** has a substantially parallelepiped shape. Depending at least in part upon the shape and size of the electronics within the housing (described below) for performing any desired electrical transformer function, and the shape and size of the electrical elements used for the control features described below, the housing **28** can be larger or smaller than that shown in FIG. **5**, and can have any other shape desired, (e.g., a cube shape, a spherical, elliptical, or other rotund shape, an irregular shape, and the like).

With reference now to FIGS. **5-11**, and also with reference to FIG. **15** (which illustrates a vehicular charging system utilizing the vehicular charger of FIGS. **2**, **5-11**, a number of user-manipulatable controls **30** and a display **32** are provided on the housing **28**. The illustrated housing **28** also contains electrical components for transforming power supplied thereto (indicated generally at **136**), and control circuitry for performing the vehicle battery charging management functions described in greater detail below. The display **32** shown in FIGS. **5-11** and **15** is an LCD display **32**, although any other type of display can be used as desired. The user-manipulatable controls **30** include a power button **34**, a number of navigation buttons **36**, and a select button **38** (see FIGS. **6-11**). The power button **34** can be pressed by a user to turn the vehicle charging cord **22** on and off, thereby enabling and disabling the vehicle charging cord **22** to charge one or more batteries **20** of a vehicle **18** connected thereto. The navigation buttons **36** can be pressed by a user to navigate through one or more screens upon the display **32** (described in greater detail below), whereas the select button **38** can be pressed by a user to select one or more options on the screen(s).

In the illustrated embodiment, four navigation buttons **36** (up, down, left, and right) are positioned around the select button **38**, all of which are adjacent the power button **34**. However, in other embodiments, the navigation buttons **36**, select button **38**, and power button **34** can be in any other arrangement on the housing **28**. Also, it will be appreciated that the user-manipulatable controls **30** can be buttons as shown in FIGS. **5-11**, but can instead or also be any other type of user-manipulatable control. For example, any of the user-manipulatable controls **30** can be dome or tact switch, heat-sensitive, or other types of buttons, can be knobs or dials, and the like. Also, fewer or more user-manipulatable controls **30** can be used in other embodiments, such as for vehicle charging cords **22** not having a power button **34** (i.e., automatically powered upon connection to a power source), vehicle charging cords **22** having more or fewer navigation buttons (depending in some embodiments upon the arrangement of options on screens **32** shown on the display **32**), and the like.

Although a display **32** in conjunction with a number of button-type user-manipulatable controls **34**, **36**, **40** is employed in the embodiment of FIGS. **2**, **5-11** and **15**, in other embodiments, the display **32** and any number of the button-type user-manipulatable controls **34**, **36**, **40** can be replaced by a touch screen (not shown). The touch screen can enable a user to display options, navigate between two or more screens, and select options by inputting commands directly into the display **32**, and in some embodiments can simplify control of the vehicle charging cord **22**.

With reference now to FIG. **15**, in some embodiments, the vehicle charging cord **22** has a controller **44** located within the housing **28** and at least partially controlling operations of the vehicle charging cord **22**. The controller **44** in the illustrated embodiment of FIGS. **2**, **5-11** and **15** is a programmable processor of any suitable type, but in some embodiments can take other forms such as non-programmable processor, a system of discrete logic elements, and any combination thereof. The illustrated vehicle charging cord **22** also has a transceiver **46** coupled to the controller **44**, enabling the controller **44** to communicate with another

controller. The other controller can be one or more processors of a personal computer, phone, PDA, or other processor-based device associated with a user of the vehicle charging cord **22**, one or more processors of a server or other computer associated with a power utility providing power to the vehicle charging cord **22**, and the like). In the illustrated embodiment of FIGS. **2**, **5-11** and **15**, the other controller is a remote computer of a power utility **48**, and is indicated at **50**. The controller **50** of the power utility **48** is coupled to a power utility transceiver **52** to enable the power utility **48** to communicate with the controller **44** of the vehicle charging cord **22**.

The transceiver **46** of the vehicle charging cord **22** and the transceiver **52** for the computer of the power utility **48** can each take any suitable form. However, it will be appreciated that the transceiver **52** for the computer of the power utility **48** can be selected to enable the computer of the power utility **48** to communicate with multiple vehicle charging cord controllers **44** of the same or different users. Also, the transceiver **46** of the vehicle charging cord **22** and/or the transceiver **52** for the computer of the power utility **48** can be replaced by a separate transmitter and a separate receiver enabling two-way communication between the controller **50** of the power utility **48** and the controller **44** of the vehicle charging cord **22**. Such communication can be via the power lines **14** (see FIG. **1**) between the computer of the power utility **48** and the locations **16** at which the vehicle charging cord **22** is used. In this regard, reference herein and in the appended claims to a "receiver" and a "transmitter" is intended to encompass transceivers as well as separate receivers and transceivers.

Any power line communication (PLC) system or combination of PLC systems adapted for carrying data over power lines **14** can be used for communication between the controllers **44**, **50** described above, such as distribution line carrier (DLC) PLC systems, broadband over lines carrier (BLC) systems, low-speed narrow-band communication systems (proposed and used in Demand Side Management systems), and the like. Communication between the controller **50** of the power utility **48** and the controller **44** of the vehicle charging cord **22** can be through any number of substations between the power utility **48** and the location **16** at which the vehicle charging cord **22** is used. Also, depending at least in part upon the PLC system(s) used, such communication can be through any number of repeaters as is well known to those skilled in the art of PLC systems.

The controller **50** of the power utility **48** (with which the controller **44** of the vehicle charging cord **22** communicates) can be located anywhere between the location **16** of the user and the sources of power **12**. For example, the controller **50** of the power utility **48** can be located at a facility where power is generated, at an office of the power utility **48**, at any of a number of substations between the source of power **12** and the location **16** of the user, and the like.

By connecting the first end **24** of the vehicle charging cord **22** to an electrical outlet of a building or facility (or to a power cord, power device, or other power interface with the electrical system of the building or facility), communication can be established over the vehicle charging cord **22**, the electrical system of the home, building, or other facility (e.g., through wiring and one or more circuit breakers thereof), and low and high-voltage power lines to the power utility **48** and the controller **50** of the power utility **48** described above. In some embodiments, this communication can be established automatically upon plugging in the first end **24** of the vehicle charging cord **22**, whereas in other embodiments, this communication is established when the vehicle charging cord **22** is turned on or when a user enters an appropriate command to establish this communication (described in greater detail below), or in any other suitable manner. Communication between processors established automatically upon their connection are well known to those skilled in the art, and are not therefore described further herein.

As discussed above, communication between the controller **44** of the vehicle charging cord **22** and the controller **50** of the power utility **48** can be over power lines, wiring, or other conductors. However, it will be appreciated that communication along any portion or all of the distance between the controller **50** of the power utility **48** and the vehicle charging cord **22** can include wireless communication. In such cases, any number of wireless transmitters and receivers (and associated antennae) can be used to send and receive communications between the controller **50** of the power utility **48** and the vehicle charging cord **22**. By way of example only, the vehicle charging cord **22** can have a wireless processor and associated antenna, receiver, and transmitter enabling wireless communication with a wireless service provider, and ultimately to the controller **50** of the power utility **48**. Like the PLC communication described above, wireless communication between the controller **50** of the power utility **48** and the vehicle charging cord **22** can be established automatically upon plugging in the first end **24** of the vehicle charging cord **22**, when the vehicle charging cord **22** is turned on, or when a user enters an appropriate command to establish this communication (described in greater detail below).

In some embodiments, the controller **44** of the vehicle charging cord **22** communicates with a user's computer rather than, or in addition to, communicating with the controller **50** of the power utility **48**. This communication can be any combination of wired or wireless communication. For example, a residence-based, office-based, or other facility-based PLC system can be used to communicate between the controller **44** of the charging cord **22** and a user's computer (via the electrical system of the residence, office, or other facility). In other embodiments, the vehicle charging cord **22** can have a wireless processor adapted for communication with a user's computer. Such communication can be through any suitable wireless personal area network (WPAN) (using, for example, ZigBee®, Bluetooth®, or any other WPAN wireless technology), wireless local area network (WLAN), and the like. Like the PLC communication described above, communication between the controller **50** of the power utility **48** and the user's computer can be established automatically upon plugging in the first end **24** of the vehicle charging cord **22**, when the vehicle charging cord **22** is turned on, or when a user enters an appropriate command to establish this communication (described in greater detail below).

Upon connection with a user's computer (wireless or otherwise), a user can control the vehicle charging cord **22** in any of the same manners as a power utility **48** described in greater detail below. Alternatively or in addition, communication between the controller **44** of the vehicle charging cord **22** and the controller of **50** of the power utility **48** can be established through the user's computer. Specifically, wired or wireless communication between the controller **44** of the vehicle charging cord **22** and the user's computer can be used in conjunction with a connection between the user's computer and the controller **50** of the power utility **48** to enable communication between the controller **44** of the vehicle charging cord **22** and the controller **50** of the power utility **48**. Such communication can thereby enable the

power utility **48** to control the vehicle charging cord **22** (in any of the manners described below) via the user's computer.

With reference now to FIGS. **6-11**, the illustrated vehicle charging cord **22** has a first screen **40** providing information regarding the vehicle charging cord **22**, a battery connected thereto, and the status of charging operations of the vehicle charging cord **22**. In the illustrated embodiment of FIGS. **2**, **5-11** and **15**, the screen **40** has a vehicle charging cord status indicator **42**, which displays the status of charging operations. The status indicator **42** can indicate whether the vehicle charging cord **22** is charging a battery, the type of charging operations being performed by the vehicle charging cord **22**, and/or whether an error in charging the battery has been detected.

In the state of the vehicle charging cord **22** shown in FIGS. **6**, **10**, and **11**, the vehicle charging cord **22** is not charging a battery connected thereto, nor is the vehicle charging cord **22** programmed or otherwise controlled to charge a battery (described in greater detail below). Accordingly, the status indicator **42** displays "OFF". In the state of the vehicle charging cord **22** shown in FIG. **7**, the vehicle charging cord **22** is in the process of charging a vehicle battery in "manual" mode (i.e., not based upon a time of day). Therefore, the status indicator **42** displays "MANUAL CHARGE IN PROCESS" in FIG. **7**. In the state of the vehicle charging cord **22** shown in FIG. **8**, the vehicle charging cord **22** is in the process of charging a battery based upon one or more instructions that can include a time of day to begin charging the battery and/or a time of day to stop battery charging (discussed in greater detail below). Accordingly, the status indicator **42** displays "PROGRAMMED CHARGE IN PROCESS" in FIG. **8**. Finally, in the state of the vehicle charging cord **22** shown in FIG. **9**, an error has been detected by the vehicle charging cord **22** in the process of attempting to charge the battery. Therefore, the status indicator **42** display "ERROR—BATTERY FAULT" in FIG. **9**. In some embodiments, the vehicle charging cord **22** can have appropriate circuitry to detect a variety of charging problems, including without limitation a damaged battery, a damaged vehicle charging cord **22**, a disconnection between the vehicle charging cord **22** and a source of power used to charge the vehicle battery, and/or a disconnection between the vehicle charging cord **22** and the battery to be charged. A large number of conventional circuits capable of detecting such problems exist, and are not therefore described further herein. Such circuits fall within the spirit and scope of the present invention.

The first screen **40** of the vehicle charging cord **22** illustrated in FIGS. **2**, **5-11** and **15** also has a communication status indicator **54**. The communication status indicator **54** indicates whether communication exists between the controller **44** of the vehicle charging cord **22** and a computer (e.g., a computer of the power utility **48**, the user's computer, a mobile phone, PDA, or other processor-based device as described above, and the like). For example, in the "OFF" state of the vehicle charging cord **22** illustrated in FIG. **6**, no communication exists between the controller **44** of the vehicle charging cord **22** and a computer, so the communication status indicator **54** displays an appropriate indicator. In the other states of the vehicular charging cord **22** illustrated in FIGS. **7-11**, including the states of FIGS. **10** and **11** where the vehicle charging cord **22** is in an "OFF" state but is not set to charge a battery, communication has been established and maintained between the controller **44** and a computer, so the communication status indicator **54** displays an indicator showing this status.

The first screen **40** of the vehicle charging cord **22** illustrated in FIGS. **2**, **5-11** and **15** also has a power connection status indicator **56**. The power connection status indicator **56** indicates whether an electrical connection exists between the vehicle charging cord **22** and a source of power (e.g., an electrical system of a house, office, facility, or other location) to charge a battery. When the first end **24** of the illustrated vehicle charging cord **22** is unplugged or is connected to an electrical system not providing power to the vehicle charging cord **22**, the power connection status indicator **56** displays such an indicator (see, for example, FIG. **6**). Otherwise, if a proper power connection is made, the connection status indicator **56** displays an appropriate indicator showing that such a connection has been made (see, for example, FIGS. **7-11**).

A clock **58** is also displayed on the first screen **40** shown in FIGS. **6-9**. Any form of clock can be displayed as desired, preferably indicating whether the displayed time is "A.M." or "P.M.". In some embodiments, time on the clock **58** is maintained by the controller **44** of the vehicle charging cord **22**, and can be maintained even if no power is supplied to the vehicle charging cord **22** (e.g., when the vehicle charging cord **22** is unplugged) by a battery of the vehicle charging cord **22**. Such a battery (not shown) can be connected to the controller **44** of the vehicle charging cord **22**, can be located within the housing **28**, and in some embodiments can be removed and replaced by a user as necessary via a door or other battery cover (also not shown). In these and other embodiments, the time displayed upon the clock **58** can be retrieved and displayed by the controller **44** from a computer upon establishment of communication with the computer in any of the manners described above.

The first screen **40** of the vehicle charging cord **22** illustrated in FIGS. **2**, **5-11** and **15** also has a battery charge level indicator **60**. Using any battery diagnostic circuitry desired, the controller **44** of the vehicle charging cord **22** can detect the level of charge of a battery **20** to which the vehicle charging cord **22** is connected (e.g., by the plug on the second end **26** of the vehicle charging cord **22** described above). The battery charge level indicator **60** illustrated in FIGS. **6-9** is a bar chart displaying charges ranging from 0% to 100%, and also displaying the percentage of full charge of a vehicle battery **20** to which the vehicle charging cord **22** is connected (e.g., 31% in FIG. **6**). However, other types of battery charge level indicators **60** can be used in other embodiments.

For example, the battery charge level indicator **60** can be simply a number (e.g., the percentage of full charge of the battery **20**, the exact charge level of the battery in amp-hours or in another unit of measurement, another number representative of the amount of charge of the battery **20** but not necessarily in units conventionally used to indicate battery charge, and the like). As another example, the battery charge level indicator **60** can also or instead include any other chart or visual representation, such as a pie chart, an escalating series of bars having different lengths, a symbol having different colors and/or brightness levels representing different battery charge levels, a gauge with a needle or other pointer, text in any language indicating the level of battery charge (e.g., "empty, very low, low, high, full"), and the like. The battery charge level indicator **60** can comprise any graphics, text, or combination of graphics and text to convey the level of charge of the battery **20** to a user, and can be any size desired on the first screen **40**. The controller **44** of the vehicular charging cord **22** can monitor the charge level of the battery **20** being charged, and can update the battery charge level indicator **60** continuously or on a periodic basis.

In some embodiments, the first screen **40** of the vehicular charging cord **22** also displays the voltage and/or amperage used to charge a battery **20** connected thereto. These voltage and/or amperage indicators are included in the embodiment of the vehicle charging cord **22** shown in FIGS. **2**, **5-11** and **15**, and are given reference numbers **62** and **64**, respectively.

As also shown in FIGS. **6-9**, the first screen **40** of the vehicle charging cord **22** can include other information regarding the status of a battery charging session performed by the vehicular charging cord **22**, including the amount of time estimated to completely charge the battery **20** (in minutes, minutes and hours, or in any other format), the estimated or actual amount of power already consumed during the present charging session (in kWh or in any other unit of measurement), the actual or estimated cost of charging the connected battery **20** per hour or other unit time, and/or the total actual or estimated cost of the current charging session to the present time. Each of these examples of information is displayed on the first screen **40** shown in FIGS. **6-9**, and is indicated with reference numbers **66**, **68**, **70**, and **72**, respectively.

The charge time remaining indicator **66** and the power used indicator **68** can be calculated by the controller **44** in any of a number of manners well known to those in the art of battery charging and electrical power metering technology. In this regard, it will be appreciated that the charge time remaining can be calculated taking into account the non-linear rate of charging for many batteries **20**, wherein the rate of battery charge at different levels of battery charge changes. Formulas for such estimates are well known to those skilled in the art of battery charging, and are not therefore described further herein. The charge cost per hour indicator **70** can be retrieved and displayed by the controller **44** from a computer upon establishment of communication with the computer in any of the manners described above, or can be manually entered into the vehicle charging cord **22** by a user using the user-manipulatable controls **30** and an appropriate data entry cell or menu on the display **32** (not shown). In those embodiments in which the charge cost per hour is retrieved from another computer as described above, the controller **44** can retrieve a cost per kWh figure directly from the power utility **48** (e.g., from the controller **50** of a computer of the power utility **48**), from the user's computer in which is stored a cost per kWh figure entered there or retrieved by the user's computer, and the like, and can multiply that figure by an estimated kWh level at which the vehicle charging cord **22** will charge the battery **20** to display the charge cost per hour **70** for the current battery charging session. The total cost to the present time for a charging session **72** can be calculated by the controller **44** simply by multiplying the values of indicators **68** and **70** together.

In some embodiments, any or all of the indicators **66**, **68**, **70**, and **72** can be updated periodically during a charging session, such as every second, minute, or other time interval. Any or all of the indicators **66**, **68**, **70**, **72** can be continually updated by receiving streaming data from the controller **50** of the power utility **48** or from the user's computer. For example, the charge time remaining indicator **66** can be updated by the controller **44** every second or minute based upon battery charge calculations made at the beginning of the charging session or made periodically during the charging session. As another example, the power used indicator can be updated by the controller **44** every second, minute, or in greater periods of time based upon the actual or estimated power delivered via the vehicle charging cord **22**. As yet another example, the charge cost per hour indicator **70** can be updated every second, minute or other time period based upon cost information retrieved by the controller **44** from the controller **50** of the power utility **48** or the user's computer, and/or can be updated immediately upon receiving streaming or batch-loaded power cost information from the controller **50** of the power utility **48** or the user's computer.

The first screen **40** of the vehicle charging cord **22** illustrated in FIGS. **2**, **5-11** and **15** also has a battery charge selector **74** by which a user can select the manner in which the vehicle charging cord **22** will charge a vehicle battery **20**. By pressing the navigation buttons **36** and then the select button **38** described above, a user can highlight a desired manner in which the vehicle charging cord **22** will charge a vehicle battery **20** connected thereto. The battery charge selector options illustrated in FIGS. **6-9** include "OFF", "PROGRAMMED CHARGE", AND "MANUAL CHARGE", any of which can be highlighted and selected by a user as just described. Although a radio button format of the battery charge selector **74** is illustrated in the embodiment of FIGS. **2**, **5-11** and **15**, the battery charge selector **74** can have any other form desired, including without limitation a drop-down or pop-up menu, and the like. Upon selecting the desired charge state as just described, the vehicle charging cord **22** can immediately begin a charging session by beginning to supply current to the battery **20** to which the vehicle charging cord **22** is connected (e.g., by closing a switch **92** coupled to the controller **44** as described in greater detail below), or can begin such a session after a user then presses the power button **34**. For example, if the power button **34** is selected after the "MANUAL CHARGE" button has been selected, the controller **44** can causes the switch **92** to close without delay in order to begin charging the vehicle battery **20**, whereas if the power button **34** is selected after the "PROGRAMMED CHARGE" button has been selected, the controller **44** can cause the switch **92** to close only after one or more conditions have been met as will be described in greater detail below. In any case, once a user commands and enables the vehicle charging cord **22** to begin charging immediately or to begin charging at a later time based upon a set of instructions as described elsewhere herein, a vehicle charging session begins.

The operational status of the vehicle charging cord **22** can be displayed by the vehicle charging cord **22** in a number of different manners and locations. For example, the vehicle charging cord status indicator **42** described above can be provided. Alternatively or in addition, one or more graphics (e.g., symbols, colors, and the like) providing the same general status indicators (e.g., off, charging in process, error) can be displayed elsewhere on the housing **28**, such as through a translucent or transparent portion of the housing **28**, through a lens located on the housing **28**, and the like. In this regard, one or more graphics can be printed on the interior and/or exterior of the housing **28**, can be invisible or substantially not visible to a user when not illuminated, and can be illuminated by one or more lamps, LEDs or other light sources within the housing **28** when such graphics are to be displayed. By way of example only, the controller **44** can display a battery charging symbol such as that shown in FIGS. **7** and **8** in a first charge status display area **76**A when a charging session is in process, or when the vehicle charging cord **22** is in the process of charging a battery **20** (as described in greater detail below, the battery **20** may not be actively charging the battery **20** at one or more times during a charging session). As another example, the controller **44** can display an error symbol such as that shown in FIG. **9** in the same or a different charge status display area **76**B when any of the battery charging errors described above

have been detected. Still other battery charging symbols indicating any other information regarding the status of the vehicle charging cord **22** and its operation can be displayed anywhere on the housing as a supplement to or in addition to the information shown on the display **32** described above. In some embodiments, one or more status display areas **76** as just described can even replace the display **32**.

With continued reference to the illustrated embodiment of FIGS. **2**, **5-11** and **15**, in some embodiments, the controller **44** of the vehicle charging cord **22** can display two or more different screens upon the display **32**. This control enables a user to view substantially more information than that available from other types of displays and from other types of controls and indicators on the housing **28**. By way of example only, two such alternative screens **40**A, **40**B are illustrated in FIGS. **10** and **11**, respectively, and can be accessed in a number of different manners. In some embodiments, each screen **40**, **40**A, **40**B is accessed by selecting a navigation button, such as by using navigation button **36** in the illustrated embodiment to highlight a desired navigation button on the screen **40**, **40**A, **40**B. In other embodiments, one or more navigation buttons **36** on the housing **28** are provided to move between screens **40**, **40**A, **40**B, such as forward and back buttons, a single button to scroll though two or more screens **40**, **40**A, **40**B, and the like. Although three different screens **40**, **40**A, **40**B can be shown upon the display **32** in the illustrated embodiment of FIGS. **2**, **5-11** and **15**, any other number of displays (e.g., 1, 2, 4, or more) can be shown upon the display **32**, and can include any number and arrangement of the indicators, selectors, and other information described herein. In still other embodiments, a single screen **40** is provided, only a portion of which is visible on the display **32** at any given time. In such cases, other portions of the screen **40** can be viewed by scrolling in any desired direction using one or more navigation buttons **36** or other user-manipulatable controls on the housing **28**.

In the illustrated embodiment of FIGS. **2**, **5-11** and **15**, the first screen **40** has two navigation buttons **78**, **80**, each of which causes the controller to display a different screen **40**A, **40**B when selected by a user in the manner described above. When a first "PROGRAM A CHARGE" navigation button **78** is selected by a user, the controller **44** replaces the first screen **40** with a second screen **40**A shown in FIG. **10**. This second screen **40**A enables a user to change the manner in which the vehicle charging cord **22** will operate to charge one or more batteries **20** connected thereto. The second screen **40**A also has navigation buttons **82**, **84** that can be selected by a user to return to the first screen **40**, whether by making one or more changes to operation of the vehicle charging cord **22** (by selecting the "GO" navigation button **84**), or by making no changes to operation of the vehicle charging cord **22** (by selecting the "CANCEL" navigation button **84**). In the illustrated embodiment, selection of either navigation button **82**, **84** on the second screen **40**A will return the user to the first screen **40**.

A valuable feature of the vehicle charging cord **22** of FIGS. **2**, **5-11** and **15** is the ability of a user to at least partially control when the vehicle charging cord **22** will begin to charge one or more batteries **20** connected thereto. In many geographic locations, times of day, and times of the year, the ability of power utilities **48** to supply the full power demand of users is limited or is inadequate. Although power utilities can often generate or otherwise obtain additional power at peak periods, such power often comes at a higher price to the power utility **48**. Regardless of whether a higher price is paid by the utility, higher power prices are often charged to consumers of the power utility **22** during peak periods. In many cases, power utilities **48** encourage their customers to consume power at non-peak periods, such as a nighttime, and often give significant discounts to those who consume power during such periods. The vehicle charging cord **22** of FIGS. **2**, **5-11** and **15** enables the user to take advantage of such cost savings by controlling when vehicle battery charging will occur. Even in those cases where savings to the power consumer are not provided, the vehicle charging cord **22** can be used to reduce power draw upon power utilities **48** at peak times and/or to better manage power consumption.

With reference to FIG. **10**, the second screen **40**A (entitled the "Programmed Charge" screen in FIG. **10**) can show any amount of the information shown on the first screen **40** described above, such as the vehicle charging cord status indicator **42**, the communication status indicator **54**, the power connection status indicator **56**, and the clock **58**. The second screen **40**A enables a user to select a time at which the vehicle charging cord **22** will begin charging a battery **20** connected thereto. For this purpose, the second screen **40**A has a button **86** that can be selected (e.g., by user manipulation of the navigation and select buttons **36**, **38** as described above) to set the vehicle charging cord **22** to begin charging at a desired time of day. This time of day can be changed and set by one or more time change buttons **88**, such as by using the navigation buttons **36** to highlight one of the time change buttons **88** and by using the select button **38** to change the charge start time **90** displayed on the second screen **40**A. Any other manner of changing and selecting a desired time can be used as desired, including without limitation drop down or pull-up menus displaying various charge start times that can be selected.

Once a charge start time has been selected by a user as just described, the user can select the navigation button **82** described above to return to the first screen **40**, and can command the vehicle charging cord **22** to begin a charging session by pressing the power button **34**. By doing so, the controller **44** of the vehicle charging cord **22** will compare the start time **90** entered by the user to the current time of day (e.g., displayed by the clock **58** as described above), and will begin charging the battery **20** at the entered charge start time **90**. With reference to FIG. **15**, the vehicle charging cord **22** can have a relay or other electrical switch **92** coupled to the controller **44** and operable by the controller **40** to close at the charge start time **90**. Once the charge start time **90** has been reached, the controller **40** can automatically close the switch **92**, thereby supplying a current to the battery **20** for charging the battery **20**. The switch **92** can remain closed until the controller **40** detects that the battery **20** is fully or sufficiently charged, until an error in charging is detected (as described above), or in some embodiments until a charge stop time or other triggering event occurs. When any such condition is reached, the switch **92** can open, thereby stopping current flow to the battery **20** and stopping the battery charging process. The vehicle charging cord **22** can be provided with any battery charge circuitry suitable for charging the battery **20**. Such battery charge circuitry is well know, and can include one or more voltmeters and/or amp meters for this purpose.

For example, the vehicle charging cord **22** illustrated in FIGS. **2**, **5-11** and **15** includes an amp meter **94** and a volt meter **96** electrically coupled to a power line **98** supplying power to the battery **20**. The controller **44** can utilize information from the amp meter **94** and/or volt meter **96** to determine whether the battery **20** is fully charged, and to

automatically stop charging the battery **20** (e.g., by opening the switch **92**) when the battery **20** is fully charged.

Accordingly, the vehicle charging cord **22** can be programmed to begin charging a battery **20** connected thereto at any time of day desired by a user. A user can therefore select an off-peak power time, and in some applications when the cost of power is reduced.

It will be appreciated that the time selected by a user to begin charging the battery **20** may not be the most optimal time for a power utility **48** to supply power for charging the battery **20**. For example, in an emergency or during an unexpected surge of power demand, an otherwise off-peak time to begin charging the battery **20** may not be desirable for the power utility **20**. As another example, widespread use of the vehicle charging cord **22** may result in surges of power demand at particular off-peak times, such as at midnight, 1 a.m., 2 a.m., or other charge start times that may be commonly selected by users in programming the vehicle charging cord **22** as described above. Another valuable feature of the vehicle charging cord **22** illustrated in FIGS. **2**, **5-11** and **15** can help to reduce or eliminate these problems. With reference again to FIG. **10**, the second screen **40**A has another button **100** that can be selected (e.g., by user manipulation of the navigation and select buttons **36**, **38** as described above) to set the vehicle charging cord **22** to complete charging by a desired time of day. This time of day can be changed and set by one or more time change buttons **102**, such as by using the navigation buttons **36** to highlight one of the time change buttons **102** and by using the select button **38** to change the charge completion time **104** displayed on the second screen **40**A. Any other manner of changing and selecting a desired time can be used as desired, including without limitation drop down or pull-up menus displaying various charge start times that can be selected.

Once a charge start time has been selected by a user as just described, the user can select the navigation button **82** described above to return to the first screen **40**, and can command the vehicle charging cord **22** to begin a charging session by pressing the power button **34**. In such cases, the controller **44** receives the charge completion time **90** and can delay the start time at which battery charging will commence based upon one or more factors (described below).

In some embodiments, the controller **44** automatically retrieves power information from a memory **106** coupled to the controller **44**. This power information can include the cost of power per unit time, one or more pre-set times, and the like, and can be saved in the memory **106** by the controller **44**. The controller **44** can receive the power information from the transceiver **46** of the vehicle charging cord **22**, which can receive the power information in communication with the controller **50** and transceiver **52** of the power utility **48** and/or in communication with the user's computer. This communication can occur in any of the manners described above regarding the communication between the controllers **44**, **50** and/or between the controller **44** and the user's computer. In this regard, the information can be originally produced by the power utility **48**, or can be produced by a user entering the information into the user's computer for transfer to the controller **44** and memory **106** of the vehicle charging cord **22**.

The controller **44** can delay the time at which battery charging will begin based upon the power information just described, whether stored in the memory **106** of the vehicle charging cord **22** or retrieved from the power utility **48** without being stored in the memory **106**. In some embodiments, the battery charging start determined by the controller **44** can be based upon a threshold cost of power reached over a period of time. This cost of power can be received periodically by the controller **44** from the power utility **48**, such as by the controller **44** of the vehicle charging cord **22** polling the controller **50** of the power utility **48**, or by the controller **50** of the power utility **48** regularly sending or streaming updated cost of power information to the controller **44** of the vehicle charging cord **22**. Upon reaching a desired cost of power (e.g., $0.50/hr., $0.45/hr., $0.40/hr.), the controller **44** of the vehicle charging cord **44** can automatically cause the switch **92** to close, thereby charging the vehicle battery **20**. This threshold cost of power can be input by a user into the vehicle charging cord **22** in any of the manners described above in connection with other information entry, such as by another data entry field similar to that of the desired charge start time **90** or the desired charge completion time **104**.

In some embodiments, the controller **44** can also automatically cause the switch **92** to open if a desired cost of power threshold is reached, thereby interrupting battery charging. In such cases, battery charging can resume in the same manner as it began when the cost of power lowers as detected by the controller **44** of the vehicle charging cord **22**. Any number of interruptions and resumptions in charging the vehicle battery **20** can take place in this manner.

In some embodiments, the controller **44** detects a command from the user to begin a charging session, and through communication with the controller **50** of the power utility **48** (whether initiated by the controller **44** of the vehicle charging cord **22** or initiated by the controller **50** of the power utility **48** by periodic polling or in any other manner), provides a signal to the controller **50** of the power utility **48** that a charging session has been requested. Upon receiving this signal, the controller **50** of the power utility **48** can request or otherwise receive the charge completion time **104** from the controller **44** of the vehicle charging cord **22**. In some embodiments, additional information regarding the charging session can also be received, such as the level of charge of the battery **20** connected to the vehicle charging cord **22**, and/or the estimated charge time remaining (discussed above in connection with the charge time remaining indicator **66**). Still other information can be received by the controller **50** of the power utility **48**, such as the capacity of the battery **20**, the battery type, the manufacturer of the battery **20**, the model or other identification information of the battery **20**, and/or the battery age.

Any or all of this information can be retrieved by or transmitted to the controller **44** of the vehicle charging cord **44** by communication with a controller **108** of the battery **20** (i.e., for batteries **20** having an integrated circuit or other controller adapted for communication with another controller, otherwise known as "smart batteries") or vehicle. For example, the battery capacity, type, manufacturer, model or other identification information, and/or age can be stored in a memory (not shown) of the battery **20** coupled to and accessible by a controller **108** of the battery **20**. This information can be stored in the memory of the battery **20** by the manufacturer, supplier, and/or servicer of the battery **20**, or in some embodiments by a user. As another example, any or all of this information can be stored in a memory (not shown) of the vehicle **18** coupled to and accessible by a controller **108** of the vehicle **18**. This information can be stored in the memory of the vehicle **18** by the manufacturer, supplier, and/or servicer of the vehicle **18**, or in some embodiments by a user. For example, upon installation of a battery into the vehicle **18**, the installer can access the controller **108** of the vehicle **18** in a conventional manner to record the battery capacity, type, manufacturer, model or

other identification information, and/or age in a memory associated with the vehicle **18**. Any of this information can be transmitted to or retrieved by the controller **44** of the vehicle charging cord **22** automatically upon connection to the vehicle **18** or at any other time, and in some embodiments can be stored in the memory **106** of the vehicle charging cord **22**. In some embodiments, any of this information can then be retrieved from the memory **106** of the vehicle charging cord **22** and/or from the memory of the vehicle **18** for transmission to the controller **50** of the power utility **48** or for determining when to begin charging a battery **20** based upon any of the embodiments described herein.

Based upon the battery information obtained by the power utility **48** as described above, the power utility **48** can determine an desirable time to begin charging the battery **20** connected to the vehicle charging cord **22**. This time can be based upon a number of factors that are specific to the requested charging session, such as the charge time completion for the requested charging session, as well as other factors that are independent of the requested charging session, such as the current and anticipated power draw by other customers of the power utility **48**, and/or the current and anticipated cost of power to the power utility **48**. Accordingly, based upon the battery information obtained by the power utility **48**, the power utility **48** can control when the vehicle charging cord **22** starts to charge the battery **20** connected thereto. This control can occur, for example, by sending a signal from the controller **50** of the power utility **48** to the controller **44** of the vehicle charging cord **22** at a desired start time to trigger closure of the switch **92**, or by sending a signal from the controller **50** of the power utility **48** to the controller **44** of the vehicle charging cord **22** to close the switch **92** at a particular future time (which time can be stored in the memory **106** of the vehicle charging cord **22** or can begin a timer counting to that particular time of day), or in other manners. In this manner, the power utility **48** can maintain a degree of control over power draw while still following an instruction by the user to complete a vehicle charging session by a desired time.

As just described, in some embodiments the power utility **48** can control when the vehicle charging cord **22** begins charging a battery **20** connected thereto. Alternatively or in addition, in some embodiments the power utility **48** can interrupt charging of a vehicle battery **20** in the event that it is desirable to delay the remainder of the charging process, such as during a surge of demand occurring while a battery **20** is being charged, in an emergency, and the like. This interruption can occur, for example, by sending a signal from the controller **50** of the power utility **48** to the controller **44** of the vehicle charging cord **22** at a desired interruption time to trigger the switch **92** to open, or by sending a signal from the controller **50** of the power utility **48** to the controller **44** of the vehicle charging cord **22** to open the switch **92** at a particular future time (which time can be stored in the memory **106** of the vehicle charging cord **22** or can begin a timer counting to that particular time of day), or in other manners. The power utility **48** can resume charging the vehicle battery **20** in the same manner as described above in connection with beginning to charge the vehicle battery **20**. Any number of interruptions and resumptions in charging the vehicle battery **20** can take place based upon the desires and needs of the power utility **48** and the power draw upon the power utility **48**.

Although it is desirable in some applications to delay the time at which charging of the vehicle battery **20** will begin based upon any of the embodiments described herein, it is also desirable in many cases to insure that a minimum level of battery power is immediately available to the user. This minimum level of battery power can be needed, for example, in case of emergency, or in the event that the user unexpectedly needs use of the vehicle **18**. In such cases, the vehicle charging cord **22** illustrated in FIGS. **2**, **5-11** and **15** has another valuable feature. With particular reference to FIG. **10**, the second screen **40**A of the illustrated vehicle charging cord **22** has a button **110** that can be selected (e.g., by user manipulation of the navigation and select buttons **36**, **38** as described above) to set the vehicle charging cord **22** to immediately begin charging the battery **20** until a minimum threshold level of battery charge has been reached regardless of whether a programmed charge has also been selected as described above. This minimum threshold level of battery charge can be changed and set by one or more charge level buttons **112**, such as by using the navigation buttons **36** to highlight one of the charge level buttons **112** and by using the select button **38** to change the minimum threshold level, of battery charge **114** displayed on the second screen **40**A. Any other manner of changing and selecting a desired minimum level of battery charge can be used as desired, including without limitation drop down or pull-up menus displaying various levels of battery charge that can be selected.

When the button **110** is selected (and in some embodiments, after the user selects the navigation button **82** described above to return to the first screen **40**, and after the user commands the vehicle charging cord **22** to begin a charging session by pressing the power button **34**), the controller **44** determines whether the charge level of the vehicle battery **20** connected thereto is below the threshold input by the user. The battery charge level can be determined as described above. If the battery charge level is below the threshold input by the user, or in some cases at or below the threshold input by the user, the controller **44** of the vehicle charging cord **22** automatically causes the switch **92** to close, thereby charging the vehicle battery **20** without delay. If the user has also requested a programmed charge as described above, the vehicle charging cord **22** continues to charge the vehicle battery **20** until the minimum threshold level of battery charge **114** has been reached. At this time, the vehicle charging cord **22** resumes operation in programmed mode. For example, if the charge start time **90** has already passed or if the current cost of power is below the desired cost of power as described above, the controller **44** can continue to charge the vehicle battery **20**, and can do so without interruption following battery charging to the minimum threshold level of battery charge as just described. As another example, if the power utility **48** had determined that the vehicle battery **20** should be charged (e.g., based at least in part upon a charge completion time **104** entered by a user as also described above), the controller **44** can continue to charge the vehicle battery **20**, and can do so without interruption following battery charging to the minimum threshold level of battery charge as just described.

Of course, if the vehicle charging cord **22** is operating in a manual charge mode (e.g., not based upon a time of day as selected using buttons **86** and **100**), the vehicle charging cord **22** can begin to charge the vehicle battery **20** immediately after the user presses the power button **34**, regardless of the degree to which the battery charge has been depleted.

In some embodiments, user control over additional functions and features of the vehicle charging cord **22** is enabled by further controls and menus. Additional controls and menus can be shown on the display **32** in either or both of the screens **40**, **40**A described above, or in any number of

additional screens. By way of example only, the vehicle charging cord **22** of the embodiment illustrated in FIGS. **2**, **5-11** and **15** has a third screen **40**B shown in FIG. **11**. This third screen **40**B can be a utilities screen accessed by a user when the "UTILITIES" navigation button **80** is selected in a manner as described above. The third screen **40**B also has navigation buttons **116**, **118** that can be selected by a user to return to the first screen **40**, whether by making one or more changes to operation of the vehicle charging cord **22** (by selecting the "GO" navigation button **116**), or by making no changes to operation of the vehicle charging cord **22** (by selecting the "CANCEL" navigation button **118**). In the illustrated embodiment, selection of either navigation button **116**, **118** on the third screen **40**B will return the user to the first screen **40**.

With continued reference to FIG. **11**, the third screen **40**B can show any amount of the information shown on the first screen **40** described above, such as the vehicle charging cord status indicator **42**, the communication status indicator **54**, the power connection status indicator **56**, and the clock **58**. The third screen **40**B can include a battery charge rate selector **120** enabling a user to change the amperage at which the vehicle charging cord **22** charges a battery **20** connected to the vehicle charging cord **22**. This amperage can be changed and set by one or more amperage level buttons **122**, such as by using the navigation buttons **36** to highlight one of the amperage level buttons **122** and by using the select button **38** to change the amperage of the vehicle charging cord **22** displayed on the third screen **40**B. Any other manner of changing and selecting a charging amperage can be used as desired, including without limitation drop down or pull-up menus displaying various charging amperages that can be selected. Although not shown in FIG. **11**, in other embodiments, a similar selector can be used to also or instead change the voltage at which the vehicle charging cord **22** charges a battery **20** connected to the vehicle charging cord **22**.

Additional features that can be used in any of the vehicle charging cord embodiments described and/or illustrated herein relate to communication settings of the vehicle charging cord **22**. For example, the third screen **40**B of the vehicle charging cord **22** illustrated in FIGS. **2**, **5-11** and **15** includes a selector **124** that can be selected by a user to enable and disable Bluetooth® wireless communication with another controller, such as the processor of a user's computer. In other embodiments, the same or different selector can be used to enable and disable other types of wireless and wired communication with another controller. The third screen **40**B of the illustrated embodiment also has a selector **126** that can be selected by a user to enable and disable wireless and/or wired communication with a power utility **48**.

In some embodiments, the controller **44** of the vehicle charging cord **22** can send a communication to the user in the event that one or more different events associated with a vehicle charging session occur. By way of example only, by using conventional power detection circuitry, the controller **44** can detect when a supply of power to the vehicle charging cord **22** has been interrupted, such as in a power failure in the electrical system of the user, at the power utility, or anywhere in between. Identifying and communicating this status to a user can be very important to the user, enabling the user to find another source of electrical power to charge the user's vehicle **18**, or at least enabling the user to make appropriate plans based upon the existing level of charge in the vehicle battery **20**. As another example, and by using conventional battery diagnostic circuitry, the controller **44** can detect when the battery **20** connected thereto is fully charged or has reached any other level of charge (e.g., a minimum battery charge level as described above). Still other events that can be detected and communicated to the user include a battery fault condition, a problem with the vehicle charging cord **22**, and the like.

Upon detection of any of the events just described, the controller **44** of the vehicle charging cord **22** can send a communication to the user providing notice of the event. For example, the third screen **40**B of the vehicle charging cord **22** shown in FIG. **11** includes a selector **128** that can be selected by a user to enable and disable the controller **44** automatically sending a communication indicating that power supply to the vehicle charging cord **22** has been interrupted. As another example, the third screen **40**B of the vehicle charging cord **22** shown in FIG. **11** includes a selector **130** that can be selected by a user to enable and disable the controller **44** automatically sending a communication indicating that the battery **20** to which the vehicle charging cord **22** is connected is fully charged.

The controller **44** of the vehicle charging cord **22** can communicate any of the events described above in a number of different manners. For example, the vehicle charging cord **22** can have a speaker or other sound emitting device (not shown) coupled to the controller **44** and capable of emitting an auditory alarm when any of the above-described events have occurred. The audible alarm can be emitted once upon the occurrence of the event, or can be emitted upon the occurrence of the event and at periodic times (e.g., every 5 minutes, every hour, and the like) after the occurrence of the event. As another example, the controller **44** of the vehicle charging cord **22** can transmit a wired or wireless signal to the user's computer and/or to the power utility **48** (i.e., to the controller **50** of the power utility **48**) in any of the manners of communication described above in connection with the controller **50**. Such a signal can automatically trigger a visual or auditory alarm or other notice via the user's computer and/or the controller **50** of the power utility **48**, such as by automatically generating a text message or e-mail from the controller **50** of the power utility **48** to a computer, phone, PDA, or other device of the user, by automatically generating a text message or e-mail from the user's computer to a phone, PDA, or other device of the user, by displaying an alert on the user's computer, and the like. Another mode of communication to the user include an automatically generated telephone call from the power utility **48** (triggered by and/or under control of the controller **50**) or the user's computer to a phone of the user, followed by an automatically generated voice message communicating the event and played by phone to the user when the phone is answered. Still other modes of alerting the user to any of the events described above are possible, and fall within the spirit and scope of the present invention.

In the illustrated embodiment of FIGS. **2**, **5-11** and **15**, the controller **44** of the vehicle charging cord **22** responds to detection of power interruption or completion of battery charge by either causing an e-mail to be sent to the user and/or by generating an auditory alarm from the vehicle charging cord **22** based upon whether respective selectors **132**, **134** for such modes of communication are selected on the third screen **40**B illustrated in FIG. **11**. In other embodiments, other modes of communication can be similarly enabled and disabled by selection of other selectors.

FIG. **12** illustrates another embodiment of a vehicle charging cord according to the present invention. This embodiment employs much of the same structure and has many of the same properties as the embodiments of the vehicle charging cord described above in connection with

FIGS. **2**, **5-11** and **15**. Accordingly, the following description focuses primarily upon the structure and features that are different the embodiments described above in connection with FIGS. **2**, **5-11** and **15**. Reference should be made to the description above in connection with FIGS. **2**, **5-11** and **15** for additional information regarding the structure and features, and possible alternatives to the structure and features of the vehicle charging cord illustrated in FIG. **12** and described below. Structure and features of the embodiment shown in FIG. **12** that correspond to structure and features of the embodiment of FIGS. **2**, **5-11** and **15** are designated hereinafter in the 200 and 300 series of reference numbers.

The embodiment of the vehicle charging cord **222** shown in FIG. **12** provides an example of how the various indicators, selectors, and user-manipulatable controls can take different forms and be located in different positions and arrangements on the housing **228**, and how the vehicle charging cord **222** can have any sub-combination of the features and elements described above (e.g., any sub-combination of the various indicators, selectors, and user-manipulatable controls described above). The illustrated vehicular charging cord **222** does not have an LCD display as shown in the embodiment of FIGS. **2**, **5-11** and **15**, and instead has a number of LED displays and indicators. For example, the illustrated vehicular charging cord **222** utilizes an LED display for the battery charge level indicator **260**, clock **258**, charge time remaining indicator **266**, power used indicator **268**, charge cost per hour indicator **270**, total cost indicator **272**, and charge start time/charge completion time indicator **290**, **304** (both of which are combined into a common indicator as shown). As another example, the illustrated vehicular charging cord **222** utilizes individual LED lights for the vehicle charging cord status indicator **242** and the communication status indicator **254**. The use of LED displays and LED lights can reduce manufacturing costs of the vehicle charging cord **222**, and in some embodiments can provide a design of the vehicle charging cord **222** less susceptible to damage compared to the use of LCD and other displays.

As described above in connection with the illustrated embodiment of FIGS. **2**, **5-11** and **15**, the battery charge level indicator **260** and clock **258** can display information in any form desired. For example, the battery charge level indicator **260** shown in FIG. **12** is a numerical percentage of full charge, but can take any of the other forms described above in connection with the battery charge level indicator **60** of the embodiment of FIGS. **2**, **5-11** and **15**.

In contrast to the selectors **74** on the first screen **40** in the embodiment of FIGS. **2**, **5-11** and **15**, the selectors **274** in the illustrated embodiment of FIG. **12** are individual buttons of any conventional type, including any of the button types described above in connection with the power, navigation, and select buttons **34**, **36**, **38** of the embodiment of FIGS. **2**, **5-11** and **15**. By pressing any of the four buttons **274**, a user can start a manual charge, start a programmed charge of the type described above in connection with the charge start time **90** illustrated in FIG. **10** (i.e., start charging at a time entered by the user), start a programmed charge of the type described above in connection with the charge completion time **104** illustrated in FIG. **10** (i.e., start charging based upon power utility control and complete charging by a time entered by the user), and stop the vehicle charging cord **222** from charging a battery **20** connected thereto.

Also, in contrast to the time change buttons **88**, **102** on the second screen **40**A in the embodiment of FIGS. **2**, **5-11** and **15**, the time change buttons **288**, **302** in the illustrated embodiment of FIG. **12** are mechanical buttons of any type, including any of the button types described above in connection with the power, navigation, and select buttons **34**, **36**, **38** of the embodiment of FIGS. **2**, **5-11** and **15**. By pressing on the buttons **288**, **302** to the left of the charge start time/charge completion time indicator **290**, **304**, the hour of the time displayed by the charge start time/charge completion time indicator **290**, **304** can be adjusted, whereas by pressing on the buttons **288**, **302** to the right of the charge start time/charge completion time indicator **290**, **304**, the minutes of the time displayed by the charge start time/charge completion time indicator **290**, **304** can be adjusted. In other embodiments, any other number, position, and type of time change buttons can be used to adjust the time on the charge start time/charge completion time indicator **290**, **304**. Following entry of a desired time, a user can press any of the first three selectors **274** (followed in some embodiments by pressing the power button **234**) to begin a charging session.

Although LEDs are used in the illustrated embodiment of FIG. **12** for various indicators and selectors **258**, **260**, **242**, **254**, **266**, **268**, **270**, **272**, **290**, **304**, any other type of light-emitting device can instead be used as desired.

The various embodiments of the vehicle charging cords **22**, **222** described above and illustrated in FIGS. **2**, **5-12** and **15** can provide significant advantages relating to the portability of the vehicle charging cords **22**, **222**. By virtue of the fact that the opposite ends **24**, **26** of the vehicle charging cords **22**, **222** are releasably connected to an electrical system providing a source of electrical power and to the battery **20** of a vehicle, respectively, and by virtue of the fact that the other components of the vehicle charging cord cords **22**, **222** are contained within a housing to define a single integral unit, the vehicle charging cords **22**, **222** are portable, can be readily moved from vehicle to vehicle, can thereby be used to charge any number of different vehicles, and can be moved into and out of (and can be transported by) vehicles with ease. Also, portable charging cords **22**, **222** of the type described above and illustrated in FIGS. **2**, **5-12** and **15** can be purchased by a user and can be releasably connected to the battery **20** of a vehicle **18**, thereby eliminating the need to service the vehicle **18** or to the electrical system at which the vehicle will be charged. This can be particularly useful in cases where the ability to charge the battery **20** of the vehicle **18** in different locations only having standard electrical outlets (and otherwise not being specially adapted to charge electric vehicles) is important or desirable.

In other embodiments, either end **24**, **26** of the charging cord **22**, **222** can be permanently secured to the electrical system of the house, building, or other facility and/or to the vehicle **18**, **218**, respectively. For example, one end **24** of the charging cord **22**, **222** can be permanently secured to the electrical system of the house, building, or other facility (i.e., not intended or adapted for removal by a user, such as by being wired directly into a junction box or circuit breaker of the electrical system of the house, building, or other facility). In such cases, the charging cord **22**, **222** can be wound upon and stored in a floor standing, wall-mounted, or ceiling-mounted reel (not shown), such as those disclosed in U.S. Pat. No. 6,439,360, the entire disclosure of which is incorporated herein by reference. The reel can be spring-loaded to enable the vehicle charging cord **22**, **222** to be easily wound upon the reel for storage, or can be manually turned for this purpose. In such embodiments, the majority, all, or almost all of the length of the charging cord **22**, **222** can be defined between the housing **28**, **228** and the end **226** of the charging cord **22**, **222** intended for connection to the electrical system of the facility. In this manner, the majority or almost all of the vehicle charging cord **22**, **222** can be conveniently

stored. Such vehicle charging cords provide a significant benefit to users desiring to charge two or more vehicles **18**, **218** at the same facility using the same vehicle charging cord **22**, **222**, such as for charging one vehicle **18**, **218** during the day and for charging another vehicle **18**, **218** at night using the same vehicle charging cord **22**, **222**. The use of one vehicle charging cord **22**, **222** for two or more vehicles **18**, **218** can provide significant cost savings to the user(s) of the vehicles **18**, **218**.

As another example, one end **26** of the charging cord **22**, **222** can be permanently secured to the vehicle **18**, **218** (i.e., not intended or adapted for removal by a user, such as by being permanently connected to one or more wiring harnesses of the vehicle, or by being connected to an electrical junction box or fuse box of the vehicle **18**, **218**). In such cases, the charging cord **22**, **222** can also be wound upon and stored on a reel (not shown) carried by the vehicle **18**, **218**, such as the reels disclosed in U.S. Pat. No. 6,439,360 and incorporated by reference above. The reel can be mounted directly to the frame of the vehicle **18**, **218**, an interior surface of a body part of the vehicle **18**, **218**, to a bracket or other fixture (e.g., radiator mounting bracket, alternator or battery mounting bracket, and the like) of the vehicle **18**, **218**, to the front or rear bumper of the vehicle **18**, **218**, or to any other location providing suitable strength to carry the reel and vehicle charging cord **18**, **218**. As described above, the reel can be spring-loaded to enable the vehicle charging cord **22**, **222** to be easily wound upon the reel for storage on the vehicle, or can be manually turned for this purpose. In such embodiments, the majority, all, or almost all of the length of the charging cord **22**, **222** can be defined between the housing **28**, **228** and the end **224** of the charging cord **22**, **222** intended for connection to the vehicle **18**, **218**. In this manner, the majority or almost all of the vehicle charging cord **22**, **222** can be conveniently stored on the vehicle. The vehicle-mounted vehicle charging cord **22**, **222** provides a significant benefit for users needing to charge their vehicle battery **20**, **220** in multiple locations, as the vehicle charging cord **22**, **222** is conveniently carried by the vehicle **18**, **218** from destination to destination.

Although reel-based vehicle charging cords as just described are described in connection with vehicle charging cords **22**, **222** not intended for release by a user from both the vehicle **18**, **218** and the electrical system of the facility, it should be noted that the other portable vehicle charging cord embodiments described and/or illustrated herein (i.e., those intended for user release at both ends) can also include a spring-loaded or non-spring-loaded reel as just described. In this manner, such vehicle charging cords **22**, **222** can be quickly and conveniently placed in a relatively portable and compact state.

FIGS. **13**, **14**, and **16** illustrate an embodiment of a vehicle charging system according to the present invention. This embodiment employs much of the same structure and has many of the same properties as the embodiments of the vehicle charging cord described above in connection with FIGS. **2**, **5-12** and **15**. Accordingly, the following description focuses primarily upon the structure and features that are different the embodiments described above in connection with FIGS. **2**, **5-12** and **15**. Reference should be made to the description above in connection with FIGS. **2**, **5-12** and **15** for additional information regarding the structure and features, and possible alternatives to the structure and features of the vehicle charging system illustrated in FIGS. **13**, **14**, and **16** and described below. Structure and features of the embodiment shown in FIGS. **13**, **14**, and **16** that correspond to structure and features of the embodiment of FIGS. **2**, **5-12** and **15** are designated hereinafter in the 400 and 500 series of reference numbers.

Despite the significant advantages provided by the portable vehicle charging cords **22**, **222** described above in connection with FIGS. **2**, **5-12** and **15**, other significant advantages are realized by incorporating the elements and features of the vehicle charging cords **22**, **222** into a vehicle **18**. With reference to FIGS. **13**, **14**, and **16**, the illustrated vehicle charging system uses much of the same elements and features described above in connection with the various embodiments of the vehicle charging cords **22**, **222**. In this regard, FIG. **13** illustrates a portion of the dashboard of a vehicle **18**, and includes a battery charge level indicator **460** integrated into the same part of the vehicle dashboard as an oil temperature indicator **538**. Also integrated into the same portion of the dashboard, by way of example only, is a vehicle charging status indicator **442**. The vehicle charging status indicator **442** shown in FIG. **13** can be similar to the charge status display area **76** described above in connection with the vehicle charging cord **22** of FIGS. **2**, **5-11** and **15**. Accordingly, one or more lights can be used to illuminate the words "MANUAL CHARGING IN PROCESS" when the vehicle battery charging system is in a manual charging mode as described above, whereas one or more other lights can be used to illuminate the words "PROGRAMMED CHARGE IN PROCESS" when the vehicle battery charging system is in a programmed charging mode as also described above. Any other manner of displaying the vehicle charging status indicator **442** can be used as desired, including without limitation an LED or LCD display, one or more lamps adjacent printed graphics, and the like.

With continued reference to the illustrated embodiment of FIGS. **13**, **14**, and **16**, the illustrated vehicle charging system can include a display **432** located in the console of the vehicle **18**. As used herein, the term "console" refers to any portion of the interior of a vehicle (i.e., in the interior passenger cabin of the vehicle) having one or more manual or electronic controls for controlling operation of a vehicle **18** and/or one or more indicators showing the status of vehicle operation. For example, the console of a vehicle **18** can include a dashboard having a speedometer, odometer, RPM gauge, oil temperature gauge, and the like, a navigation screen with associated indicators and/or controls, HVAC indicators and controls, an entertainment center (e.g., radio, DVD or other video system, CD, MP3 or other audio system, and the like) with associated indicators and controls, environmental temperature indicators, travel direction indicators, and the like. The console can be located immediately in front of the driver, to either side of the driver, in central forward area of the vehicle cabin, in an area between the driver's seat and an adjacent passenger seat, in an interior location on the roof or otherwise at a higher elevation than a horizontal line of sight of the user, and the like. Also, the console of the vehicle can extend to and be positioned in any combination of these interior vehicle locations, such as a single console including the dashboard and central area between the driver and passenger seats.

In some embodiments, the selectors and indicators (including any displays) of the vehicle charging system are located in their own dedicated console, whereas in other embodiments, the console carrying such features also carries other vehicle indicators and controls. Also, the selectors and indicators (including any displays) of the vehicle charging system can be located in two or more consoles, if desired, such as one or more indicators located in the dashboard console of the vehicle **18** and the remainder located in

another console located between the driver and passenger at the front of the passenger compartment. Any combination of selectors and indicators located in any combination of vehicle consoles is possible, and falls within the spirit and scope of the present invention.

The display **432** shown in FIG. **14** is a touch screen display **432**, and includes many of the same indicators and selectors used in the vehicle charging cord embodiments described above in connection with FIGS. **2**, **5-11** and **15**. In particular, the display **432** includes a charge time remaining indicator **466**, power used indicator **468**, charge cost per hour indicator **470**, and total cost indicator **472** like those of the vehicle charging cords **22**, **222** described and illustrated above. Also, the illustrated display **432** includes another vehicle charging status indicator **442** that can be used in addition to or in place of that shown in FIG. **13**, and a communication status indicator **454** and power connection status indicator **456** similar to those described above in connection with the illustrated embodiment of FIGS. **2**, **5-11** and **15**. Although a clock can also be included on the display **432**, a clock is not included in the display **432** of FIG. **14** in lieu of another clock of the vehicle **18** located elsewhere on the dashboard or console of the vehicle **18**. This other clock can be connected to the same controller **444** (see FIG. **16**) as the rest of the vehicle charging system, thereby providing the controller **444** with the time of day information needed to begin programmed charging operations as described above.

The display **432** illustrated in FIG. **14** can display multiple screens **440** to be shown upon the display **432**, thereby enabling a significantly greater amount of battery and battery charging information to be shown on the display, and/or enabling a greater degree of control over the vehicle charging system. Like the vehicle charging cords **22**, **222** described above, navigation between screens **440** on the display **432** is enabled by navigation buttons on the screens. For example, the screen **440** shown in FIG. **14** includes two navigation buttons **478**, **480** like those of the illustrated embodiment of FIGS. **2**, **5-11** and **15** described above. By pressing one of the navigation buttons **478** (entitled "PROGRAMMED CHARGE SETUP"), the screen **440** is replaced by a charge programming screen (not shown) having any or all of the indicators and selectors **42**, **54**, **56**, **58**, **82**, **84**, **86**, **88**, **90**, **100**, **102**, **104**, **110**, **112**, and/or **114** described above in connection with the second screen **40**A in FIG. **10**. These indicators and selectors can have the same or any other arrangement upon the programming screen. By pressing the other navigation button **480** (entitled "UTILITIES"), the screen **440** is replaced by a utilities screen (also not shown) having any or all of the indicators and selectors **42**, **54**, **56**, **58**, **116**, **118**, **120**, **122**, **124**, **126**, **128**, **130**, **132**, and/or **134** described above in connection with the third screen **40**B in FIG. **11**. These indicators and selectors can have the same or any other arrangement upon the utilities screen.

To begin or stop a manual or programmed charging session, the embodiment of the present invention illustrated in FIGS. **13**, **14**, and **16** can include a single power button that in some embodiments can change text to indicate whether a selection can be made by a user to start or stop a charging session (e.g., changing from "START CHARGE" to "STOP CHARGE" once a user selects "START CHARGE", or changing from "STOP CHARGE" to "START CHARGE" once the user selects "STOP CHARGE"). In other embodiments, such as that shown in FIGS. **13**, **14**, and **16**, the screen **440** can include separate buttons **434**A, **434**B to start or stop a charging session, such as to start a manual charge if none of the selectors for a programmed charge have been selected on a programming screen, or to start a programmed charge of any type described herein.

Although the in-console display **432** illustrated in FIG. **14** is a touch screen display **432**, the display **432** can be any other type of display, such as the other types of displays described and illustrated herein. For example, the touch screen display **432** can be replaced by a display such as that shown in FIGS. **5-11** or FIG. **12**, in which cases the vehicle charging system can include navigation buttons (e.g., adjacent the display **432**) enabling a user to navigate through a screen and to select any selectors upon the display **432**. As another example, the touch screen display **432** can be replaced by any combination of buttons, switches, dials, or other user-manipulatable controls; LEDs and other lights; and displays (e.g., see FIG. **12**).

A schematic diagram of the vehicle charging system in which an in-console display **432** is utilized and/or in which the in-console vehicle charging selectors and indicators are otherwise utilized is shown in FIG. **16**. Like the embodiments of FIGS. **2**, **5-12** and **15** described above, the system illustrated in FIG. **16** is releasably coupled to a source of power **412** operated and controlled by a power utility **448** having a transceiver **452** and controller **444** (e.g., a computer) that can communicate via a PLC system with the controller **444** of the vehicle charging system. In the illustrated embodiment of FIG. **16**, however, the display **432** and other controls and indicators are located in one or more in-cabin consoles of the vehicle **418**. Therefore, a power cord **540** having ends **424**, **426** described above in connection with the embodiments of FIGS. **2**, **5-12** and **15** (but without the housing and other components carried in or on the housing) can be used to releasably connect the battery **420** of the vehicle **418** with the electrical system of the facility used to charge the battery **420** as also described above. As with the earlier-described embodiments, the power cord **540** can be releasably coupled to the vehicle **418**, and in other embodiments can instead be stored on-board the vehicle **418** when not in use (e.g., by a cord reel mounted on the vehicle as described above). Also as with the earlier-described embodiments, the power cord **540** can also or instead be releasably coupled to the electrical system of the house, office, or other facility to enable the power cord **540** to be more readily and easily moved within and removed from the facility, or can be permanently connected to the electrical system.

With continued reference to FIG. **16**, the illustrated vehicle charging system also includes a transceiver **446** for communication between the controller **444** on board the vehicle **418** and the transceiver **452** and controller **440** of the power utility **448**, a power transformer **536**, an amp meter **494**, a volt meter **496**, a switch **492**, and a memory **506** performing the same functions described above in conjunction with the embodiments of FIGS. **2**, **5-12**, and **15**. It should be noted that the controller **444** of the vehicle charging system can be a dedicated controller (e.g., a processor or set of discrete logic elements) separate from the other controllers of the vehicle (e.g., those used to control vehicle startup, vehicle access and security, and engine operation, smart battery controllers, and the like), or can be the same as such other controller(s). Accordingly, the electronics of the vehicle charging system according to some embodiments of the present invention can be fully or partially integrated into one or more other controllers of the vehicle, or can be separate therefrom. In either case, the controller **444** can be located within a housing (not shown),

and can be connected via suitable wiring harnesses or other wired or wireless electrical connections to an electrical connector on the vehicle (adapted for releasable mating connection to an external power cord as described above) or to a power cord carried by the vehicle as also described above. Similarly, the memory **506**, transceiver **446**, and clock can be dedicated solely for operation of the vehicle charging system as described in earlier embodiments, or can instead be shared by other systems of the vehicle **418**.

The vehicle charging system shown in FIG. **16** can function in the same manners described above in connection with the embodiments of FIGS. **2**, **5-12**, and **15**, it being understood that communications, power control, programming, and other features of the vehicle charging system are performed on-board the vehicle **418** rather than in a vehicle charging cord as shown in FIGS. **2**, **5-12**, and **15**. Accordingly, power supply and communications in the embodiment of FIG. **16** can include power supply and communications over one or more suitable power cords, wiring harnesses, and the like of the vehicle performing the same functions (including PLC and power transmission functions) as the flexible power cords on both sides of the housings **28**, **228** illustrated in FIGS. **2** and **5-12**.

FIG. **3** illustrates another embodiment of a vehicle charging system according to the present invention. This embodiment employs much of the same structure and has many of the same properties as the embodiments of the vehicle charging cord described above in connection with FIGS. **2**, **5-12** and **15**. Accordingly, the following description focuses primarily upon the structure and features that are different the embodiments described above in connection with FIGS. **2**, **5-12** and **15**. Reference should be made to the description above in connection with FIGS. **2**, **5-12** and **15** for additional information regarding the structure and features, and possible alternatives to the structure and features of the vehicle charging system illustrated in FIG. **3** and described below. Structure and features of the embodiment shown in FIG. **3** that correspond to structure and features of the embodiment of FIGS. **2**, **5-12** and **15** are designated hereinafter in the 600 and 700 series of reference numbers.

The vehicle charging system illustrated in FIG. **3** operates in substantially the same manner as that of FIGS. **2**, **5-12** and **15**. However, in the illustrated embodiment of FIG. **3**, the vehicle charging system is embodied in a cabinet **742**. The cabinet **742** performs functions similar to the housings **28**, **228** described and illustrated herein, such as to house the controller, transformer, and other electronics of the vehicle charging system. In some embodiments, the cabinet **742** can be wall-mounted and/or floor-mounted (such as that shown in FIG. **3**).

The cabinet **742** of the vehicle charging system can include a display **732** having any of the features and performing any of the functions described above in connection with the displays **32** of the embodiments shown in FIGS. **2**, **5-11**, **14**, and **15**. The display **732** can be a touch screen display or any other type of display as described herein, and can be accompanied by any number and type of user manipulatable controls (e.g., navigation buttons) as also described herein. Any combination of selectors and indicators (including displays) described and/or illustrated herein can be provided on the cabinet to perform the vehicle charging functions also described herein.

In some embodiments, the cabinet **742** is provided with a power cord **744** terminating in a plug **624** that can be releasably connected to a vehicle **618** (and to the battery **620** thereof). The plug **624** can take any of the forms described above in connection with the embodiments of FIGS. **2**, **5-12**, and **15**. In some embodiments, the power cord **744** can be stored on a reel (not shown) in or adjacent the cabinet **742**. The reel can take any of the forms described above in connection with other embodiments of the present invention. Although the cabinet **742** can provide a convenient location for storage of the power cord **744**, the power cord **744** can instead be permanently or releasably coupled to the vehicle **618** for storage on the vehicle **618** when the power cord **744** is not in use. For example, the power cord **744** can be stored upon a reel of the vehicle **618** as described in greater detail above. In those embodiments in which the power cord **744** is intended to be stored and carried by the vehicle **618**, the power cord **744** can have an opposite end terminating in a plug (such as any of the plugs described above in connection with plug **26** shown in FIG. **5**). The cabinet **742** can be provided with any number of electrical connectors for releasable mating engagement with the plug (and for any number of other plugs on power cords **744** extending to other vehicles **618**).

FIG. **17** illustrates another embodiment of a vehicle charging system according to the present invention. This embodiment employs much of the same structure and has many of the same properties as the embodiments of the vehicle charging system described above in connection with FIGS. **2**, **3**, and **5-16**. Accordingly, the following description focuses primarily upon the structure and features that are different the embodiments described above in connection with FIGS. **2**, **3**, and **5-16**. Reference should be made to the description above in connection with FIGS. **2**, **3**, and **5-16** for additional information regarding the structure and features, and possible alternatives to the structure and features of the vehicle charging system illustrated in FIG. **17** and described below. Structure and features of the embodiment shown in FIG. **17** that correspond to structure and features of the embodiments of FIGS. **2**, **3**, and **5-16** are designated hereinafter in the 800 and 900 series of reference numbers.

Like the embodiment of FIGS. **2**, **3**, and **5-16**, the vehicle charging system of FIG. **17** also includes a transceiver **846** for communication between a controller **844** and the transceiver **852** and controller **840** of the power utility **848**, a power transformer **836**, an amp meter **894**, a volt meter **896**, a switch **892**, and a memory **906** performing the same functions described above in conjunction with the embodiments of FIGS. **2**, **5-12**, and **15**. A clock **858**, display **832**, and associated user-manipulatable controls as described above (or other types and combinations of selectors and indicators, with or without displays) are also included for providing information to the user and for receiving instructions from the user in any of the manners also described above.

The vehicle charging system of FIG. **17** includes a battery **946** that can be charged in any of the same manual or programmed manners described above in connection with the embodiments of FIGS. **2**, **3**, and **5-16**. The battery **946** is separate from the battery **920** of the vehicle **918**, and can have any size sufficient for at least partially charging the battery **920** of the vehicle **918** when connected thereto. Rather than or in addition to charging a battery **920** of the vehicle **918** as described herein in connection with other embodiments of the present invention, the vehicle charging system of FIG. **17** operates to charge the battery **946** that remains at the house, building, or other facility at which vehicle charging takes place. The battery **946** therefore functions as a reservoir of power that can collect and store a charge for later transfer to batteries **946** of one or more vehicles **918**. Accordingly, although the battery **946** can have any size suitable for charging a battery **920** of a vehicle

918, in some embodiments the battery 946 has a capacity capable of fully charging the battery 920 of at least one vehicle 918 when the battery 920 of the vehicle 918 has no charge or substantially no charge.

The battery 946 can be located anywhere in a house, building, or other facility where vehicle battery charging is desired, and in some embodiments is located an a garage in which the vehicle is stored. For example, the battery 946 can be stored in a cabinet also housing the rest of the vehicle charging system (e.g., in a lower portion of the cabinet 742 illustrated in FIG. 3). In some embodiments, the battery 946 can be sufficiently oversized (in voltage, current, or capacity) for completely charging a drained vehicle battery 920 connected thereto so that improved or optimized battery charging conditions can be achieved. The battery 946 can also be oversized to carry sufficient charge for charging two or more fully or substantially discharged vehicle batteries 920. Also, in some embodiments, the vehicle charging system can have one or more power converters (e.g., DC to DC converters) to increase the output voltage of the battery 946 sufficiently for charging the vehicle battery 920.

With continued reference to the illustrated embodiment of FIG. 17, the vehicle charging system can include an additional relay or other electrical switch 948 coupled to the controller 844. The switch 948 can enable a user to begin charging the battery 920 of a vehicle 918 connected to the vehicle charging system only when desired. Accordingly, the controller 844 can send a signal to close the switch 948 upon receiving a command from a user (e.g., via a user-manipulatable control having any of the forms described herein) to begin charging the battery 920 of a vehicle 918 connected thereto. Like the other embodiments described and illustrated herein, the switch 948 can be controlled by a user and/or can be controlled by a power utility 948 via the transceivers 846, 852 and controllers 840, 844.

By virtue of the battery 946 in the embodiment of FIG. 17, control over a community's power draw needed for charging vehicles 918 is greatly increased. Rather than wait until a vehicle 918 is connected to the electrical system of a house, building, or other facility in order to supply power to charge the battery 920 of the vehicle 918, the user or power utility 848 can be free to supply vehicle battery charging power at any convenient time. For example, if the power utility 848 has a period of relatively low daytime demand that is unexpected (such as a drop in power draw during an otherwise peak or high demand time), the power utility 848 can begin charging the battery 946 regardless of whether the vehicle 918 is in another location. This flexibility can enable the power utility 848 to independently send relatively low-cost battery charging power—and/or for the user to independently draw relatively low-cost battery charging power—at times of power surplus regardless of the location of the vehicle 918 to be charged.

In some embodiments, the vehicle charging system of FIG. 17 can also operate in a manner similar to the embodiments of FIGS. 2, 3, and 5-16, whereby a user can connect the battery 920 of the vehicle 918 for charging, and the battery 920 can be charged in any manual or programmed mode by closure of the switches 892, 948 under control of the controller 844. Such charging can take place without draining the battery 946 described above (such as by a suitable electrical bypass around the battery 946), or can be supplemented by any amount of charge existing in the battery 946. In this regard, if the cost for charging or partially charging the battery 946 of the vehicle charging system is higher than the calculated cost of charging the battery 920 of the vehicle 918 at the desired charging start time (both figures being available to the controller 844 as described above, and being storable in and retrievable from the memory 906 as desired), the controller 844 can control the switches 892, 948 to charge the vehicle battery 920 using the charge from the system battery 946 first. If the opposite is true, the controller 844 can control the switches 892, 948 to charge the vehicle battery 920 using power directly from the power utility 848 without draining the system battery 946. These operating conditions can be continually monitored by the controller 844, which in some embodiments can automatically react to changing power supply costs while charging is in process by changing the source of charging current (i.e., system battery 946 or power utility 848).

The vehicle charging system of FIG. 17 is illustrated in the form of a portable vehicle charging cord, such as the embodiments of FIGS. 2, 5-12, and 15. However, the features of the vehicle charging system of FIG. 17 can be incorporated into any of the vehicle charging system embodiments described and/or illustrated herein, including those illustrated in FIGS. 3, 13, 14, 16, and FIGS. 4, 18, and 19 (described below).

FIGS. 4, 18, and 19 illustrate another embodiment of a vehicle charging system according to the present invention. This embodiment employs much of the same structure and has many of the same properties as the embodiments of the vehicle charging systems described above in connection with FIGS. 2, 3, and 5-17. Accordingly, the following description focuses primarily upon the structure and features that are different the embodiments described above in connection with FIGS. 2, 3, and 5-17. Reference should be made to the description above in connection with FIGS. 2, 3, and 5-17 for additional information regarding the structure and features, and possible alternatives to the structure and features of the vehicle charging system illustrated in FIGS. 4, 18, and 19 and described below. Structure and features of the embodiment shown in FIGS. 4, 18, and 19 that correspond to structure and features of the embodiments of FIGS. 2, 3, and 5-17 are designated hereinafter in the 1000 and 1100 series of reference numbers.

The vehicle charging system illustrated in FIGS. 4, 18, and 19 has the same components and features as described above in connection with the on-board vehicle charging system of FIGS. 13, 14, and 16, but is further adapted for charging the battery 1020 of the vehicle 1018 by induction charging. Accordingly, the vehicle charging system illustrated in FIGS. 4, 18, and 19 has a touch screen display 1032 having a charge time remaining indicator 1066, power used indicator 1068, charge cost per hour indicator 1070, and total cost indicator 1072 as described in greater detail in the embodiments above. Also, the illustrated display 1032 includes a vehicle charging status indicator 1042 (not shown in FIG. 19, but in the text banner at the top of the illustrated display 1032 in FIG. 19 when docking is not in process), a communication status indicator 1054, and a power connection status indicator 1056 as described in greater detail in the embodiments above.

The display 1032 illustrated in FIG. 19 can display multiple screens 1040 to be shown upon the display 1032, thereby enabling a significantly greater amount of battery and battery charging information to be shown on the display, and/or enabling a greater degree of control over the vehicle charging system. Navigation between screens 1040 on the display 1032 is enabled by navigation buttons on the screens 1040. For example, the screen 1040 shown in FIG. 19 includes two navigation buttons 1078, 1080 for navigation to programming and utility screens as described in greater

detail in the embodiments above. Also, the screen **1040** has separate buttons **1034**A, **1034**B to start or stop a charging session.

Although the in-console display **1032** illustrated in FIG. **19** is a touch screen display **1032**, the display **1032** can be any other type of display, such as the other types of displays described and illustrated herein. For example, the touch screen display **1032** can be replaced by a display such as that shown in FIGS. **5-11** or FIG. **12**, in which cases the vehicle charging system can include navigation buttons (e.g., adjacent the display **1032**) enabling a user to navigate through a screen and to select any selectors upon the display **1032**. As another example, the touch screen display **1032** can be replaced by any combination of buttons, switches, dials, or other user-manipulatable controls; LEDs and other lights; and displays (e.g., see FIG. **12**).

With reference now to FIG. **4**, the vehicle charging system of FIGS. **4**, **18**, and **19** utilizes a conventional battery induction charging system in order to charge the battery **1020** of the vehicle **1018**, and includes a charging pad **1150** having a power supply core (not shown) energized to supply power via induction to a power receiving core of the vehicle (shown schematically at **1152** in FIG. **18**). By way of example only, an inductive vehicular battery charger system that can be used is disclosed in U.S. Pat. No. 6,525,510, the entire contents of which are incorporated herein by reference. The power supply core of the charging pad **1150** is electrically connected to and receives power from a vehicular charger that is the same as that described above in connection with the embodiment of FIG. **3**. In particular, the core of the charging pad **1150** is electrically connected to the electrical system of the house, building, or other facility at which charging is to take place via a below-ground or above-ground power line **1144** extending to a cabinet **1142** having any of the selectors and indicators (including display (s)) described above in connection with FIG. **3**. In this regard, any of the alternative vehicle charger features and structures also described above in connection with the embodiment of FIG. **3** can also be applied in the inductive vehicular charging system of FIGS. **4**, **18**, and **19**.

As is well known to those in the art of inductive battery charging, proper alignment between the power supply core and the power receiving core of the battery charger is important for efficient battery charging. In the illustrated embodiment of FIGS. **4**, **18**, and **19**, this alignment can be achieved by user operation of the vehicle **1018**. In particular, one or more sensors **1154** can be provided on the vehicle **1018** and can be positioned to detect the presence and proximity of the vehicle charging pad **1150** and core thereof. The sensors **1154** can be inductive sensors adapted to detect the presence of metallic elements **1156** in the vehicle charging pad **1150** or having known positions with respect to the vehicle charging pad **1150** and core. Alternatively, the sensors **1154** can be Hall Effect sensors adapted to detect the magnetic field of magnets or electromagnets having known positions on or with respect to the vehicle charging pad **1150** and core. In other embodiments, the sensors **1154** can be RFID sensors adapted to detect the position of one or more RFID transmitters having known positions on or with respect to the vehicle charging pad **1150** and core. Still other types of sensors **1154** can instead be used, including without limitation optical sensors, eddy current sensors, and ultrasonic sensors for use in conjunction with optical, eddy current, and ultrasonic sensing and position systems, all of which operate on principles well-known to those skilled in the art. By detecting the distance between the sensor(s) **1154** on the vehicle **1018** and one or more reference points on the charging pad **1150** (or having known positions with respect to the charging pad **1150**), the position of the sensor(s) **1154** with respect to the charging pad **1150** can be identified via triangulation. Triangulation systems operating to detect the relative position of objects based upon any of these technologies are well-known to those skilled in the art, and are not therefore described further herein.

In other embodiments, the locations of the sensors **1154** and the elements **1156** (e.g., metallic elements **1156**, magnets or electromagnets, RFID transmitters, and the like, as described above) detected by the sensors **1154** can be reversed, whereby one or more of the sensors **1154** can be located on the charging pad **1150** or located at known positions with respect to the charging pad **1150** for detecting one or more elements **1156** (e.g., metallic elements **1156**, magnets or electromagnets, RFID transmitters, and the like, as described above) of the vehicle **1018**.

The controller (not shown) of the inductive vehicle charging system illustrated in FIGS. **4**, **18**, and **19** receives signals from the sensor(s) **1154** described above, and based upon a conventional triangulation algorithm as described above, determines the direction in which the vehicle **1018** must move for desired alignment of the vehicle **1018** (and power receiving core connected to the battery **1020** of the vehicle **1018**) with respect to the charging pad **1150** and core thereof. Upon making this determination, the controller can display directional instructions to the user. In the illustrated embodiment of FIGS. **4**, **18**, and **19**, directional indicators **1160** are displayed on the same touch screen display **1032** described above, along with a text line **1162** noting the direction the vehicle **1018** should move for proper charging alignment. In other embodiments, this information can be provided on another display (e.g., on a display located in a console of the vehicle **1018**), or can be located on another type of display (not necessarily a touch screen). Also, in some embodiments, this information can be presented without a display **1032**, such as by illumination of one or more LEDs or other lights to illuminate an arrow or other symbol, text, or any combination of symbols and text providing directional instructions to the user.

By way of example only, the touch screen display **1032** illustrated in FIG. **19** presents text **1162** indicating the direction in which the user should move the vehicle **1018** for proper charging alignment, presents arrow symbols **1160** in any combination (e.g., forward, rearward, left, right) around a graphical depiction of the vehicle **1164**, and also displays a graphical depiction of the front wheels **1166** turned in the direction needed for proper charging alignment. Any combination of these and other alignment symbols and text instructions **1168** can be displayed to the user to indicate how the vehicle **1018** should be moved for proper charging alignment. Such symbols and/or text **1168** can be updated continuously or periodically as the position of the sensors **1154** and vehicle **1018** change with respect to the charging pad **1150** and core thereof, until alignment within a predetermined acceptable error calculated by the controller is achieved. In some embodiments, the control(s) selected to begin a charging session (e.g., the "START CHARGE" selector **1034**A on the touch screen display **1032** of the illustrated embodiment) are disabled until such alignment is achieved.

By utilizing the sensors **1154**, sensed elements **1156**, and alignment indicators **1168** as just described, proper alignment of the vehicle **1018** with respect to the charging pad **1150** can be conveniently and quickly achieved without

requiring the user to leave the vehicle **1018**. Also, a charging session can be started without the need to plug in the vehicle **1018**.

Although the induction-based vehicle charging system described above in connection with FIGS. **4**, **18**, and **19** is presented in the context of an on-board vehicle charging system (i.e., where the display **1032**, and other indicators and selectors are located in one or more consoles of the vehicle **1032**, it should be noted that the vehicle alignment features described above can be used in connection with any of the other vehicle charging systems herein.

Another feature of the present invention regards the location at which a cord-based vehicle charging system is attached to the vehicle. As described above, some vehicle charging systems according to the present invention utilize a cord **22**, **222**, **540**, **744**, **944** that is releasably or permanently attached to the vehicle **18**, **218**, **418**, **618**, **818**. It will be appreciated that such a tethered connection can present the danger of a user accidentally moving the vehicle **18**, **218**, **418**, **618**, **818** before disconnecting the cord **22**, **222**, **540**, **744**, **944** from the vehicle **18**, **218**, **418**, **618**, **818**. Depending upon the position and orientation of the electrical connector of the vehicle **18**, **218**, **418**, **618**, **818** to which the cord **22**, **222**, **540**, **744**, **944** is connected, and the manner in which the opposite end of the cord **22**, **222**, **540**, **744**, **944** is attached to the electrical system of the house, building, or other facility, such movement can create significant damage to the vehicle **18**, **218**, **418**, **618**, **818**, cord **22**, **222**, **540**, **744**, **944**, and/or the electrical system of the house, building, or other facility. In some embodiments of the present invention, this damage can be mitigated or avoided by virtue of the position of the electrical connector of the vehicle **18**, **218**, **418**, **618**, **818**.

With reference now to FIGS. **20-23**, another embodiment of the present invention is illustrated, and is presented in the context of the vehicle charging cords **22**, **122** in the embodiments of FIGS. **2**, **5-12**, and **15** by way of example only. In this regard, the features described below in connection with FIGS. **20-23** can be utilized in conjunction with any of the vehicle charging systems disclosed herein in which a power cord **22**, **222**, **540**, **744**, **944** is attached to a vehicle **18**, **218**, **418**, **618**, **818** for purposes of charging the battery **20**, **222**, **422**, **622**, **822** of the vehicle **18**, **218**, **418**, **618**, **818**.

As shown in FIGS. **20-22**, the plug **26** of the vehicle charging cord **22**, **222** releasably connects to the electrical connector **170** of the vehicle **18**, **218**. In the illustrated embodiment of FIGS. **20-22**, the electrical connector **170** of the vehicle is located in a front surface **172** of the vehicle **18**, **218**. Accordingly, in the event a user moves the vehicle **18**, **218** in a rearward direction without disconnecting the vehicle charging cord **22**, **222**, the opportunity for the plug **26** of the vehicle charging cord **22**, **222** to automatically disconnect by virtue of rearward movement of the vehicle **18**, **218** is significantly increased. Of course, a significant factor in the amount of shear and tension force exerted upon the plug **26**, vehicle charging cord **22**, **222**, and electrical connector **170** prior to this disconnection is the location of the other end of the vehicle charging cord **22**, **222**. In those embodiments where the other end (e.g., plug **24**) of the vehicle charging cord **22**, **222** is connected to the electrical system of a house, building, or other facility substantially in front of the vehicle **18**, **218**, this force can be significantly less than the disconnection force needed in those embodiments in which the other end of the vehicle charging cord **22** is connected at a location laterally disposed from the vehicle **18**, **218**. However, for those applications in which the vehicle **18**, **218** must be backed up to exit the vehicle charging area, this location of the electrical connector **170** can significantly reduce the amount of disconnection force compared to locations of the electrical connector **170** located on a side or rear of the vehicle **18**, **210**.

Although not illustrated, in some embodiments, the electrical connector **170** of the vehicle **18**, **218** is located in a rear surface **174** of the vehicle **18**, **218**. Accordingly, in the event a user moves the vehicle **18**, **218** in a forward direction without disconnecting the vehicle charging cord **22**, **222**, the opportunity for the plug **26** of the vehicle charging cord **22**, **222** to automatically disconnect by virtue of forward movement of the vehicle **18**, **218** is significantly increased. As described above, a significant factor in the amount of shear and tension force exerted upon the plug **26**, vehicle charging cord **22**, **222**, and electrical connector **170** prior to this disconnection is the location of the other end of the vehicle charging cord **22**, **222**. In those embodiments where the other end (e.g., plug **24**) of the vehicle charging cord **22**, **222** is connected to the electrical system of a house, building, or other facility substantially behind the vehicle **18**, **218**, this force can be significantly less than the disconnection force needed in those embodiments in which the other end of the vehicle charging cord **22** is connected at a location laterally disposed from the vehicle **18**, **218**. However, for those applications in which the vehicle **18**, **218** must be moved forward to exit the vehicle charging area, this location of the electrical connector **170** can significantly reduce the amount of disconnection force compared to locations of the electrical connector **170** located on a side or front of the vehicle **18**, **218**.

In some embodiments, a clearance or light interference fit is provided between the plug **24** of the vehicle charging cord **22**, **222** and the electrical connector **170** (located in a front or rear surface **172**, **174** of the vehicle **18**, **218** as described above), thereby providing a reduced amount of force needed to disconnect the plug **24** from the electrical connector **170**. In some embodiments, a force needed for disconnection of the plug **24** from the electrical connector **170** is no greater than about 20 pounds (measured in a direction parallel to motion of the plug **24** with respect to the electrical connector **170** during connection) to avoid or reduce damage to the vehicle charging cord **22**, **222**, electrical connector **170**, and vehicle **18**, **218**. In other embodiments, this force is no greater than about 10 pounds to avoid or reduce damage to the vehicle charging cord **22**, **222**, electrical connector **170**, and vehicle **18**, **218**. In still other embodiments, this force is no greater than about 5 pounds to avoid or reduce damage to the vehicle charging cord **22**, **222**, electrical connector **170**, and vehicle **18**, **218**.

As indicated above, the angle at which the force of disconnection is applied upon the electrical connector **170** and plug **24** can have a significant impact upon the shear and tension forces experienced by the electrical connector **170** and plug **24** when the vehicle **18**, **218** is moved without unplugging the vehicle charging cord **22**, **222**. To reduce or mitigate these forces, the orientation of the electrical connector **170** with respect to the vehicle **18**, **218** is selected to fall within a range of angles measured from a forward direction of the vehicle **18**, **218**. In particular, in some embodiments, the electrical connector **170** is oriented so that an angle **176** (see FIG. **21**) between the forward direction of the vehicle **18**, **218** (defined by proper alignment of the vehicle under normal operating conditions) and the direction of motion of the plug **24** with respect to the electrical connector **170** during connection is no greater than about 50 degrees. In other embodiments, this angle **176** is no greater than about 40 degrees to reduce or mitigate the disconnec-

tion force. In still other embodiments, this angle **176** is no greater than about 30 degrees to reduce or mitigate the disconnection force. In combination with the maximum disconnection forces according to some embodiments as described above, these orientation angles **176** of the electrical connector **170** can help to ensure damage-free disconnection of the vehicle charging cord **22**, **222** from the electrical connector **170** of the vehicle **18**, **218** regardless of whether the electrical connector **170** is located in the front or rear surface **172**, **174** of the vehicle **18**, **218** as described above.

In some embodiments, the vehicle **18**, **218** is provided with two or more electrical connectors **170** in different locations (e.g., different sides) on the exterior of the vehicle **18**, **218**, any of which can be connected to a vehicle charging cord **22**, **222** to charge the battery **20**, **220** of the vehicle **18**, **218**. For example, one electrical connector **170** can be located in a front surface **172** of the vehicle **18**, **218**, and another electrical connector **170** can be located in a rear surface **172** of the vehicle **18**, **218**. Both such electrical connectors **170** can be connected to the battery **20**, **220** and controller **44**, **244** of the vehicle **18**, **218** by suitable power wiring (e.g., wiring harnesses) extending along the vehicle **18**, **218**. In such embodiments, a user can choose to connect the vehicle charging cord **22**, **222** to the electrical connector **170** closest to the location at which the vehicle charging cord **22**, **222** is connected to the electrical system of the house, building, or other charging facility, or can connect the vehicle charging cord **22**, **222** to the electrical connector **170** oriented at the smallest angle with respect to such a location upon accidental movement of the vehicle **18**, **218**. This ability to choose between two or more electrical charging connectors **170** can present significant convenience to the user while helping to prevent damage to the vehicle charging cord **22**, **222** and vehicle **18**, **118** upon accidental movement of the vehicle **18**, **118** while still plugged in.

The illustrated embodiment of FIGS. **20-23** is presented with reference to a vehicle charging cord **22**, **222** intended for releasable connection at an electrical connector **170** of the vehicle **18**, **218**. However, it should be noted that the same principles of disconnect force, disconnect angle, and cord-to-vehicle interface location apply regardless of whether the vehicle charging cord **22**, **222** is intended to be disconnected at the vehicle **18**, **218**. In this regard, some embodiments of the present invention provide a vehicle charging cord **22**, **222** that is not intended for disconnection from the vehicle **18**, **218** (as presented above in connection with earlier-described embodiments). However, in such embodiments, the vehicle charging cord **22**, **222** and/or the electrical wiring of the vehicle **18**, **218** can be provided with an electrical connector that can automatically disconnect upon experiencing a threshold force. Any electrical connector located in the wiring of the vehicle **18**, **218** or in the cord extending therefrom to a source of electrical power can be used. For example, in embodiments in which a power cord extending from the vehicle **18**, **218** can be retracted onto a reel located on the vehicle **18**, **218** as described above, the power cord can have a releasable electrical connection at a point along the length of the cord. As another example, the power cord can be provided with a releasable electrical connector located at the housing **28**, **228** or cabinet **742**, **1142** of the vehicle charging system. In any such case, the power cord can automatically disconnect upon experiencing a threshold force such as those described above, thereby preventing damage (or further damage) to the vehicle **18**, **218** or the electrical system of the house, building, or other charging facility. Such disconnection can be frangible, meaning that the cord and/or connector is at least partially destroyed upon disconnection, or can be re-connectable by a user or service technician.

In some embodiments, the electrical connector **170** is located in a surface of the vehicle **18**, **218** that is recessed with respect to adjacent (e.g., surrounding) exterior body surfaces of the vehicle **18**, **218**. This feature can help to reduce exposure of the electrical connector **170** to the environment around the vehicle **18**, **218**. In these and other embodiments, the electrical connector **170** is located behind a door **178** that can either slide or pivot with respect to the electrical connector **170** in order to reveal the electrical connector **170** for connection and charging. The door **178** can also help to reduce exposure of the electrical connector **170** to the environment around the vehicle **18**, **218**. In some embodiments, the door **178** can be opened manually by a user pushing, pulling, and/or rotating the door **178**. However, in other embodiments, the door **178** can be at least partially opened remotely by a cable, solenoid and associated power wiring, mechanical linkage, and other elements connected to a user-manipulatable control in the vehicle **18**, **218**. Any mechanism used to open a fuel door for a gasoline or diesel-powered vehicle can be used for this purpose, and falls within the spirit and scope of the present invention.

As described in greater detail above, the controller **44**, **244** of the vehicle charging cords **22**, **222** can communicate with a controller **108** of the vehicle **18**, **218**, such as by PLC-based communication. As an alternative or in addition to such communication, the vehicle charging cord **22**, **222** (and all other vehicle charging cords described and/or illustrated herein) can enable such communication by dedicated wiring in the same cord **22**, **222**. An example of such a cord **22**, **222** is illustrated in FIGS. **20-23**, and with particular reference to FIG. **23**. In this embodiment, the plug **26** of the vehicle charging cord **26** has two communication pins **180** in addition to power and ground blades **182**. The communication pins **180** are electrically coupled to wires or other electrical lines extend along the cord **22**, **222**, and can extend into and establish electrical communication with sockets **184** of the electrical connector **170**. By this connection, communication along the cord **22**, **222** on one or more electrical lines separate from power and ground lines of the cord **22**, **222** can be established. It will be appreciated that such communication lines can be appropriately shielded for better performance, in some embodiments. Also, any number of such communication lines and associated pins **180** can be provided on the cord **22**, **222**. Furthermore, although pins **180** are illustrated in the embodiment of FIGS. **20-23**, any other type of electrical connector (e.g., sockets adapted for connection to pins on the electrical connector **170**) can instead be used. Such communication lines can also be used on the opposite end of the cord **22**, **222** for communication between the controller **44**, **244** and a controller **50**, **250** of a power utility **48**, **248**, and can be used in any of the cord-based vehicle charging system embodiments disclosed herein.

Operation of a vehicle charging system according to an embodiment of the present invention to perform a manual charging session will now be described with reference to FIG. **24**. By way of example only, operation will be described in connection with the illustrated embodiment of FIGS. **2**, **5-11**, and **15**, it being understood that any portion or all of the operation described in connection with FIG. **24** can be applied in any of the other vehicle charging system embodiments described and/or illustrated herein. With continued reference to FIG. **24**, power is first established **11** to the vehicle charging cord **22**, such as (in some embodi-

ments) by plugging the vehicle charging cord **22** into an electrical outlet of the house, building or other facility at which charging is to take place, or by pressing the power button **34** in these and other embodiments. Upon receiving power, the controller **44** can retrieve any charge settings **13** previously entered and saved into memory **106**, and can display such settings when the appropriate screen(s) **40** are shown upon the display **32**. Next, the controller **44** can receive charge time and other settings **15** entered by a user via the display **32** and associated navigation buttons **36**, **38**, and in some embodiments can store such settings in memory **106** (at **17**).

Following a command to start a manual battery charging session (at **19**) based upon a start time selected by a user (such as by the user selecting selector **86** in the second screen **40**A shown in FIG. **10** and entering a charge start time in selector **90**), the controller **44** can continue to compare the time of the clock **58** with the charge start time entered by the user (at **21**) until the start time is reached by the clock **58**. Until the start time is reached, the controller continues to delay **23** charging of the battery **20** connected thereto. Once the start time is reached, the controller **44** closes the electrical switch **92** at **25**, and begins charging the battery **20**. Next, using the battery diagnostic circuitry described above, the controller **44** determines the charge level of the battery **20** at **27**. If a determination is made that the battery **20** is not fully charged at **29**, the controller **44** continues to keep the electrical switch **92** closed, thereby continuing to charge the battery **20** at **31**. Otherwise, the controller **44** ends the charging session by opening the electrical switch **92** at **33**.

Operation of a vehicle charging system according to another embodiment of the present invention to perform a programmed charging session will now be described with reference to FIG. **25**. In this embodiment, additional features are provided compared to the charging session described above in connection with FIG. **24**. By way of example only, operation will be described in connection with the illustrated embodiment of FIGS. **2**, **5-11**, and **15**, it being understood that any portion or all of the operation described in connection with FIG. **25** can be applied in any of the other vehicle charging system embodiments described and/or illustrated herein. With continued reference to FIG. **25**, power is first established **11** to the vehicle charging cord **22**, such as (in some embodiments) by plugging the vehicle charging cord **22** into an electrical outlet of the house, building or other facility at which charging is to take place, or by pressing the power button **34** in these and other embodiments. Upon receiving power, the controller **44** can retrieve any charge settings **13** previously entered and saved into memory **106**, and can display such settings when the appropriate screen(s) **40** are shown upon the display **32**.

Next, at **35**, the controller **44** can employ the battery diagnostic circuitry described above to detect one or more properties of the battery **20** connected to the vehicle charging cord **22**, such as the charge level of the battery **20**, the voltage of the battery **20**, the condition of the battery **20** (e.g., whether the battery **20** is faulty), and the like, and can display (at **37**) any or all of this information to the user in any of the manners described above in connection with the embodiment of FIGS. **2**, **5-11**, and **15**. The controller **44** can also establish communication with the controller **108** of the vehicle **18** at **39**, and can retrieve information regarding the battery **20** (e.g., battery make, model, age, and the like) at **41** via the controller **108** of the vehicle **18** or directly from a memory of the vehicle **18**.

At step **43**, the controller **44** can receive charge time and other settings entered by a user via the display **32** and associated navigation buttons **36**, **38**, and in some embodiments can store such settings in memory **106** (at **45**). The controller **44** can also display the charge time remaining **66** at **47**. Following a command to start a programmed battery charging session (at **49**) based upon a start time selected by a user (such as by the user selecting selector **86** in the second screen **40**A shown in FIG. **10** and entering a charge start time in selector **90**), the controller **44** can continue to compare the time of the clock **58** with the charge start time entered by the user (at **51**) until the start time is reached by the clock **58**. Until the start time is reached, the controller continues to delay **53** charging of the battery **20** connected thereto. Once the start time is reached, the controller **44** closes the electrical switch **92** at **55** to begin charging the battery **20**.

Next, at **57**, the controller **44** compares the time of the clock **58** with an end time setting that can be entered into the vehicle charging cord **22** according to some alternative embodiments of the present invention. If the end time has been reached, the controller **44** ends the charging session by opening the electrical switch **92** at **65**. Otherwise, if the end time setting has not yet been reached, battery charging continues, and using the battery diagnostic circuitry described above, the controller **44** determines the charge level of the battery **20** at **59**. If a determination is made that the battery **20** is not fully charged at **61**, the controller **44** continues to keep the electrical switch **92** closed, thereby continuing to charge the battery **20** at **63**. Otherwise, the controller **44** ends the charging session by opening the electrical switch **92** at **65**.

Operation of a vehicle charging system according to another embodiment of the present invention to perform a programmed charging session will now be described with reference to FIG. **26**. By way of example only, operation will be described in connection with the illustrated embodiment of FIGS. **2**, **5-11**, and **15**, it being understood that any portion or all of the operation described in connection with FIG. **26** can be applied in any of the other vehicle charging system embodiments described and/or illustrated herein. With continued reference to FIG. **26**, power is first established **11** to the vehicle charging cord **22**, such as (in some embodiments) by plugging the vehicle charging cord **22** into an electrical outlet of the house, building or other facility at which charging is to take place, or by pressing the power button **34** in these and other embodiments. Upon receiving power, the controller **44** can retrieve any charge settings **13** previously entered and saved into memory **106**, and can display such settings when the appropriate screen(s) **40** are shown upon the display **32**.

Next, at **35**, the controller **44** can employ the battery diagnostic circuitry described above to detect one or more properties of the battery **20** connected to the vehicle charging cord **22**, such as the charge level of the battery **20**, the voltage of the battery **20**, the condition of the battery **20** (e.g., whether the battery **20** is faulty), and the like, and can display (at **37**) any or all of this information to the user in any of the manners described above in connection with the embodiment of FIGS. **2**, **5-11**, and **15**. The controller **44** can also establish communication with the controller **108** of the vehicle **18** at **39**, and can retrieve information regarding the battery **20** (e.g., battery make, model, age, and the like) at **41** via the controller **108** of the vehicle **18** or directly from a memory of the vehicle **18**.

At step **43**, the controller **44** can receive charge time and other settings entered by a user via the display **32** and associated navigation buttons **36**, **38**, and in some embodiments can store such settings in memory **106** (at **45**). Following a command to start a programmed battery charg-

ing session (at **49**) based upon a battery charging end time selected by a user (such as by the user selecting selector **100** in the second screen **40**A shown in FIG. **10** and entering a charge end time in selector **104**), the controller **44** can establish communication with the power utility **48** at **67**, and can transmit (or enable the power utility **48** to retrieve) the charge time settings, any other settings, and the battery property information to the power utility **48** at **69**.

Next, the controller **44** of the vehicle charging cord **22** or the controller **50** of the power utility **48** can calculate the power required to fully charge the battery **20** based at least in part upon the level of charge of the battery **20** at **71**. The controller **44** of the vehicle charging cord **22** or the controller **50** of the power utility **48** can then calculate the amount of time needed to fully charge the battery **20** based upon the power required to do so, and can thereby estimate the time of day at which charging can begin based at least in part upon the battery charging end time and the estimated duration of time necessary to fully charge the battery **20** (at **73**).

At step **75**, the controller **44** can continue to compare the time of the clock **58** with the charge start determined as described above until the start time is reached by the clock **58**. Until the start time is reached, the controller continues to delay **77** charging of the battery **20** connected thereto. Once the start time is reached, the controller **44** closes the electrical switch **92** at **79** to begin charging the battery **20**.

Next, at **81**, the controller **44** compares the time of the clock **58** with an end time setting that can be entered into the vehicle charging cord **22** according to some alternative embodiments of the present invention. If the end time has been reached, the controller **44** ends the charging session by opening the electrical switch **92** at **83**. Otherwise, if the end time setting has not yet been reached, battery charging continues, and using the battery diagnostic circuitry described above, the controller **44** determines the charge level of the battery **20** at **85**. If a determination is made that the battery **20** is not fully charged at **87**, the controller **44** continues to keep the electrical switch **92** closed, thereby continuing to charge the battery **20** at **89**. Otherwise, the controller **44** ends the charging session by opening the electrical switch **92** at **83**.

Operation of a vehicle charging system according to another embodiment of the present invention to perform a programmed charging session will now be described with reference to FIG. **27**. By way of example only, operation will be described in connection with the illustrated embodiment of FIGS. **2**, **5-11**, and **15**, it being understood that any portion or all of the operation described in connection with FIG. **27** can be applied in any of the other vehicle charging system embodiments described and/or illustrated herein. With continued reference to FIG. **27**, power is first established **11** to the vehicle charging cord **22**, such as (in some embodiments) by plugging the vehicle charging cord **22** into an electrical outlet of the house, building or other facility at which charging is to take place, or by pressing the power button **34** in these and other embodiments. Upon receiving power, the controller **44** can retrieve any charge settings **13** previously entered and saved into memory **106**, and can display such settings when the appropriate screen(s) **40** are shown upon the display **32**.

Next, at **35**, the controller **44** can employ the battery diagnostic circuitry described above to detect one or more properties of the battery **20** connected to the vehicle charging cord **22**, such as the charge level of the battery **20**, the voltage of the battery **20**, the condition of the battery **20** (e.g., whether the battery **20** is faulty), and the like, and can display (at **37**) any or all of this information to the user in any of the manners described above in connection with the embodiment of FIGS. **2**, **5-11**, and **15**. With this information, the controller **44** can determine whether the battery **20** is defective or otherwise has a fault at **91**, and can communicate a battery fault message to the user in any of the manners also described above in connection with the embodiment of FIGS. **2**, **5-11**, and **15** if a fault exists (at **93**). The controller **44** can also establish communication with the controller **108** of the vehicle **18** at **95**, and can retrieve information regarding the battery **20** (e.g., battery make, model, age, and the like) at **97** via the controller **108** of the vehicle **18** or directly from a memory of the vehicle **18**.

At step **99**, the controller **44** can receive charge time and other settings entered by a user via the display **32** and associated navigation buttons **36**, **38**, and in some embodiments can store such settings in memory **106** (at **101**). Following a command to start a programmed battery charging session (at **103**) based upon a battery charging end time selected by a user (such as by the user selecting selector **100** in the second screen **40**A shown in FIG. **10** and entering a charge end time in selector **104**), the controller **44** can establish communication with the power utility **48** at **105**, and can transmit (or enable the power utility **48** to retrieve) the charge time settings, any other settings, and the battery property information to the power utility **48** at **107**.

Next, the controller **44** of the vehicle charging cord **22** or the controller **50** of the power utility **48** can calculate the power required to fully charge the battery **20** based at least in part upon the level of charge of the battery **20** at **109**. The controller **44** of the vehicle charging cord **22** or the controller **50** of the power utility **48** can then calculate the amount of time needed to fully charge the battery **20** based upon the power required to do so, and can thereby estimate the latest time of day at which charging can begin based at least in part upon the battery charging end time and the estimated duration of time necessary to fully charge the battery **20** (at **111**). Also, at **113**, the controller **44** of the vehicle charging cord **22** or the controller **50** of the power utility **48** can set an acceptable threshold cost of power (e.g., per unit time) at or below which battery charging will begin. In some embodiments, this threshold cost of power is entered by a user into the vehicle charging cord **22** in any of the manners of user interface described herein, or can be set by the power utility **48** based upon the desired maximum power cost determined by the power utility **48**.

At step **115**, the controller **44** can compare the time of the clock **58** with the latest estimated charge time, and at step **117** can compare the current cost of power (e.g., per unit time) with the threshold cost of power determined at step **113**. If the latest estimated charge start time has been reached or if the threshold cost of power has been reached, the controller **44** closes the electrical switch **92** at **119** to begin charging the battery **20**. Otherwise, the controller **44** continues to delay **121** charging of the battery **20** connected thereto.

Next, at **123**, the controller **44** can check or otherwise determine whether communication has been lost with the controller **50** of the power utility **48**. If communication has been lost, the controller **44** can send a communication fault message to the user in any of the manners described above in connection with the embodiment of FIGS. **2**, **5-11**, and **15** (at **125**). Otherwise, the controller **44** can check or otherwise determine whether the supply of power to the vehicle charging cord **22** has been interrupted at **127**. If the supply of power has been interrupted, the controller **44** can send a power interrupt fault message to the user in any of the

manners also described above in connection with the embodiment of FIGS. **2**, **5-11**, and **15** (at **129**).

On a continuing basis as the battery **20** is being charged, the controller **44** of the vehicle charging cord **22** or the controller **50** of the power utility **48** can monitor the cost of power supplied to the battery **20**, and can compare this cost with the threshold cost of power described above (at **131**). If the cost of power supplied to the battery **20** exceeds the threshold cost of power, the controller **44** of the vehicle charging cord **22** or the controller **50** of the power utility **48** can interrupt charging of the battery at **133**, such as by opening the electrical switch **92** of the vehicle charging cord **92**. Otherwise, using the battery diagnostic circuitry described above, the controller **44** determines the charge level of the battery **20** at **135**. If a determination is made that the battery **20** is not fully charged at **137**, the controller **44** continues to keep the electrical switch **92** closed, thereby continuing to charge the battery **20** at **139**. Otherwise, the controller **44** ends the charging session by opening the electrical switch **92** at **141**.

Four examples of vehicle charging operation according to embodiments of the present invention are described above in connection with FIGS. **24-27**. It should be noted any sub-combination of the steps described in connection with FIGS. **24-27** can be performed in other embodiments. Also, although the steps of the various processes presented above are described as occurring in a particular order, a number of the steps of each process can occur in different orders without departing from the spirit and scope of the present invention. Furthermore, steps and combinations of steps described in combination with one or more of the embodiments of FIGS. **24-27** can be employed in the processes of the other embodiments of FIGS. **24-27**. For example, the battery fault check and notification steps **91**, **93**, the communication fault and notification steps **123**, **125**, and/or the power interruption fault check and notification steps **127**, **129** in the process illustrated in FIG. **27** can be utilized in any of the other embodiments disclosed herein, including those of FIGS. **24-26**.

Also, in the various processes described and illustrated herein, the controller **44** is described as performing a number of functions. Based upon the ability of those vehicle charging systems herein to communicate with a processor of a power utility, any of these functions can instead or also be performed by the processor of the power utility communicating and controlling the vehicle charging cords **22** or systems.

As described above, the use of any of the vehicle charging systems described and/or illustrated herein can provide significant control to a user in determining the conditions under which vehicle battery charging will occur. This control can result in cost savings to the user without impacting the user's daily routine. However, other benefits accrue to power utilities providing power to users of these vehicle charging systems. By at least partially controlling the time at which battery charging will occur and/or by having the ability to interrupt and re-start battery charging by a large number of users in a community, the power utility can better distribute power usage over a period of time, thereby providing significant cost savings to the power utility.

An example of how a power utility can control multiple vehicle charging systems according to the present invention is illustrated in FIGS. **28** and **29**. By way of example only, operation will be described in connection with users employing vehicle charging cords **22**, **222** such as those illustrated in FIGS. **2**, **5-11**, and **15**, it being understood that any portion or all of the operation described in connection with FIGS. **28** and **29** can be applied in any of the other vehicle charging system embodiments described and/or illustrated herein.

With reference first to FIG. **28**, the controller **50** of the power utility **48** (which can be defined by one or more servers and associated computer equipment) can communicate with the vehicle charging cords **22**, **222** of multiple users, and can continuously or periodically update a queue or other list of on-line users who have requested a battery charge session as described above (at **143**).

In some embodiments, the controller **50** sorts the on-line users based upon one or more factors, such as the charge time end setting (i.e., earlier charge time end settings having priority), the estimated charge time needed for fully charging each battery **20** (i.e., longer charge times having priority), the time at which the battery charge session was requested, and the like. By way of example only, the controller **50** in the process of FIG. **28** checks at **145** whether any of the batteries **20** that are on-line have a very low charge, such as a charge below a minimum level set by the user at selector **112** on the second screen **40**B shown in FIG. **10**, or a charge below a minimum level set by the power utility **48**. As another example, the controller **50** in the process of FIG. **28** checks at **149** whether the estimated time to fully charge any battery **20** is equal to or greater than the time available for battery charging (i.e., to the battery charge completion time entered by the user at selector **100** on the second screen **40**B shown in FIG. **10**). If the controller **50** determines that a battery **20** has a very low charge or will require a charging duration equal to or greater than the charging time available, the controller **50** can flag or otherwise indicate that the vehicle charging cord **22**, **222** has priority over other vehicle charging cords **22**, **222** (at **147** and **151**, respectively).

The controller **50** can also remove a priority designation from any on-line vehicle charging cord **22**, **222** no longer meeting this criteria (at **153**), such as on-line charging cords **22**, **222** that have been supplied with power based upon the fact that their respective batteries **20** had a very low charge, but that now have supplied their batteries **20** with a sufficient minimum threshold charge. At step **155**, the queue of on-line vehicle charging cords **22**, **222** can be re-ordered based upon the determination of which vehicle charging cords **22**, **222** are flagged as having priority (described above), and upon any of the other factors also described above.

Next, the controller **50** at **157** can determine whether the total power draw from the community or the total power draw of all vehicle charging cords **22**, **222** exceeds a threshold maximum level of power draw. This maximum level of power draw can be set by a power utility **48** based upon a threshold level of power cost to the power utility **48**, the maximum output of power that can be supplied by the power utility **48** to the community, an amount of power budgeted by the power utility **48** for charging vehicle batteries via the vehicle charging cords **22**, **222**, other factors, and any combination thereof. If the total power draw does not exceed the maximum level of power draw set by the power utility **48**, and if the queue of vehicle charging cords **22**, **222** awaiting charging is empty (at **159**), the controller **50** can re-initiate the vehicle charging cord management process by again updating the vehicle charging cord queue at **143**. Otherwise, the controller **50** of the power utility **48** can send signals at **161** to one or more vehicle charging cords **22**, **222** to begin charging their respective batteries **20** by closing their electrical switches **92**. Such signals can be sent to any vehicle charging cords **22**, **222** flagged with priority, and then to any other vehicle charging cords **22**,

222. In either case, such signals are sent to vehicle charging cords **22**, **222** in the order presented in the vehicle charging queue (ordered as described above). Following this step, the controller **50** can re-initiate the vehicle charging cord management process by again updating the vehicle charging cord queue at **143**.

If the total power draw described above exceeds the maximum level of power draw set by the power utility **48** as determined by the processor at step **157**, and if any vehicle charging cords **22**, **222** are not flagged as having priority (check by the processor **50** made at step **163**) as described above, the controller **50** can send signals to one or more vehicle charging cords **22**, **222** not flagged as having priority to at least temporarily stop charging the batteries **20** connected thereto (e.g., by opening the electrical switches **92** of such vehicle charging cords **22**, **222**) at step **165**. In some embodiments, such signals can be sent by the power utility in batches, such as signals sent to two or more of such vehicle charging cords **22**, **222** at a given time or under a common command. Following this step, the controller **50** can re-initiate the vehicle charging cord management process by again updating the vehicle charging cord queue at **143**. Otherwise, if the processor **50** determines that all vehicle charging cords **22**, **222** are flagged as having priority at **163**, the controller **50** can re-initiate the vehicle charging cord management process by again updating the vehicle charging cord queue at **143**.

In light of the fact that the vehicle charging cord management process illustrated in FIG. **28** can be performed on a continual basis, it will be appreciated that the steps described above in connection with FIG. **28** can be carried out in a number of different orders without departing from the spirit and scope of the present invention.

With reference now to FIG. **29**, an example application of the vehicle charging cord management process of FIG. **28** is provided. FIG. **29** illustrates the total power draw (in kW) of a community upon a power utility **48** over a 24-hour period of time. As shown in FIG. **29**, the maximum preferred power draw of the power utility **48** described above in connection with FIG. **28** is 200 kW. As also shown in FIG. **29**, the power draw of the community varies significantly over the 24-hour period, peaking around 3 pm and falling to a lowest level between 2 am and 3 am. Any number of factors can define this power draw over the 24-hour period, including without limitation the number of users using air conditioning or electrical heating units during the day and the times at which such units are operated by the users, the times at which any large manufacturing operations begin and end operations, and the like. For example, the second peak shown in FIG. **29** can be the result of one or more manufacturing plants in a community drawing significant power during a second shift.

Based upon the amount of power drawn from the power utility **29** as shown in FIG. **29**, the power utility **48** can control and operate a number of vehicle charging systems according to the present invention based upon non-peak time periods and upon other factors as described above (charge time end settings, estimated charge times needed to fully charge batteries **20**, times at which battery charge sessions were requested, and the like). For example, a first group of users requesting charge sessions at 2 pm (point **167** in FIG. **29**) can have priority over other groups of users requesting charge sessions at 4 pm and 6 pm (points **169** and **171**), respectively. Accordingly, once the controller **50** of the power utility **48** determines that the power draw by the community has fallen below the preferred maximum level of power draw (e.g., step **157** in FIG. **28**; point **173** in FIG. **29**), the controller **50** can send signals to the vehicle charging systems of the first group of users to begin battery charging. Taking this additional power draw into account, the controller **50** of the power utility **48** can later determine that the power draw by the community has fallen further (point **175** in FIG. **29**), and that the vehicle charging systems of the second user group can be turned on. However, if the total power draw by the community rises again, such as based upon a large draw from a manufacturing facility operating a second shift, the controller **50** of the power utility **48** can temporarily turn off the vehicle charging systems of the second user group and then the first user group in series (points **177** and **179**, respectively), and can turn on the vehicle charging systems of the first and second user groups in series once the total power draw by the community falls again (points **181** and **183**, respectively).

Although the third user group requested charging sessions much earlier as described above, the total power draw by the community remained too high to permit the controller **50** of the power utility **48** to turn on the vehicle charging systems of the third user group until 11 pm. At this point (**185** in FIG. **29**), the total power draw taking into account the first and second groups of users falls sufficiently to permit the controller **50** to turn on the vehicle charging systems of the third user group while still remaining below the preferred maximum power draw described above. The batteries corresponding to the first, second, and third groups of users illustrated in FIG. **29** become fully charged at different times, and cause battery charging to stop at points **187**, **189**, and **191**, respectively.

Application of a vehicle charging system management process (using vehicle charging systems of the present invention) is shown by way of example in FIG. **29**. It will be appreciated that a similar process can be implemented for any other power draw profile of a community, and that any number of charging initiations, interruptions, and re-initiations can occur for any number of users or groups of users throughout the course of a 24-hour period based at least in part upon the needs of the users and any preferred maximum level of power draw determined by the power utility.

The embodiments described above and illustrated in the figures are presented by way of example only and are not intended as a limitation upon the concepts and principles of the present invention. As such, it will be appreciated by one having ordinary skill in the art that various changes in the elements and their configuration and arrangement are possible without departing from the spirit and scope of the present invention. For example, the vehicle charging systems described above and illustrated in connection with the embodiments of FIGS. **2**, **5-11** and **15**; FIG. **3**; FIGS. **4**, **18**, and **19**; FIG. **12**; FIGS. **13**, **14**, and **16**; FIG. **17**; FIGS. **20-23**; FIG. **24**, FIG. **25**, FIG. **26**, FIG. **27**, and FIGS. **28** and **29** each have a number of features, elements, and/or steps. Although these features, elements, and steps are described and illustrated in connection with each embodiment, it should be noted that any sub-combination of such features, elements, and steps can be utilized in other embodiments of the present invention. The particular combination of features, elements, and steps in each illustrated embodiment is presented by way of example only, and does not indicate or imply that embodiments of the present invention must have all such features, elements, and steps.

I claim:

**1**. A vehicle charger for charging a battery of a vehicle, the vehicle charger adapted for communication with a first controller remote from the vehicle and vehicle charger, the vehicle charger adapted for wireless communication with a second controller remote from the vehicle and the vehicle

charger, the second controller associated with a computer, the vehicle charger comprising:

an electrical power cord releasably attachable to at least one of the vehicle and a source of power;

a third controller electrically coupled to the electrical power cord; at least one of a transmitter and a receiver coupled to the third controller and adapted for communication with the first controller and the second controller,

wherein the third controller is responsive to at least one signal from the first controller by automatically changing a charging state of the vehicle charger at a time associated with a cost of power to the battery reaching a threshold cost of power to the battery, the at least one signal related to a cost of electrical power, changing the charging state of the vehicle charger including automatically starting charging when the cost of electrical power is equal to or less than the threshold cost of power,

wherein the third controller is responsive to at least one signal from the second controller by changing a charging state of the vehicle charger to start charging, the at least one signal from the second controller being received by the third controller in response to a user selecting a user-manipulable control on a screen associated with the second controller, and

wherein the user-manipulatable control is operable by the user to start a manual charge of the battery or enter at least one of a group consisting of a time of day by which the battery must be charged and a command to delay charging of the battery by the vehicle charger.

**2**. The vehicle charger of claim **1**, wherein the third controller is adapted for automatic establishment of communication with the first controller upon connection of the vehicle charger with at least one of the battery and the source of power.

**3**. The vehicle charger of claim **1**, further comprising a display coupled to the third controller, the display displaying a level of charge of the battery.

**4**. The vehicle charger of claim **1**, further comprising a display coupled to the third controller, the display displaying an amount of time for the battery to be fully charged based upon information regarding the battery received by the third controller.

**5**. The vehicle charger of claim **1**, further comprising a display displaying a total power cost of a charging session.

**6**. The vehicle charger of claim **1**, wherein the third controller automatically changes the charging state of the vehicle charger based at least in part upon a time of day.

**7**. The vehicle charger of claim **1**, further comprising a battery of the vehicle charger, the battery of the vehicle charger coupled to the third controller and the electrical power cord, and supplying power to charge the battery of the vehicle in at least one state of the vehicle charger.

**8**. A vehicle charger for charging a battery of a vehicle in the course of a charging session, the vehicle charger adapted for wireless communication with a computer remote from the vehicle and vehicle charger, the computer including a remote controller, the vehicle charger comprising:

a controller;

a display coupled to the controller and adapted to display a time; and

a user-manipulatable control coupled to the controller and operable by a user to enter a time of day at which the charging session will end,

wherein the controller automatically changes the supply of electric power to the vehicle battery during the course of the charging session by at least one of a group consisting of increasing a rate of charge of the battery, decreasing the rate of charge of the battery, starting battery charging, and stopping battery charging based at least in part upon the time needed to charge the vehicle battery by the time of day entered by the user,

wherein the controller automatically changes the supply of electric power to the vehicle battery at a time associated with a cost of power to the battery reaching a threshold cost of power to the battery, wherein changing the charging state of the vehicle charger includes automatically starting charging when the cost of power to the battery is equal to or less than the threshold cost of power, and

wherein the controller is responsive to at least one signal from the remote controller by changing the supply of electric power to the vehicle battery to start charging, the at least one signal from the remote controller being received by the controller in response to a user selecting a second user-manipulable control on a screen associated with the remote controller.

**9**. The vehicle charger of claim **8**, wherein the display is mounted in a console within the vehicle.

**10**. The vehicle charger of claim **8**, further comprising at least one of a transmitter and a receiver, wherein the controller is adapted for wireless communication with the remote controller of the computer via the at least one of the transmitter and receiver.

**11**. The vehicle charger of claim **8**, wherein the controller is adapted for automatic establishment of communication with a second controller remote from the vehicle and the vehicle charger upon connection of the vehicle charger with at least one of the battery and a source of power.

**12**. The vehicle charger of claim **8**, wherein the controller is also adapted to display a level of charge of the battery on the display.

**13**. The vehicle charger of claim **8**, wherein the controller is also adapted to display upon the display an amount of time for the battery to be fully charged based upon information regarding the battery received by the controller.

**14**. The vehicle charger of claim **8**, wherein the controller is also adapted to display on the display a total power cost of the charging session.

**15**. A vehicle charger for charging a battery of a vehicle, the vehicle charger adapted for wireless communication with a computer remote from the vehicle and vehicle charger, the computer including a remote controller, the vehicle charger comprising:

a display mounted within the vehicle within reach of a user seated within the vehicle;

a user-manipulatable control within reach of the user seated within the vehicle and by which a user can enter a time of day; and

a controller coupled to the display and to the battery, the controller changing a supply of electric power to charge the battery during the course of a charging session by at least one of a group consisting of increasing a rate of charge of the battery, decreasing the rate of charge of the battery, starting battery charging, and stopping battery charging based at least in part upon the time of day entered by the user,

wherein the controller supplies electric power to the battery if a level of battery charge is below a threshold

level of battery charge independent of the time of day entered by the user, the controller supplying electric power to the battery at least until the threshold level of battery charge is reached,

wherein the controller automatically starts battery charging when a cost of electrical power to the battery is equal to or less than a threshold cost of power to the battery, and

wherein the controller is responsive to at least one signal from the remote controller by changing the supply of electric power to the vehicle battery to start charging, the at least one signal from the remote controller being received by the controller in response to a user selecting a second user-manipulable control on a screen associated with the remote controller.

**16**. The vehicle charger of claim **15**, further comprising at least one of a transmitter and a receiver, wherein the controller is adapted for wireless communication with the remote controller of the computer via the at least one of the transmitter and the receiver.

**17**. The vehicle charger of claim **15**, wherein the controller is adapted for automatic establishment of communication with a second controller remote from the vehicle and the vehicle charger upon connection of the vehicle charger with at least one of the battery and a source of power.

**18**. The vehicle charger of claim **15**, wherein the controller is adapted to display a level of charge of the battery on the display.

**19**. The vehicle charger of claim **15**, wherein the controller is adapted to display upon the display an amount of time for the battery to be fully charged based upon information regarding the battery received by the controller.

**20**. The vehicle charger of claim **15**, wherein the controller is adapted to display on the display a total power cost of the charging session.

* * * * *