US007683570B2

(12) **United States Patent**
Krauer et al.

(10) **Patent No.: US 7,683,570 B2**
(45) **Date of Patent: Mar. 23, 2010**

(54) **SYSTEMS, METHODS, AND APPARATUS FOR BATTERY CHARGING**

(75) Inventors: **Jean-Pierre Krauer**, San Jose, CA (US); **Jeffrey Brian Straubel**, Menlo Park, CA (US); **Troy Adam Nergaard**, San Francisco, CA (US); **Ian Craven**, San Carlos, CA (US); **Arthur Joseph Hebert**, San Carlos, CA (US)

(73) Assignee: **Tesla Motors, Inc.**, San Carlos, CA (US)

(*) Notice: Subject to any disclaimer, the term of this patent is extended or adjusted under 35 U.S.C. 154(b) by 498 days.

(21) Appl. No.: **11/779,829**

(22) Filed: **Jul. 18, 2007**

(65) **Prior Publication Data**

US 2009/0020346 A1 Jan. 22, 2009

(51) **Int. Cl.**
H02J 7/14 (2006.01)
B60W 10/24 (2006.01)
G08B 21/00 (2006.01)

(52) **U.S. Cl.** **320/104**; 180/65.29; 340/640

(58) **Field of Classification Search** ..... 320/104; 180/65.1, 65.21, 65.29, 65.3; 307/9.1, 10.1, 307/10.7; 429/50, 61, 62; 290/16, 40 F; 903/903, 907; 318/139, 143, 479, 400.3; 701/22; 340/640
See application file for complete search history.

(56) **References Cited**

U.S. PATENT DOCUMENTS

5,696,436	A	12/1997	Kim et al.	
6,018,224	A	1/2000	Cocconi	
7,228,926	B2 *	6/2007	Takami et al.	180/65.265
7,608,940	B2 *	10/2009	Osawa	307/10.7
2003/0158638	A1 *	8/2003	Yakes et al.	701/22
2004/0071003	A1	4/2004	Cocconi	

* cited by examiner

Primary Examiner—Patrick J Assouad
Assistant Examiner—M'Baye Diao
(74) *Attorney, Agent, or Firm*—Schwegman, Lundberg & Woessner P.A.

(57) **ABSTRACT**

An apparatus including a rechargeable battery pack installed in an electric vehicle, the rechargeable battery pack coupled to a power supply, the power supply operable to provide a charge voltage to perform charging operations on the battery pack, a heating element to heat a fluid to be circulated through the rechargeable battery pack, a comparator circuit to compare a battery voltage of the rechargeable battery pack to a line source voltage, the comparator circuit operable to compare the battery voltage to the line source voltage and to provide an output signal when the battery voltage is less than a line voltage offset value, and a control circuit coupled to receive the output signal of the comparator, and to couple the line source voltage to the power supply, an to bypass the heating element if the comparator is not providing the output signal.

20 Claims, 8 Drawing Sheets

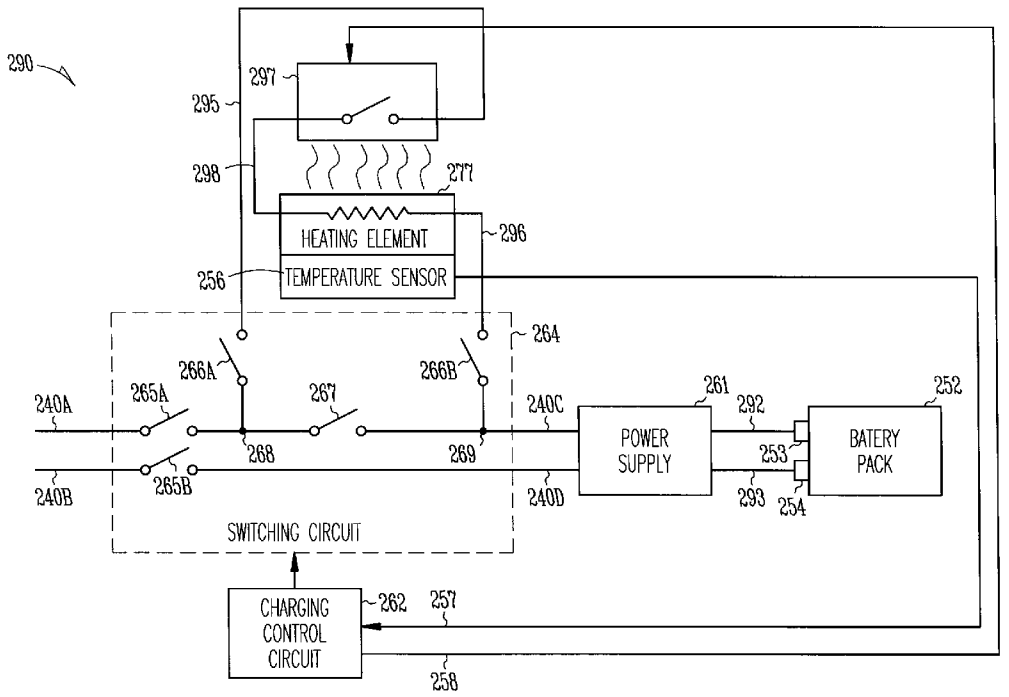

ChargeLogic LLC - **Ex. 2032**
IPR2026-00380
Tesla Inc. v. ChargeLogic LLC

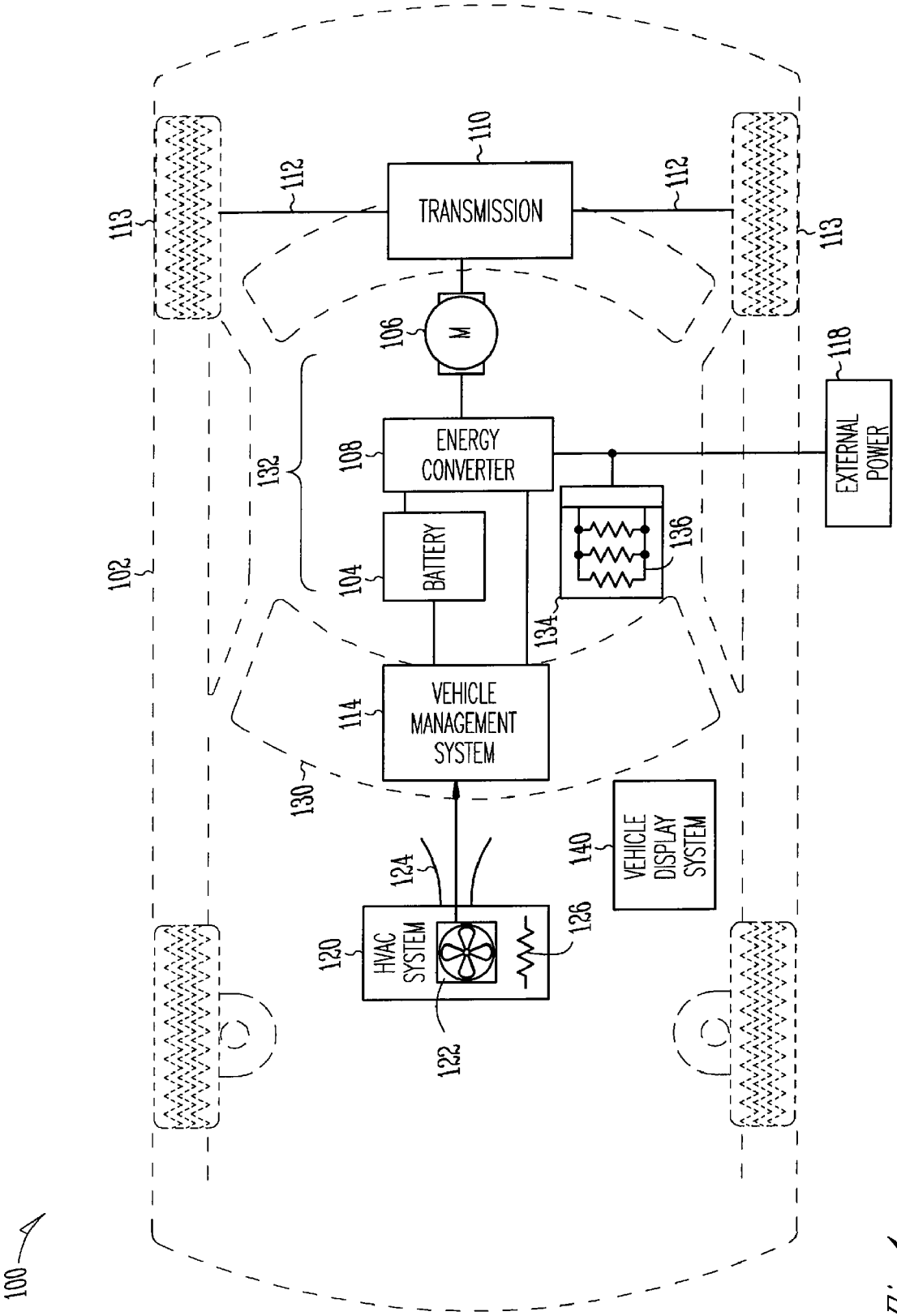
TRANSMISSION
M
ENERGY CONVERTER
BATTERY
EXTERNAL POWER
VEHICLE MANAGEMENT SYSTEM
VEHICLE DISPLAY SYSTEM
HVAC SYSTEM
100
102
104
106
108
110
112
113
114
118
120
122
124
126
130
132
134
136
140

Fig. 1

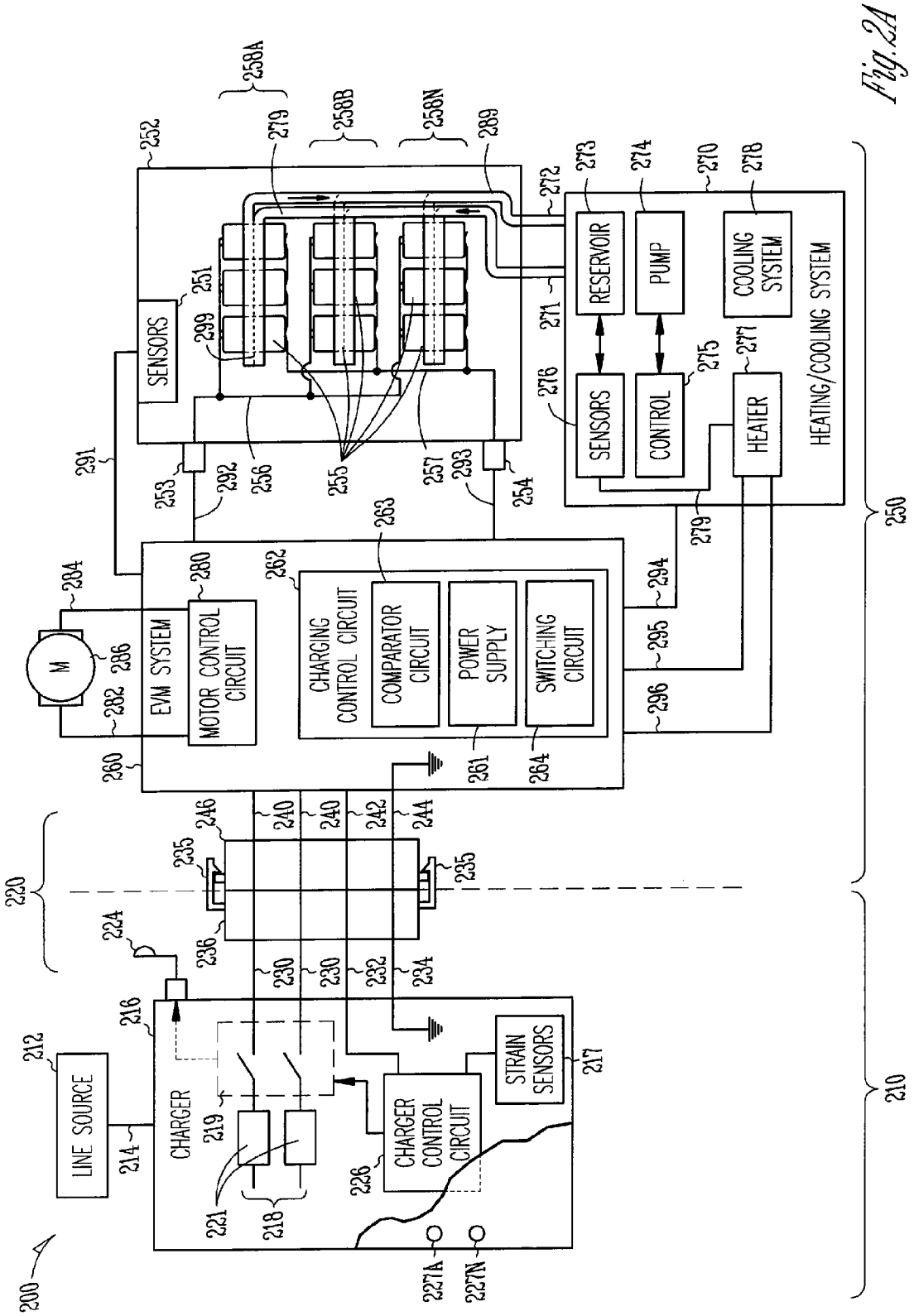
SENSORS
RESERVOIR
PUMP
COOLING SYSTEM
SENSORS
CONTROL
HEATER
HEATING/COOLING SYSTEM
EVM SYSTEM
MOTOR CONTROL CIRCUIT
CHARGING CONTROL CIRCUIT
COMPARATOR CIRCUIT
POWER SUPPLY
SWITCHING CIRCUIT
M
LINE SOURCE
CHARGER
CHARGER CONTROL CIRCUIT
STRAIN SENSORS
200
210
212
214
216
217
218
219
220
221
224
226
227A
227N
230
232
234
235
236
240
242
244
246
250
251
252
253
254
255
256
257
258A
258B
258N
260
261
262
263
264
270
271
272
273
274
275
276
277
278
279
280
282
284
289
291
292
293
294
295
296
299

Fig. 2A

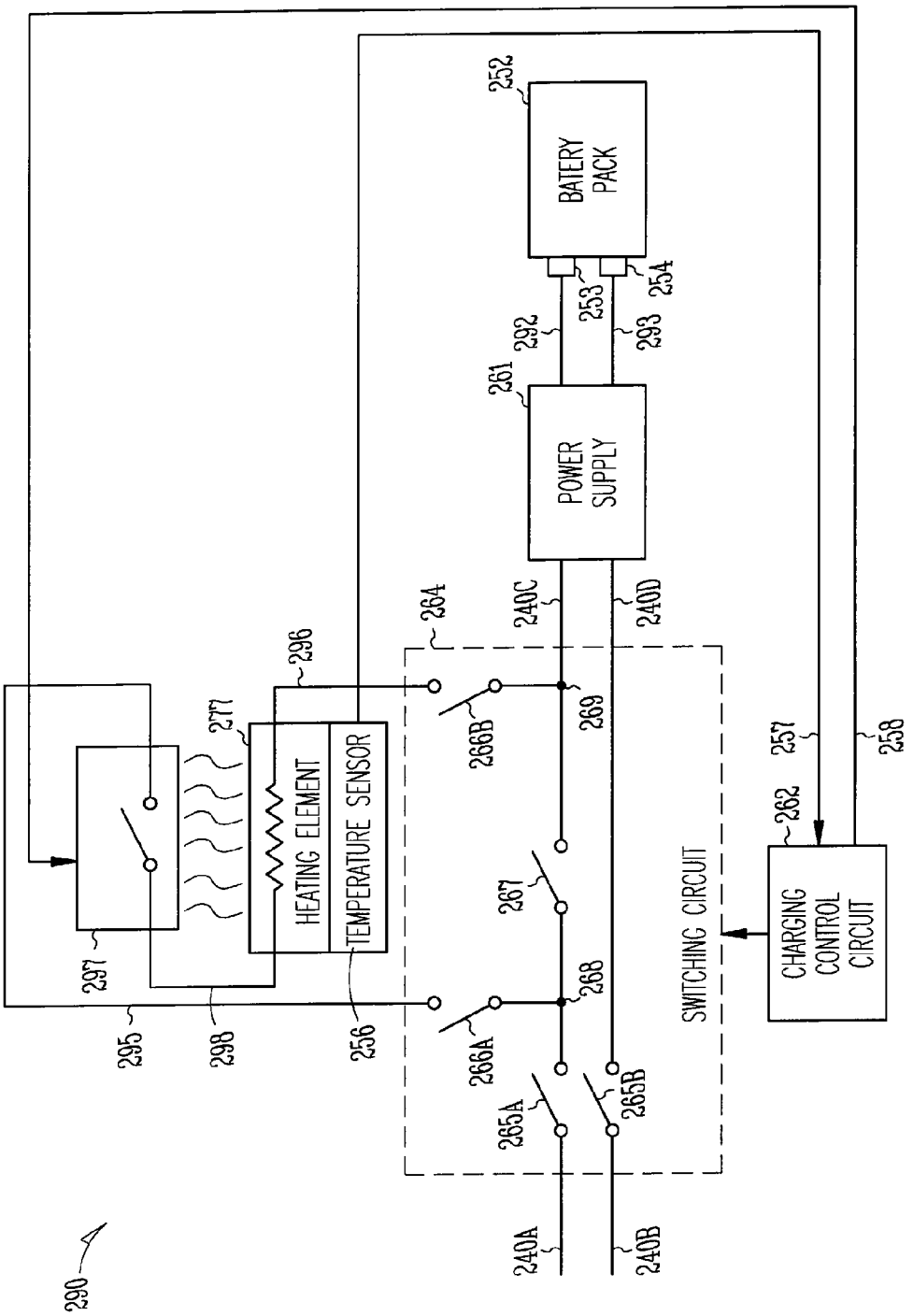
BATERY PACK
POWER SUPPLY
HEATING ELEMENT
TEMPERATURE SENSOR
SWITCHING CIRCUIT
CHARGING CONTROL CIRCUIT
252
253
254
292
293
261
240C
240D
264
296
277
266B
269
257
258
262
267
268
297
295
298
256
266A
265A
265B
240A
240B
290

Fig. 2B

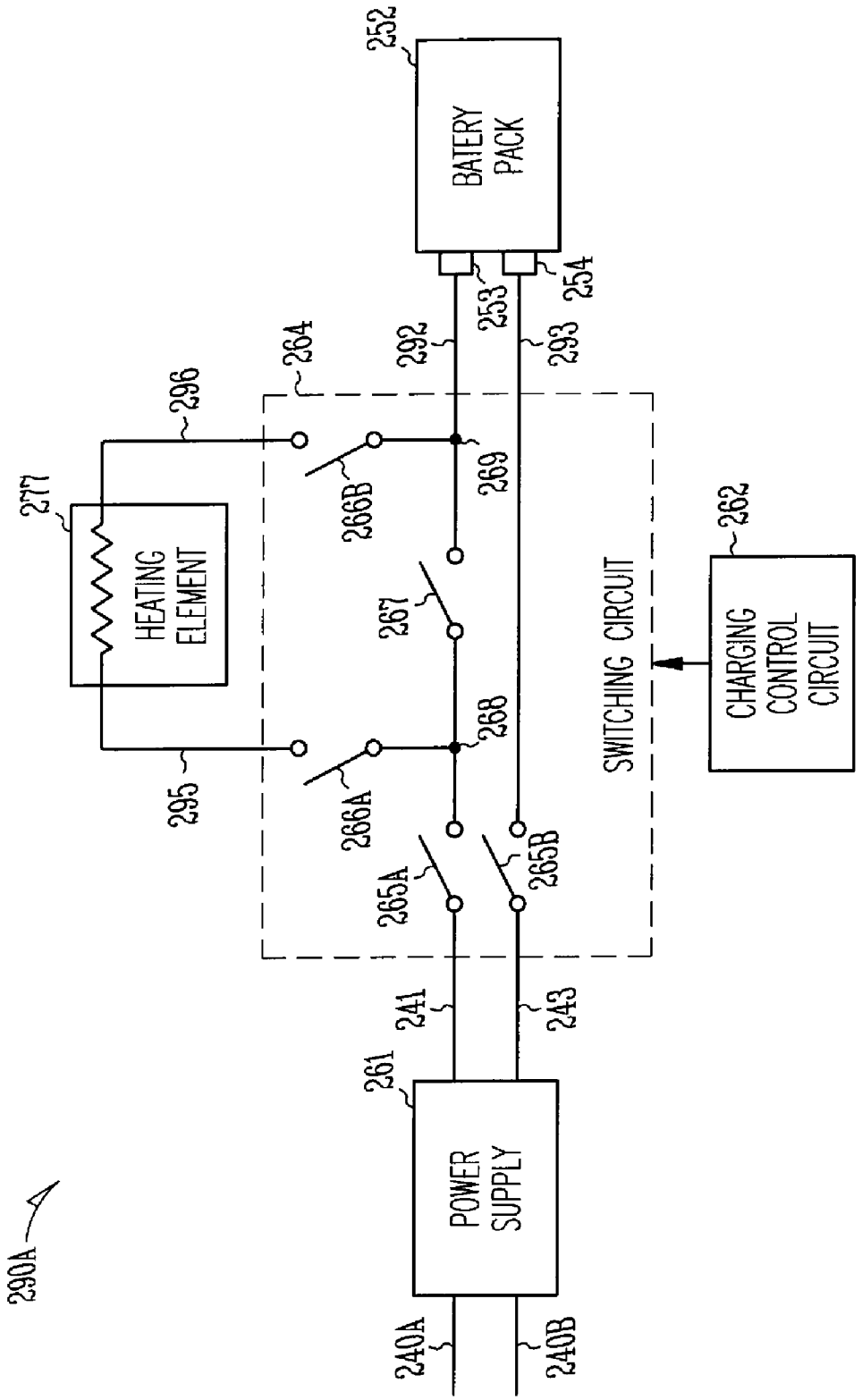
BATERY PACK
252
253
254
292
293
264
296
277
HEATING ELEMENT
266B
269
267
268
266A
295
SWITCHING CIRCUIT
CHARGING CONTROL CIRCUIT
262
265A
265B
241
243
261
POWER SUPPLY
240A
240B
290A

Fig.2C

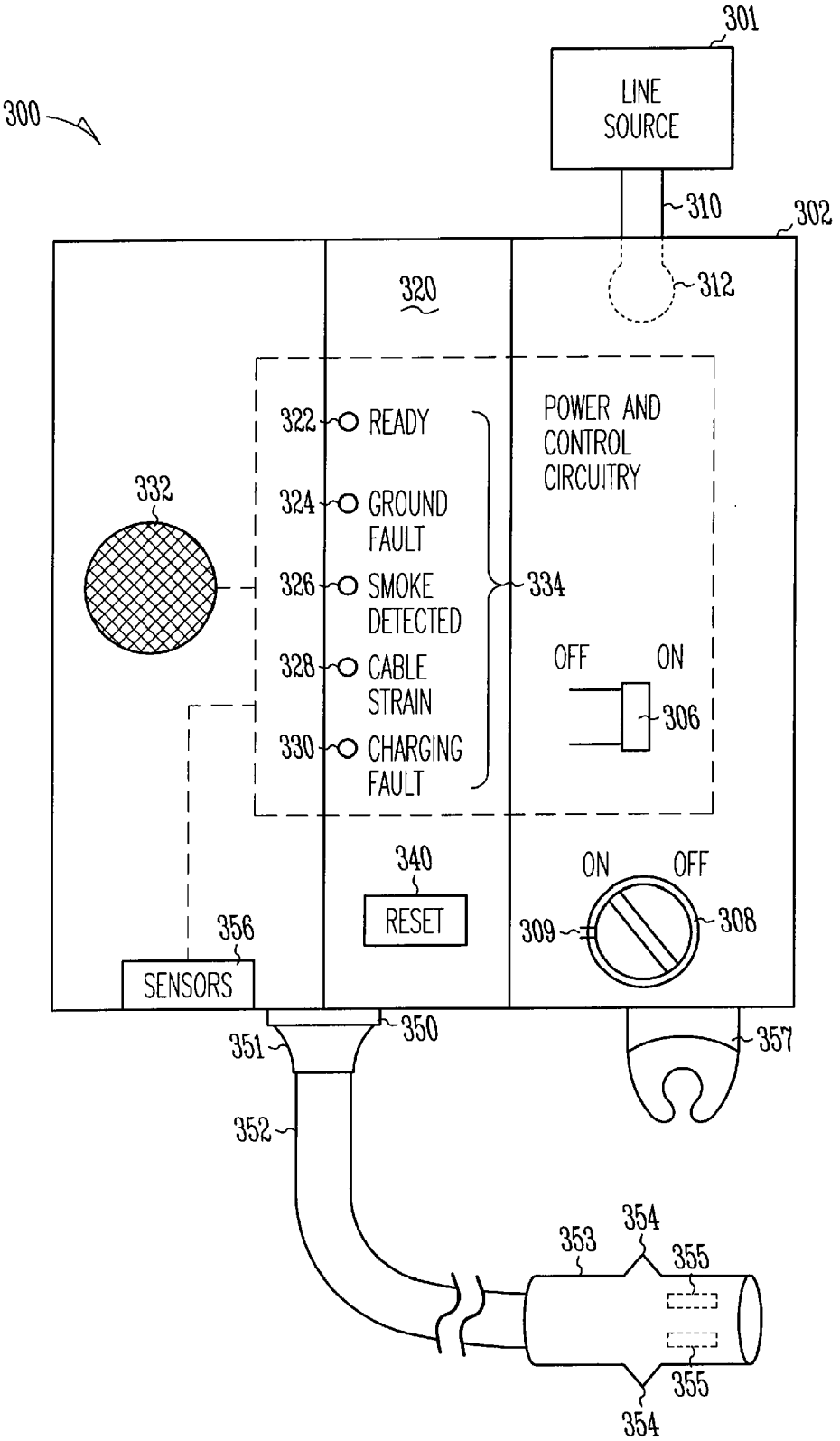
300
301
LINE SOURCE
310
302
312
320
322
READY
324
GROUND FAULT
326
SMOKE DETECTED
328
CABLE STRAIN
330
CHARGING FAULT
334
POWER AND CONTROL CIRCUITRY
OFF
ON
306
332
340
RESET
ON
OFF
309
308
356
SENSORS
351
350
357
352
353
354
355
355
354

Fig. 3

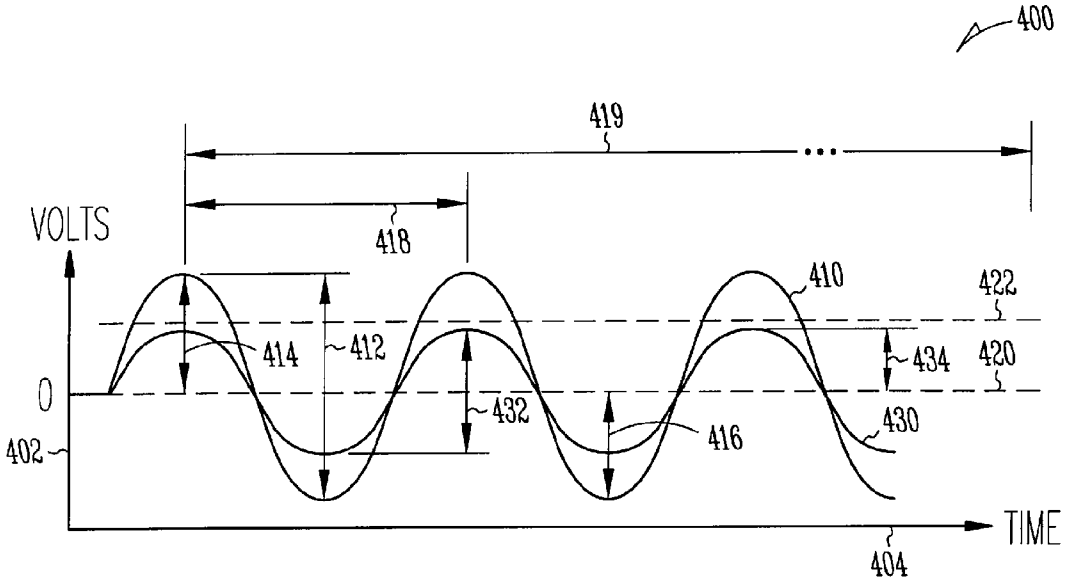
400
419
418
VOLTS
410
422
414
412
434
420
0
432
416
430
402
TIME
404

Fig. 4A

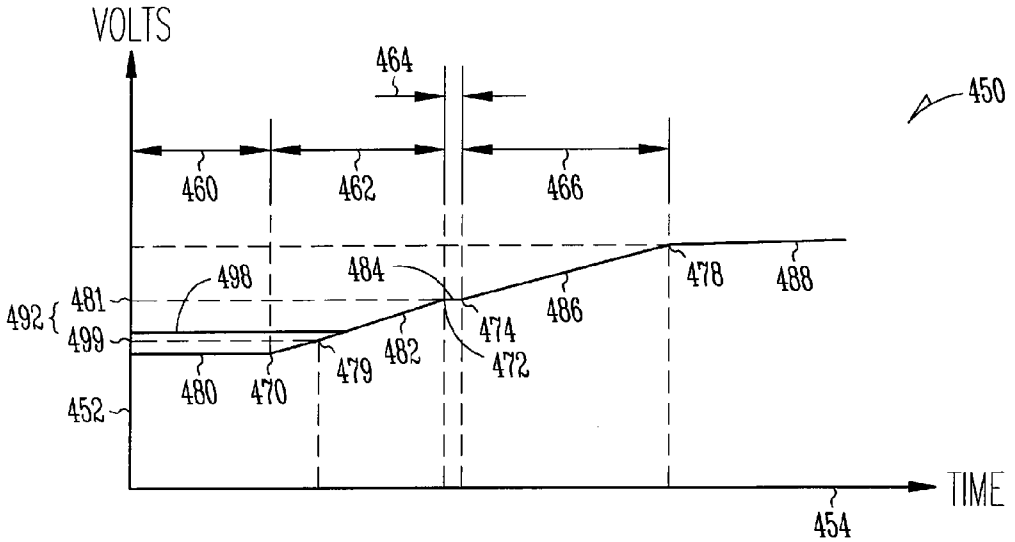
VOLTS
464
450
460
462
466
498
484
478
488
492
481
486
499
474
482
472
479
480
470
452
TIME
454

Fig. 4B

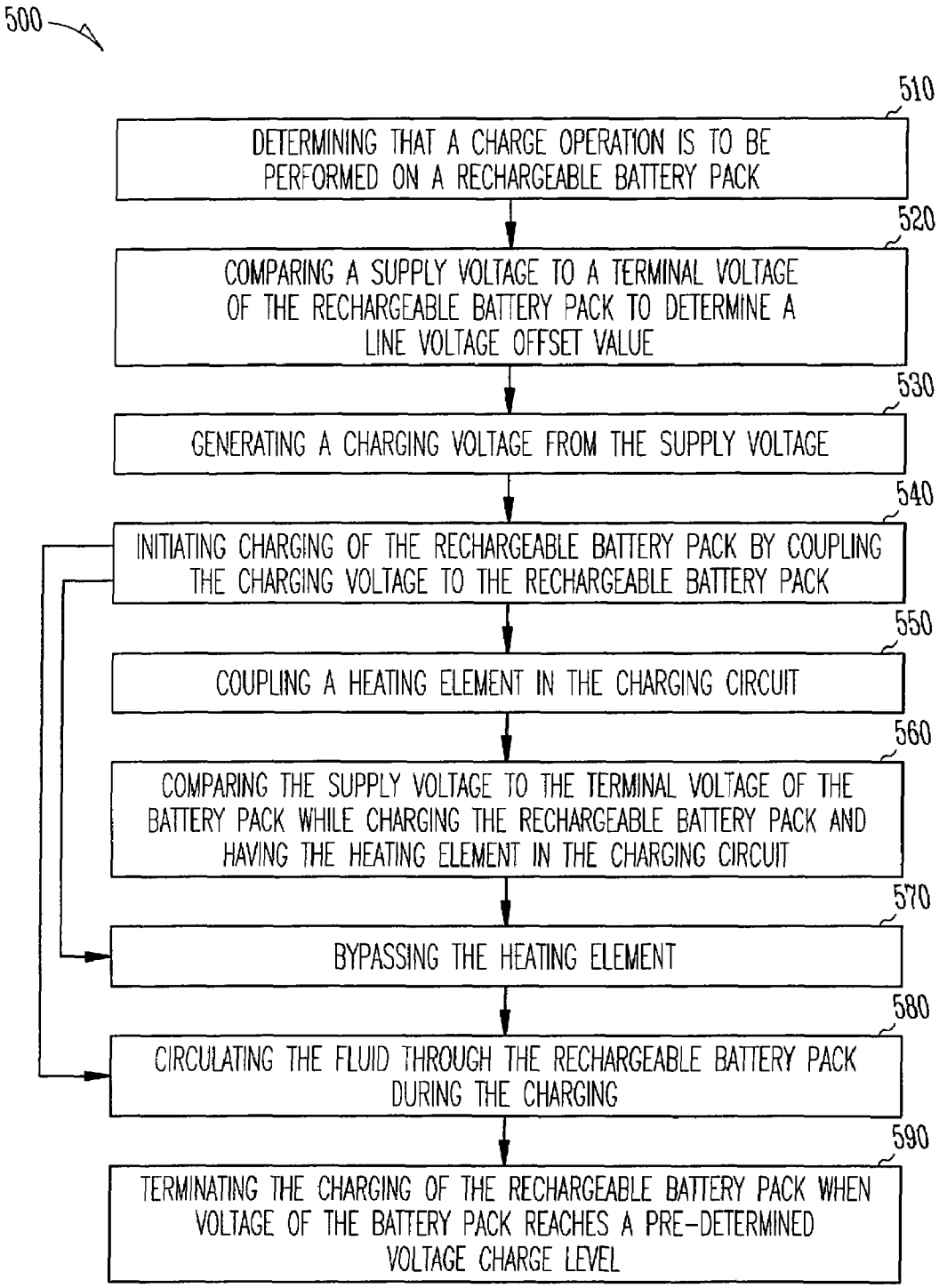
500
510
DETERMINING THAT A CHARGE OPERATION IS TO BE PERFORMED ON A RECHARGEABLE BATTERY PACK
520
COMPARING A SUPPLY VOLTAGE TO A TERMINAL VOLTAGE OF THE RECHARGEABLE BATTERY PACK TO DETERMINE A LINE VOLTAGE OFFSET VALUE
530
GENERATING A CHARGING VOLTAGE FROM THE SUPPLY VOLTAGE
540
INITIATING CHARGING OF THE RECHARGEABLE BATTERY PACK BY COUPLING THE CHARGING VOLTAGE TO THE RECHARGEABLE BATTERY PACK
550
COUPLING A HEATING ELEMENT IN THE CHARGING CIRCUIT
560
COMPARING THE SUPPLY VOLTAGE TO THE TERMINAL VOLTAGE OF THE BATTERY PACK WHILE CHARGING THE RECHARGEABLE BATTERY PACK AND HAVING THE HEATING ELEMENT IN THE CHARGING CIRCUIT
570
BYPASSING THE HEATING ELEMENT
580
CIRCULATING THE FLUID THROUGH THE RECHARGEABLE BATTERY PACK DURING THE CHARGING
590
TERMINATING THE CHARGING OF THE RECHARGEABLE BATTERY PACK WHEN VOLTAGE OF THE BATTERY PACK REACHES A PRE-DETERMINED VOLTAGE CHARGE LEVEL

Fig. 5

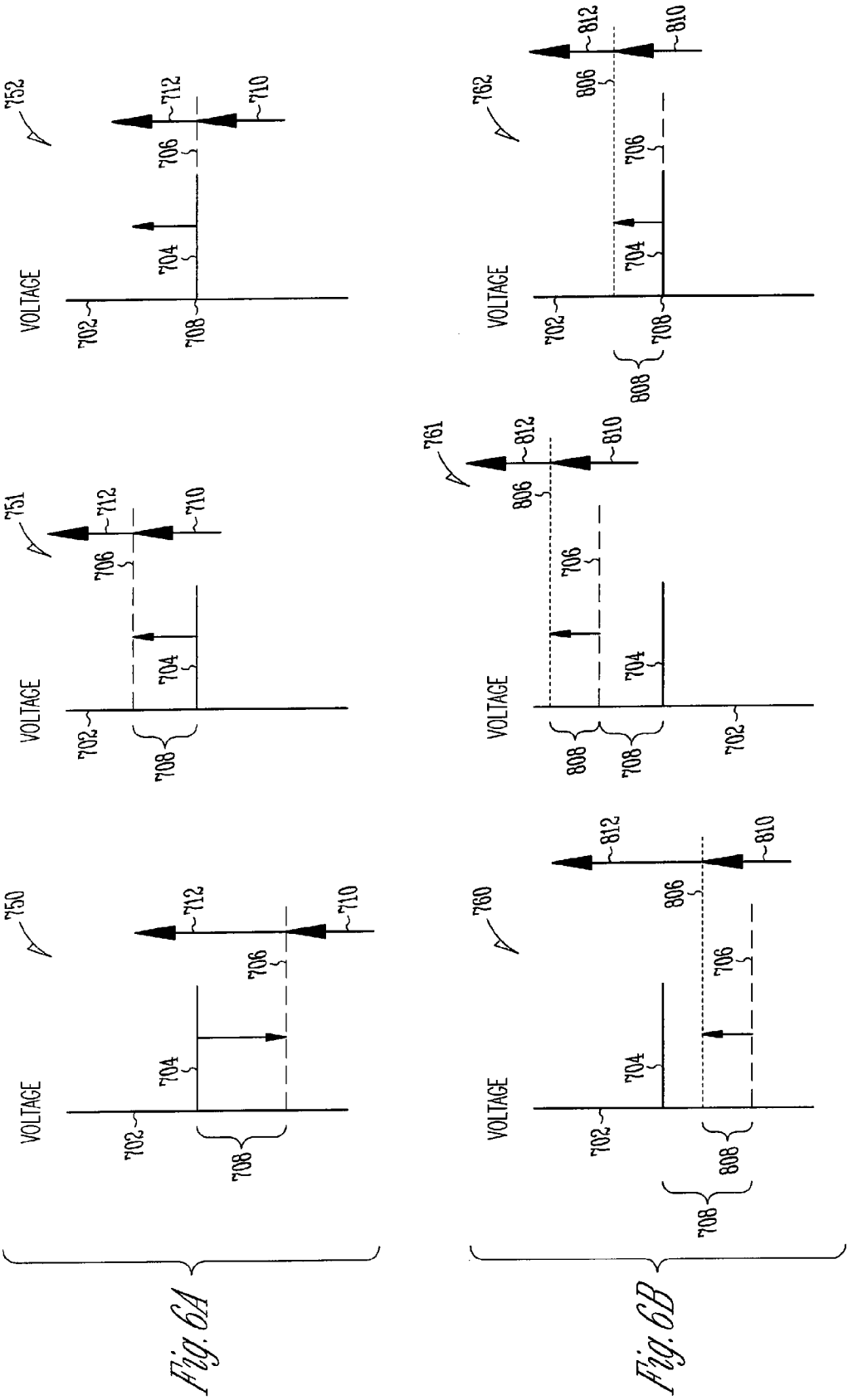
750
751
752
VOLTAGE
702
704
706
708
710
712
760
761
762
806
808
810
812

Fig. 6A

Fig. 6B

SYSTEMS, METHODS, AND APPARATUS FOR BATTERY CHARGING

BACKGROUND

Electric vehicles generally include vehicles that have some device, usually a battery, that stores energy, and that is operable to provide electrical power to one or more systems used, to at least in part, propel or to accelerate the electrical vehicle, or to provide the energy required for some motions of the vehicle. As the stored energy is consumed through either use in the electric vehicle or through some other form of energy dissipation, the source of the stored energy needs to be recharged in order to replenish the level of stored energy.

BRIEF DESCRIPTION OF THE DRAWINGS

FIG. **1** shows a vehicle system to various embodiments of the present subject matter;

FIG. **2**A shows a functional block diagram of a charging system **200** for a battery pack **252** according to various embodiments of the present subject matter;

FIG. **2**B shows a charging circuit according to various embodiments of the present subject matter;

FIG. **2**C shows a charging circuit according to various embodiments of the present subject matter;

FIG. **3** shows a charging station according to various embodiments of the present subject matter;

FIG. **4**A shows a graph including a voltage waveform according to various embodiments of the present subject matter;

FIG. **4**B shows a graph **450** of a voltage level for a battery pack during a charging operation according to various embodiments of the present subject matter;

FIG. **5** shows a flowchart for one or more methods according to various embodiments of the present subject matter.

FIG. **6**A shows diagrams of voltage levels according to various embodiments of the present subject matter;

FIG. **6**B shows diagrams of voltage levels according to various embodiments of the present subject matter.

DETAILED DESCRIPTION

In the following description, reference is made to the accompanying drawings that form a part hereof, and in which is shown by way of illustration specific embodiments which may be practiced. These embodiments are described in sufficient detail to enable those skilled in the art to practice the invention, and it is to be understood that other embodiments may be utilized and that structural, logical and electrical changes may be made without departing from the scope of the present invention. The following description of example embodiments is, therefore, not to be taken in a limited sense, and the scope of the present invention is defined by the appended claims.

Electric vehicles (EVs) include vehicles that have one or more sources of stored energy designed to provide electrical energy to the vehicle, wherein the electrical energy is used to at least in part to provide some energy used to propel the vehicle's motions. Electrical vehicles may include vehicles designed to carry passengers, to transport goods, or to provide specialty work capabilities. For example, electrical vehicles include passenger automobiles, trucks, and recreational water crafts such as boats. In addition, electrical vehicles include specialty vehicles, such as fork trucks used to lift and move cargo, vehicles that incorporate conveyor belts to move objects, such as mobile conveyor belt vehicles used to load and unload cargo such as luggage from airplanes, and specialty equipment used in areas where exhaust fumes from typical gasoline, diesel, or propane powered equipment may present hazards to personnel, such as in underground mining operations. In various instances, electric vehicles are designed and intended to be operated on public highways as licensed automobiles, including both cars and trucks.

Generally, an electric vehicle includes some form of a device or devices capable of storing energy and that is operable to provide electrical power to the vehicle. The electrical power may be used to at least in part provide energy for propelling the vehicle's motion. In some instances, the electrical power is used to provide the energy required for all of the vehicle's motion, including propelling the vehicle. In many instances, the source of the stored energy is a rechargeable battery pack. In various embodiments, a rechargeable battery pack includes a plurality of individual rechargeable battery cells that are electrically coupled to provide a rechargeable battery pack.

FIG. **1** shows a vehicle system **100**, according to various embodiments of the present subject matter. In various embodiments, the vehicle **102** is an electric vehicle and includes a vehicle propulsion battery **104** and at least one propulsion motor **106** for converting battery energy into mechanical motion, such as rotary motion. The present subject matter includes examples in which the vehicle propulsion battery **104** is a subcomponent of an energy storage system ("ESS"). An ESS includes various components associated with transmitting energy to and from the vehicle propulsion battery in various examples, including safety components, cooling components, heating components, rectifiers, etc. The inventors have contemplated several examples of ESS and the present subject matter should not be construed to be limited to the configurations disclosed herein, as other configurations of a vehicle propulsion battery and ancillary components are possible.

The battery includes a lithium ion battery in various examples. In some examples, the battery includes a plurality of lithium ion batteries coupled in parallel and/or series. Some examples include cylindrical lithium ion batteries. In some examples, the ESS includes one or more batteries compatible with the 18650 battery standard, but the present subject matter is not so limited. Some examples include approximately 2981 batteries which are interconnected. The vehicle propulsion battery **104**, in some examples, provides approximately 390 volts.

Additionally illustrated is a energy converter **108**. The energy converter **108** is part of a system which converts energy from the vehicle propulsion battery **104** into energy useable by the at least one propulsion motor **106**. In some instances, the energy flow is from the at least one propulsion motor **106** to the vehicle propulsion battery **104**. As such, in some examples, the vehicle propulsion battery **104** transmits energy to the energy converter **108**, which converts the energy into energy usable by the at least one propulsion motor **106** to propel the electric vehicle. In additional examples, the at least one propulsion motor **106** generates energy that is transmitted to the energy converter **108**. In these examples, the energy converter **108** converts the energy into energy which can be stored in the vehicle propulsion battery **104**. In some examples, the energy converter **108** includes transistors. Some examples include one or more field effect transistors. Some examples include metal oxide semiconductor field effect transistors. Some examples include one or more insulated gate bipolar transistors. As such, in various examples, the energy converter **108** includes a switch bank which is configured to receive direct current ("DC") power from the

vehicle propulsion battery **104** and to output three-phase alternating current ("AC") to power the vehicle propulsion motor **106**. In some examples, the energy converter **108** is configured to convert a three phase output from the vehicle propulsion motor **106** to DC power to be stored in the vehicle propulsion battery **104**. Some examples of the energy converter **108** convert energy from the vehicle propulsion battery **104** into energy usable by electrical loads other than the vehicle propulsion motor **106**. Some of these examples switch energy from approximately 390 Volts to 14 Volts.

The propulsion motor **106** is a three phase alternating current ("AC") motor, in various examples. Some examples include a plurality of such motors. The present subject matter can optionally include a transmission **110** in some examples. While some examples include a 2-speed transmission, other examples are contemplated. Manually clutched transmissions are contemplated, as are those with hydraulic, electric, or electrohydraulic clutch actuation. Some examples employ a dual-clutch system that, during shifting, phases from one clutch coupled to a first gear to another coupled to a second gear. Rotary motion is transmitted from the transmission **110** to wheels **113** via one or more axles **112**, in various examples.

A vehicle management system **114** is optionally provided which provides control for one or more of the vehicle propulsion battery **104** and the energy converter **108**. In some examples, the vehicle management system is coupled to a vehicle system which monitors safety (such as a crash sensor). In some examples the vehicle management system is coupled to one or more driver inputs (such as a speed adjuster, colloquially termed a throttle, although the present subject matter is not limited to examples having an actual throttle). The vehicle system is configured to control power to one or more of the vehicle propulsion battery **104** and the energy converter **108**, in various embodiments.

A charging station **118** is provided to transmit energy with the vehicle propulsion battery **104**, in various examples. In some examples, the charging station converts power from a single phase 110V AC power source into power storable by the vehicle propulsion battery **104**. In additional examples, the charging station converts power from a 220V AC power source into power storable by the vehicle propulsion battery **104**. The present subject matter is not limited to examples in which a converter for converting energy from an external source to energy usable by the vehicle **102** is located outside the vehicle **102**, and other examples are contemplated.

In various embodiments, vehicle system **100** includes a windshield **130** and a passenger compartment **132**. Passenger compartment **132** includes one or more passenger seats **134**. In various embodiment, a heater/ventilation/air-conditioning (HVAC) system **120** is included in vehicle system **100** to provide safety and comfort features for passengers (not shown in FIG. **1**) within the passenger compartment **132**. In various embodiments, HVAC system **120** includes a fan **122** and air ducts **124** operable to circulate heated or cooled air into the passenger compartment **132**. In various embodiments, HVAC system **120** includes an electrically resistive heating element operable to heat air in the HVAC system **120** when electrical power is provided to heating elements **126**. The heated air can be circulated by fan **122** in order to provide heat in the passenger compartment **132**, and to provide safety functions, such as defrosting or defogging, of windshield **130**.

In various embodiments, vehicle system **100** includes a vehicle display system (VDS) **140**. VDS **140** is operable to display visual information about vehicle system **100**, including information related to the state of the propulsion battery **104**, including battery charge. In various embodiments, VDS **140** allows one or more inputs to be made to vehicle system **100**. Inputs can be made through any device associated with the VDS **140** operable to allow inputs to VDS **140**, including pushbuttons. In various embodiments, a display screen coupled to VDS **140** is a touch screen that allows inputs to be made to VDS **140**. In various embodiments, VDS **140** allows inputs for making a selection of a charge level for the propulsion battery **104** included in vehicle system **100** related to one or more upcoming charge operations of the propulsion battery **104**, or for a charging operation currently in process.

In various embodiments, one or more banks of electrically resistive heating elements **136** provide a heated seat for a passenger when electrical power is provided to the banks of heating elements **136**. In various embodiments, either of heating element **126** or heating elements **136**, or both, are used as part of a charging circuit as a voltage divider when performing a charging operation on the vehicle propulsion battery **104**, as further described herein.

FIG. **2**A shows a functional block diagram of a charging system **200** for a battery pack **252** according to various embodiments of the present subject matter. In various embodiments, charging system **200** includes an electric vehicle **250** coupled to a charger station **210**. Electric vehicle **250** is not limited to any particular type of electric vehicle. In various embodiments, electric vehicle **250** includes the vehicle **102** as described with respect to FIG. **1**. Charger station **210** is not limited to any particular type of charger station. In various embodiments, charger station **210** is charger station **300** as described with respect to FIG. **3**.

Referring again to FIG. **2**A, charger station **210** includes a charger **216** coupled to line source **212** through connection **214** and coupled to the electric vehicle **250** through connection **220**. Electric vehicle **250** includes an electric vehicle management (EVM) system **260** coupled to a battery pack **252** and a heating/cooling system **270**. Heating/cooling system **270** is mechanically coupled to battery pack **252** in order to provide heating and cooling of battery pack **252**, as further described herein. Heating/cooling system **270** is electrically coupled to EVM system **260** as further described herein.

In various embodiments, EVM system **260** includes a motor control circuit **280** coupled to a drive motor **286**. In various embodiments, motor control circuit **280** is operable to use power provided by battery pack **252** to condition and control electrical power provided to drive motor **286**. In various embodiments, drive motor **286** is operable to propel electric vehicle **250**. In various embodiments, motor control circuit **280** and drive motor **286** are only operable when electric vehicle **250** is physically disconnected from charger station **210**.

In various embodiments, charger station **210** is detachably coupled to electric vehicle **250** through connection **220**. Detachably coupled refers to connection **220** being operable to be physically connected and disconnected, and thus operable to connect and disconnect, charger station **210** to and from electric vehicle **250**. When physically connected to electric vehicle **250**, charger station **210** is operable to provide electrical power to electric vehicle **250** over one or more interconnects **230** to one or more interconnects **240**, wherein interconnects **240** are part of electric vehicle **250**. In various embodiments, connection **220** includes a ground connection **234** coupled to a ground connection **244** in electric vehicle **250**. In various embodiments, connection **220** includes a signal interconnect **232** coupled to interconnect **242** and coupled to charger control circuit **226** in charger station **210**, Signal interconnect **232** and interconnect **242** are operable to allow communication and control signals to be transferred back and forth between charger station **210** and electric vehicle **250**.

Interconnects **230**, **240**, **232**, **242**, **234**, and **244** are not limited to any particular type of connections, and in various embodiments include any combinations of physical conductors, multi-conductor cables, bus lines, transmission lines, and wireless connections, operable to allow communication and control signals to be transferred in either direction, or both directions, between charger station **210** and electric vehicle **250**. In various embodiments, connection **220** includes an automotive standard bus, such as a CAN bus, coupling charger control circuit **226** with the electric vehicle **250**.

Connection **220** is not limited to any particular type of connection. In various embodiments, connection **220** includes a connector **236** that is part of the charger station **210**, and a connector **246** that is part of the electric vehicle **250**. Connectors **236** and **246** are detachably connectable to allow a connection to be made between interconnects **230** and **240**, and between interconnects **232** and **242**, and between ground connections **234** and **244**, as these interconnect are provided in connection **220**. In various embodiments, connector **236** and **246** are standard pin and sleeve connectors designed to conform with some known standard type of connector.

In various embodiments, connector **236** is a custom-designed connector operable to couple to connector **246**, wherein connector **246** is a custom and unique design intended to allow coupling only with a connector having a design matching connector **236**.

In various embodiments, connection **220** is operable to couple charger station **210** and electric vehicle **250** in order to allow charging of battery pack **252**, and is operable to allow physically disconnecting charger station **210** from electric vehicle **250** in order to allow electric vehicle **250** to move to areas away from, and free from any physical connections with, charger station **210**.

In various embodiments, charger **216** includes one or more strain sensors **217** coupled to the charger control circuit **226**. In various embodiments, strain sensors **217** are operable to detect a level of strain on connection **220**, such as a pulling force on connection **220**, and to provide a signal that strain exists on the connection **220**, (or in some embodiments, to stop providing a signal indicating that no strain exists in connection **220**) to charger control circuit **226**. In various embodiments, charger control circuit **226** is operable to remove power from connection **220** in response to a signal from the strain sensors **217**, or in various embodiments, to remove power in response to not receiving a signal for the strain sensors **217**—as in a fail—safe mode of operation. In various embodiments, charger **216** includes a plurality of indicators **227**A-**227**N operable to visually indicate various conditions associated with charging system **200**, including but not limited to an visual indication that connection **220** has received an excessive amount of strain resulting in a cable strain fault condition.

In various embodiments, connectors **236** and **246** include a mechanical, electrical, or electro/mechanical detect mechanism **235** operable to prevent connectors **236** and **246** from being physically disconnected if power is present and is applied to connection **220** through interconnects **230** and **240**.

In various embodiments, line source **212** is coupled to charger **216** and is operable to provide electrical power to charger **216** for operations including charging operations of battery pack **252**. Line source **212** is not limited to providing any particular voltage or type of electrical power. In various embodiments, line source **212** provides single phase electrical power. In various embodiments, line source **212** provides multi-phase electrical power, including but not limited to 3-phase electrical power, including but not limited to "wye" and "delta" arrangements. In various embodiments, line source **212** provides electrical power referenced to a ground level. Line source **212** is not limited to a particular voltage level. In various embodiments, line source **212** provides a voltage level at one of a commercially available electrical power supply voltage levels as provided by an electric utility company. In various embodiments, line source **212** provides a single phase, **220** volt alternating current (AC) source of electrical power. Line source **212**, connection **214**, charger **216**, and connection **220** have conductors appropriately sized and constructed to carry the voltage and current levels used in the operations of the charger station **210** and electric vehicle **250**, including operations involving recharging of battery pack **252** from line source **212** through charger station **210**.

Various embodiments of charger **216** include one or more devices **218** for control of the electrical power delivered from line source **212** to electric vehicle **250** through charger **216**. In various embodiments, devices **218** include one or more devices **221** for limiting the maximum current provided from charger **216** to connection **220**. In various embodiments, devices **221** are fuses. In various embodiments, devices **221** include a circuit breaker. In various embodiments, devices **221** include a ground fault interrupt circuit in combination with a circuit breaker, wherein the ground fault interrupt circuit is operable to open the circuit breaker in the event a ground fault is detected.

In various embodiments, charger **216** includes switching circuit **219**. Switching circuit **219** is operable to connect and to disconnect the electrical power provided from line source **212** from electric vehicle **250**. In various embodiments, switching circuit **219** includes a mechanical relay. In various embodiments, switching circuit **219** includes solid state relays or other solid state switching devices. In various embodiments, charger control circuit **226** is coupled to switching circuit **219**, and is operable to control opening and closing of switching circuit **219**. In various embodiments, charger control circuit **226** provides a signal to cause switching circuit **219** to couple the line source **212** to connection **220**, and when the signal is not present, switching circuit **219** is operable to disconnect line source **212** from connection **220**. In various embodiments, charger control circuit **226** will cause switching circuit **219** to disconnect line source **212** from connection **220** when the status of strain sensors **217** indicates a level of strain on connection **220** above some given level, or when a signal from strain sensors **217** is not being received at charger control circuit **226** to indicate a safe condition with respect to the strain on connection **220**.

In various embodiments, charger **216** includes a manual switch **224**. In various embodiments, manual switch **224** is coupled to switching circuit **219** and operable to allow connection and disconnection of line source **212** from connection **220** through the actuation of manual switch **224**. In various embodiments, actuation of manual switch **224** to an "OFF" position disconnects line source **212** from connection **220** regardless of any signals from charger control circuit **226**. In various embodiments, manual switch **224** must be actuated to an "ON" position in order for line source **212** to be electrically coupled to connection **220**. In various embodiments, manual switch **224** must be in an "ON" position, and a control signal from charger control circuit **226** must also be provided in order for line source **212** to be electrically coupled to connection **220**. In various embodiments, manual switch **224** includes a "OFF" position that allows manual switch **224** to be locked in the "OFF" position, using a locking device (not shown in FIG. **2**A) such as but not limited to a padlock.

Connection **220** is operable to couple electrical power from line source **212** to EVM system **260**. EVM system **260** is

operable to couple electrical power received through connection **220** to battery pack **252** for performing charging operations on battery pack **252**. In various embodiments, EVM system **260** receives electrical power from lines source **212**, and uses charging control circuit **262** to manipulate power supply **261** to provide as an output from power supply **261** a voltage source operable for use in recharging battery pack **252**. Manipulation of the electrical power from line source **212** by charging control circuit **262** is not limited to any particular type or types of manipulation, and may include manipulation of the voltage level, providing current control, altering the number of phases, rectification of AC electrical power, filtering of the electrical power, and changing and the phase relationships between phases of any power provided from line source **212** through connection **220** to power supply **261**. Charge control circuit is not limited to any particular charger topology. Charger control circuit **262** may include any charging topology operable to perform the charging operation described herein, including by not limited to Boost, Buck, and flyback charger topologies.

In various embodiments, power supply **261** is operable to provide a voltage source for charging operations of battery pack **252** and to provide one or more other sources of electrical power at one or more different voltages for use in other functions requiring electrical power in electric vehicle **250**. In various embodiments, power supply **261** provide electrical power for powering sensors, such as sensors **251** and **276**, and for powering one or more devices including controls circuits and devices, such as control **275** and pump **274**, as shown in FIG. **2**A.

In various embodiments, battery pack **252** includes a plurality of battery cells **255**. In various embodiments, subgroups of battery cells **255** are electrically coupled together form bricks of battery cells, and one or more bricks are electrically coupled together to form sheets of battery cells. In various embodiments, battery pack **252** includes of a plurality of sheets. Within battery pack **252**, the plurality of battery cells are coupled so that each of a first terminal of each of battery cells **255** is electrically coupled to a first output terminal **253** of battery pack **252**, and a each of a second terminal of each of battery cells **255** is electrically coupled to a second output terminal **254** of battery pack **252**. Individual battery cells **255** can be coupled within battery pack **252** in various combinations of series and parallel connections, depending on the desired output voltage and desired current requirements of battery pack **252**.

In various embodiments, battery pack **252** is mechanically coupled to heating/cooling system **270**, In various embodiments, heating/cooling system **270** is operable to heat and to cool a fluid that is circulated through battery pack **252** in order to control the temperature within battery pack **252**. In various embodiments, battery pack **252** includes a network of tubing **299** in thermal contact with one or more of the plurality of battery cells **255**. In various embodiments, tubing **299** is in thermal contact with each of the plurality of battery cells **255** within battery pack **252**. Tubing **299** is formed of a material, such as a metal, that allows thermal transmission between the battery cells **255** and the tubing **299**. When a fluid is circulated through tubing **299**, the fluid is operable to conduct heat to or away from the plurality of battery cells **255**, depending on the temperature of the fluid circulating in tubing **299**. The fluid is not limited to any particular type of fluid, and may include any type of fluid operable to circulate through tubing **299** and transfer heat to and away from battery cells **255**. In various embodiments, the fluid has a low freezing temperature wherein the fluid consist of a water and glycol mixture similar to that used as an anti-freeze in a typical automobile radiator.

In various embodiments, heating/cooling system **270** includes a reservoir **273** for holding a quantity of fluid and coupled through tubes **271** and **272** to the one or more networks of tubing **299** within battery pack **252**. In various embodiments, heating/cooling system **270** includes heater **277** operable to heat the fluid circulated by pump **274** though tubes **271**, **272** and tubing **299**. Heater **277** not limited to any particular type of heater. In various embodiments, heater **277** is a resistive type heating element operable to produce heat when electrical energy is provided to heater **277** through electrical connections **295** and **296**. Heater **277** is not limited to being located in any particular location. Heater **277** may be located in any location that allows heater **277** to heat the fluid in heating/cooling system **270** being circulated through tubing **299**. In various embodiments, heater **277** is located in reservoir **273**. In various embodiments, heater **277** is located in line in one of tubes **271**, **272**, and tubing **299**.

In various embodiments, heating/cooling system **270** includes a cooling system **278** for cooling the temperature of the fluid in reservoir **273** and circulating the fluid through tubing **299**. The cooling system **278** is not limited to any particular type of cooling system, and in some embodiments includes a compressor and an a separate refrigeration system for cooling the fluid.

In various embodiments, heating/cooling system includes sensors **276**. Sensors **276** are operable to sense one or more parameters associated with heating/cooling system **270**, including a temperature of the fluid in reservoir **273**, or the fluid temperature as it is circulated to or from battery pack **252**, and a rate or a volume of flow of the fluid as it is circulated through battery pack **252**. In various embodiments, one or more of sensors **276** are operable to sense a temperature of heater **277**. In some embodiments, the sensor is operable to provide an output signal to the EVM system **260** indicating a temperature of heater **277**. In various embodiments where the temperature of the heater **277** is provided to EVM system **260**, EVM system **260** is operable to disconnect electrical power from heater **277** if the temperature of heater **277** exceeds a given temperature.

In various embodiments, charging of battery pack **252** is only enabled when battery pack **252** is within a given range of temperatures. In various embodiments, when battery pack **252** is not within a temperature range designated as an allowable temperature for charging operations on battery pack **252**, charging control circuit **262** is operable to provide control **275** with control signals in order to have heating/cooling system **270** circulate heated or cooled fluid through tubing **299** within battery pack **252** in order to adjust the temperature of battery pack **252** to a temperature that is acceptable be for initiating, or continuing with, a charging operation of battery pack **252**. In various embodiments, sensors **251** within battery pack **252** are used to determine the temperature within battery pack **252**.

In various embodiments, sensors **251** are operable to sense other conditions within battery pack **252** that determine whether or not a charging operation can be initiated or continued if a charging operation is already in progress, on battery pack **252**. In various embodiments, sensors **251** determine a level of humidity within battery pack **252**, and a dew point of ambient air in or surrounding the battery pack **252**. In various embodiments, based in the temperature, humidity, and dew points sensed, a determination is made to operate heating/cooling system **270** in order to change the temperature, and in some instances the humidity, within battery pack **252** before a charging operation is initiated, or during the charging operation. In some instances, a thermal response in battery cells **255** to the charging operation, which could lead

to moisture condensation within battery pack **252**, triggers heating/cooling system **270** to make a temperature adjustment within battery pack **252**, either before or during the charging operation, or both before and during the charging operation.

In various embodiments, sensors **251** include smoke detectors operable to detect the presence of smoke within battery pack **252**. In various embodiments, detection of smoke within battery pack **252** results in a signal being provided to charging control circuit **262** operable to cause charging control circuit **262** to terminate a charging operation of battery pack **252** by disconnecting any voltage source providing a charge voltage to battery pack **252** from line source **212**. In various embodiments, one or more signals from sensors **251** or **276**, or a combination of signals from these sensors, are used to set fault conditions, or provide a status for various indications in system **200**. By way of illustration, a signal from sensors **251** indicating the detection of smoke may be transmitted to charging station **310** and results in one of indicators **227**A-**227**N visually indicating a smoke detection fault. In various embodiments, the status signals are provided through interconnect **242** and **242** of connection **220**.

In various embodiments, charging control circuit **262** is operable to determine a voltage level provided from line source **212** through connection **220**. In various embodiments, the determined voltage level is a peak-to-peak voltage of a sinusoidal voltage waveform providing the electrical power from line source **212**. In various embodiments, the determined voltage level is a peak voltage a sinusoidal voltage waveform providing the electrical power from line source **212**. By way of illustration, for a line source including a single phase alternating current having a nominal voltage of approximately 220 volts, the power source would have a peak-to peak voltage of approximately 311 volts and a peak voltage of half the peak-to-peak voltage, or approximately 155 volts. Based on the determined voltage level provided from line source **212**, comparator circuit determines a line voltage offset value. The line voltage offset value can be either a higher or a lower value than the determined voltage level provided from line source **212**. by adding an offset value to the determined voltage level from the line source. The offset value may be a negative value, a positive value, or zero. In instances where the offset value is negative, adding the offset value to the determined voltage level from the line source results in a line voltage offset value less than the determined voltage level from the line source. In instances where the offset value is positive, adding the offset value to the determined voltage level from the line source results in a line voltage offset value greater than the determined voltage value from the line source. In instances where the offset value is zero, adding the offset value to the determined voltage level from the line source results in a line voltage offset value being the same as the determined voltage value from the line source.

FIG. **6**A shows diagrams **750**, **751**, and **752**. Each of diagrams **750**, **751**, and **752** illustrate a comparison of the determined voltage level from the line source **704** to a line voltage offset value **706**. In diagram **750**, the offset value **708** is negative, and when added to the voltage level **704** results in a line voltage offset value **706** that is less than the determined voltage level from the line source **704**. In diagram **751**, the offset value **708** is positive, and when added to the voltage level **704** results in a line voltage offset value **706** that is greater than the determined voltage level from the line source **704**. In diagram **752**, the offset value **708** is zero, and when added to the voltage level **704** results in a line voltage offset value **706** that is equal to the determined voltage level from the line source **704**.

In various embodiments, charging control circuit **262** is operable to determine a voltage level present between the first terminal **253** and the second terminal **254** of battery pack **252** as provided by the battery cells **255** within battery pack **252**. In various embodiments, charging control circuit **262** includes comparator circuit **263**. Comparator circuit **263** is operable to compare the voltage level determined from the line source **212** and the voltage level provided across the terminal **253** and **254** of battery pack **252**, and to provide an output signal if the voltage level at terminals **253** and **254** is less than the calculated value of the line voltage offset value. Referring again to FIG. **6**A, in each of diagrams **750**, **751**, and **752**, arrow **710** represents values for the voltage level across terminals **253** and **254** that are less than the calculated line voltage offset value **706**, and arrow **712** represents values for the voltage level across terminals **253** and **254** are equal to are grater than the calculated line voltage offset value **706**. Upon initiation of a charging operation of battery pack **252**, for any voltage levels across terminals **253** and **254** that falls within the range represented by arrow **710**, comparator circuit **263** is operable to provide an output signal indicating the a heating element is to be included in the charging circuit when charging is initiated. In various embodiments, the heating element will remain in the charging circuit until comparator circuit **263** has determined that the heating element is to be bypassed in the charging circuit, as described herein.

In various embodiments, during a charging operation in which the heating element is included in the charging circuit, comparator circuit **263** is operable to compare the voltage level determined from the line source **212** and the voltage level provided across the terminals **253** and **254** of battery pack **252**, and to provide an output signal if the voltage level at terminals **253** and **254** is less than the calculated value of a bypass threshold value voltage offset value.

FIG. **6**B shows diagrams **760**, **761**, and **762**. Each of diagrams **760**, **761**, and **762** illustrate a comparison of the determined voltage level from the line source **704** to a line voltage offset value **706**, and a calculated voltage level **806** representing a bypass threshold value. In diagram **760**, the offset value **708** is negative, and when added to the voltage level **704** results in a line voltage offset value **706** that is less than the determined voltage level from the line source **704**. Bypass threshold value **806** is calculated by adding a value **808** to the line voltage offset value **706**. In diagram **761**, the offset value **708** is positive, and when added to the voltage level **704** results in a line voltage offset value **706** that is greater than the determined voltage level from the line source **704**. Bypass threshold value **806** is calculated by adding a value **808** to the line voltage offset value **706**. In diagram **762**, the offset value **708** is zero, and when added to the voltage level **704** results in a line voltage offset value **706** that is equal to the determined voltage level from the line source **704**. Bypass threshold value **806** is calculated by adding a value **808** to the line voltage offset value **706**.

Referring again to FIG. **6**B, in each of diagrams **760**, **761**, and **762**, arrow **810** represents values for the voltage level across terminals **253** and **254** that are less than the bypass threshold value **806**, and arrow **812** represents values for the voltage level across terminals **253** and **254** are equal to or greater than the bypass threshold value **806**. During charging operation including the heating element, when the monitored voltage level across terminals **253** and **254** remains in the range of values for arrow **810**, the heating element will remain in the charging circuit. For any of the voltage levels across terminals **253** and **254** represented by arrow **820**, the heating elements will be bypassed in the charging circuit. In instances where the heating element is included in a charging circuit

and the voltage level across terminals **253** and **254** increases from a range represented by arrow **810** up to the bypass threshold value **806**, charging control circuit **262** is operable to bypass the heating element, and to continue charging the battery pack **252** with the heating element bypassed, as represented by arrow **812**, and as further described herein.

By providing a line voltage offset value at a first voltage level wherein the heating element is included in the charging circuit when the battery pack voltage is less than the line voltage offset value, and by providing a bypass threshold value at a second and higher voltage level from the line voltage offset value, the bypass threshold value being a level wherein the heating element is removed from the charging circuit, the charging circuit includes a hysteresis band to control when to use the heating element included in the charging circuit upon initiation of a charging operation can be removed from the charging circuit.

Upon initiation of a charging operation of battery pack **252**, for any voltage levels across terminals **253** and **254** that falls within the range represented by arrow **710**, comparator circuit **263** is operable to provide an output signal indicating the a heating element is to be included in the charging circuit when charging is initiated. In various embodiments, the heating element will remain in the charging circuit until comparator circuit **263** has determined that the heating element is to be bypassed in the charging circuit, as described herein.

In each of diagrams **760**, **761**, and **762**, the bypass threshold value is higher then the line voltage offset value by a value range **808**. Value range **808** represents a hysteresis band.

In operation, charging control circuit **262** receives the output signal from comparator circuit **263**, and is operable to configure switching circuit **264** so as to include a the heating element as a voltage divider in the charging circuit used in the charging operation of battery pack **252**. Having a series heating element in the charging circuit provides a voltage divider circuit for reducing the voltage applied to battery pack **252** by either dropping the line voltage provided to the inputs of the power supply providing the charging voltage, or by dropping the charging voltage provided by the power supply to the battery pack across the heating element. The voltage divider circuit, including the heating element, allows charging control circuit **262** to properly control the charging current provided to battery pack **252** when the difference between the determined voltage level of line source **212** and the terminal voltage level present at battery pack **252** exceeds the predetermined difference threshold voltage level.

In various embodiments, the heating element used in the charging circuit is heater **277**. In various embodiments, the heating element is any electrically resistive conductive path that is operable to be used in a voltage divider circuit in a charging operation. In various embodiments, the heating element is a heating element used to heat an air flow circulated in a passenger compartment of electric vehicle **250**. In various embodiments, the heating element uses a resistive element used to provide heat for defrosting a windshield of electric vehicle **250**. In various embodiments, an electric fan is used to circulate the air past the heating element whenever the resistive heating element is used in a series circuit in the charging operation. In various embodiment, the heating element used is one or more of the resistive heating elements used to heat the passenger seats of electrical vehicle **250**.

In various embodiments, switching circuit **264** is operable to provide a voltage source to terminals **253** and **254** that includes heater **277** coupled in series with terminals **253** and **254** and coupled across the voltage source provided by charging control circuit **262**. Switching circuit **264** is also operable to bypass heater **277**, and to couple the voltage source provided by charging control circuit **262** to terminals **253** and **254** without including heater **277**. When heater **277** is included in series with the terminals of battery pack **252**, heater **277** provides a voltage divider circuit with battery pack **252**, wherein a portion of the voltage provided by the voltage source is dropped across heater **277**, and the remainder of the voltage provided by voltage source is applied across terminals **253** and **254** to charge the battery cells **255** in battery pack **252**. When heater **277** is bypassed, the entire voltage, less any loss in the connections **292**, and **293**, is applied to terminals **253** and **254** for use in charging the battery cells **255** within battery pack **252**.

FIG. **2**B shows a charging circuit **290** according to various embodiments of the present subject matter. The same reference numbers are used in FIG. **2**B to depict corresponding elements as depicted in FIG. **2**A. FIG. **2**B includes switching circuit **264**, power supply **261**, and battery pack **252**. A first output of power supply **261** is coupled to terminal **253** of battery pack **252** through connection **292**, and a second output of power supply **261** is coupled to terminal **254** of battery pack **252** through connection **293**. Power supply **261** is operable to provide a voltage source at its first and second outputs for use in charging battery pack **252**. Power supply **261** receives electrical power through connections **240**C and **240**D, and is operable to use the received electrical power to provide the voltage source for charging battery pack **252**. Connection **240**C and **240**D are coupled to connection **240**A and **240**B respectively through switching circuit **264**.

In various embodiments, interconnects **240**A and **240**B couple to interconnects **240** of connection **220**, and provide the electrical power from line source **212** (as shown in FIG. **2**A) to switching circuit **264**. Switching circuit **264** is operable to connect or disconnect electrical power provided at connections **240**A and **240**B to power supply **261**, and to include or not include heater **277** in the coupling between connections **240**A, **240**B, and power supply **261**. As shown in FIG. **2**B, connection **240**A is coupled to switch **265**A, and connection **240**B is couple to switch **265**B. Switch **265**B is coupled directly to connection **240**D, and when switch **265**B is closed connection **240**B is electrically coupled to connection **240**D. Switch **265**A is coupled to node **268**, which is coupled to both switch **266**A and switch **267**. Switch **267** is coupled to node **269**, which is coupled to switch **266**B and connection **240**C. When closed, switch **267** electrically couples switch **265**A to connection **240**C.

Switch **266**A is coupled to connection **295**, and switch **266**B is coupled to connection **296**. Heater **277** is coupled to switching circuit **264** through connection **295**, through switch **297**, and connection **298** at one end of heater **277**, and connection **296** at second end of heater **277**. The heating element in FIG. **2**B is not limited to heater **277** of FIG. **2**A, and may include any heating element operable to provide a voltage divider in charging circuit **290**. Charging control circuit **262** is coupled to switching circuit **264**, and is operable to control each of switches **265**A and **265**B, **266**A and **266**B, and **267** included in switching circuit **264**.

Charging control circuit **262** is operable to control whether switches **265**A and **265***b* are open or closed. In various embodiments, charging control circuit **262** operates switches **265**A and **265**B together to either connect or to disconnect electrical power provided on connections **240**A and **240**B to power supply **261**. In addition, charging control circuit **262** is operable to control whether switches **266**A, **266**B and **267** are open or closed in various combinations and at different times, in order to include heater **277** in the charging circuit **290**, or to bypass heater **277** and to couple connections **240**A and **240**B to power supply **261** without including heater **277**.

In various embodiments, where heater **277** is included in the charging circuit, charging control circuit **262** will operate to close both switches **266**A and **266**B and to open switch **267**. Under these conditions, node **268** will be coupled to connection **295** through switch **266**A, and node **269** will be coupled through switch **266**B to node **269**. In this configuration, when switches **265**A and **265**B are closed, heater **277** will be coupled in series with the power supply **261** with respect to the electrical power provided at connection **240**A and **240**B, forming a voltage divider circuit for electrical power provided to the inputs of power sully **26**.

When charging of the battery pack **252** is to occur with the heating element bypassed in the charging circuit, charging control circuit **262** will operate to open both switches **266**A and **266**B and to close switch **267**. Under these conditions, node **268** will not be coupled to connection **295** through switch **266**A, and node **269** will not be coupled through switch **266**B to connection **296**. Instead, node **268** will be coupled through switch **267** to node **269**. In this configuration, when switches **265**A and **265**B are closed, heater **277** will by bypassed, and connection **240**A will be coupled directly through switch **265**A to connection **240**C. In this configuration with the heating element bypassed, and when switched **265**A and **265**B are closed, power supply **261** will be provided approximately the same voltage as supplied to connection **240**A and **240**B.

In various embodiments, when a charging operation is underway including heater **277** coupled in the charging circuit, and a determination is made to bypass heater **277**, switches **265**A and **265**B are first actuated to open these switches so as to disconnect the power supply **261** from the battery pack **252**, then switches **266**A, **266**B, and **267** are configured to bypass heater **277** by opening switches **266**A and **266**B and closing switch **267**. Once switches **266**A, **266**B and **267** are set so as to bypass heater **277**, switches **265**A and **265**B are then closed to re-connect power supply **261** to battery pack **252** with the heater **277** now bypassed in the charging circuit.

Charging control circuit **262** is operable to include or bypass heater **277** in a charging circuit based on output signals provided by comparator circuit **263**, as descried herein. By providing heater **277** in series with the line voltage being supplied to power supply **261**, the input voltage level applied to the inputs of power supply **261** are reduced over the voltage levels present on connections **240**A and **240**B, and thus allows power supply **261** to maintain proper current regulation for charging battery pack **252**. In various embodiments, as the voltage level of battery pack **252** is increased through the charging process, the voltage divider provided by heater **277** is no longer required, and heater **277** is bypassed to allow the voltage level present on connectors **240**A and **240**B to be provided to the inputs of power supply **261**. In various embodiments, charging control circuit **263** is operable to regulate the voltage across the heater **277** by controlling the current flow through heater **277**. In various embodiments, the voltage drop across heater **277** is approximately one half the voltage of the line source being provided to the powers supply **261**. In various embodiments, when alternating current power is being provided from the line source power and the heater is included in the charging circuit, charger control circuit is operable to energize the charging circuit for one or more cycles of the alternating current power, and to disconnect the alternating current power from the charging circuit **262** for one or more cycles of the alternating current power, repeating this pattern a plurality of times in order to regulate the temperature of heater **277**. In embodiments where direct current power is being provided as the line source power and the heater **277** is included in the charging circuit, the charger control circuit **262** is operable to switch the direct current power on and off in order to regulate the temperature of heater **277**

In various embodiments, heater **277** is protected from overheating conditions by switch **297**, by sensor **256**, or by a combination of both switch **297** and sensor **256**. In various embodiments, switch **297** is a switch that is opened and closed depending on a temperature of the switch, such as but not limited to a bimetallic type switch. In various embodiments, switch **297** is operable to remain closed, and thus couple heater **277** to connections **295** and **296**, when heater **277** is below a certain temperature, and to open when a given temperature at heater **277** is exceeded. Opening switch **297** disconnects any electrical power from having a path through heater **277**, and thus is operable to prevent an overheating condition at heater **277**. In various embodiments, sensor **256** is operable to sense a temperature at heater **277**, and to provide a temperature signal related to the temperature of heater **277** to charging control circuit **262** through connection **257**. In various embodiments, charging control circuit **262** is operable to open switch **297** based on a temperature signal from sensor **256**, and thus to disconnect any electric power from having an electrical path through heater **277**. In various embodiments, when switch **297** is opened during a charging cooperation, charging control circuit **262** is operable to detect that current is not being provided to power supply **261** through connections **240**C and **240**D, and to generate a charging fault condition signal.

The configuration of switches as depicted in FIG. **2**B is not intended to be limiting, and is intended to show one possible arrangement of switches that could be used in switching circuit **264** to correspond with the switching functions as described herein. It would be understood that other arrangements of switches, including arrangements having a different number of switches as illustrated in FIG. **2**B, could be used to perform the switching functions as described herein. Switches **265**A, **265**B, **266**A, **266**B and **267**, or any switches that are included in switching circuit **264** to perform the switching function described herein, are not limited to any particular type or types of switches. Any type switches, including but not limited to mechanical relays, solid state relays, and solid state devices such as switching transistors, may be used in various embodiments and in any combinations that provide the switching functions as described herein.

FIG. **2**C shows a charging circuit **290**A according to various embodiments of the present subject matter. The same reference numbers are used in FIG. **2**B to depict corresponding elements as depicted in FIG. **2**A. FIG. **2**C includes power supply **261** coupled to battery pack **252** through switching circuit **264**. Various embodiments of charging circuit **290**A operate switching circuit **264** as described above with respect to FIG. **2**B, except that the switch circuit **264** and heater **277** are coupled to form a voltage divider circuit with the output voltage provided as an output from power supply **261**. In FIG. **2**C, when heater **277** is electrically coupled into charging circuit **290**A, the output voltage from power supply **261** is divided between heater **277** and the battery pack **252**. When heater **277** is bypassed in charging circuit **290**A, the voltage output from power supply **261** is applied to battery pack **252**.

Referring to FIGS. **2**A and **2**B, and while a charging operation is being performed on the battery pack **252**, having heater **277** included in series with battery pack **252** will produce some heat based on the amount of voltage across and the amount of current through heater **277**. In various embodiments, heating/cooling system **270** will function to control and prevent overheating of both heater **277** and battery pack

252. In various embodiments, sensors 276 will monitor the temperature of heater 277, or of the fluid circulating in the heating/cooling system, or both, and will determine if cooling needs to be applied. In various embodiments, control 275 will turn on fluid circulation when heater 277 is included in the charging circuit. If the temperature of the heater 277 or of the fluid in the heating/cooling system 270 exceeds a pre-determined level, heating/cooling system 270 is operable to cool the fluid to prevent overheating. In various embodiments, control 275 is operable to provide a signal over connections 294 to charging control circuit 262 to indicate that the temperate of heater 277 or of the fluid circulating in heating/cooling system cannot be maintained below a level deemed to be acceptable for battery recharging, and to remove the heater 277 from the charging circuitry. In such instances, if charging of the battery pack 252 can not be performed without the voltage drop provided by heater 277, the charging operation will be terminated until a temperate change at the battery pack 252 allows initiation of the charging operation.

In various embodiments, sensors 251 in battery pack 252 monitor one or more conditions within battery pack 252, and provides output signals though connection 291 to EVM system 260. In various embodiments, one or more of sensors 251 provides a signal representative of one or more temperatures within battery pack 252. In various embodiments, EVM system 260 determines that the temperature within one or more portions of battery pack 252 exceeds a level deemed to be appropriate for a charging operation. In such instances, if the heater 277 is included in the circuit being used to charge the battery pack, heater 277 is removed from the charging circuit. The charging operation will only continue on the battery pack if charging control circuit determines that a charging operation of the battery pack 252 can be performed without including heater 277 in the charging circuit. In various embodiments, an alternative heating element can be used, wherein heater 277 can be removed from the charging circuit, and a different heating element as described herein, such as a heating element associated with the HVAC system, is coupled in the charging circuit in order to continued with the recharging operations without further heating the battery pack 252.

In various embodiments, EVM system 260 includes one or more current control mechanism to provide a voltage at a controlled level of current to the charging circuit 290 and across first terminal 253 and second terminal 254 in order to perform the charging of battery pack 252 with a controlled current.

FIG. 3 shows a charger station 300 according to various embodiments of the present subject matter. Charger station 300 is not limited to any particular type of charging station. In various embodiments, charger station 300 is charger station 210 as shown in FIG. 2A. Charger station 300 includes an enclosure 302 coupled to a line source 301 through a connection 310. In various embodiments, connection 310 includes a conduit for electrical conductors, and the electrical conductors to couple electrical power from the line source 301 into enclosure 302. In various embodiments, enclosure 302 is operable to be mounted on a wall or other surface of a building structure, and to couple to connection 310 through an opening 312 in a rear side of enclosure 302.

In various embodiments, charger station 300 includes a power and control circuit 304 within enclosure 302 and a connection including cable 352 exiting from enclosure 302 and terminating in a connector 353. Charger station 300 is operable to couple incoming electrical power received from line source 301 through power and control circuit 304 to cable 352 so that the electrical power can be coupled to a plurality of terminals 355 included in connector 353. Power and control circuit 304 is operable to connect and to disconnect the electrical power received from line source 301 to and from cable 352 and connector 353. In various embodiments, enclosure 302 includes a surface 320 including a ON/OFF switch 308. ON/OFF switch 308 is operable to control the coupling of electrical power from line source 301 to cable 352. In various embodiments, when ON/OFF switch 308 is in the "OFF" position, the path for electrical power from line source 301 to cable 352 is physically disconnected. In various embodiments, when ON/OFF switch 308 is in the "ON" position, electrical power will be coupled from line source 301 to cable 352 only if all the other conditions in charger station 300 allow such a coupling.

In various embodiments, enclosure 302 includes a protective device, such as a circuit breaker 306, mounded on the surface 320. Circuit breaker 306 is operable to disconnect an electrical path between the line source 301 and cable 352 when the circuit breaker 306 is in the OFF position, and to reconnect the electrical path between line source 301 and cable 352 when the circuit breaker is in the ON position,

In various embodiments, cable 352, in addition to one or more conductors coupled to terminals 355 and used to carry electrical power, includes one or more separate conductors to carry communication and control signals to and from power and control circuit 304 over cable 352. In various embodiments, the additional conductors carry communication and control signals received at and provided from power and control circuit 304. In various embodiments, the communication and control signals are used to determine a status for one or more indicators 322, 324, 326, 328, and 330 included on surface 320. In various embodiments, indicators 322, 324, 326, 328, and 230 are visual indicators, such as but not limited to indicator lamps or light emitting diodes. The type of information indicated by indicators 322, 324, 326, 328, and 330 is not limited to any particular type of information, and in various embodiments, includes one or more of a "READY," a "GROUND FAULT," a "SMOKE DETECTED," A "CABLE STRAIN," and a "CHARGING FAULT" indication. In various embodiments, charger station 300 includes a audio output device 332, such as but not limited to a speaker or a beeper, operable to provided one or more audio outputs for indicating information. In various embodiments, a reset switch 340 is included on surface 320. In various embodiments, reset switch 340 is a ground fault interrupt circuit operable to provide an indication that a ground fault has occurred, for instance by actuating the reset switch to a fault position, and to allow resetting of the ground fault by actuating reset switch 340. In various embodiments, reset switch 340 provides a fault input to power and control circuitry 304 in order to generate a fault condition that removes any electrical power provided from line source 301 from cable 352

In various embodiments, charger station 300 includes a holster 357 operable for retaining connector 353 so as to provide a place to physical hold connector 353 when cable 352 and connector 353 are not physically coupled to an electric vehicle for which the charging station is designed to couple to during charging operations.

In various embodiments, cable 352 exits enclosure 302 through a device 350 such as a cord grip, wherein device 350 protects cable 352 from cut or puncture damage from any edges of enclosure 302, and provides strain relief for cable 352 against pulling or flexing forces applied to cable 352. In various embodiments, wire grip 351 is included over cable 352 and attached to device 350. Wire grip 351 is operable to provide physical protection to cable 352 and to provide further protection against pulling and flexing forces applied to cable 352. In various embodiments, a sensor 356 is included

in enclosure **302**. Sensor **356** is operable to sense a level of physical strain being applied to cable **352**, and to provide a signal to power and control circuit **304**, the signal including information related to the level of stain on cable **352**. In various embodiments, based on the sensed physical strain placed on cable **352**, power and control circuit **304** is operable to disconnect the electrical path coupling line source **301** with cable **352**. This feature is a safety feature that aids in preventing electrical power from being applied to cable **352** after cable **352** may have been damaged as a result of the physical strain.

In various embodiments, connector **353** includes one or more coupling mechanisms **354**. Coupling mechanisms **354** provide a mechanism for mechanically latching connector **353** into any mating connector (not shown in FIG. **3**) that connector **353** is intended to couple to. In various embodiments, coupling mechanisms **354** prevent connector **353** from being physically disconnected from a mating connector by merely pulling on cable **352**, and require some type of actuation be performed on coupling mechanisms **354** in order to remove connector **353** from a mating connector. In various embodiments, coupling mechanisms **354** can not be actuated if electrical power is provided to terminals **355**, and requires the electrical power be removed from at least terminals **355** in order to actuate coupling mechanisms **354** and disconnecting connector **353** from a mating connector.

FIG. **4**A shows a graph **400** including a voltage waveform **410** and voltage waveform **430** according to various embodiments of the present subject matter. In various embodiments, voltage waveform **410** is a voltage waveform of the electrical power received from a line source, such as line source **212** in FIG. **2**, or from line source **301** in FIG. **3**. In various embodiments, voltage waveform **410** is the voltage waveform provided to a power supply such as power supply **261** used in a charring operation when the heater is not included in the charging circuit, and waveform **430** is the voltage waveform provided to a the power supply used in the charging operation when the heater is included in the charging circuit. In various embodiments, waveform **430** is derived from voltage waveform **410** by applying voltage waveform **410** to a voltage divider circuit formed using a heating element and a power supply used to provide the charge voltage during a charging operation.

Referring again to FIG. **4**A, graph **400** includes a vertical axis **402** depicting voltage, and a horizontal axis depicting time. Voltage waveform **410** depicts a variation in voltage over time. Voltage waveform **430** depicts a different variation in voltage over time. In various embodiments, voltage waveform **410** is a sinusoidal waveform having a period **418**. A period refers to the time period for the sinusoidal waveform to complete one cycle (360 degrees). In various embodiments, period **418** is equal to the inverse of the frequency of the voltage waveform as provided in a commercially available electrical power source. In various embodiments, period **418** is a time period representative of voltage waveform having a frequency of 60 hertz. In various embodiments, period **418** varies for any particular portion of waveform **410** based on a power factor correction (PFC) applied by the entity providing the commercially available electrical power from which voltage waveform **410** is derived.

In various embodiments, waveform **410** includes a peak-to-peak voltage level **412**. In various embodiments, waveform **410** includes voltage levels relative to a given voltage level represented by line **420**. In various embodiments, line **420** represents a voltage level of zero volts relative to a ground, and waveform **410** oscillates above and below the voltage level represented by line **420**. The voltage represented by voltage **414** is referred to a peak voltage for waveform **210**. In various embodiments, line **422** represents an equivalent direct current (DC) value for a sinusoidal voltage represented by waveform **410**, often expressed as a root mean square (RMS) value of the peak voltage **414**. The value of the voltage at line **422** is sometimes referred to at the nominal voltage level for a voltage waveform. Voltage level **414** is determined to be a values of a different between a voltage level at line **422** and a peak voltage level of voltage waveform **410**. The value of the voltage at line **422** is determined by dividing a value of voltage level **414** by the square root of 2. In various embodiments, any one of the peak-to-peak voltages **412**, peak voltage **414**, and nominal voltage at line **422** may be used as the determined voltage level for the line source provided to the comparator circuit in order to determine if a heating elements should be included in the charging circuit used during a charging operation. In various embodiments, for a given waveform **410**, different values for the pre-determined difference threshold to be compared to the battery pack voltage depending on which one of the peak-to-peak, peak, or nominal voltage levels is used as the determined voltage level for the line source.

In various embodiments, waveform **430** has a same period **418**, a same phase as waveform **410**, and is references to a same voltage line **422** as waveform **410**, but has a smaller amplitude, wherein the peak-to-peak voltage **432** of voltage waveform **430** is less than the peak-to-peak voltage **412** for waveform **4101**, and wherein a peak voltage **434** for voltage waveform **430** is less then the peak voltage **412** for waveform **410**. In various embodiments, voltage waveform **430** is generated by providing voltage waveform **410** to a charging circuit including the heater in the electrical path of the charging circuit, wherein the heater acts as a voltage divider to provide waveform **430** at the inputs to a power supply used in charging a battery pack. In various embodiments, voltage waveforms **410** and **430** represent voltage waveforms for input electrical power provided at separate times to a power supply used to recharge a battery pack. Voltage waveform **410** represent a voltage waveform for electrical power provided to the power supply when the heater is bypassed in the charging circuit, and voltage waveform **430** represents a voltage waveform for electrical power provided to the power supply when the heater is electrically coupled in the charging circuit.

By proving a reduced amplitude voltage waveform to the power supply, the power supply is able to properly control the current used to charge the battery pack when the battery pack voltage level is low and the difference between the battery pack voltage and the peak-to-peak voltage of the line source used in the charging circuit exceeds a pre-determined value, such as the line voltage offset value, as described herein.

FIG. **4**B shows a graph **450** of a voltage level for a battery pack during a charging operation according to various embodiments of the present subject matter. Graph **450** includes a vertical axis **452** representing a voltage level of a rechargeable battery pack, and a horizontal axis **454** representing time. In various embodiments, the voltage level depicted in graph **450** is the voltage level the battery pack **104** of FIG. **1**. In various embodiments, the voltage level depicted in graph **450** is the voltage level of the battery pack **252** of FIG. **2**A.

Referring again to FIG. **4**B, a voltage level **480** is present at the battery pack during time period **460**. At time **470**, a charging operation of the battery pack is initiated. At time **470**, a voltage level **480** is compared to a line voltage offset value represented by line **498**, and represents a determined voltage level for the line source of the electrical power to be used in charging the battery pack. Since voltage **480** is less than the

line voltage offset value, charging of the battery pack will be initialed at time **470** to include using a heating element in series with the line source and a set of power inputs to the power supply generating the charging voltage in the charging operation.

During time period **462**, the charging operation including coupling the heating element in series with the line source, and the voltage level present at the battery pack increases from voltage level **480** to voltage level **481**, as shown by upward slope **482**. At time **472**, the voltage present at the battery pack has reached voltage level **481**, which is the bypass threshold value calculated based on the line voltage offset value of line **498**.

During time period **464** between time **472** and time **474**, charging of the battery pack is changed over so that the heating element is bypassed, and the line source is coupled directly to the power inputs of the power supply without having the heating element in series with the line source.

The bypassing of the heating element occurs during time period **464**, beginning at time **472** and ending at time **474**. At time **474**, charging of the battery pack continues with the heating element bypassed in the charging circuit. Time period **466** includes a time period where charging operation continues with the heating element bypassed, charging the battery pack to a final charge voltage **488** at time **478**, as represented by slope **486**. The charging operation is terminated at time **478**. For some time after time **478**, the battery pack remains at a voltage level **488**.

A hysteresis band **492** includes a voltage range starting at voltage level **498** representing a calculated line voltage offset value, and extending to voltage level **481**, representing a bypass threshold value calculated based on the voltage offset value. Hysteresis band **492** represents a difference in a value for voltage level at the battery pack for which initiating a charging operation will include using the heater in the charging circuit, and the voltage level in the charging operation wherein the charging operation will switch over to charging with the heater bypassed.

The time periods illustrated in graph **450** are not necessarily proportional, and not necessarily to the same scale. Time period **460** represents any time period prior to the initiation of a charging operation. Time period **462** is not limited ay any particular time period. In various embodiments, time period **462** is a time period of between 2 and 3 hours. Time period **464** is not limited to any particular time period. In some embodiments, time period **464** is approximate 5 seconds. In some embodiments, time period **464** is less than one second. In some embodiments, time period **464** is less than 150 milliseconds.

Time period **466** is not limited to any particular time period. In various embodiments, time period **466** is between 2 and 4 hours. In some embodiments, time periods **466** is more than 4 hours. In some embodiments, time period **466** is less than 2 hours.

Time period **466** ends at time **478** when the a voltage level **488** is present at the battery pack. Voltage level **488** is not limited to any particular voltage level. In various embodiments, voltage level **488** is a predetermined voltage level associated with a particular charge level. In various embodiments, voltage level **488** represents a battery voltage level present on the battery pack when the battery pack is charged to approximately an 80% charge level. In various embodiments, the 80% charge level represents a battery voltage present on the battery pack and provided by the battery pack of approximately 405 volts DC.

In various embodiments, voltage level **488** represents a battery voltage level present at the battery pack when the battery is charged to approximately a 100% charge level. In various embodiments, the 100% charge level represents a voltage level present on the battery pack and provided by the battery pack of in a range of approximately 410-412 volts DC.

In various embodiments, a final voltage level to which the charging operation is to charge the battery pack to is less than a voltage level wherein the battery pack can be charged during a charging operation without using the heating element in the charging circuit. By way of illustration, a low level charge for a battery pack may be desirable as the final charge voltage for a battery pack when the battery pack is being stored, or when the when the vehicle in which the battery pack is installed is not going to be operated for some extended period of time. In such instances, a targeted voltage level for the battery pack at the conclusion of a charging operation may be low voltage level, such as a voltage level representative of a 50% charge level for the battery pack. The lower charge level may be referred to as a storage charge level.

In various embodiments, the storage charge level may be a voltage level that is below any volt level wherein the difference between the determined voltage for the line source voltage and the final charge level for the battery pack being charged to a storage charge level will always be greater than the pre-determined difference voltage level. In such instances, any charging of the battery pack up to the storage charge voltage level will be done by having the heating element included in the charging circuit. This is illustrated in graph **450** as the time period between time **470** and **479**, wherein a charging operation is initiated at time **470** including having the heating element included in the charging circuit. At time **479**, the voltage level at the battery pack has reached the storage charge voltage level, but the voltage level has not yet reached voltage level **481**. When charging a battery pack to the storage charge voltage level as illustrated in graph **450**, the charging operation is terminate at time **479**, wherein the entire charging operation has been performed with the heating element having been included in the charging circuit and without going through the switching operation to bypass the heating elements as shown for time period **464**.

FIG. **5** shows a flowchart **500** for one or more methods according to various embodiments of the present subject matter.

At block **510**, method **500** includes determining that a charge operation on a rechargeable battery pack is to be performed. In various embodiments, determining that a charge operation on a rechargeable battery pack is to be performed includes determining that the rechargeable battery pack is to be charged to one of a plurality of predetermined battery charge levels.

At block **520**, method **500** includes comparing a supply voltage to a battery voltage of the rechargeable battery pack to determine a value for a difference signal. In various embodiments, comparing a supply voltage to a battery voltage includes providing an output signal if the difference between the compared supply voltage and the battery voltage exceeds a pre-determined difference threshold value.

At block **530**, method **500** includes generating a charging voltage from the supply voltage. In various embodiments, generating a charging voltage from the supply voltage includes the supply voltage being an alternating current power source having a sinusoidal voltage waveform.

At block **540**, method **500** includes initiating charging of the rechargeable battery pack by coupling the charging voltage to the rechargeable battery pack. In various embodiments, block **540** includes block **550** if the difference between the compared supply voltage and the battery voltage exceeds the pre-determined voltage level, and includes block **560** if the

difference between the compared supply voltage and the battery voltages does not exceed the pre-determined voltage level. In various embodiments, initiating charging and charging of the rechargeable battery pack includes controlling a current provided during the charging both when the heating element is coupled between the voltage source and the rechargeable battery pack and when the heating element is bypassed.

At block **550**, method **500** includes coupling the charging voltage to the rechargeable battery pack including coupling a heating element between the charging voltage and the rechargeable battery pack when the value of the difference signal exceeds a predetermined voltage level.

At block **560**, method **500** includes comparing the supply voltage to the battery voltage while charging the rechargeable battery pack and having the heating element between the charging voltage and the rechargeable battery pack to determine the difference signal, and bypassing the heating element and continuing the charging when the difference signal is less than a predetermined bypass threshold level.

At block **570**, method **500** includes bypassing the heating element when the value of the difference signal does not exceed the predetermined voltage value, the heating element operable to heat a fluid circulated through the rechargeable battery pack.

At block **580** method **500** includes circulating the fluid through the rechargeable battery pack during the charging while the heating element is coupled between the charging voltage and the rechargeable battery pack. In various embodiments, block **570** further includes monitoring a temperature of rechargeable battery pack, and cooling the fluid circuited through the recharge battery pack when the monitored temperature exceeds a predetermined temperature level.

At block **590**, method **500** includes terminating the charging of the rechargeable battery pack when the voltage of the battery pack reaches a pre-determined voltage charge level. In various embodiments, reaching the pre-determined voltage charged level and terminating the charging occurs when the charging includes charging with the heating elements coupled between the charging voltage and the rechargeable battery pack. In various embodiments, reaching the pre-determined voltage charged level and terminating the charging occurs when charging includes charging the rechargeable battery pack with the heating elements is bypassed.

Embodiments of systems, methods, and apparatus for a battery charger have been described herein. Various embodiments include an apparatus comprising a rechargeable battery pack installed in an electric vehicle, the rechargeable battery pack coupled to a power supply, the power supply operable to provide a charge voltage to perform charging operations on the battery pack, a heating element to heat a fluid to be circulated through the rechargeable battery pack, the fluid thermally coupled to battery cells within the rechargeable battery pack, a comparator circuit to compare a battery voltage of the rechargeable battery pack to a line source voltage coupled to inputs of the power supply, the comparator circuit operable to compare the battery voltage to the line source voltage and to provide an output signal when the battery voltage is less than a line voltage offset value, the line voltage offset value calculated based on a value added to a determined voltage level for the line source voltage, and a control circuit coupled to receive the output signal of the comparator, and when a charge operation of the rechargeable battery pack is to be initiated, the control circuit is operable to couple the line source voltage to the power supply, wherein the control circuit is to couple the heating element in series between the line source voltage and the power supply when the comparator circuit is providing the output singal indicating that the battery voltage is less than the line voltage offset value, and to bypass the heating element if the comparator is not providing the output signal indicating that the battery voltage is less than the line voltage offset value.

Various embodiments include a method comprising determining that a charge operation on a rechargeable battery pack is to be performed, comparing a supply voltage to a battery voltage of the rechargeable battery pack to determine a line voltage offset value, generating a charging voltage from the supply voltage, and initiating charging of the rechargeable battery pack by coupling the charging voltage to the rechargeable battery pack, wherein coupling the charging voltage to the rechargeable battery pack includes coupling a heating element between the supply voltage and a set of power inputs to a power supply providing the charge voltage to the rechargeable battery pack when the battery voltage is less than a line voltage offset value, and bypassing the heating element when the battery voltage is not less than the line voltage offset value.

Various embodiments include a system comprising a vehicle including a rechargeable battery pack, the rechargeable battery pack to provide at least a portion of the power used to propel the vehicle, a heating element to heat a fluid to be circulated through the rechargeable battery pack, the fluid thermally coupled to battery cells within the rechargeable battery pack, a charger operable to couple to a line source of electrical power and to detachably coupled to the vehicle, the charger to provide electrical power from the line source for performing charging operations of the rechargeable battery pack, a comparator circuit to compare a battery voltage of the rechargeable battery pack to a line source voltage coupled to inputs of the power supply, the comparator circuit operable to compare the battery voltage to the line source voltage and to provide an output signal when the battery voltage is less than a line voltage offset value, the line voltage offset value calculated based on a value added to a determined voltage level for the line source voltage, and a control circuit coupled to receive the output signal of the comparator, and when a charge operation of the rechargeable battery pack is to be initiated, the control circuit is operable to couple the line source voltage to the power supply, wherein the control circuit is to couple the heating element in series between the line source voltage and the power supply when the comparator circuit is providing the output signal indicating that the battery voltage is less than the line voltage offset value, and to bypass the heating element if the comparator is not providing the output signal indicating that the battery voltage is less than the line voltage offset value.

The Abstract is provided to comply with 37 C.F.R. §1.72(b) to allow the reader to quickly ascertain the nature and gist of the technical disclosure. The Abstract is submitted with the understanding that it will not be used to interpret or limit the scope or meaning of the claims.

What is claimed is:

1. An apparatus comprising:

a rechargeable battery pack installed in an electric vehicle, the rechargeable battery pack coupled to a power supply, the power supply operable to provide a charge voltage to perform charging operations on the rechargeable battery pack;

a heating element to heat a fluid to be circulated through the rechargeable battery pack, the fluid thermally coupled to battery cells within the rechargeable battery pack;

a comparator circuit to compare a battery voltage of the rechargeable battery pack to a line source voltage coupled to inputs of the power supply, the comparator

circuit operable to compare the battery voltage to the line source voltage and to provide an output signal when the battery voltage is less than a line voltage offset value, the line voltage offset value calculated based on a value added to a determined voltage level for the line source voltage; and

a control circuit coupled to receive the output signal of the comparator, and when a charge operation of the rechargeable battery pack is to be initiated, the control circuit is operable to couple the line source voltage to the power supply, wherein the control circuit is to couple the heating element in series between the line source voltage and the power supply when the comparator circuit is providing the output signal indicating that the battery voltage is less than the line voltage offset value, and to bypass the heating element if the comparator is not providing the output signal indicating that the battery voltage is less than the line voltage offset value.

2. The apparatus of claim **1**, wherein the comparator circuit is operable to monitor the battery voltage while the rechargeable battery pack is coupled to the heating element and the voltage source during a recharging operation, and to provide a bypass signal when the battery voltage exceeds a bypass threshold value, wherein the bypass threshold value is calculated based on the line voltage offset value; and

wherein the control circuit is coupled to receive the bypass signal and to bypass the heating element and continue the charging operation.

3. The apparatus of claim **1**, wherein the control circuit is operable to charge the rechargeable battery pack to one of a plurality of predetermined battery charge levels.

4. The apparatus of claim **1**, wherein the heating element, when coupled between the voltage source and the rechargeable battery pack, is coupled in series with the rechargeable battery pack to form a voltage divider for a voltage provided from the voltage source.

5. The apparatus of claim **1**, further including:

a temperature sensor coupled to the control circuit, the temperature sensor operable to monitor a temperature of the rechargeable battery pack and to provide a temperature value of the rechargeable battery pack; and

a cooling system operable to cool the fluid if the temperature value exceeds a threshold temperature while the heating element coupled between the voltage source and the rechargeable battery pack and is heating the fluid.

6. The apparatus of claim **1**, wherein the control circuit is operable to control a current provided by the voltage source to the rechargeable battery pack both when the heating element is coupled between the voltage source and the rechargeable battery pack and when the heating element is bypassed.

7. The apparatus of claim **1**, wherein the heating element includes a conductive metal wire.

8. The apparatus of claim **1**, wherein the heating element is located inside a tubing network, the tubing network operable to contain the fluid as the fluid circulates through the rechargeable battery pack.

9. The apparatus of claim **1**, wherein the battery cells are a plurality of 18650 form-factor lithium-ion cell.

10. A method comprising:

determining that a charge operation on a rechargeable battery pack is to be performed;

comparing a supply voltage to a battery voltage of the rechargeable battery pack to determine a line voltage offset value;

generating a charging voltage from the supply voltage; and

initiating charging of the rechargeable battery pack by coupling the charging voltage to the rechargeable battery pack, wherein coupling the charging voltage to the rechargeable battery pack includes coupling a heating element between the supply voltage and a set of power inputs to a power supply providing the charge voltage to the rechargeable battery pack when the battery voltage is less than a line voltage offset value, and bypassing the heating element when the battery voltage is not less than the line voltage offset value.

11. The method of claim **10**, further including:

circulating the fluid through the rechargeable battery pack during the charging while the heating element is coupled between the supply voltage and the set of power inputs to the power supply.

12. The method of claim **11**, further including:

monitoring a temperature of rechargeable battery pack, and

cooling the fluid circulating through the rechargeable battery pack when the monitored temperature exceeds a predetermined temperature level.

13. The method of claim **10**, further including:

comparing the supply voltage to the battery voltage while charging the rechargeable battery pack and having the heating element between the supply voltage and a set of power inputs to a power supply to determine if the battery voltage exceeds a bypass threshold value, wherein the bypass threshold value is calculated based on the line voltage offset value; and bypassing the heating element and continuing the charging when the battery voltage exceeds the bypass threshold value.

14. The method of claim **10**, wherein determining that a charge operation on a rechargeable battery pack is to be performed includes determining that the rechargeable battery pack is to be charged to one of a plurality of predetermined battery charge levels.

15. The method of claim **10**, further including:

controlling a current provided during the charging operation, both when the heating element is coupled between the supply voltage and a set of power inputs and when the heating element is bypassed.

16. The method of claim **10**, wherein generating a charging voltage from the supply voltage includes the supply voltage being an alternating current power source having a sinusoidal voltage waveform.

17. A system comprising:

a vehicle including a rechargeable battery pack, the rechargeable battery pack to provide at least a portion of the power used to propel the vehicle;

a heating element to heat a fluid to be circulated through the rechargeable battery pack, the fluid thermally coupled to battery cells within the rechargeable battery pack;

a charger operable to couple to a line source of electrical power and to detachably coupled to the vehicle, the charger to provide electrical power from the line source for performing charging operations of the rechargeable battery pack;

a comparator circuit to compare a battery voltage of the rechargeable battery pack to a line source voltage coupled to inputs of the power supply, the comparator circuit operable to compare the battery voltage to the line source voltage and to provide an output signal when the battery voltage is less than a line voltage offset value, the line voltage offset value calculated based on a value added to a determined voltage level for the line source voltage; and

a control circuit coupled to receive the output signal of the comparator, and when a charge operation of the

rechargeable battery pack is to be initiated, the control circuit is operable to couple the line source voltage to the power supply, wherein the control circuit is to couple the heating element in series between the line source voltage and the power supply when the comparator circuit is providing the output signal indicating that the battery voltage is less than the line voltage offset value, and to bypass the heating element if the comparator is not providing the output signal indicating that the battery voltage is less than the line voltage offset value.

18. The system of claim **17**, wherein the comparator circuit is operable to monitor the battery voltage while the rechargeable battery pack is coupled to the heating element and the voltage source during a recharging operation, and to provide a bypass signal when the battery voltage exceeds a bypass threshold value, wherein the bypass threshold value is calculated based on the line voltage offset value; and

wherein the control circuit is coupled to receive the bypass signal and to bypass the heating element and continue the charging operation.

19. The system of claim **17**, wherein the control circuit is operable to charge the rechargeable battery pack to one of a plurality of predetermined battery charge levels.

20. The system of claim **17**, wherein the heating element, when coupled between the voltage source and the rechargeable battery pack, is coupled in series with the rechargeable battery pack to form a voltage divider for a voltage provided from the voltage source.

* * * * *