US007698078B2

(12) **United States Patent**
Kelty et al.

(10) **Patent No.: US 7,698,078 B2**
(45) **Date of Patent: *Apr. 13, 2010**

(54) **ELECTRIC VEHICLE COMMUNICATION INTERFACE**

(75) Inventors: **Kurt Kelty**, Palo Alto, CA (US); **Marc Tarpenning**, Woodside, CA (US); **Scott Kohn**, Menlo Park, CA (US)

(73) Assignee: **Tesla Motors, Inc.**, San Carlos, CA (US)

(*) Notice: Subject to any disclaimer, the term of this patent is extended or adjusted under 35 U.S.C. 154(b) by 21 days.

This patent is subject to a terminal disclaimer.

(21) Appl. No.: **11/779,678**

(22) Filed: **Jul. 18, 2007**

(65) **Prior Publication Data**

US 2009/0021385 A1 Jan. 22, 2009

Related U.S. Application Data

(63) Continuation-in-part of application No. 11/818,838, filed on Jun. 15, 2007.

(51) **Int. Cl.**
G01R 19/00 (2006.01)
G06F 19/00 (2006.01)
G06F 17/40 (2006.01)

(52) **U.S. Cl.** **702/63**; 180/65.21; 340/455; 340/636.1; 340/870.07; 701/22; 702/182; 702/187

(58) **Field of Classification Search** 340/992, 340/425.5, 438, 439, 455, 500, 501, 540, 340/635, 636.1, 636.11, 636.12, 636.13, 340/636.14, 636.15, 636.16, 636.17, 636.18, 340/636.19, 636.2, 679, 870.01, 870.02, 340/870.07, 870.16, 988, 989, 990, 995; 702/188, 1, 33, 34, 57, 60, 63, 127, 182, 702/187, 189; 180/65.1, 65.21, 65.22, 65.265, 180/65.275, 65.28, 65.285, 65.31, 65.8, 199, 180/200, 202, 233, 242; 324/76.11, 158.1, 324/500; 700/1, 9, 11, 17, 83, 90, 286; 701/1, 701/22, 29, 99; 709/217, 218, 219
See application file for complete search history.

(56) **References Cited**

U.S. PATENT DOCUMENTS

2,883,255 A * 4/1959 Anderson 346/34

(Continued)

Primary Examiner—Edward R Cosimano
(74) *Attorney, Agent, or Firm*—Patent Law Office of David G. Beck

(57) **ABSTRACT**

A method of communicating with an electric vehicle wherein the method includes a step of installing a communication device in the electric vehicle. The method also includes establishing a connection from the vehicle to a network. The methodology also includes controlling and monitoring a battery in the electric vehicle.

20 Claims, 3 Drawing Sheets

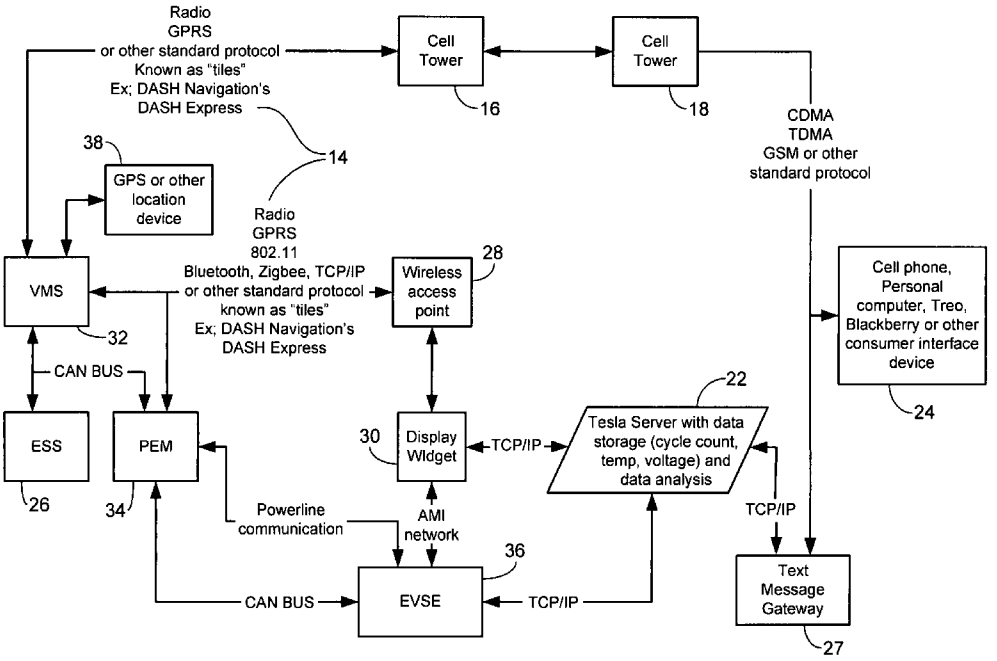

U.S. PATENT DOCUMENTS

3,005,411	A	*	10/1961	Metz	417/6
3,147,370	A	*	9/1964	Lowman	702/81
3,472,333	A	*	10/1969	Loewenstern, Jr.	180/167
3,477,538	A	*	11/1969	Hall et al.	180/65.1
3,493,068	A	*	2/1970	Albright	180/65.1
3,497,027	A	*	2/1970	Wild	180/65.245
3,500,167	A	*	3/1970	Dufendach et al.	320/132
3,500,372	A	*	3/1970	Thiele	340/517
3,502,165	A	*	3/1970	Matsukata	180/23
3,522,588	A	*	8/1970	Clarke, Jr. et al.	340/825.56
3,524,121	A	*	8/1970	Nolan et al.	322/99
3,525,874	A	*	8/1970	Toy	290/14
3,529,230	A	*	9/1970	Tedd	340/636.16
5,381,136	A	*	1/1995	Powers et al.	340/539.26
5,642,270	A	*	6/1997	Green et al.	363/17
5,808,469	A		9/1998	Kopera	
6,323,775	B1		11/2001	Hansson	
6,625,539	B1	*	9/2003	Kittell et al.	701/213
6,727,708	B1	*	4/2004	Dougherty et al.	324/427
6,826,460	B2		11/2004	Kittell et al.	
6,839,597	B2		1/2005	Hattori et al.	
7,078,828	B2	*	7/2006	Suzuki	307/10.3
7,295,849	B2	*	11/2007	Ghabra et al.	455/502
7,301,442	B2		11/2007	Kolpasky et al.	
2004/0002836	A1		1/2004	Raichle et al.	
2006/0049922	A1		3/2006	Kolpasky et al.	
2007/0200433	A1	*	8/2007	Kelty	307/66
2008/0312782	A1	*	12/2008	Berdichevsky et al.	701/22
2009/0021218	A1	*	1/2009	Kelty et al.	320/137
2009/0021364	A1	*	1/2009	Frey et al.	340/468

* cited by examiner

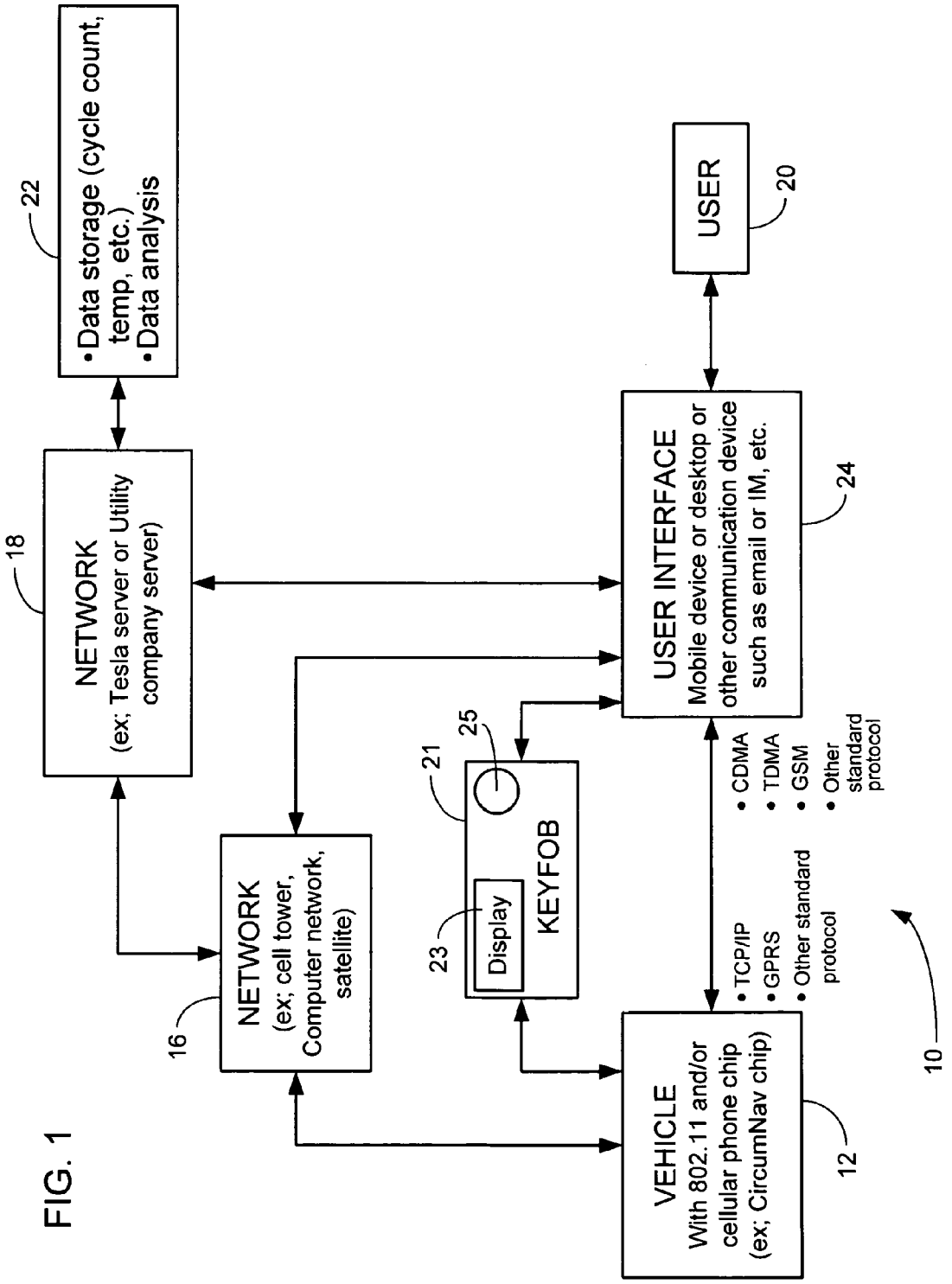
22
• Data storage (cycle count, temp, etc.)
• Data analysis
18
NETWORK
(ex; Tesla server or Utility company server)
16
NETWORK
(ex; cell tower, Computer network, satellite)
USER
20
USER INTERFACE
Mobile device or desktop or other communication device such as email or IM, etc.
24
25
21
23
Display
KEYFOB
VEHICLE
With 802.11 and/or cellular phone chip (ex; CircumNav chip)
12
• TCP/IP
• GPRS
• Other standard protocol
• CDMA
• TDMA
• GSM
• Other standard protocol
10

FIG. 1

FIG. 2

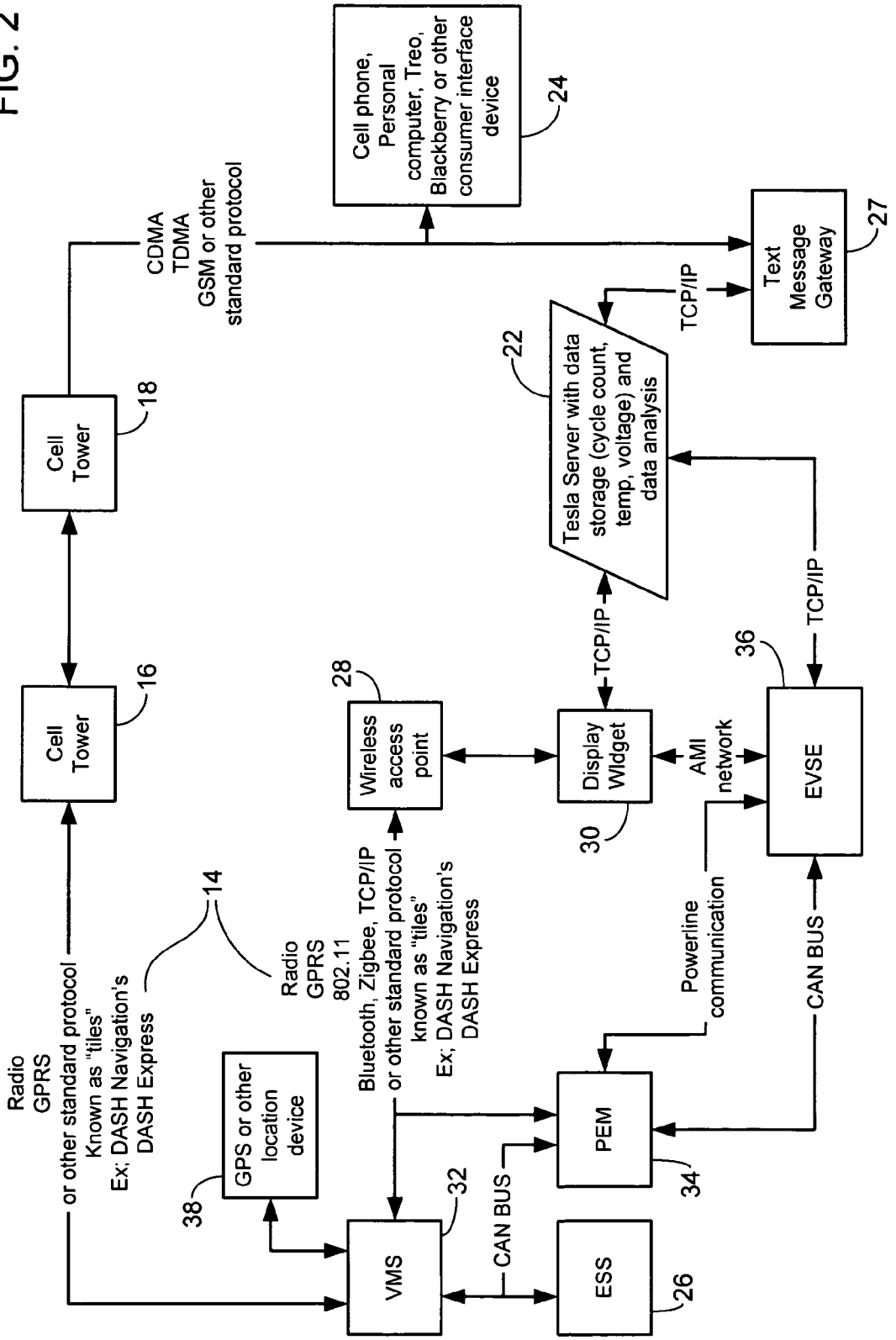
Cell phone, Personal computer, Treo, Blackberry or other consumer interface device
24
CDMA TDMA GSM or other standard protocol
Text Message Gateway
27
TCP/IP
Cell Tower
18
Tesla Server with data storage (cycle count, temp, voltage) and data analysis
22
TCP/IP
TCP/IP
Cell Tower
16
Wireless access point
28
Display Widget
30
AMI network
EVSE
36
14
Radio GPRS 802.11 Bluetooth, Zigbee, TCP/IP or other standard protocol known as "tiles" Ex; DASH Navigation's DASH Express
Powerline communication
CAN BUS
Radio GPRS or other standard protocol Known as "tiles" Ex; DASH Navigation's DASH Express
GPS or other location device
38
PEM
34
VMS
32
CAN BUS
ESS
26

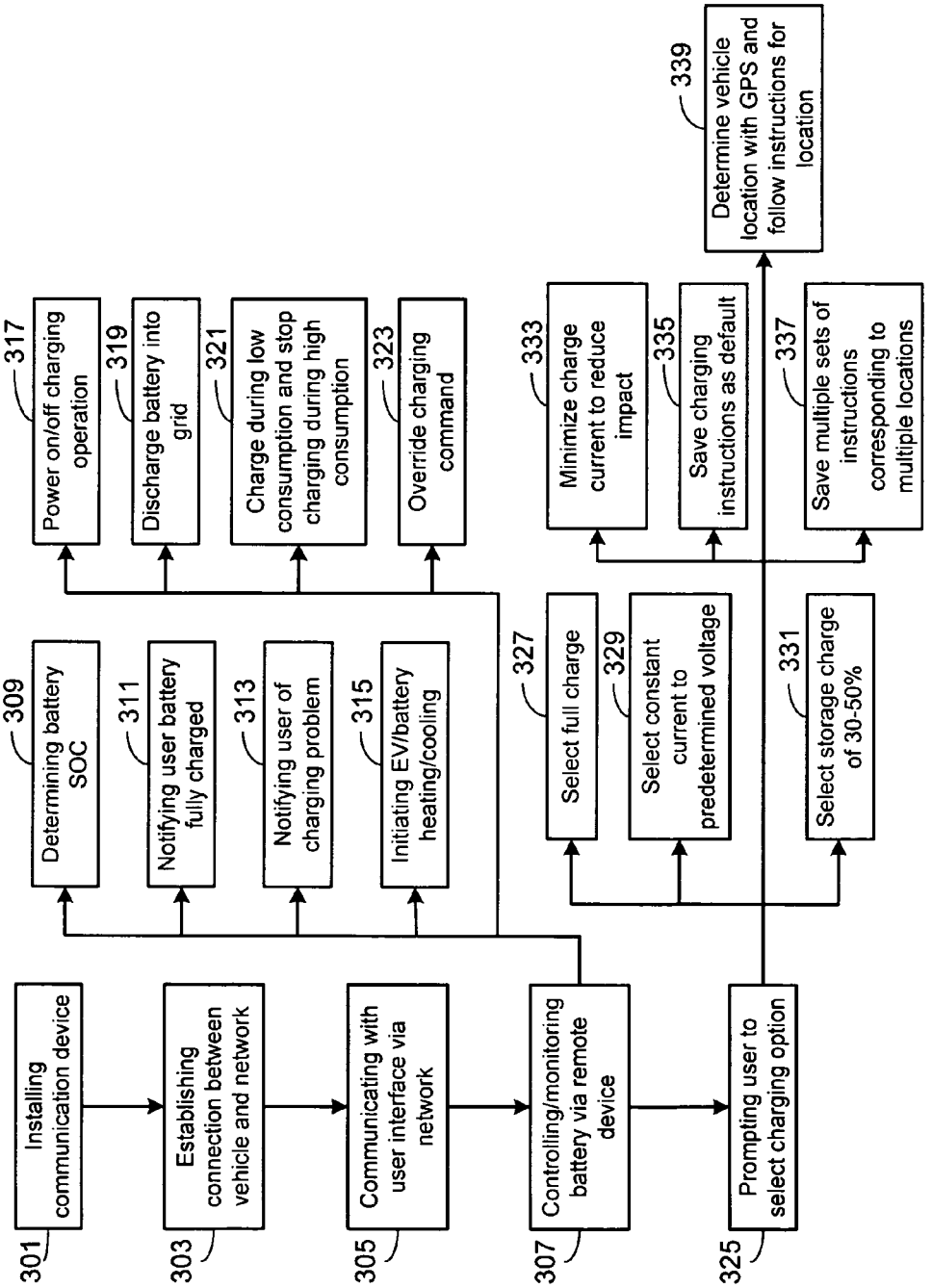
301
Installing communication device
303
Establishing connection between vehicle and network
305
Communicating with user interface via network
307
Controlling/monitoring battery via remote device
325
Prompting user to select charging option
309
Determining battery SOC
311
Notifying user battery fully charged
313
Notifying user of charging problem
315
Initiating EV/battery heating/cooling
317
Power on/off charging operation
319
Discharge battery into grid
321
Charge during low consumption and stop charging during high consumption
323
Override charging command
327
Select full charge
329
Select constant current to predetermined voltage
331
Select storage charge of 30-50%
333
Minimize charge current to reduce impact
335
Save charging instructions as default
337
Save multiple sets of instructions corresponding to multiple locations
339
Determine vehicle location with GPS and follow instructions for location

FIG. 3

ELECTRIC VEHICLE COMMUNICATION INTERFACE

This application is a continuation-in-part of pending U.S. patent application Ser. No. 11/818,838 filed Jun. 15, 2007

BACKGROUND OF THE INVENTION

1. Field of the Invention

This subject invention generally relates to a communication interface, and more particularly relates to an electric vehicle communication interface that will allow for communication between the electric vehicle and a user via either a user interface or networks connected to the vehicle.

2. Description of Related Art

The communication to and from internal combustion engine vehicles has been known for years. These internal combustion vehicles include systems that use GPS and/or satellite technology to guide vehicles and send information regarding possible vehicle crashes to a remote location for contacting emergency services and the like. Many modern day vehicles also have internal local area wireless networks, such that cell phones may be used in a hands free by the vehicle user. Many of these other systems rely on cellular communication devices and/or satellite devices to communicate from the vehicle to an external service center or from the vehicle to existing cellular networks or hard line telephones.

However, there is a need in the art for a communication interface for an all electric vehicle (EV) or plug-in hybrid electric vehicle (PHEV), wherein the vehicle operates solely on battery power and does not use an internal combustion engine alone or in combination with a battery to form a hybrid system. Therefore, a communication interface system for a complete plug in electric vehicle that relies exclusively on battery power to propel the vehicle is needed. There also is a need in the art for a communication interface for an electric vehicle or PHEV that will be able to control remotely the charging of the battery and the discharging of the battery to an electric grid if need be. There also is a need in the art for a communication interface for an electric vehicle or PHEV that will notify the user of any potential problems during the charging of the vehicle and potential problems throughout the vehicle environment that will hinder the performance of the battery and hence, the ability of the electric vehicle to travel a predetermined distance of miles. There also is the need in the art for a communication interface for an all electric vehicle wherein the manufacturer of the electric vehicle can contact the user of the vehicle if battery problems arise and if routine maintenance is needed to ensure proper functioning of the systems within the electric vehicle.

SUMMARY OF THE INVENTION

One object of the present invention may be to provide an improved communication interface for an electric vehicle, plug in electric vehicle or plug in hybrid electric vehicle.

Another object of the present invention may be to provide an improved electric vehicle communication interface that is capable of communicating with a first network and then communicating with a second network or a user of the electric vehicle, a utility company, or the manufacturer's server or other communication device.

Still another object of the present invention may be to provide an electric vehicle communication interface that is capable of communicating predetermined instructions from the user to the electric vehicle regarding the battery and charging thereof.

Still another object of the present invention may be to provide an electric vehicle communication interface where the user can be notified by the vehicle of problems with the battery during charging or when the battery is fully charged and ready for use.

Yet another object of the present invention may be to provide an electric vehicle communication interface that will allow the user to pre-register with local utility companies and energy providers to control the timing of charging of the vehicle such that charging occurs during low power consumption times at a lower cost to the vehicle user.

Still another object of the present invention may be to provide an electric vehicle communication interface that will prompt the user after driving and turning off of the electric motor to choose a predetermined charging option prior to using the vehicle again for driving.

Still another object of the present invention may be to provide an electric vehicle communication interface capable of transferring predetermined data from an electric vehicle to the manufacturer's server to create a database of user data to ensure proper operation of the electric vehicle and associated batteries.

To achieve the foregoing objects, an electric vehicle communication interface for providing a methodology of communicating with an electric vehicle is disclosed. The methodology includes installing a communication device in the electric vehicle and establishing a connection from the vehicle to a network. The methodology also includes contacting a user interface device via the network and controlling and monitoring a battery in the electric vehicle.

One advantage of the present invention may be that it provides a novel and improved electric vehicle communication interface.

Still a further advantage of the present invention may be that it provides an electric vehicle communication interface that is capable of communicating between a first network and then a second network, user, utility or server of a manufacturer of the electric vehicle.

Still another advantage of the present invention may be that it provides an interface that will allow for communication between the user and the vehicle to enable the user to control certain aspects of charging of the battery, initiation of heating and cooling of the battery and discharging of the battery to an electric grid if necessary.

Still another advantage of the present invention may be that it provides an electric vehicle communication interface that allows for the vehicle to notify the user when the battery is fully charged or if a problem has occurred during charging thus affecting the operability of the electric vehicle.

Still another advantage of the present invention may be that it provides for a method of creating a database on the manufacturer's server to ensure proper maintenance and operation of the electric vehicle.

Still another advantage of the present invention may be that it provides for the user to pre-register with a local utility company or energy provider to allow for charging of the vehicle at periods of low power consumption, thus reducing the overall cost of operating the electric vehicle.

Still another advantage of the present invention may be that it provides the ability to pre-register with the local utility to allow for discharging of the vehicle at periods of high electrical demand, or charging at periods of low demand. It can also provide the necessary information about state of charge, battery aging, and user driving needs to allow the utility to compensate the user for wear on the battery, or collect payment from the user for charging the battery.

Still another advantage of the present invention may be that it will allow for predetermined charging options to be chosen by the user of the vehicle when the user turns the motor off after each driving situation.

Yet another advantage of the present invention may be that it has the ability to contact the manufacturer's network at predetermined intervals to allow for the user data to be analyzed for vehicle efficiency purposes.

Other objects, features, and advantages of the present invention will become apparent from the subsequent description and the appended claims, taken in conjunction with the accompanying drawings.

BRIEF DESCRIPTION OF THE DRAWINGS

FIG. **1** is a schematic view of an electric vehicle communication interface and associated methodology according to the present invention.

FIG. **2** is a flow chart showing the electric vehicle communication interface according to the present invention.

FIG. **3** illustrates the methodology of an embodiment of the invention.

DESCRIPTION OF THE EMBODIMENT(S)

Referring to the drawings, an electric vehicle communication interface **10** is disclosed. The electric vehicle communication interface **10** is for use in any type of vehicle including an automobile, boat, train, plane, or any other transportation vehicle. However, it is specifically designed for use in an all electric vehicle **12**. The all electric vehicle **12** will operate completely on battery power for all propulsion and other automotive related needs. The electric vehicle **12** of the present invention uses a battery pack made of sheets of cells of lithium ion batteries arranged in a predetermined pattern. This battery pack will allow for propulsion of the electric vehicle **12** some distance before recharge is necessary. It should also be noted that the electric vehicle communication interface **10** of the present invention may be used in any other type of automotive vehicle, such as internal combustion, hydrogen cell vehicle, hybrid vehicle, alternate fuel type vehicle, or any other type of compulsion system known for a vehicle. It should also be noted that the electric vehicle communication interface may be completely wireless or include hard wire portions for use in connecting components as described herein.

FIGS. **1** and **2** show the electric vehicle communication interface **10** according to one contemplated embodiment of the present invention. FIG. **3** shows steps associated with the methodology of at least one preferred embodiment of the present invention. It should be noted that other contemplated embodiments for the connections necessary for the electric vehicle communication interface **10** may be possible. The electric vehicle communication interface **10** generally includes a communication device **14** arranged and installed within the electric vehicle **12** (step **301**). The communication device **14** may be installed in any predetermined position within the electric vehicle **12** and may also be incorporated into the computer controlling the vehicle internal network. However, the communication device **14** may also be a stand alone device depending on the device requirements and environment in which the electric vehicle **12** will be used. Generally, the communication device **14** is a communication chip which may use an 802.11 protocol, cellular or other standard protocol which are all well known in the art. In one specific embodiment a communication chip **14** developed by CircumNav Network may be used for the communication device **14** of the present invention. The electric vehicle **12** uses a communication chip **14** that is capable of communicating via any known protocol such as TCP/IP, GPRS, or any other standard protocol. The communication chip **14** allows for communication with a network **16** (step **303**) that may be cellular, internet, satellite or any other type of network or with a wired or wireless access point **28**. After the initial communication with network **16** the methodology then sends a communication from the network **16** to a second network **18** or to the user or driver **20** of the vehicle, or to a utility company or the manufacturer of the electric vehicle communication hub or server **22**. The second network **18** may include a manufacturer server or utility company server or any other known type of network while the first network **16** may include any cell tower, computer network, satellite system or hard line such as a phone network or power line network. The user **20** will be capable of communicating with either the first network **16**, the second network **18** or directly with the vehicle **12** via any user interface device **24** (step **305**). Contemplated user interface devices **24** may include but are not limited to mobile devices, such as cell phones, PDA's, handheld devices, desktop computers, laptop computers or any other communication device that is capable of producing email, IM, or any other communication device that is well known in the art. Some of these communications between the user interface devices **24** and either the first and second network **16**, **18** or the vehicle **12** may be performed via the code division multiple access standards (CDMA), the time division multiple access standards (TDMA), the global system for mobile communication standards (GSM), 802.11, BlueTooth, ZigBee, powerline communications including but not limited to HomePlug or Lonworks, a proprietary or standard communications protocol overlaid on existing charging communications equipment, a standard protocol such as CAN implemented on a custom physical layer, or any other standard protocol that is known in both wireless and hardwired configurations, for communication between any of the known user interface devices **24** and the first and second network **16**, **18** or the electric vehicle **12** directly.

If the 802.11 standard is chosen for use in the electric vehicle **12**, the user **20** of the vehicle may then need to install and use a wireless router or any other known wireless access point **28** to enable the router to accept login from the electric vehicle **12** to allow for communication between the user interface device **24** and the electric vehicle communication chip **14** which operates on the 802.11 standard. It should be noted that with the other standards or protocols contemplated for use, other specific needs such as wireless router, hardwired connections, or the like may be needed and are all contemplated for use if necessary depending on the design requirement of the electric vehicle communication interface **10** as used in the electric vehicle **12**.

The use of the communication chip **14** as described above in the electric vehicle **12** may allow for communication to the first network **16** to allow for the vehicle **12** to contact the user **20** via the user interface device **24** by any known mobile device or desktop, laptop, etc., via either email, instant messaging or any other known communication protocol. Also, it should be noted that the user or driver **20** of the vehicle is also capable of communicating with the electric vehicle **12** from their portable device such as a cell phone, PDA, laptop, personal computer, server, any known text messaging device, any known display device located at any known location or any other communication device either directly with the vehicle **12** or through the first and second networks **16**, **18** to the vehicle to program and send specific instructions to the electric vehicle **12** for controlling and monitoring the battery

system **26** arranged within the electric vehicle **12** (step **307**). Such portable communication devices may be placed in a home or at another location of the user **20**, **50** the user **20** may check or change the charge status and settings or other vehicle parameters. This communication between the electric vehicle **12** and user **20** or user **20** and electric vehicle **12** enables a plurality of scenarios through which the communication will have specific functions with respect to the propulsion system and other internal components of the electric vehicle **12**. In one contemplated controlling methodology for the communication interface **10**, the user **20** may be capable of querying or monitoring the electric vehicle's battery pack and cells **26** for its state of charge (SOC) (step **309**). This will allow the user **20** to determine if the battery **26** is capable of driving the distance the user **20** must travel, if the battery **26** has not been charging or if the battery **26** is charged to the level set by the user and capable of a maximum mileage trip based on the battery installed therein. Another contemplated methodology will have the electric vehicle **12** notifying the user or driver **20** that the battery **26** is fully charged (step **311**) and is ready for driving. Yet another methodology contemplated will have the vehicle **12** notifying the user or driver **20** that a problem occurred during charging of the battery **26** (step **313**) and that the maximum distance for travel for the electric vehicle **12** has been reduced or that the electric vehicle **12** needs immediate servicing and is not available for driving at the present time. Still yet another methodology contemplated for the electric vehicle communication interface **10** for the present invention will have the user or driver **20** of the electric vehicle requesting the electric vehicle **12** to initiate heating or cooling of the vehicle **12** along with initiate heating or cooling of the battery cells and associated battery pack **26** to prepare for driving of the electric vehicle **12** (step **315**). This preparation may include adjusting the battery temperature based on the distance of the expected drive, the external temperature that the electric vehicle **12** will be used in, the weather in which the electric vehicle will be driven and/or any other parameters that effect the performance and durability of the battery **26** and hence the electric vehicle **12** in the driving environment. Still yet another methodology contemplated for use in the communication interface **10** of the present invention may have the user **20** capable of powering on and off in predetermined cycles and at predetermined times the charging of the battery **26** from a user interface device **24** (step **317**). Furthermore, the user **20** may be capable of discharging the battery **26** into the electricity or electric grid (step **319**) of the locale in which the electric vehicle **12** is either charged or stored via a vehicle to grid application that will allow for communication between a local utility company server and the electric vehicle **12**, thus allowing for certain operations to be performed by the utility company and the user **20** on the electric vehicle **12**. Yet another use would be to alert the user or manufacturer that the battery **26** is falling below the minimum accepted storage levels (3.0V for example). Such discharge of the battery **26** may allow the user to plug in the vehicle or recharge the battery **26** by other means to preserve the battery **26**.

The vehicle to electricity grid applications and methodology may allow for the user **20** to either pre-register or associate with a local utility company or energy provider which will allow for the utility company to control the timing of charging or discharging of the electric vehicle **12**. This will allow the utility company during periods of high power consumption to have the option of turning off the charging of the electric vehicle **12** to help reduce the load on the electric grid controlled by the utility company and to avoid the sometimes necessary rolling blackouts (step **321**). This also may allow for charging the vehicle **12** during periods of low power consumption by having the utility company to turn the charging of the electric vehicle **12** back on thus reducing the overall cost of operating the electric vehicle **12** by allowing for charging of the vehicle during periods of low power consumption which may result in lower kilowatts charges to the user of the electric vehicle **12** (step **321**). It should be noted that the user **20** through the electric vehicle communication interface **10** and associated methodologies may be capable of having a preset operating command to automatically reject or accept such charging control or request for such from the utility company. This methodology would allow for the user **20** to override the utility company instruction of stopping charging (step **323**) because of high power consumption if the user **20** of the electric vehicle **12** needs the battery **26** charged at the current time in order to use the vehicle in the near future. It is contemplated that this type of mutual control between the utility company and the electric vehicle **12** may be executed via the internet using the 802.11 communication protocol or cell phone communication with the electric vehicle **12** by the user **20** or the utility company. It should also be noted that it is contemplated within this methodology that the utility company may also be capable of remotely querying and sampling the electric vehicles state of charge for the associated battery pack **26** and then send predetermined and specific instructions or requests to the electric vehicle and/or user to discharge electricity back into the grid via the vehicle to grid applications stored within the electric vehicle communication interface **10**. This will allow the user **20** to further reduce its cost by discharging electricity back into the electric grid of the utility company and hence receiving credits and the like.

The electric vehicle communication interface **10** also may include an in vehicle display **30** which may be any known display touch screen, screen, TV, tube or any other type of display device known. The dashboard display **30** may be arranged in any part of the vehicle **12** including but not limited to sun visors, heads up displays, anywhere in the instrument panel, anywhere in the seats, or any other position within the vehicle and it is even contemplated to have a touch screen on the outer surface of the vehicle. When the user or driver **20** of the electric vehicle **12** turns off the motor of the electric vehicle **12**, the user **20** may be prompted via the display device **30** in the vehicle **12** to choose or select one of a plurality of predetermined charging options for the electric vehicle battery pack **26** (step **325**). It should be noted that the user **20** may also use a menu or voice controlled device that allows for selection of a next charge state at any time during use of the vehicle. In one contemplated embodiment there will be three separate charging options which will be displayed on the touch screen **30** display located in the vehicle's interior compartment. These charging options may include a boost charge which in theory is a full charge to the battery **26** of the electric vehicle **12** (step **327**). By selecting the boost charge, the user **20** will be able to have maximum driving range such that the next time the user drives the electric vehicle **12** they can travel the maximum distance capable from the electric vehicle, however the boost charge may affect the durability and battery life of the battery pack **26** in the electric vehicle **12** over time. The second charging option displayed to the user or driver **20** of the electric vehicle **12** will be the regular charge option. The regular charge option generally will deliver a constant current charge up to a predetermined set voltage (step **329**). The predetermined set voltage will be determined based on the battery pack system **26** and the configuration of the battery pack therein. It should be noted that a taper charge will not be used during the regular charge, which will result in the battery **26** not being com-

pletely charged after the regular charge option is chosen by the user. However, the regular charge will benefit the driver/user **20** of the vehicle **12** by allowing a quicker charge of the battery **26** and prolong battery life of the battery pack **26** in the electric vehicle **12**. However, the driving range will be reduced by a predetermined amount when selecting the regular charge option. In one contemplated embodiment the driving range will be reduced by about 4 to 10%. However, the reductions may generally be anywhere from 2% to 30% depending on the design requirements and batteries therein. The third option for one contemplated embodiment for charging of the battery pack **26** of the electric vehicle **12** will be a storage charge. This will allow the user **20** of the vehicle that does not plan to use the vehicle on a regular basis to maximize the life of the battery pack **26**. Generally, the storage charge is approximately a 30 to 50% charge (step **331**). However, it should be noted that a range of 10 to 70% charge may also be used depending on the design requirements and environment in which the electric vehicle will be used. The storage charge will allow for the maximum life and durability of the battery pack system **26** in the electric vehicle **12**.

It should also be noted that the charging options may also include within its methodology a follow up menu that will allow the user or driver **20** of the vehicle **12** the choice of setting one of the predetermined charging options as the default such that every time the user exits the vehicle and begins charging of the battery pack **26** within the electric vehicle **12** such setting will be automatically used for charging thereof. It should also be noted that the methodology of charging options as discussed above may also be added to a keyfob or remote keyless entry device **21** such that the options are capable of being chosen via a keyfob **21** that comes with the electric vehicle **12**. The keyfob **21** also may display the charge status of the battery pack by either a visual means **23** or audible means. The vehicle user **20** may also control the starting and stopping of charging of the battery pack via the means **25** of keyfob along with other communication and control of the electric vehicle **12**. Furthermore, the options may also be added to a cell phone connection or other mobile device to follow the network connections of the first and second network **16**, **18** as described above to allow for choosing of one the charging options and setting any default via any user interface device **24**.

The communication chip **14** using the GPRS, which is a general packet radio service protocol, 802.11 standard, TCP/IP or any other standard protocol may communicate with a vehicle management system **32** which is the onboard computer that monitors, controls and coordinates various systems in the electric vehicle **12** including the power electronics module **34**, the energy storage system (ESS) **26** and the HVAC system along with the user interface **24**. The communication chip **14** may also communicate with the wireless access point **28** or the power electronics module **34**. The energy storage system (ESS) **26**, which is controlled by the vehicle management system **32** via a CAN BUS or any other known communication interface or path, includes the battery pack of the electric vehicle **12** which is used to provide the power necessary to propel the electric vehicle **12** without the need for an internal combustion engine. The power electronics module **34** which is also controlled by the vehicle management system **32**, will house a DC to AC inverter for a traction motor, a AC to DC rectifier for charging and the control PCB's for drive and charge of the electric vehicle energy storage system. The power electronics module **34** may also be in communication with an electric vehicle service equipment module **36** via power line communication, CAN BUS or any other known communication method, which also may be in communication with the display device **30** of the electric vehicle **12**. This will allow for any messages to be communicated to the user of the vehicle via the display device **30** within the vehicle. These messages may include service, appointments, or other tips to improve the mileage and efficiency of the battery pack **26** within the electric vehicle **12**.

A further component of the methodology used in the electric vehicle communication interface **10** will allow for the electric vehicle **12** every time it comes into contact with the home network of the manufacturer of the electric vehicle **12** or any other open network that it will send a message automatically through the communication chip **14** and over any known protocol such as the 802.11 standard to the manufacturers server **22** which may be networked to as described above. The server **22** may also be in communication with the display device **30**, the electric vehicle service equipment **36**, or the text message gateway **27**. The manufacturer may then be capable of forming a database of the user data such that the data storage will be held separately on the manufacturers server and will allow for cycle count, temperature, and other necessary data to be stored and evaluated or monitored to ensure efficient operation of the battery pack system and energy storage system within the electric vehicle **12**. The manufacturer's server **22** also may be capable of data analysis regarding the charging cycles of the battery, miles driven per charge, temperature of the batteries, and any other data that is relevant to the efficient operation of the electric vehicle **12**. Therefore, every time the electric vehicle **12** comes in contact with a home network or other open network as described above it will automatically send, via a network, data to the manufacturer's server **22** from the vehicle **12**, battery pack and energy storage system **26**. It should be noted that the communication protocol methodology will give the user or driver **20** of the electric vehicle **12** the option of disabling the automatic messaging to the manufacturer's server **22** via the vehicle display touch screen or via programming by a user interface device **24** on the internet or the like. It is also contemplated that upon initial programming of the vehicle **12** the user **20** may be able to set a default for either enabling or disabling the automatic message function. It should also be noted that it is contemplated that the methodology will allow the user or driver of the vehicle to access this data from the manufacturers server **22** via a portable hand held device or personal computer if necessary. It should also be noted that the manufacturer may use this data to broadcast specific messages to the user or driver **20** through the onboard communication chip **14** or through a cellular connection which will allow for displaying on the dashboard touch screen device **30**. These messages that may be shown on the display **30** may include servicing requirements or tips to increase the efficiency of the vehicle **12**, such as checking tire pressure, battery temperature and the like.

It is also contemplated to have a methodology that allows the driver or user **22** of the electric vehicle **12** who periodically travels to a second home or other location to automatically be able to choose the boost charge or extended charge whenever they go to the second home, which is located a predetermined distance from their first home location. It is contemplated that this methodology may also use an onboard location device, such as a global positioning satellite or system (GPS) or the like, in the vehicle **12** to automatically identify that the user **20** has stopped or parked at a second home or location and automatically follow the saved preset charging instructions if not overridden by a new setting or user **20** action. Furthermore, the methodology may be capable of determining that if the cost of electricity may be higher at the second location that the user **20** of the vehicle **12**

may want to charge at a different time of day at that second location to reduce their cost of charging the battery pack of the electric vehicle **12**. Furthermore, they may also want to do the boost charge just prior to leaving for the second home such that intermediate driving which may reduce the range of the electric vehicle **12** does not occur before traveling to the second home or location that is predetermined and stored in the user interface **24**. This methodology may be implemented with the following steps on the user interface screen located in the electric vehicle **12** or remotely at a computer, PDA, keyfob or the like. The first step of the methodology would ask if the user **20** wants to initiate a storage, regular or boost charge. The next step of the methodology would then ask the user **20** if they want to delay the charge until the electricity rates are reduced which generally occurs at night time or other predetermined times as notified by the utility server of a utility company. Next the methodology would query if the user **20** wants to minimize the charge current which would have less impact on the household appliances of either the first or second home at which the electric vehicle **12** is being charged (step **333**). Then the methodology may query if the user **20** wants to save these answers as a default for the second house location or second remote location that the electric vehicle **12** will be used at (step **335**). Therefore, this methodology will allow for a separate set of parameters to be stored for a second house or second location at which the electric vehicle **12** may be used by the user **20** on a generally regular basis (step **337**). The methodology may also use a GPS device **38** with the vehicle **12** to identify and store the other locations. When the GPS device **38** determines that the vehicle **12** is at the second or one of the other stored locations it will automatically follow the preset charging routine relating to such location (step **339**) unless such preset routine is overridden by a new setting or user **20** actions. It is also contemplated to have multiple locations storable on the interface **10**, with such information as described above, so users **20** who have multiple homes or locations at which the electric vehicle **12** may regularly be used, stored or located at for a predetermined amount of time have preset parameters for charging and other vehicle functions available for each separate location.

Therefore, the above electric vehicle communication interface **10** has been described in one contemplated embodiment, however it should be noted that other contemplated embodiments and other methodologies that will allow for communication between the electric vehicle **12** and the user **20** and the passing of commands and monitoring of systems between the user **20** and the electric vehicle **12** and the manufacturer of the vehicle **12** are also contemplated and can be used in the scope of the electric vehicle communication interface **10** invention as described herein.

The present invention has been described in an illustrative manner. It is to be understood that the terminology which has been used is intended to be in the nature of words of description rather than of limitation.

Many modifications and variations of the present invention are possible in light of the above teachings. Therefore, within the scope of the appended claims, the present invention may be practiced otherwise than as specifically described.

What is claimed is:

1. A method of communicating with an electric vehicle, said method including the steps of:

installing a communication device in the electric vehicle;

establishing a connection from the vehicle to a network;

communicating with a user interface via said network; and

controlling and monitoring a battery in the electric vehicle via a device remote from the electric vehicle.

2. The method of claim **1** wherein said communication device is a chip using an 802.11, cellular, powerline communication, or other standard or custom protocol.

3. The method of claim **1** wherein said step of controlling and monitoring includes determining the battery state of charge.

4. The method of claim **1** wherein said step of controlling and monitoring includes the vehicle notifying a user that the battery is fully charged.

5. The method of claim **1** wherein said step of controlling and monitoring includes the vehicle notifying a user if charging problems occurred.

6. The method of claim **1** wherein said step of controlling and monitoring further includes the step of a user initiating heating or cooling of the vehicle or the battery to prepare for driving of the vehicle.

7. The method of claim **1** wherein said step of controlling and monitoring includes a user powering on or off a charging of the battery.

8. The method of claim **1** wherein said step of controlling and monitoring includes a user discharging the battery into an electricity grid.

9. The method of claim **1** wherein said step of controlling and monitoring further includes charging during low power consumption periods, stopping charging during high power consumption periods and providing for a user override of charging commands from a third party from a keyfob or remote keyless entry member.

10. The method of claim **9** further including the step of prompting a user of the vehicle to choose a predetermined charging option when the vehicle is turned off.

11. The method of claim **10** wherein said step of prompting includes predetermined charging options of a full charge, a constant current charge up to a predetermined voltage, and a storage of 30 to 50% charge.

12. The method of claim **11** further including a step of determining if the user wants to minimize charge current to reduce impact on household appliances.

13. The method of claim **12** further including a step of determining if the user wants to save charging instructions as a default for a predetermined location.

14. The method of claim **13** wherein multiple location charging instructions may be saved by the user interface for multiple homes or business locations.

15. The method of claim **14** further including a step of determining said location of the vehicle via a GPS device and automatically following said saved charging instructions for said predetermined location.

16. An apparatus for connecting an electric vehicle, having a battery pack for solely propelling the electrical vehicle, with a user of the vehicle, the manufacturer of the vehicle or an utility company, said apparatus including:

a communication chip located in the vehicle;

a first network in communication with said chip;

a second network in communication with said first network;

a data storage and data analysis device in communication with said second network;

a user interface device in communication with said chip, said first network or said second network; and

a remote device in communication with the vehicle and said user interface device.

17. The apparatus of claim **16** said user interface storing multiple charging instructions for the battery pack at multiple predetermined locations the vehicle may be located on a generally regular or irregular basis.

18. The apparatus of claim **16** wherein said remote device is a keyfob or remote keyless entry device.

19. The apparatus of claim **18** wherein said keyfob controls a starting or stopping of a charging of the battery pack.

20. An apparatus for connecting an electric vehicle, having a battery pack for solely propelling the electrical vehicle, with a user of the vehicle, the manufacturer of the vehicle or an utility company, said apparatus including:

a communication chip located in the vehicle;

a first network in communication with said chip;

a second network in communication with said first network;

a data storage and data analysis device in communication with said second network;

a user interface device in communication with said chip, said first network or said second network; and

a keyfob or remote keyless entry device in communication with the vehicle and said user interface device, said keyfob displays a charge status of the battery pack.

* * * * *