US 20080136371A1

(19) United States

(12) Patent Application Publication

(10) Pub. No.: US 2008/0136371 A1

(43) Pub. Date: Jun. 12, 2008

Sutardja

(54) PLUG-IN VEHICLE

(76) Inventor: **Sehat Sutardja**, Los Altos Hills, CA (US)

Correspondence Address:
HARNESS, DICKEY & PIERCE P.L.C.
5445 CORPORATE DRIVE, SUITE 200
TROY, MI 48098

(21) Appl. No.: **11/950,168**

(22) Filed: **Dec. 4, 2007**

Related U.S. Application Data

(60) Provisional application No. 60/868,781, filed on Dec. 6, 2006, provisional application No. 60/891,834, filed on Feb. 27, 2007.

Publication Classification

(51) **Int. Cl.**
H02J 7/02 (2006.01)
B60L 11/06 (2006.01)

(52) **U.S. Cl.** **320/109**; 701/22; 903/907

(57) **ABSTRACT**

A system includes a control module, a network interface module, and a charging module. The control module stores a first set of charging parameters for charging a battery in a vehicle. The network interface module transmits the first set of charging parameters to a utility company and receives a reply from the utility company. The control module generates a charge control signal based on the reply and the first set of charging parameters. The charging module charges the battery of the vehicle based on the charge control signal.

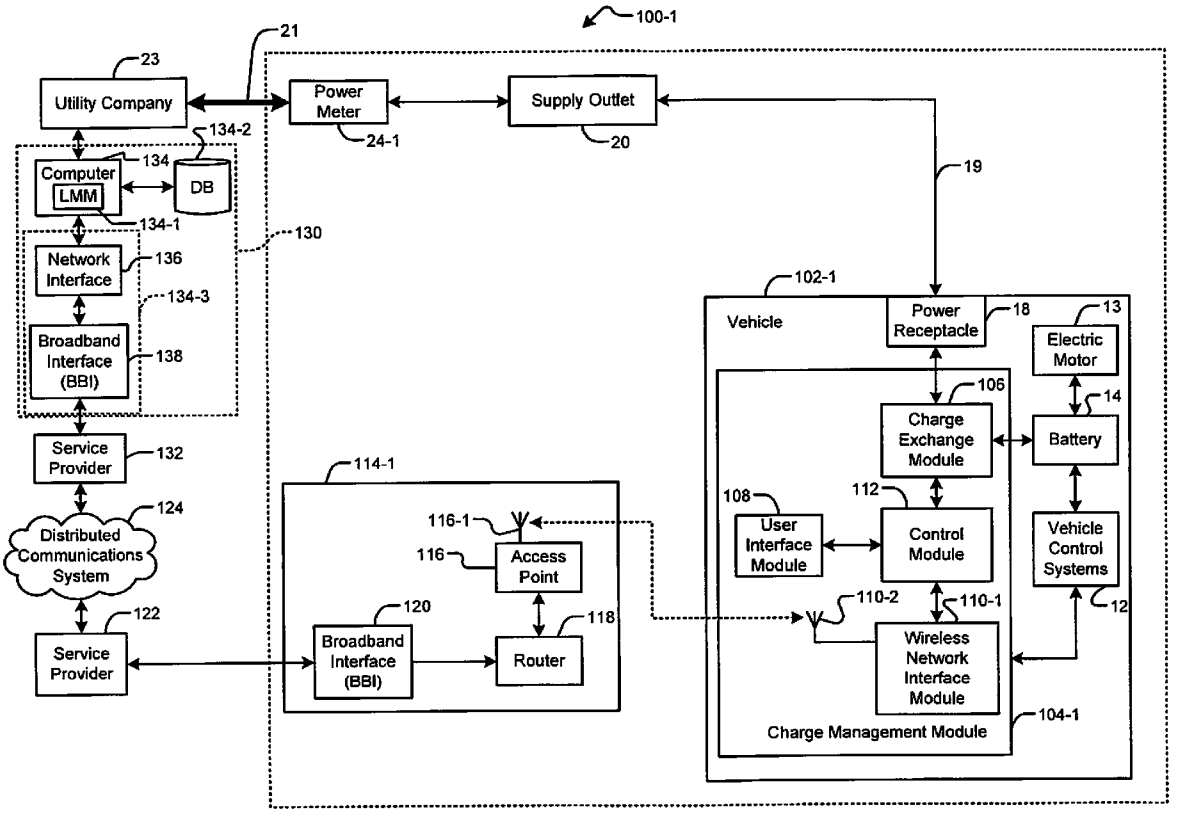

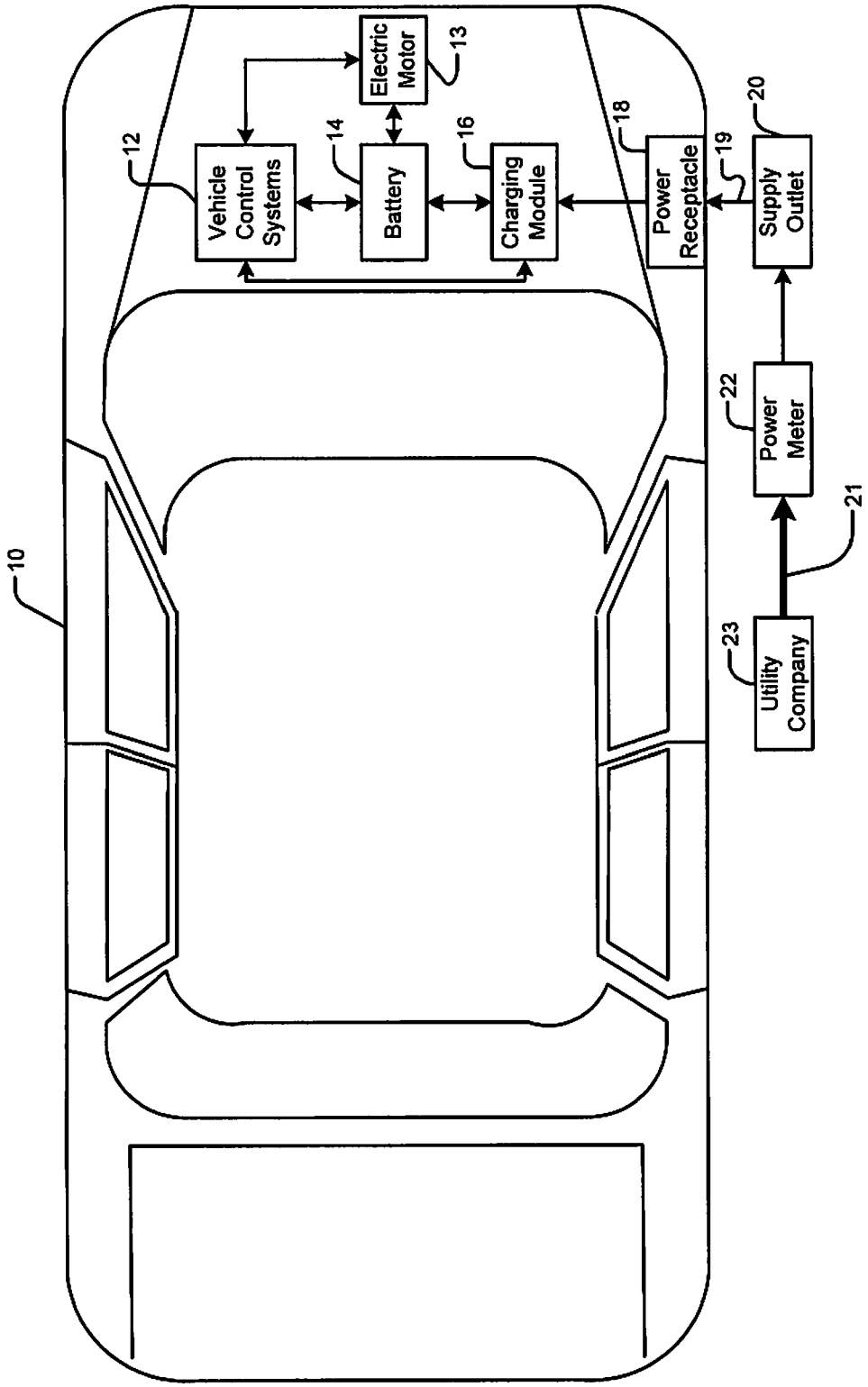

FIG. 1
Prior Art

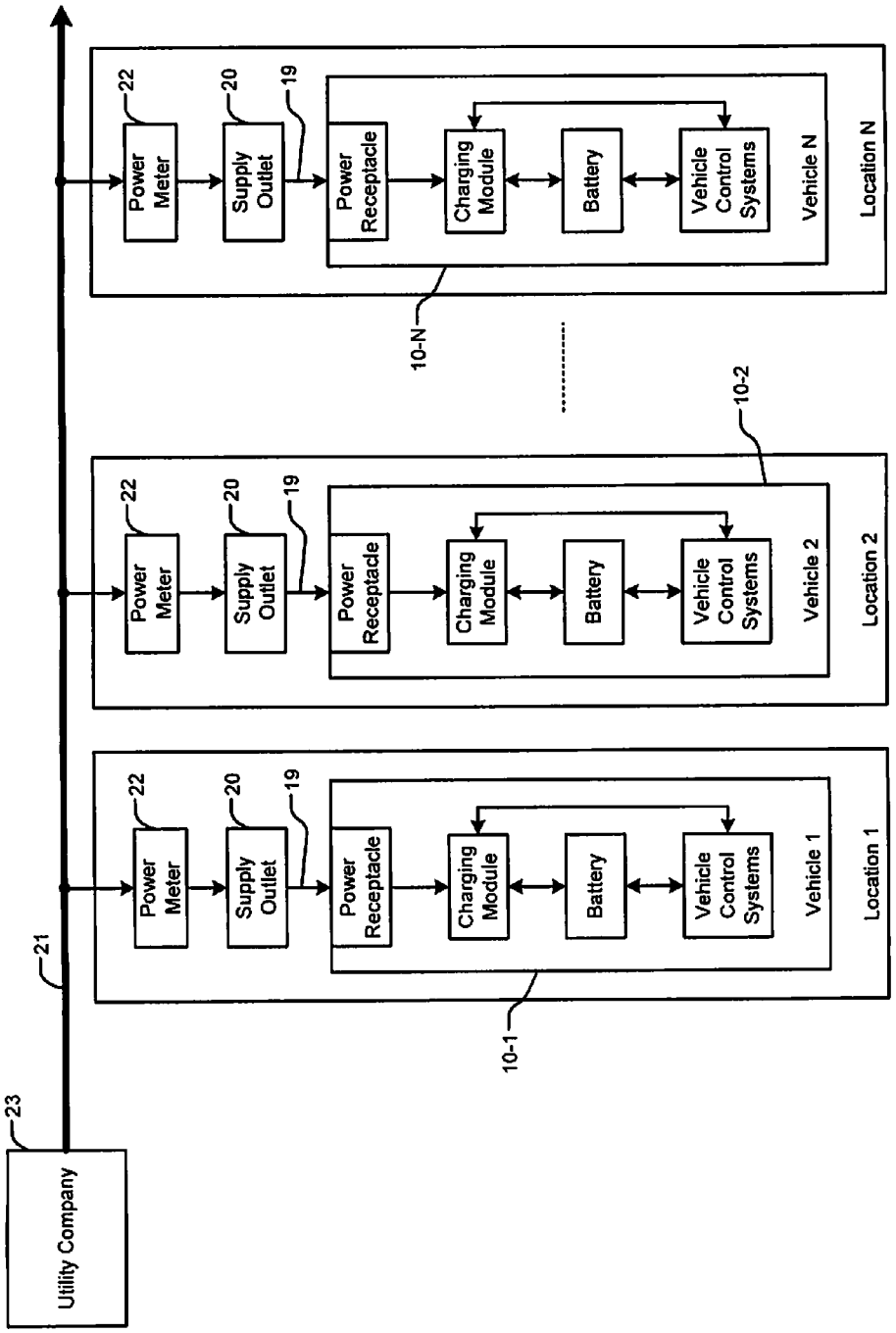
Utility Company
23
21
Power Meter
22
Supply Outlet
20
19
Power Receptacle
Charging Module
Battery
Vehicle Control Systems
Vehicle 1
Location 1
10-1
Vehicle 2
Location 2
10-2
Vehicle N
Location N
10-N

FIG. 2

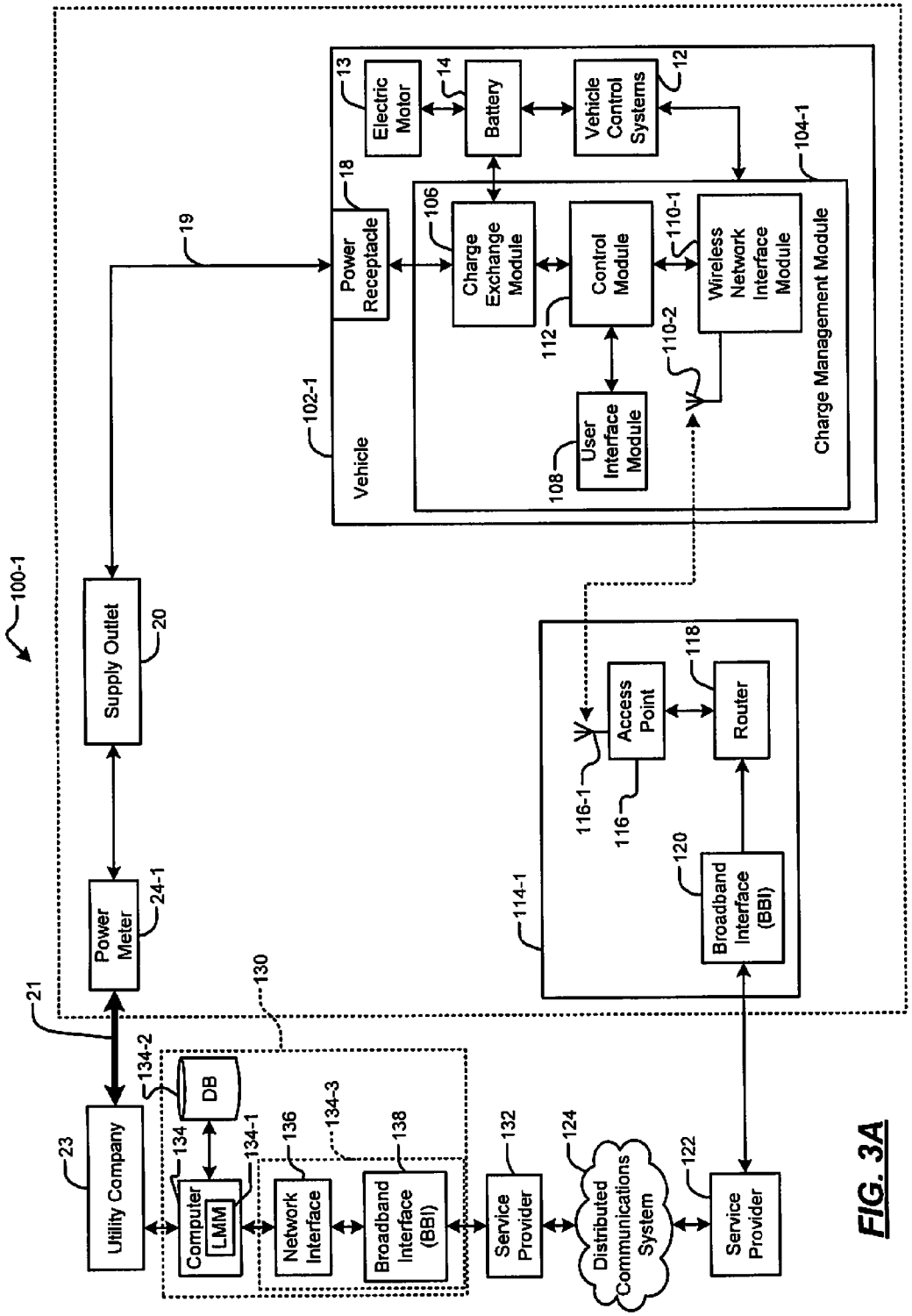
100-1
Supply Outlet
20
19
Power Meter
24-1
21
Utility Company
23
Vehicle
102-1
Power Receptacle
18
Electric Motor
13
Battery
14
Vehicle Control Systems
12
Charge Exchange Module
106
Control Module
112
Wireless Network Interface Module
110-1
110-2
User Interface Module
108
Charge Management Module
104-1
Access Point
116
116-1
Router
118
Broadband Interface (BBI)
120
114-1
130
Computer
134
LMM
134-1
DB
134-2
Network Interface
136
Broadband Interface (BBI)
138
134-3
Service Provider
132
Distributed Communications System
124
Service Provider
122

FIG. 3A

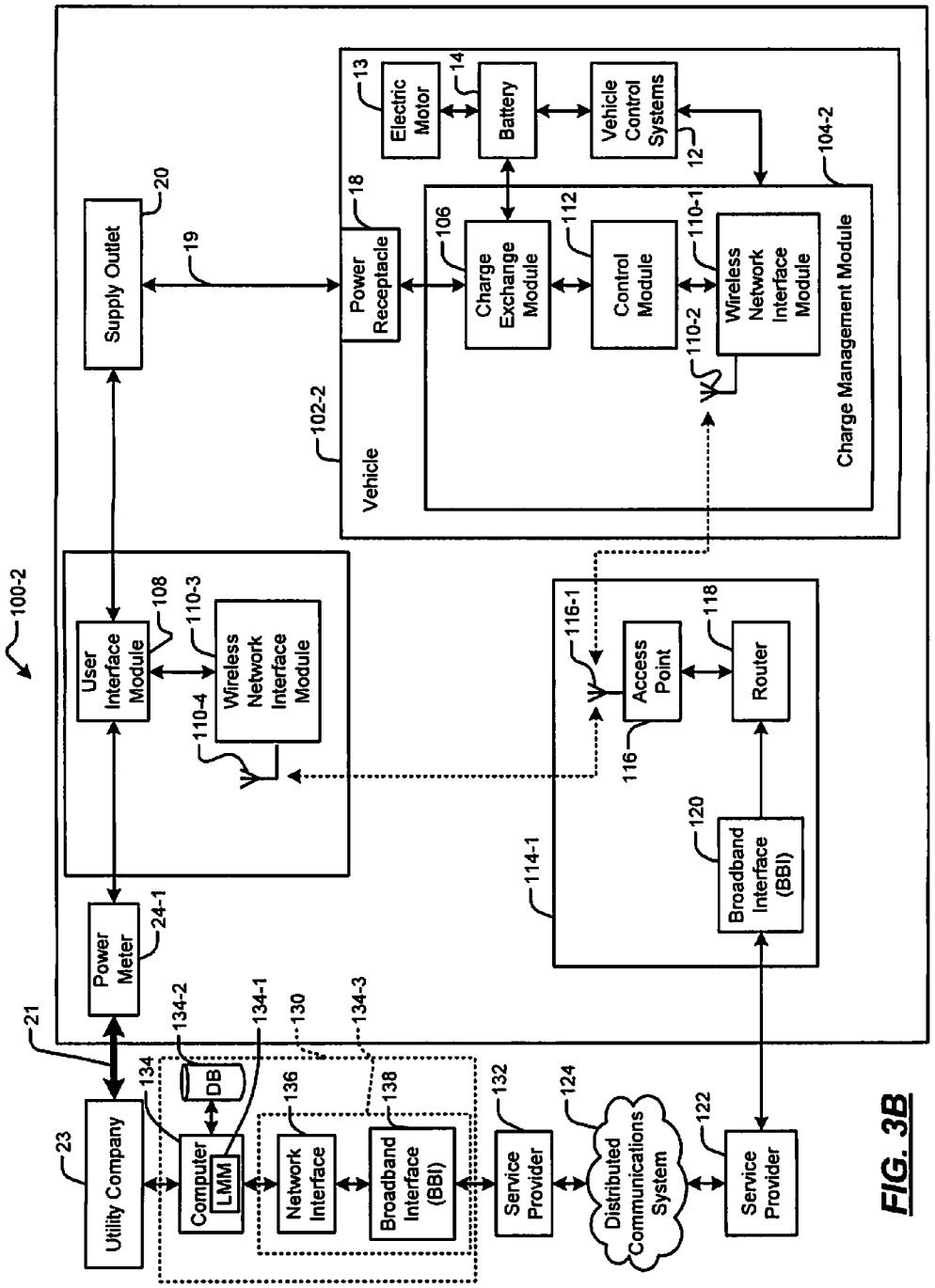
100-2
Supply Outlet
20
19
Power Receptacle
18
Electric Motor
13
Battery
14
Vehicle Control Systems
12
Charge Exchange Module
106
Control Module
112
Wireless Network Interface Module
110-1
110-2
Charge Management Module
104-2
Vehicle
102-2
User Interface Module
108
Wireless Network Interface Module
110-3
110-4
Access Point
116-1
116
Router
118
Broadband Interface (BBI)
120
114-1
Power Meter
24-1
21
Utility Company
23
134
Computer
LMM
DB
134-2
134-1
130
134-3
Network Interface
136
Broadband Interface (BBI)
138
Service Provider
132
Distributed Communications System
124
Service Provider
122

FIG. 3B

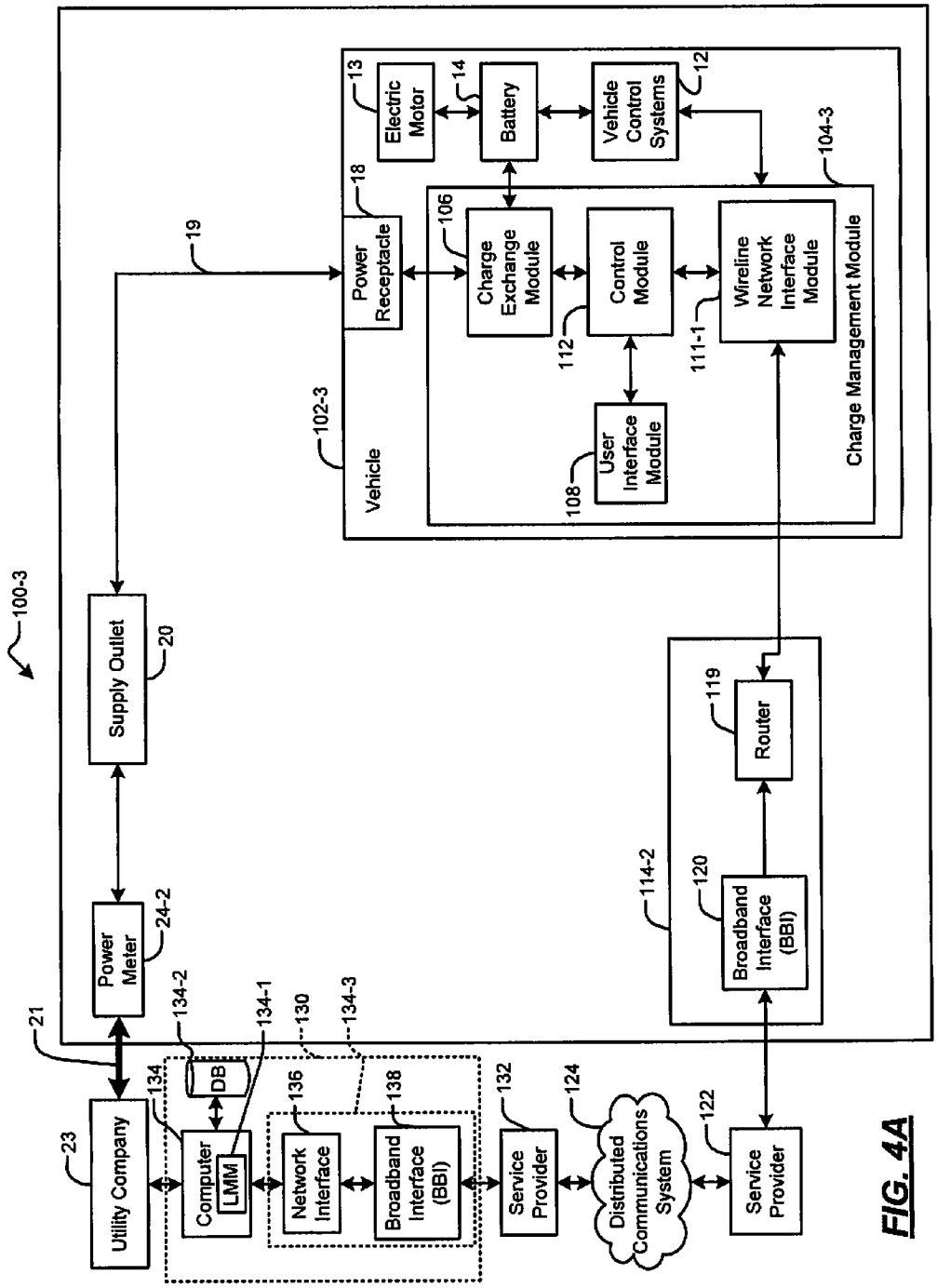
100-3
Supply Outlet
20
19
Power Meter
24-2
21
Utility Company
23
Vehicle
102-3
Power Receptacle
18
Electric Motor
13
Battery
14
Vehicle Control Systems
12
Charge Exchange Module
106
Control Module
112
Wireline Network Interface Module
111-1
User Interface Module
108
Charge Management Module
104-3
Router
119
Broadband Interface (BBI)
120
114-2
Computer
LMM
DB
134
134-2
134-1
Network Interface
136
Broadband Interface (BBI)
138
130
134-3
Service Provider
132
Distributed Communications System
124
Service Provider
122

FIG. 4A

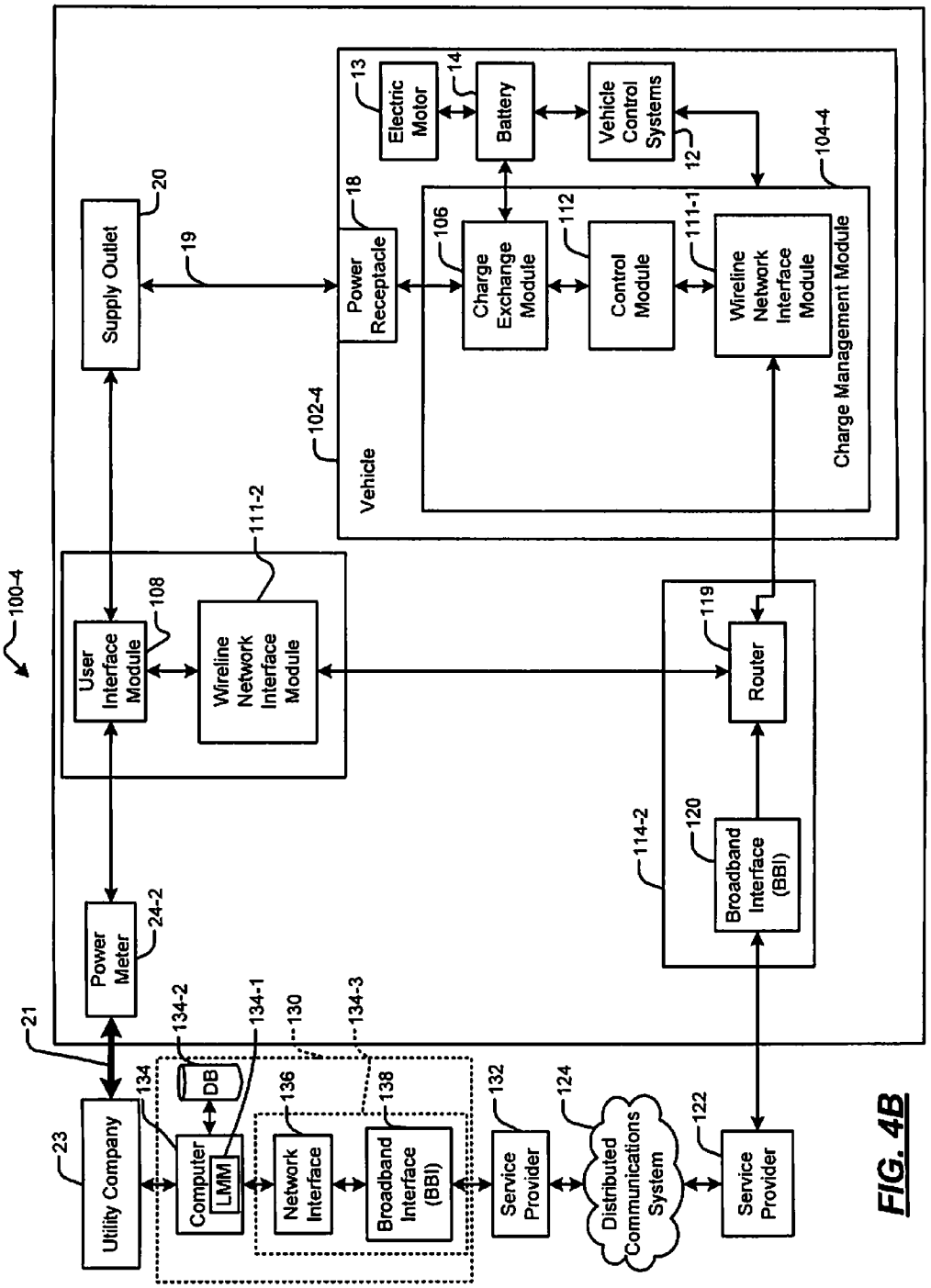
100-4
Supply Outlet
20
19
Power Receptacle
18
Electric Motor
13
Battery
14
Vehicle Control Systems
12
Charge Exchange Module
106
Control Module
112
Wireline Network Interface Module
111-1
104-4
Charge Management Module
Vehicle
102-4
User Interface Module
108
Wireline Network Interface Module
111-2
Router
119
Broadband Interface (BBI)
120
114-2
Power Meter
24-2
21
Utility Company
23
134
Computer
LMM
DB
134-2
134-1
130
134-3
Network Interface
136
Broadband Interface (BBI)
138
Service Provider
132
Distributed Communications System
124
Service Provider
122

FIG. 4B

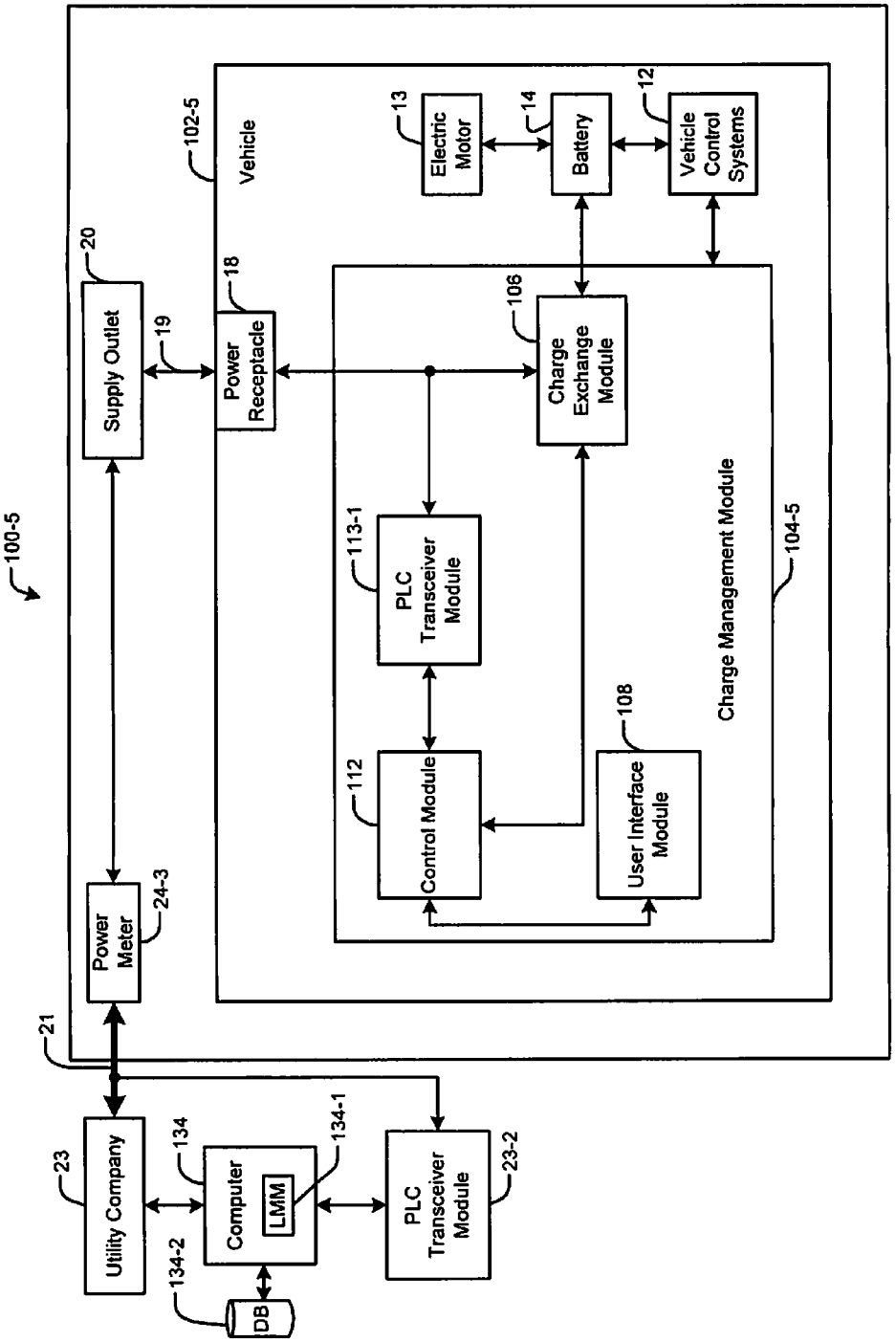
100-5
Supply Outlet
20
19
Power Receptacle
18
102-5
Vehicle
Electric Motor
13
Battery
14
Vehicle Control Systems
12
Charge Exchange Module
106
PLC Transceiver Module
113-1
Control Module
112
User Interface Module
108
Charge Management Module
104-5
Power Meter
24-3
21
Utility Company
23
Computer
134
LMM
134-1
DB
134-2
PLC Transceiver Module
23-2

FIG. 5A

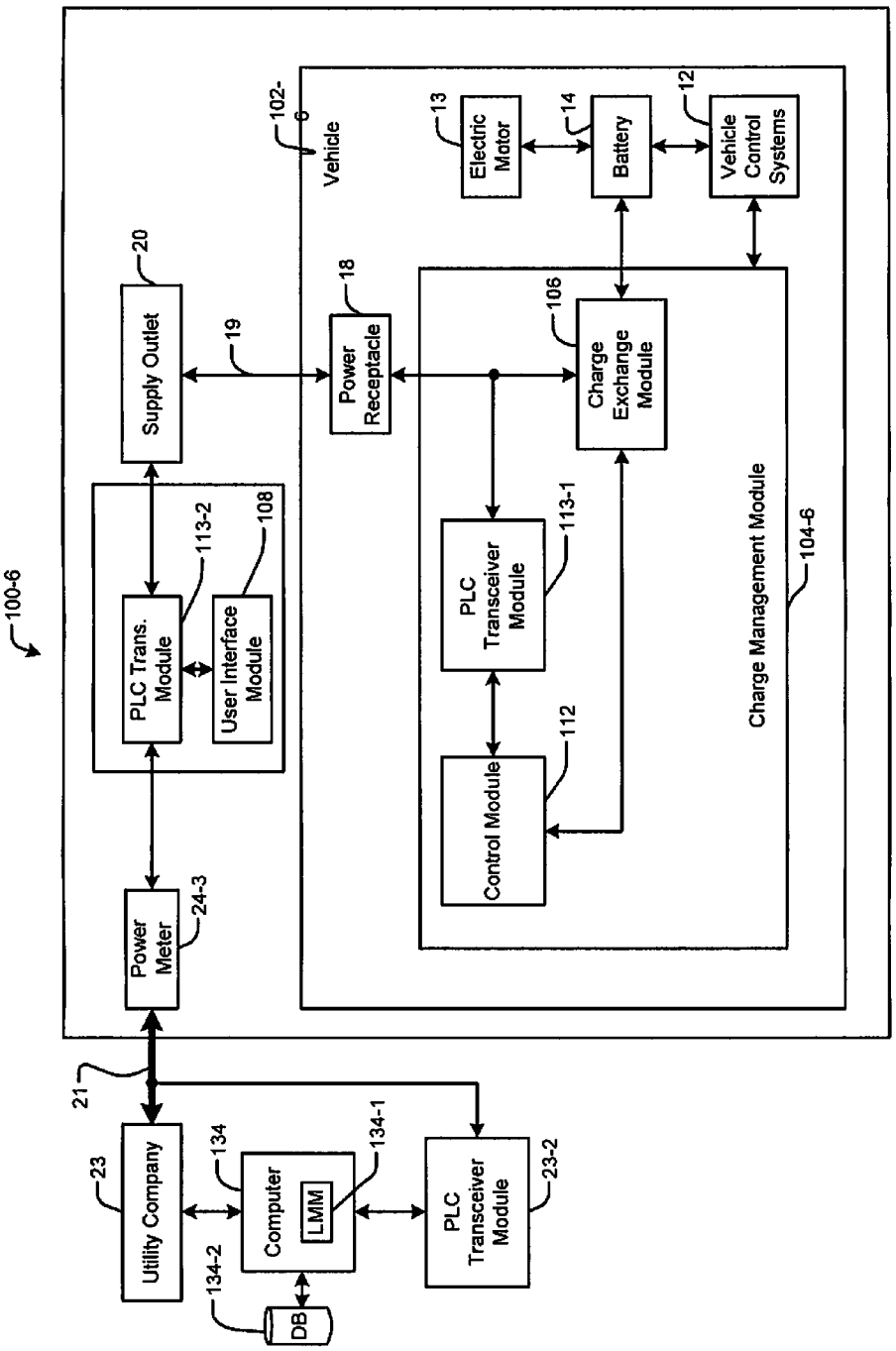
100-6
Supply Outlet
20
19
Power Meter
24-3
PLC Trans. Module
113-2
User Interface Module
108
21
Utility Company
23
134
Computer
LMM
134-1
134-2
DB
PLC Transceiver Module
23-2
102-6
Vehicle
Power Receptacle
18
Electric Motor
13
Battery
14
Vehicle Control Systems
12
Charge Exchange Module
106
PLC Transceiver Module
113-1
Control Module
112
Charge Management Module
104-6

FIG. 5B

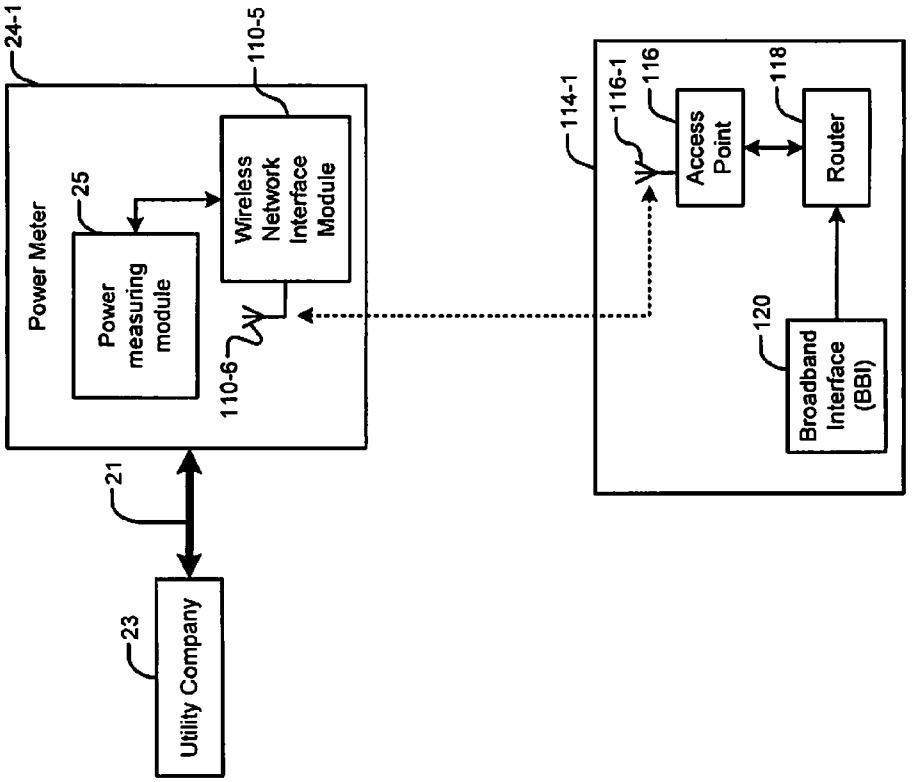
24-1
Power Meter
25
Power measuring module
110-5
Wireless Network Interface Module
110-6
21
23
Utility Company
114-1
116-1
116
Access Point
118
Router
120
Broadband Interface (BBI)

FIG. 6A

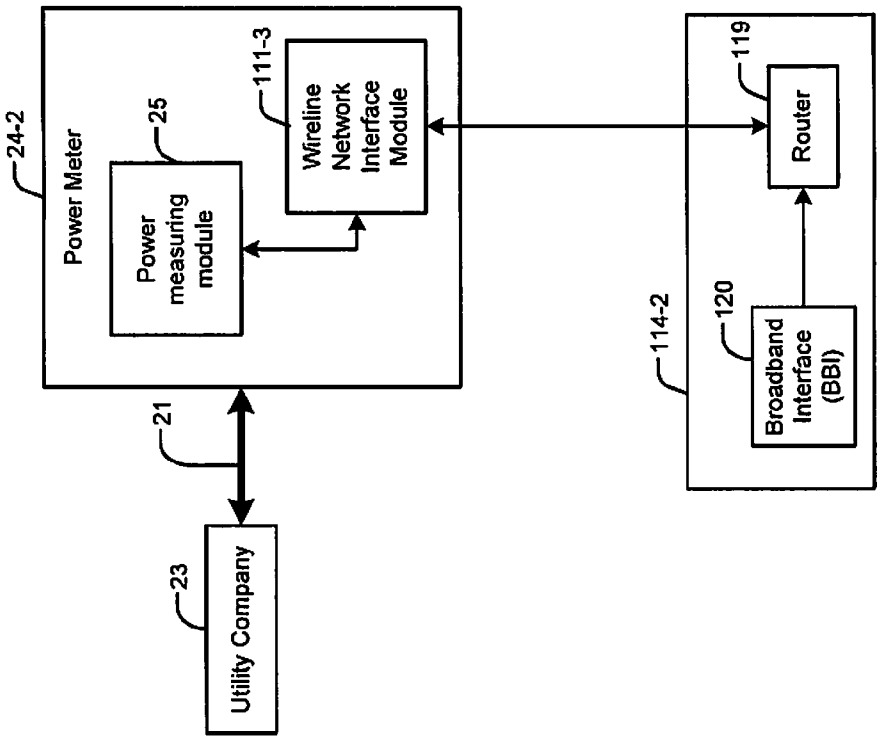
24-2
Power Meter
25
Power measuring module
111-3
Wireline Network Interface Module
21
23
Utility Company
114-2
120
Broadband Interface (BBI)
119
Router

FIG. 6B

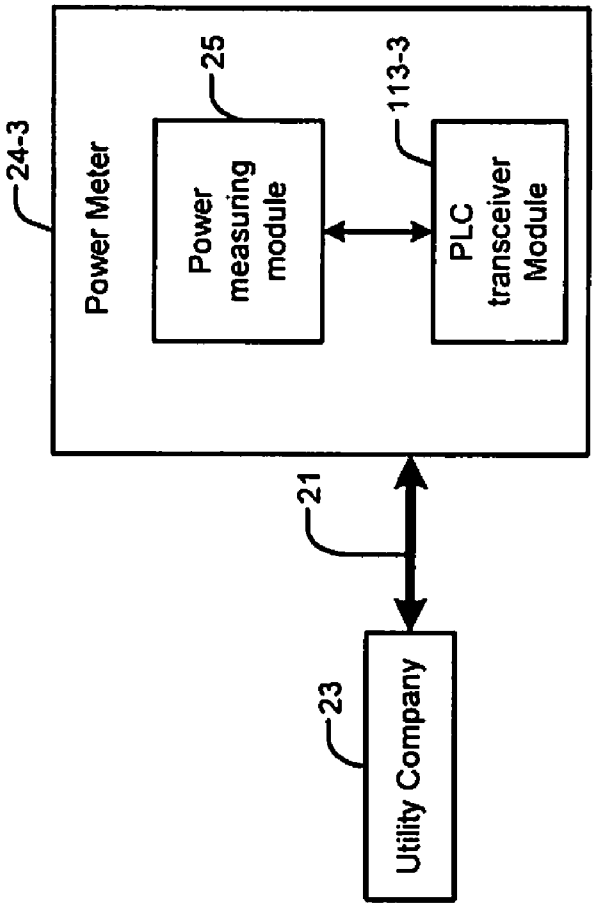
24-3
Power Meter
25
Power measuring module
113-3
PLC transceiver Module
21
23
Utility Company

FIG. 6C

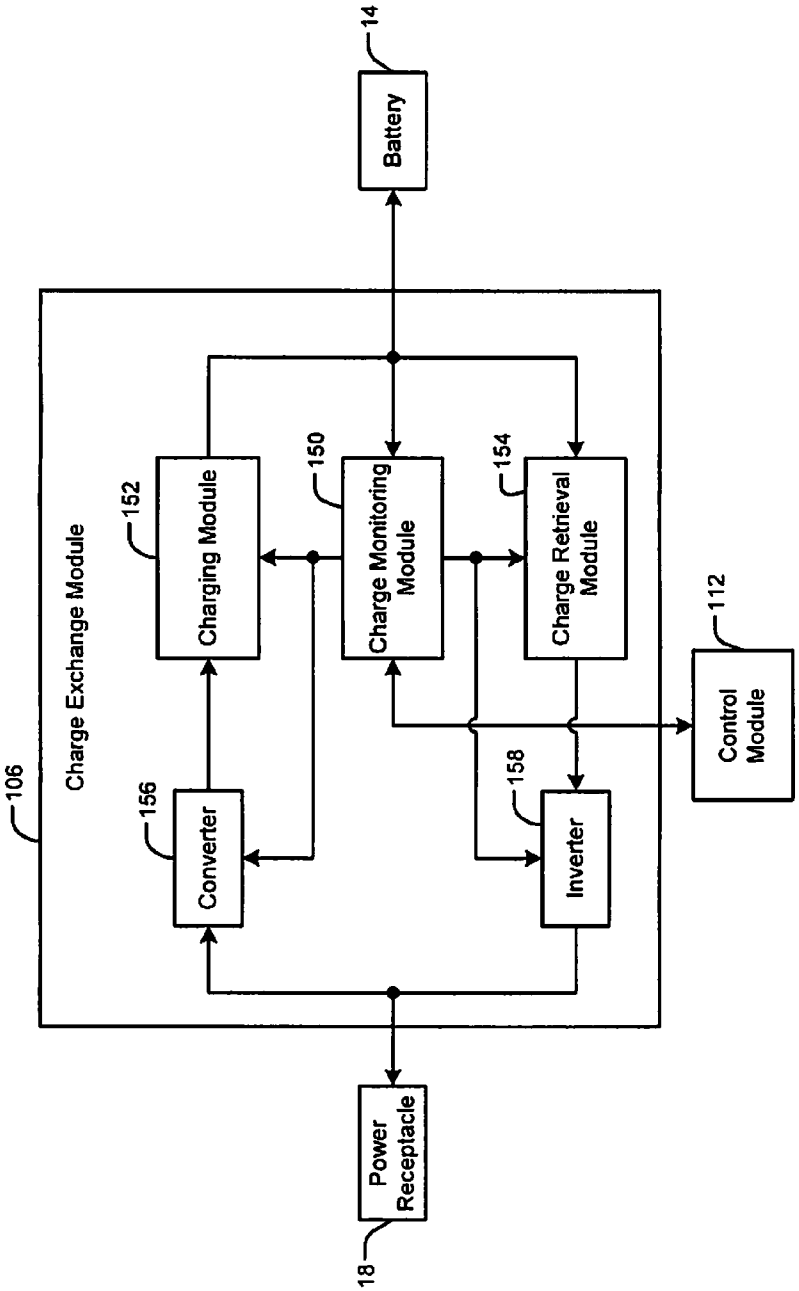
106
Charge Exchange Module
152
Charging Module
150
Charge Monitoring Module
154
Charge Retrieval Module
156
Converter
158
Inverter
14
Battery
112
Control Module
18
Power Receptacle

FIG. 7

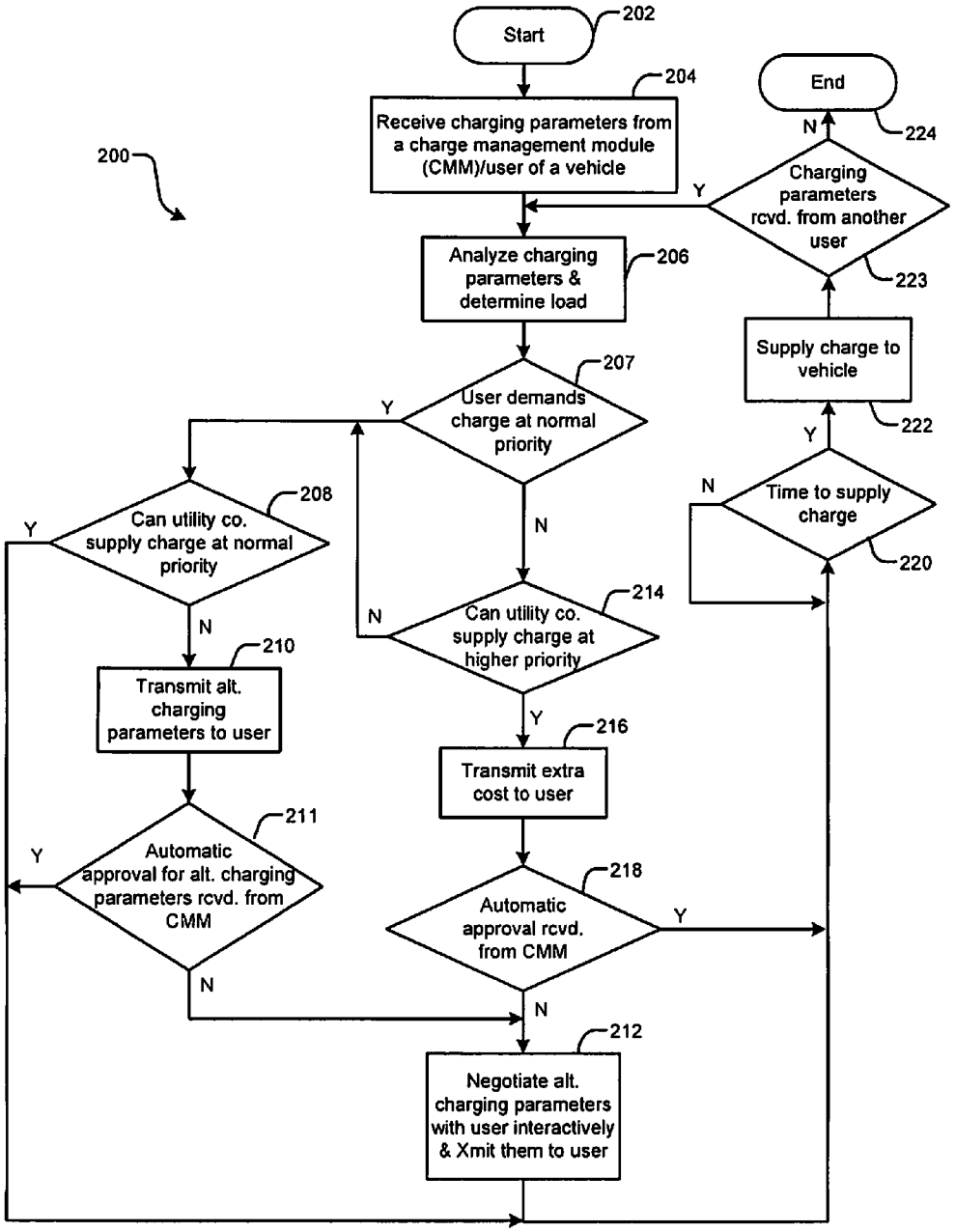
200
Start
202
Receive charging parameters from a charge management module (CMM)/user of a vehicle
204
Analyze charging parameters & determine load
206
User demands charge at normal priority
207
Y
N
Can utility co. supply charge at normal priority
208
Y
N
Transmit alt. charging parameters to user
210
Automatic approval for alt. charging parameters rcvd. from CMM
211
Y
N
Can utility co. supply charge at higher priority
214
N
Y
Transmit extra cost to user
216
Automatic approval rcvd. from CMM
218
Y
N
Negotiate alt. charging parameters with user interactively & Xmit them to user
212
Time to supply charge
220
N
Y
Supply charge to vehicle
222
Charging parameters rcvd. from another user
223
Y
N
End
224

FIG. 8A

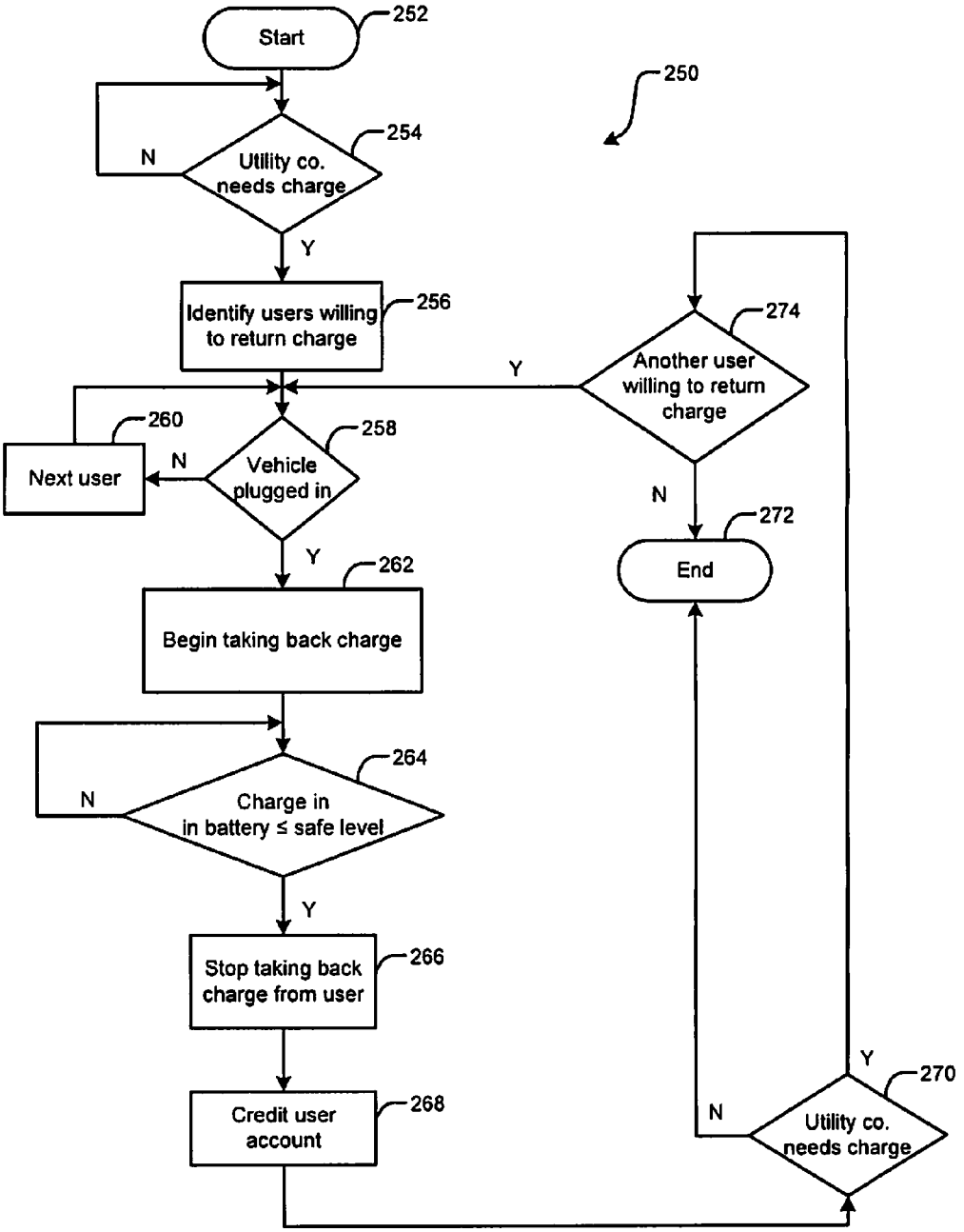
Start
252
250
Utility co. needs charge
254
N
Y
Identify users willing to return charge
256
Another user willing to return charge
274
Y
Next user
260
Vehicle plugged in
258
N
N
End
272
Y
Begin taking back charge
262
Charge in in battery ≤ safe level
264
N
Y
Stop taking back charge from user
266
Credit user account
268
Y
Utility co. needs charge
270
N

FIG. 8B

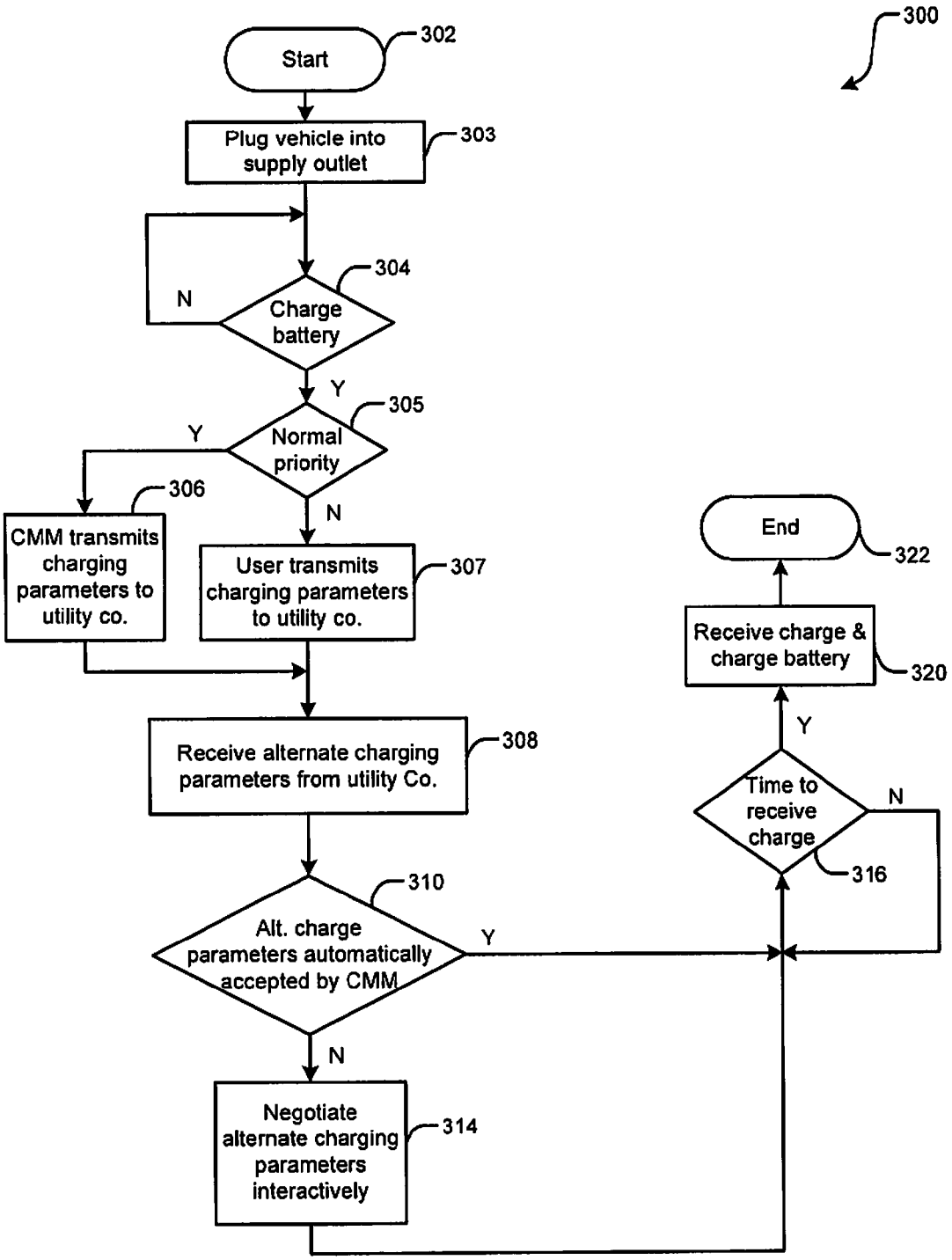
300
Start
302
Plug vehicle into supply outlet
303
Charge battery
304
N
Y
Normal priority
305
Y
N
CMM transmits charging parameters to utility co.
306
User transmits charging parameters to utility co.
307
Receive alternate charging parameters from utility Co.
308
Alt. charge parameters automatically accepted by CMM
310
Y
N
Negotiate alternate charging parameters interactively
314
Time to receive charge
316
N
Y
Receive charge & charge battery
320
End
322

FIG. 9A

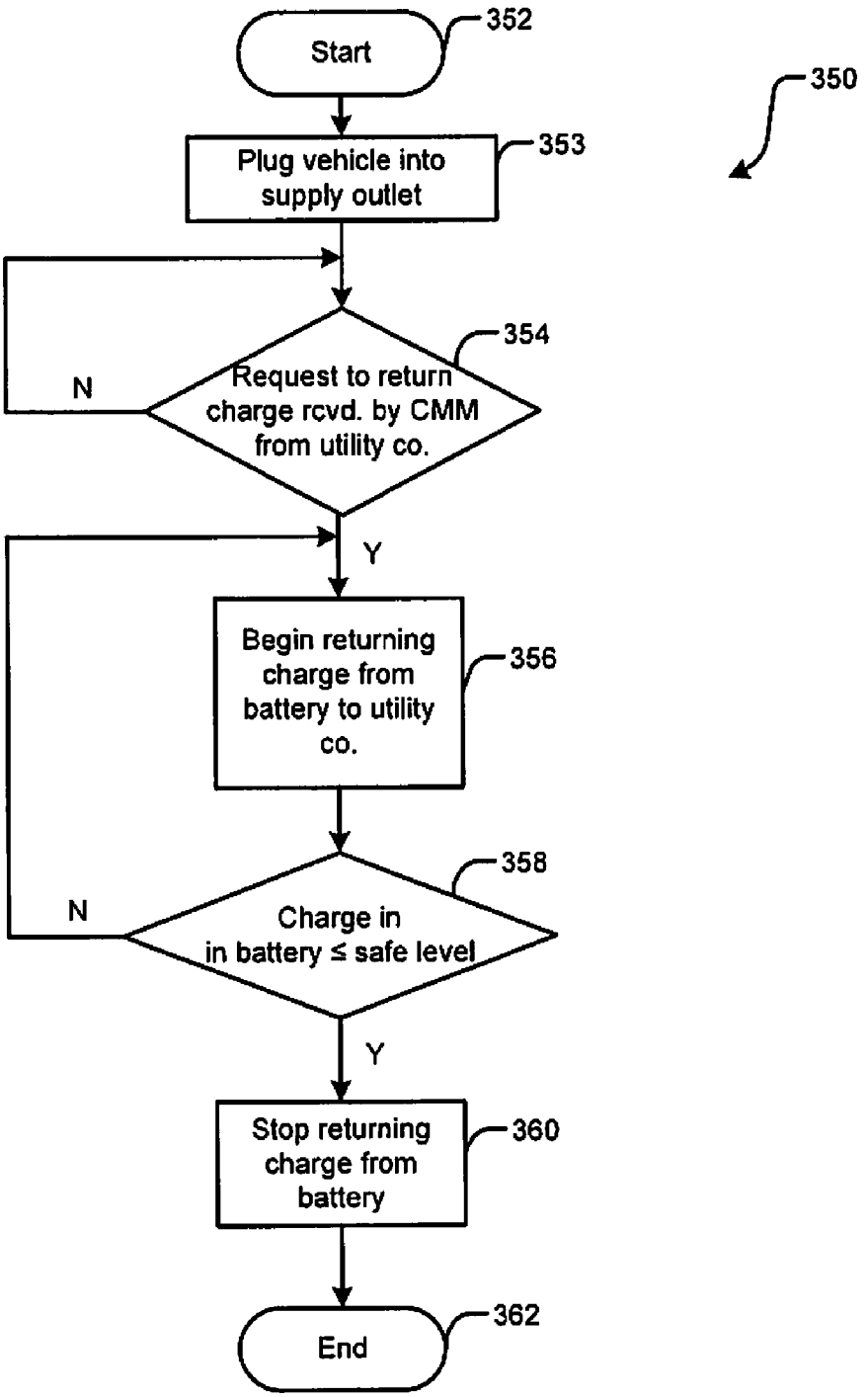
Start
352
350
Plug vehicle into supply outlet
353
Request to return charge rcvd. by CMM from utility co.
354
N
Y
Begin returning charge from battery to utility co.
356
Charge in in battery ≤ safe level
358
N
Y
Stop returning charge from battery
360
End
362

FIG. 9B

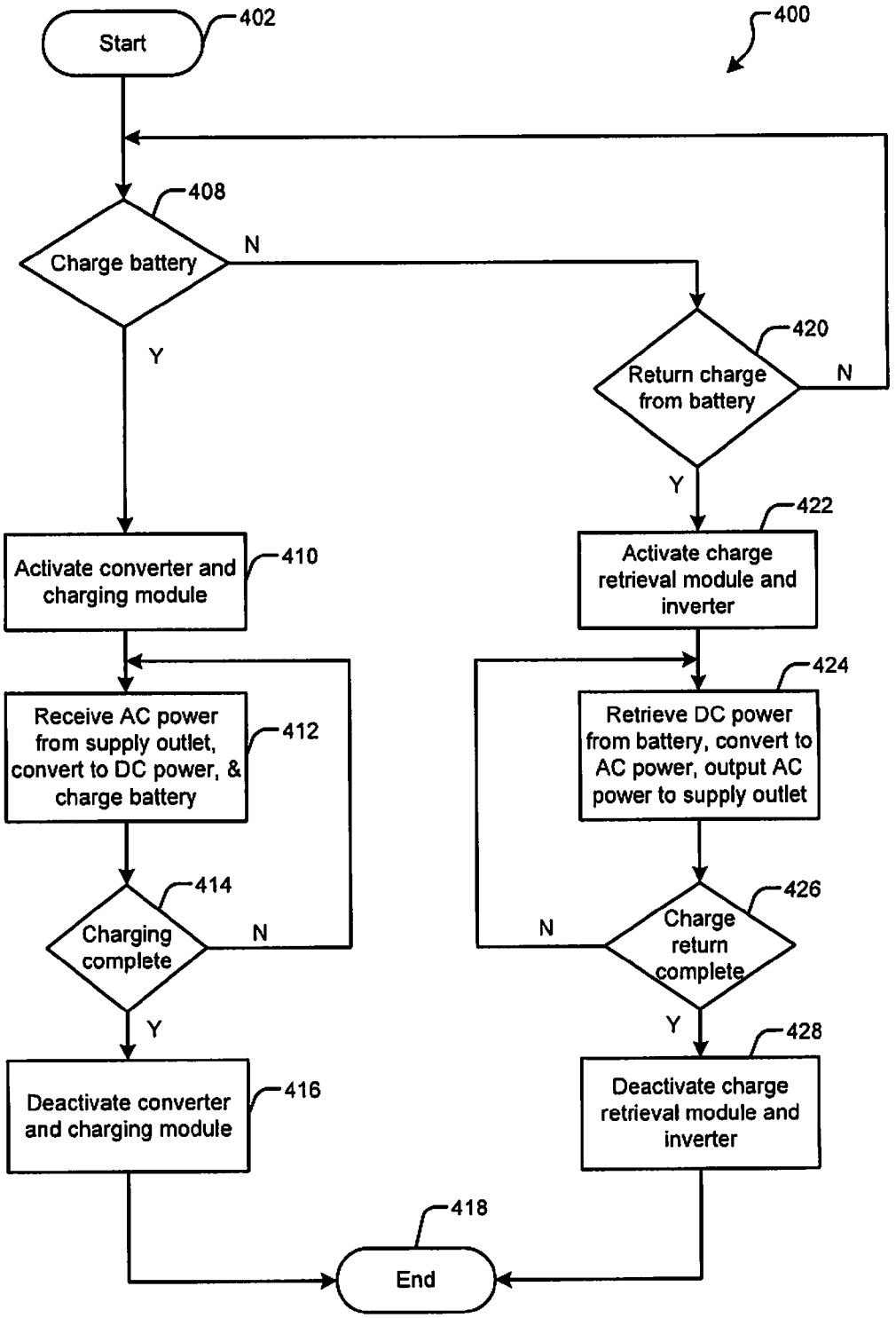
Start
402
400
408
Charge battery
N
Y
420
Return charge from battery
N
Y
422
Activate converter and charging module
410
Activate charge retrieval module and inverter
424
Receive AC power from supply outlet, convert to DC power, & charge battery
412
Retrieve DC power from battery, convert to AC power, output AC power to supply outlet
414
Charging complete
N
Y
426
Charge return complete
N
Y
428
Deactivate converter and charging module
416
Deactivate charge retrieval module and inverter
418
End

FIG. 10

PLUG-IN VEHICLE

CROSS-REFERENCE TO RELATED APPLICATIONS

[0001] This application claims the benefit of U.S. Provisional Application No. 60/891,834, filed Feb. 27, 2007, and U.S. Provisional Application No. 60/868,781, filed on Dec. 6, 2006. The disclosures of the above applications are incorporated herein by reference in their entirety.

FIELD

[0002] The present disclosure relates to vehicles, and more particularly to systems and methods for charging batteries in vehicles.

BACKGROUND

[0003] The background description provided herein is for the purpose of generally presenting the context of the disclosure. Work of the presently named inventors, to the extent it is described in this background section, as well as aspects of the description which may not otherwise qualify as prior art at the time of filing, are neither expressly nor impliedly admitted as prior art against the present disclosure.

[0004] Some vehicles are powered at least partially by electric motors. For example, purely electric vehicles rely solely on electric motors and batteries and do not include another propulsion source. Hybrid vehicles include a first propulsion source such as an engine or fuel cell and a second propulsion source such as an electric motor. Hybrid vehicles may operate using one or the other or both propulsion sources depending upon the configuration. In some vehicles, the engine is used solely to recharge the batteries and does not to produce drive power for the vehicle. In other vehicles, the engine may power the vehicle instead of or in addition to the electric motor. During operation, the vehicles deplete the electric charge that is stored in the batteries. Consequently, the batteries may need to be recharged periodically.

[0005] Referring now to FIG. **1**, a vehicle **10** may comprise one or more vehicle control systems **12** that control the operation of the vehicle **10**. For example, the vehicle control systems **12** may include a powertrain controller, a transmission controller and/or other controllers (not shown). The controllers may communicate with each other and may receive inputs from one or more sensors. The controllers generate outputs that control one or more vehicle components such as engines, electric motors, transmissions and/or other vehicle systems (not shown). An electric motor **13** may be used to propel the vehicle as previously described above. The vehicle control systems **12** and the electric motor **13** may be powered by a battery **14** during operation.

[0006] A charging module **16** may recharge the battery **14** by drawing power from a supply outlet **20**. Specifically, the vehicle **10** may include a power receptacle (i.e., a plug) **18** to receive power from the supply outlet **20** via a cable and connector **19**. The supply outlet **20** may receive power from a utility company **23** via a power distribution line **21**. The supply outlet **20** may provide the power to the vehicle **10**. A power meter **22** may measure the amount of power received by the vehicle **10** from the supply outlet **20** to recharge the battery **14**.

[0007] The recharging time of the battery **14** may vary depending on many factors. The factors may include the type of the battery **14**, the amount of charge consumed by the vehicle **10** before recharging, the rate at which power is supplied by the supply outlet **20**, etc.

SUMMARY

[0008] A system comprises a control module, a network interface module, and a charging module. The control module stores a first set of charging parameters for charging a battery in a vehicle. The network interface module transmits the first set of charging parameters to a utility company and receives a reply from the utility company. The control module generates a charge control signal based on the reply and the first set of charging parameters. The charging module charges the battery of the vehicle based on the charge control signal.

[0009] In another feature, the reply includes a second set of charging parameters that is different than the first set of charging parameters.

[0010] In another feature, the reply includes a second set of charging parameters that is the same as the first set of charging parameters.

[0011] In another feature, the first set of charging parameters includes a first time to begin charging, and the reply includes a second time to begin charging that is different than the first time.

[0012] In another feature, the network interface module comprises one of a wireline interface, a wireless interface, and a powerline carrier (PLC) interface.

[0013] In another feature, the system further comprises a converter that communicates with the charging module and that converts power from alternating current (AC) power to direct current (DC) power.

[0014] In another feature, the system further comprises a charge monitoring module that monitors a charge level of the battery and that outputs the charge level to the control module, wherein the first set of charging parameters includes the charge level.

[0015] In another feature, the system further comprises a user interface module that communicates with the control module and that allows user entry of the first set of charging parameters.

[0016] In another feature, the system further comprises a user interface module that communicates with the control module and that allows user entry of a default set of charging parameters, wherein the first set of charging parameters is based on the default set of charging parameters.

[0017] In another feature, the network interface module receives a charge return request from the utility company, and the system further comprises a charge retrieval module that selectively returns charge from the battery to the utility company based on the charge return request.

[0018] In another feature, the system further comprises an inverter that inverts the charge.

[0019] In another feature, a vehicle comprises the system and further comprises an electric motor that drives the vehicle, wherein the battery provides power to the electric motor when the electric motor drives the vehicle.

[0020] In still other features, a method comprises storing a first set of charging parameters for charging a battery in a vehicle, transmitting the first set of charging parameters to a utility company, and receiving a reply from the utility company. The method further comprises generating a charge control signal based on the reply and the first set of charging parameters and charging the battery of the vehicle based on the charge control signal.

[0021] In another feature, the reply includes a second set of charging parameters that is different than the first set of charging parameters.

[0022] In another feature, the reply includes a second set of charging parameters that is the same as the first set of charging parameters.

[0023] In another feature, the first set of charging parameters includes a first time to begin charging, and the reply includes a second time to begin charging that is different than the first time.

[0024] In another feature, the method further comprises transmitting the first set of charging parameters and receiving the reply via one of a wireline interface, a wireless interface, and a powerline carrier (PLC) interface.

[0025] In another feature, the method further comprises converting power from alternating current (AC) power to direct current (DC) power.

[0026] In another feature, the method further comprises monitoring a charge level of the battery and including the charge level in the first set of charging parameters.

[0027] In another feature, the method further comprises receiving the first set of charging parameters from a user of the vehicle.

[0028] In another feature, the method further comprises receiving a default set of charging parameters from a user of the vehicle, wherein the first set of charging parameters is based on the default set of charging parameters.

[0029] In another feature, the method further comprises receiving a charge return request from the utility company and selectively returning charge from the battery to the utility company based on the charge return request.

[0030] In another feature, the method further comprises receiving the charge return request via one of a wireline interface, a wireless interface, and a powerline carrier (PLC) interface.

[0031] In another feature, the method further comprises inverting the charge.

[0032] In another feature, the method further comprises providing power from the battery to an electric motor and driving the vehicle using the electric motor.

[0033] In still other features, a system comprises control means for storing a first set of charging parameters for charging a battery in a vehicle and network interface means for transmitting the first set of charging parameters to a utility company and receiving a reply from the utility company. The control means generates a charge control signal based on the reply and the first set of charging parameters. The system further comprises charging means for charging the battery of the vehicle based on the charge control signal.

[0034] In another feature, the reply includes a second set of charging parameters that is different than the first set of charging parameters.

[0035] In another feature, the reply includes a second set of charging parameters that is the same as the first set of charging parameters.

[0036] In another feature, the first set of charging parameters includes a first time to begin charging, and wherein the reply includes a second time to begin charging that is different than the first time.

[0037] In another feature, the network interface means comprises one of wireline, wireless, and powerline carrier (PLC) interface means for transmitting and receiving data.

[0038] In another feature, the system further comprises converter means for converting power from alternating current (AC) power to direct current (DC) power.

[0039] In another feature, the system further comprises charge monitoring means for monitoring a charge level of the battery and communicating the charge level to the control means, wherein the first set of charging parameters includes the charge level.

[0040] In another feature, the system further comprises user interface means for inputting the first set of charging parameters, wherein the user interface means communicates with the control means.

[0041] In another feature, the system further comprises user interface means for inputting a default set of charging parameters, wherein the first set of charging parameters is based on the default set of charging parameters, and wherein the user interface means communicates with the control means.

[0042] In another feature, the network interface means receives a charge return request from the utility company, and the system further comprises charge retrieval means for selectively returning charge from the battery to the utility company based on the charge return request.

[0043] In another feature, the system further comprises inverter means for inverting the charge.

[0044] In another feature, a vehicle comprises the system and further comprises an electric motor that drives the vehicle, wherein the battery provides power to the electric motor when the electric motor drives the vehicle.

[0045] In still other features, a computer program executed by a processor comprises storing a first set of charging parameters for charging a battery in a vehicle, transmitting the first set of charging parameters to a utility company, and receiving a reply from the utility company. The computer program further comprises generating a charge control signal based on the reply and the first set of charging parameters and charging the battery of the vehicle based on the charge control signal.

[0046] In another feature, the reply includes a second set of charging parameters that is different than the first set of charging parameters.

[0047] In another feature, the reply includes a second set of charging parameters that is the same as the first set of charging parameters.

[0048] In another feature, the first set of charging parameters includes a first time to begin charging, and the reply includes a second time to begin charging that is different than the first time.

[0049] In another feature, the computer program further comprises transmitting the first set of charging parameters and receiving the reply via one of a wireline interface, a wireless interface, and a powerline carrier (PLC) interface.

[0050] In another feature, the computer program further comprises converting power from alternating current (AC) power to direct current (DC) power.

[0051] In another feature, the computer program further comprises monitoring a charge level of the battery and including the charge level in the first set of charging parameters.

[0052] In another feature, the computer program further comprises receiving the first set of charging parameters from a user of the vehicle.

[0053] In another feature, the computer program further comprises receiving a default set of charging parameters from a user of the vehicle, wherein the first set of charging parameters is based on the default set of charging parameters.

[0054] In another feature, the computer program further comprises receiving a charge return request from the utility company and selectively returning charge from the battery to the utility company based on the charge return request.

[0055] In another feature, the computer program further comprises receiving the charge return request via one of a wireline interface, a wireless interface, and a powerline carrier (PLC) interface.

[0056] In another feature, the computer program further comprises inverting the charge.

[0057] In another feature, the computer program further comprises providing power from the battery to an electric motor and driving the vehicle using the electric motor.

[0058] In still other features, a system comprises a network interface module, a control module, and a charge retrieval module. The network interface module receives a charge return request from a utility company for returning charge from a battery in a vehicle to the utility company. The control module stores charge return parameters and generates a charge return control signal based on the charge return request and the charge return parameters. The charge retrieval module returns charge from the battery to the utility company based on the charge return control signal.

[0059] In another feature, when the charge return request is consistent with the charge return parameters, the control module and the charge retrieval module return the charge to the utility company.

[0060] In another feature, when the charge return request is inconsistent with the charge return parameters, the control module and the network interface module decline the charge return request.

[0061] In another feature, when the charge return request is inconsistent with the charge return parameters, the control module negotiates alternate charge return parameters.

[0062] In another feature, the charge return request includes a time to begin charge return.

[0063] In another feature, the system further comprises a user interface for allowing user entry to define the charge return parameters.

[0064] In another feature, the charge return parameters include default charge return parameters.

[0065] In another feature, the system further comprises a charge monitoring module that determines a charge level of the battery. The control module evaluates the charge return request based on the charge level of the battery. The charge retrieval module returns the charge from the battery when the charge level is above a predetermined minimum charge level.

[0066] In another feature, the network interface module comprises one of a wireline interface, a wireless interface, and a powerline carrier (PLC) interface.

[0067] In another feature, the system further comprises an inverter that communicates with the charge retrieval module and that inverts the charge.

[0068] In another feature, the control module stores a first set of charging parameters for charging the battery, and the network interface module transmits the first set of charging parameters to the utility company.

[0069] In another feature, when the network interface module receives a reply from the utility company, the control module generates a charge control signal based on the reply and the first set of charging parameters, and the system further comprises a charging module that receives power from the utility company and charges the battery based on the charge control signal.

[0070] In another feature, the system further comprises a converter that communicates with the charging module and that converts the power from alternating current (AC) power to direct current (DC) power.

[0071] In another feature, a vehicle comprises the system and further comprises an electric motor that drives the vehicle, wherein the battery provides power to the electric motor when the electric motor drives the vehicle.

[0072] In still other features, a method comprises storing charge return parameters for returning charge from a battery in a vehicle to a utility company, receiving a charge return request from the utility company, and generating a charge return control signal based on the charge return request and the charge return parameters. The method further comprises returning charge from the battery to the utility company based on the charge return control signal.

[0073] In another feature, the method further comprises returning the charge to the utility company when the charge return request is consistent with the charge return parameters.

[0074] In another feature, the method further comprises declining the charge return request when the charge return request is inconsistent with the charge return parameters.

[0075] In another feature, the method further comprises negotiating alternate charge return parameters when the charge return request is inconsistent with the charge return parameters.

[0076] In another feature, the charge return request includes a time to begin charge return.

[0077] In another feature, the method further comprises receiving input from a user of the vehicle and generating the charge return parameters based on the input.

[0078] In another feature, the charge return parameters include default charge return parameters.

[0079] In another feature, the method further comprises determining a charge level of the battery. The method further comprises evaluating the charge return request based on the charge level of the battery. The method further comprises returning the charge from the battery when the charge level is above a predetermined minimum charge level.

[0080] In another feature, the method further comprises receiving the charge return request and negotiating the alternate charge return parameters via one of a wireline interface, a wireless interface, and a powerline carrier (PLC) interface.

[0081] In another feature, the method further comprises inverting the charge.

[0082] In another feature, the method further comprises storing a first set of charging parameters for charging the battery and transmitting the first set of charging parameters to the utility company.

[0083] In another feature, the method further comprises receiving a reply from the utility company, generating a charge control signal based on the reply and the first set of charging parameters, receiving power from the utility company, and charging the battery based on the charge control signal.

[0084] In another feature, the method further comprises converting the power from alternating current (AC) power to direct current (DC) power.

[0085] In another feature, the method further comprises at least one of transmitting the first set of charging parameters and receiving the reply via one of a wireline interface, a wireless interface, and a powerline carrier (PLC) interface.

[0086] In another feature, the method further comprises providing power from the battery to an electric motor and driving the vehicle using the electric motor.

[0087] In still other features, a system comprises network interface means for receiving a charge return request from a utility company for returning charge from a battery in a vehicle to the utility company. The system further comprises control means for storing charge return parameters and generating a charge return control signal based on the charge return request and the charge return parameters. The system further comprises charge retrieval means for returning charge from the battery to the utility company based on the charge return control signal.

[0088] In another feature, when the charge return request is consistent with the charge return parameters, the control means and the charge retrieval means return the charge to the utility company.

[0089] In another feature, when the charge return request is inconsistent with the charge return parameters, the control means and the network interface means decline the charge return request.

[0090] In another feature, when the charge return request is inconsistent with the charge return parameters, the control means negotiates alternate charge return parameters.

[0091] In another feature, the charge return request includes a time to begin charge return.

[0092] In another feature, the system further comprises user interface means for allowing user entry to define the charge return parameters.

[0093] In another feature, the charge return parameters include default charge return parameters.

[0094] In another feature, the system further comprises charge monitoring means for determining a charge level of the battery. The control means evaluates the charge return request based on the charge level of the battery. The charge retrieval means returns the charge from the battery when the charge level is above a predetermined minimum charge level.

[0095] In another feature, the network interface means comprises one of wireline, wireless, and powerline carrier (PLC) interface means for transmitting and receiving data.

[0096] In another feature, the system further comprises inverter means for inverting the charge.

[0097] In another feature, the control means stores a first set of charging parameters for charging the battery in the vehicle, and the network interface means transmits the first set of charging parameters to the utility company.

[0098] In another feature, when the network interface means receives a reply from the utility company, the control means generates a charge control signal based on the reply and the first set of charging parameters, and the system further comprises charging means for receiving power from the utility company and charging the battery based on the charge control signal.

[0099] In another feature, the system further comprises converter means for converting the power from alternating current (AC) power to direct current (DC) power.

[0100] In another feature, a vehicle comprises the system and further comprises an electric motor that drives the vehicle, wherein the battery provides power to the electric motor when the electric motor drives the vehicle.

[0101] In still other features, a computer program executed by a processor comprises storing charge return parameters for returning charge from a battery in a vehicle to a utility company, receiving a charge return request from the utility company, and generating a charge return control signal based on the charge return request and the charge return parameters. The computer program further comprises returning charge from the battery to the utility company based on the charge return control signal.

[0102] In another feature, the computer program further comprises returning the charge to the utility company when the charge return request is consistent with the charge return parameters.

[0103] In another feature, the computer program further comprises declining the charge return request when the charge return request is inconsistent with the charge return parameters.

[0104] In another feature, the computer program further comprises negotiating alternate charge return parameters when the charge return request is inconsistent with the charge return parameters.

[0105] In another feature, the charge return request includes a time to begin charge return.

[0106] In another feature, the computer program further comprises receiving input from a user of the vehicle and generating the charge return parameters based on the input.

[0107] In another feature, the charge return parameters include default charge return parameters.

[0108] In another feature, the computer program further comprises determining a charge level of the battery. The computer program further comprises evaluating the charge return request based on the charge level of the battery. The computer program further comprises returning the charge from the battery when the charge level is above a predetermined minimum charge level.

[0109] In another feature, the computer program further comprises receiving the charge return request and negotiating the alternate charge return parameters via one of a wireline interface, a wireless interface, and a powerline carrier (PLC) interface.

[0110] In another feature, the computer program further comprises inverting the charge.

[0111] In another feature, the computer program further comprises storing a first set of charging parameters for charging the battery and transmitting the first set of charging parameters to the utility company.

[0112] In another feature, the computer program further comprises receiving a reply from the utility company, generating a charge control signal based on the reply and the first set of charging parameters, receiving power from the utility company, and charging the battery based on the charge control signal.

[0113] In another feature, the computer program further comprises converting the power from alternating current (AC) power to direct current (DC) power.

[0114] In another feature, the computer program further comprises at least one of transmitting the first set of charging parameters and receiving the reply via one of a wireline interface, a wireless interface, and a powerline carrier (PLC) interface.

[0115] In another feature, the computer program further comprises providing power from the battery to an electric motor and driving the vehicle using the electric motor.

[0116] In still other features, a system comprises a network interface module and a load management module. The network interface module receives N first sets of charging parameters from N vehicles for charging batteries in the N vehicles, respectively, where N is an integer greater than 1.

The load management module analyzes the N first sets of charging parameters, determines a schedule for charging the batteries of the N vehicles, and generates N replies for the N vehicles based on the schedule. The network interface module transmits the N replies to the N vehicles, respectively.

[0117] In another feature, one or more of the N replies specify charging parameters that are different than corresponding ones of the N first sets of charging parameters.

[0118] In another feature, at least one of the N first sets of charging parameters includes a first time to begin charging, and a corresponding one of the N replies includes a second time to begin charging that is different than the first time.

[0119] In another feature, one or more of the N first sets of charging parameters include charge levels and requested charge completion times for the batteries of corresponding ones of the N vehicles.

[0120] In another feature, the load management module selectively retrieves charge from the batteries of selected ones of the N vehicles.

[0121] In another feature, the load management module identifies the selected ones of the N vehicles based on charge return parameters provided by the N vehicles.

[0122] In another feature, the load management module generates the schedule based on the charge levels and the requested charge completion times.

[0123] In another feature, one or more of the N first sets of charging parameters include requested charge completion times, and the load management module generates the schedule based on the requested charge completion times.

[0124] In another feature, the load management module determines N recharging payment amounts for the N vehicles based on the N first sets of charging parameters and the N replies, respectively.

[0125] In another feature, the load management module negotiates at least one of the N replies with a corresponding one of the N vehicles.

[0126] In another feature, one or more of the N first sets of charging parameters include charge levels of the batteries in corresponding ones of the N vehicles, and the load management module selectively retrieves charge from the batteries based on the charge levels.

[0127] In another feature, the network interface module comprises one of a wireline interface, a wireless interface, and a powerline carrier (PLC) interface.

[0128] In still other features, a method comprises receiving N first sets of charging parameters from N vehicles for charging batteries in the N vehicles, respectively, where N is an integer greater than 1. The method further comprises analyzing the N first sets of charging parameters, determining a schedule for charging the batteries of the N vehicles, generating N replies for the N vehicles based on the schedule, and transmitting the N replies to the N vehicles, respectively.

[0129] In another feature, the method further comprises specifying in one or more of the N replies charging parameters that are different than corresponding ones of the N first sets of charging parameters.

[0130] In another feature, at least one of the N first sets of charging parameters includes a first time to begin charging, and a corresponding one of the N replies includes a second time to begin charging that is different than the first time.

[0131] In another feature, the method further comprises including in one or more of the N first sets of charging parameters charge levels and requested charge completion times for the batteries in corresponding ones of the N vehicles.

[0132] In another feature, the method further comprises selectively retrieving charge from the batteries of selected ones of the N vehicles.

[0133] In another feature, the method further comprises identifying the selected ones of the N vehicles based on charge return parameters provided by the N vehicles.

[0134] In another feature, the method further comprises generating the schedule based on the charge levels and the requested charge completion times.

[0135] In another feature, the method further comprises including requested charge completion times in one or more of the N first sets of charging parameters and generating the schedule based on the requested charge completion times.

[0136] In another feature, the method further comprises determining N recharging payment amounts for the N vehicles based on the N first sets of charging parameters and the N replies, respectively.

[0137] In another feature, the method further comprises negotiating at least one of the N replies with a corresponding one of the N vehicles.

[0138] In another feature, the method further comprises including charge levels of the batteries in one or more of the N first sets of charging parameters and selectively retrieving charge from the batteries based on the charge levels.

[0139] In another feature, the method further comprises receiving the N first sets of charging parameters, transmitting the N replies, and negotiating the at least one of the N replies via one of a wireline interface, a wireless interface, and a powerline carrier (PLC) interface.

[0140] In still other features, a system comprises network interface means for receiving N first sets of charging parameters from N vehicles for charging batteries in the N vehicles, respectively, where N is an integer greater than 1. The system further comprises load management means for analyzing the N first sets of charging parameters, determining a schedule for charging the batteries of the N vehicles, and generating N replies for the N vehicles based on the schedule. The network interface means transmits the N replies to the N vehicles, respectively.

[0141] In another feature, one or more of the N replies specify charging parameters that are different than corresponding ones of the N first sets of charging parameters.

[0142] In another feature, at least one of the N first sets of charging parameters includes a first time to begin charging, and a corresponding one of the N replies includes a second time to begin charging that is different than the first time.

[0143] In another feature, one or more of the N first sets of charging parameters include charge levels and requested charge completion times for the batteries of corresponding ones of the N vehicles.

[0144] In another feature, the load management means selectively retrieves charge from the batteries of selected ones of the N vehicles.

[0145] In another feature, the load management means identifies the selected ones of the N vehicles based on charge return parameters provided by the N vehicles.

[0146] In another feature, the load management means generates the schedule based on the charge levels and the requested charge completion times.

[0147] In another feature, one or more of the N first sets of charging parameters include requested charge completion times, and the load management means generates the schedule based on the requested charge completion times.

[0148] In another feature, the load management means determines N recharging payment amounts for the N vehicles based on the N first sets of charging parameters and the N replies, respectively.

[0149] In another feature, the load management means negotiates at least one of the N replies with a corresponding one of the N vehicles.

[0150] In another feature, one or more of the N first sets of charging parameters include charge levels of the batteries of corresponding ones of the N vehicles, and the load management means selectively retrieves charge from the batteries based on the charge levels.

[0151] In another feature, the network interface means comprises one of wireline, wireless, and powerline carrier (PLC) interface means for transmitting and receiving data.

[0152] In still other features, a computer program executed by a processor comprises receiving N first sets of charging parameters from N vehicles for charging batteries in the N vehicles, respectively, where N is an integer greater than 1. The computer program further comprises analyzing the N first sets of charging parameters, determining a schedule for charging the batteries of the N vehicles, generating N replies for the N vehicles based on the schedule, and transmitting the N replies to the N vehicles, respectively.

[0153] In another feature, the computer program further comprises specifying in one or more of the N replies charging parameters that are different than corresponding ones of the N first sets of charging parameters.

[0154] In another feature, at least one of the N first sets of charging parameters includes a first time to begin charging, and a corresponding one of the N replies includes a second time to begin charging that is different than the first time.

[0155] In another feature, the computer program further comprises including in one or more of the N first sets of charging parameters charge levels and requested charge completion times for the batteries in corresponding ones of the N vehicles.

[0156] In another feature, the computer program further comprises selectively retrieving charge from the batteries of selected ones of the N vehicles.

[0157] In another feature, the computer program further comprises identifying the selected ones of the N vehicles based on charge return parameters provided by the N vehicles.

[0158] In another feature, the computer program further comprises generating the schedule based on the charge levels and the requested charge completion times.

[0159] In another feature, the computer program further comprises including requested charge completion times in one or more of the N first sets of charging parameters and generating the schedule based on the requested charge completion times.

[0160] In another feature, the computer program further comprises determining N recharging payment amounts for the N vehicles based on the N first sets of charging parameters and the N replies, respectively.

[0161] In another feature, the computer program further comprises negotiating at least one of the N replies with a corresponding one of the N vehicles.

[0162] In another feature, the computer program further comprises including charge levels of the batteries in one or more of the N first sets of charging parameters and selectively retrieving charge from the batteries based on the charge levels.

[0163] In another feature, the computer program further comprises receiving the N first sets of charging parameters, transmitting the N replies, and negotiating the at least one of the N replies via one of a wireline interface, a wireless interface, and a powerline carrier (PLC) interface.

[0164] In still other features, a system comprises a network interface module and a load management module. The network interface module receives N first sets of charging parameters from N vehicles for charging batteries in the N vehicles, respectively, where N is an integer greater than 1. At least one of the N first sets of charging parameters for at least one of the N vehicles includes charge return parameters. The load management module selectively retrieves charge from the batteries of the at least one of the N vehicles based on the charge return parameters.

[0165] In another feature, the load management module analyzes the N first sets of charging parameters, determines a schedule for charging of the N vehicles, and generates N replies for the N vehicles based on the schedule, respectively.

[0166] In another feature, the network interface module transmits the N replies to the N vehicles, respectively.

[0167] In another feature, one or more of the N replies specify charging parameters that are different than corresponding ones of the N first sets of charging parameters.

[0168] In another feature, at least one of the N first sets of charging parameters includes a first time to begin charging, and a corresponding one of the N replies includes a second time to begin charging that is different than the first time.

[0169] In another feature, one or more of the N first sets of charging parameters include charge levels of the batteries of corresponding ones of the N vehicles. The load management module generates the schedule based on the charge levels.

[0170] In another feature, one or more of the N first sets of charging parameters include requested charge completion times, and the load management module generates the schedule based on the requested charge completion times.

[0171] In another feature, the load management module determines N recharging payment amounts for the N vehicles based on the N first sets of charging parameters and the N replies, respectively.

[0172] In another feature, the load management module negotiates at least one of the N replies with a corresponding one of the N vehicles.

[0173] In another feature, at least one of the N first sets of charging parameters includes respective charge levels of the batteries, and the load management module selectively retrieves charge from the batteries based on the charge level.

[0174] In another feature, the network interface module comprises one of a wireline interface, a wireless interface, and a powerline carrier (PLC) interface.

[0175] In still other features, a method comprises receiving N first sets of charging parameters from N vehicles for charging batteries in the N vehicles, respectively, where N is an integer greater than 1. At least one of the N first sets of charging parameters for at least one of the N vehicles includes charge return parameters. The method further comprises selectively retrieving charge from the batteries of the at least one of the N vehicles based on the charge return parameters.

[0176] In another feature, the method further comprises analyzing the N first sets of charging parameters, determining a schedule for charging of the N vehicles, and generating N replies for the N vehicles based on the schedule, respectively.

[0177] In another feature, the method further comprises transmitting the N replies to the N vehicles, respectively.

[0178] In another feature, the method further comprises specifying in one or more of the N replies charging parameters that are different than corresponding ones of the N first sets of charging parameters.

[0179] In another feature, at least one of the N first sets of charging parameters includes a first time to begin charging, and a corresponding one of the N replies includes a second time to begin charging that is different than the first time.

[0180] In another feature, the method further comprises including charge levels of one or more of the batteries in corresponding ones of the N first sets of charging parameters. The method further comprises generating the schedule based on the charge levels.

[0181] In another feature, the method further comprises including requested charge completion times in one or more of the N first sets of charging parameters and generating the schedule based on the requested charge completion times.

[0182] In another feature, the method further comprises determining recharging payment amounts for the N vehicles based on the N first sets of charging parameters and the N replies, respectively.

[0183] In another feature, the method further comprises negotiating at least one of the N replies with a corresponding one of the N vehicles.

[0184] In another feature, the method further comprises including charge levels of the batteries in one or more of the N first sets of charging parameters and selectively retrieving charge from the batteries based on the charge levels.

[0185] In another feature, the method further comprises receiving the N first sets of charging parameters, transmitting the N replies, and negotiating the at least one of the N replies via one of a wireline interface, a wireless interface, and a powerline carrier (PLC) interface.

[0186] In still other features, a system comprises network interface means for receiving N first sets of charging parameters from N vehicles for charging batteries in the N vehicles, respectively, where N is an integer greater than 1. At least one of the N first sets of charging parameters for at least one of the N vehicles includes charge return parameters. The system further comprises load management means for selectively retrieving charge from the batteries of the at least one of the N vehicles based on the charge return parameters.

[0187] In another feature, the load management means analyzes the N first sets of charging parameters, determines a schedule for charging of the N vehicles, and generates N replies for the N vehicles based on the schedule, respectively.

[0188] In another feature, the network interface means transmits the N replies to the N vehicles, respectively.

[0189] In another feature, one or more of the N replies specify charging parameters that are different than corresponding ones of the N first sets of charging parameters.

[0190] In another feature, at least one of the N first sets of charging parameters includes a first time to begin charging, and a corresponding one of the N replies includes a second time to begin charging that is different than the first time.

[0191] In another feature, one or more of the N first sets of charging parameters include charge levels of the batteries of corresponding ones of the N vehicles. The load management means generates the schedule based on the charge levels.

[0192] In another feature, one or more of the N first sets of charging parameters include requested charge completion times, and the load management means generates the schedule based on the requested charge completion times.

[0193] In another feature, the load management means determines N recharging payment amounts for the N vehicles based on the N first sets of charging parameters and the N replies, respectively.

[0194] In another feature, the load management means negotiates at least one of the N replies with a corresponding one of the N vehicles.

[0195] In another feature, at least one of the N first sets of charging parameters includes respective charge levels of the batteries, and the load management means selectively retrieves charge from the batteries based on the charge level.

[0196] In another feature, the network interface means comprises one of wireline, wireless, and powerline carrier (PLC) interface means for transmitting and receiving data.

[0197] In still other features, a computer program executed by a processor comprises receiving N first sets of charging parameters from N vehicles for charging batteries in the N vehicles, respectively, where N is an integer greater than 1. At least one of the N first sets of charging parameters for at least one of the N vehicles includes charge return parameters. The computer program further comprises selectively retrieving charge from the batteries of the at least one of the N vehicles based on the charge return parameters.

[0198] In another feature, the computer program further comprises analyzing the N first sets of charging parameters, determining a schedule for charging of the N vehicles, and generating N replies for the N vehicles based on the schedule, respectively.

[0199] In another feature, the computer program further comprises transmitting the N replies to the N vehicles, respectively.

[0200] In another feature, the computer program further comprises specifying in one or more of the N replies charging parameters that are different than corresponding ones of the N first sets of charging parameters.

[0201] In another feature, at least one of the N first sets of charging parameters includes a first time to begin charging, and a corresponding one of the N replies includes a second time to begin charging that is different than the first time.

[0202] In another feature, the computer program further comprises including charge levels of one or more of the batteries in corresponding ones of the N first sets of charging parameters. The computer program further comprises generating the schedule based on the charge levels.

[0203] In another feature, the computer program further comprises including requested charge completion times in one or more of the N first sets of charging parameters and generating the schedule based on the requested charge completion times.

[0204] In another feature, the computer program further comprises determining recharging payment amounts for the N vehicles based on the N first sets of charging parameters and the N replies, respectively.

[0205] In another feature, the computer program further comprises negotiating at least one of the N replies with a corresponding one of the N vehicles.

[0206] In another feature, the computer program further comprises including charge levels of the batteries in one or more of the N first sets of charging parameters and selectively retrieving charge from the batteries based on the charge levels.

[0207] In another feature, the computer program further comprises receiving the N first sets of charging parameters, transmitting the N replies, and negotiating the at least one of

the N replies via one of a wireline interface, a wireless interface, and a powerline carrier (PLC) interface.

[0208] In still other features, the systems and methods described above are implemented by a computer program executed by one or more processors. The computer program can reside on a computer readable medium such as but not limited to memory, non-volatile data storage and/or other suitable tangible storage mediums.

[0209] Further areas of applicability of the present disclosure will become apparent from the detailed description provided hereinafter. It should be understood that the detailed description and specific examples, while indicating the preferred embodiment of the disclosure, are intended for purposes of illustration only and are not intended to limit the scope of the disclosure.

BRIEF DESCRIPTION OF THE DRAWINGS

[0210] The present disclosure will become more fully understood from the detailed description and the accompanying drawings, wherein:

[0211] FIG. **1** depicts a vehicle according to the prior art;

[0212] FIG. **2** depicts vehicles at multiple locations receiving power from a utility company to charge vehicle batteries;

[0213] FIG. **3**A is a functional block diagram of an exemplary system employing a wireless local area network (LAN) to control charging a battery in a vehicle according to the present disclosure;

[0214] FIG. **3**B is a functional block diagram of an exemplary system employing a wireless local area network (LAN) to control charging a battery in a vehicle according to the present disclosure;

[0215] FIG. **4**A is a functional block diagram of an exemplary system employing a wireline local area network (LAN) to control charging a battery in a vehicle according to the present disclosure;

[0216] FIG. **4**B is a functional block diagram of an exemplary system employing a wireline local area network (LAN) to control charging a battery in a vehicle according to the present disclosure;

[0217] FIG. **5**A is a functional block diagram of an exemplary system employing a powerline carrier (PLC) system to control charging a battery in a vehicle according to the present disclosure;

[0218] FIG. **5**B is a functional block diagram of an exemplary system employing a powerline carrier (PLC) system to control charging a battery in a vehicle according to the present disclosure;

[0219] FIG. **6**A is a functional block diagram of an exemplary power meter employing a wireless communication interface for communicating with a utility company according to the present disclosure;

[0220] FIG. **6**B is a functional block diagram of an exemplary power meter employing a wireline communication interface for communicating with a utility company according to the present disclosure;

[0221] FIG. **6**C is a functional block diagram of an exemplary power meter employing a powerline carrier (PLC) interface for communicating with a utility company according to the present disclosure;

[0222] FIG. **7** is a functional block diagram of an exemplary charge exchange module used in the systems of FIGS. **3**A-**5**B for exchanging charge between a battery in a vehicle and a utility company according to the present disclosure;

[0223] FIG. **8**A is a flowchart of an exemplary method for supplying electric charge from a utility company to batteries in multiple vehicles according to the present disclosure;

[0224] FIG. **8**B is a flowchart of an exemplary method for returning electric charge from a battery in a vehicle to a utility company according to the present disclosure;

[0225] FIG. **9**A is a flowchart of an exemplary method for receiving electric charge from a utility company to charge batteries in multiple vehicles according to present disclosure;

[0226] FIG. **9**B is a flowchart of an exemplary method for returning electric charge from a battery in a vehicle to a utility company according to the present disclosure; and

[0227] FIG. **10** is a flowchart of an exemplary method for exchanging charge between a supply outlet that supplies power to a vehicle and a battery in the vehicle according to the present invention.

DETAILED DESCRIPTION

[0228] The following description is merely exemplary in nature and is in no way intended to limit the disclosure, its application, or uses. For purposes of clarity, the same reference numbers will be used in the drawings to identify similar elements. As used herein, the term module, circuit and/or device refers to an Application Specific Integrated Circuit (ASIC), an electronic circuit, a processor (shared, dedicated, or group) and memory that execute one or more software or firmware programs, a combinational logic circuit, and/or other suitable components that provide the described functionality. As used herein, the phrase at least one of A, B, and C should be construed to mean a logical (A or B or C), using a non-exclusive logical or. It should be understood that steps within a method may be executed in different order without altering the principles of the present disclosure.

[0229] Referring now to FIG. **2**, an increasing number of users of vehicles may attempt to simultaneously recharge batteries in vehicles as use of vehicles with rechargeable batteries and electric motors proliferates. For example, users at locations **1**, **2**, . . . , N may choose to recharge batteries in vehicles **10-1**, **10-2**, . . . , **10**-N, respectively, where N is an integer greater than 1. Many people arrive home after work at about the same time such as between 5 pm and 7 pm. If a significant number of these people plug in their vehicles for recharging batteries at the same time, the demand for power may exceed the available supply. Furthermore, the utility may still experience relatively high demand from other users for other purposes until 9 pm or 10 pm and relatively low demand from approximately 11 pm until 6 am.

[0230] Additionally, some users may attempt to recharge batteries in two or more vehicles at the same time at a given location. Consequently, the demand for power to recharge batteries and the load on a power distribution system of the utility company **23** may significantly increase since the utility company **23** may have to simultaneously supply power to users at locations **1**, **2**, . . . , N.

[0231] According to the present disclosure, utility companies may employ a charge management system (CMS) to coordinate charging of batteries in vehicles at multiple locations. Additionally, utility companies may take back charge from selected ones of the batteries via the CMS to facilitate load management if needed. In other words, some users may plug in their vehicles at 6 pm and request recharging by 6 am. Batteries in these vehicles may have charge remaining (for example, 50%, 60% or higher charge remaining). If users of these vehicles do not need to have the batteries recharged

immediately, the CMS may take charge from these batteries to facilitate charging of batteries in other vehicles and recharge these batteries later during periods of lower demand.

[0232] The vehicles may be equipped with a charge management module (CMM) that may communicate with utility companies via local area networks (LANs) or powerline carrier systems (PLCs). Users of the vehicles may generate default charging parameters for charging batteries on a daily basis and/or parameters for returning charge from the batteries. Additionally, users may create custom charging parameters when requesting charging at times other than default times. Collectively, these parameters may be called charging parameters.

[0233] The CMM may communicate the charging parameters to the utility companies via the CMS. In some circumstances, users may interact with utility companies to negotiate alternate charging parameters. Utility companies may supply power to the batteries and/or take back charge from the batteries according to the charging parameters generated by the users or the alternate charging parameters negotiated by the utility companies and the users.

[0234] Referring generally to FIGS. **3**A-**5**B, the CMS may be implemented using wireless LANs as shown in FIGS. **3**A and **3**B, wireline LANs as shown in FIGS. **4**A and **4**B, and/or PLCs as shown in FIGS. **5**A and **5**B. The CMS may comprise user interface modules that users may use to generate the charging parameters and to interact with utility companies. The user interface modules may be arranged inside vehicles as shown in FIGS. **3**A, **4**A, and **5**A or outside vehicles as shown in FIGS. **3**B, **4**B, and **5**B.

[0235] In a CMS, users may use the user interface modules to generate default and/or custom charging parameters. The charging parameters may specify a time of the day to charge the batteries, a charge completion time, a priority at which the batteries may be charged, and an expected time when the vehicles will be used next. Additionally, the charging parameters may include costs the users may pay if batteries are charged at higher than normal priority, etc. For example in the default charging parameters, users may indicate that the utility company may choose the time to charge the batteries when the cost is lowest.

[0236] Occasionally, users may request utility companies to charge the batteries at times and frequencies other than the times and frequencies specified in the default charging parameters. For example, users may request charging more frequently on weekends than on weekdays. In that case, users may generate custom charging parameters and approve predetermined additional costs that the users may pay to automatically receive power from utility companies as requested. Alternatively, users and utility companies may create alternate charging parameters by interactively negotiating costs and/or alternate times for charging the batteries. For example, utility companies may offer discounts to users when the users are willing to accept receiving power at other times.

[0237] Additionally, users may indicate whether they agree to return the charge, the amount of charge the users may return, etc. For example, at the end of the day, users may wish to retain a minimum charge (e.g., 25%) in the batteries for emergency use and return the rest provided that the utility companies charge the batteries before the time of next use arrives. The utility companies may offer credit to users for returning the charge. The amount of credit may depend on the demand for power, and the ability of utility companies to supply power when the users wish to return the charge and the amount of charge actually returned.

[0238] When utility companies receive charging parameters from the CMM in vehicles via the CMS, the utility companies may analyze the charging parameters and assess the load on the power distribution systems. Utility companies may interact with users to determine alternate charging parameters if the utility companies cannot supply power as requested by the users. Accordingly, utility companies may supply power to users based on charging parameters generated by users or based on alternate charging parameters negotiated by interacting with the users. With this flexibility, the utility companies may be able to balance the load on the distribution systems.

[0239] In FIG. **3**A, a CMS **100-1** is shown. A vehicle **102-1** is charged at a location such as a home or work location. The vehicle **102-1** includes the vehicle control systems **12**, the electric motor **13**, the battery **14**, a CMM **104-1**, and the power receptacle **18**. The vehicle **102-1** may or may not include an engine. The vehicle control systems **12** may control the operation of the vehicle **102-1** as previously described. During operation, the battery **14** may provide power to the electric motor **13** and/or the vehicle control systems **12**. The CMM **104-1** may communicate with the battery **14** and the power receptacle **18** and may manage the amount of charge in the battery **14**.

[0240] The location may include the supply outlet **20** that may receive power from the utility company **23** via the power distribution line **21**. The cable and connector **19** may connect the supply outlet **20** to the power receptacle **18** of the vehicle **102-1**. The vehicle **102-1** may draw power from the supply outlet **20** to charge the battery **14** or may return charge from the battery **14** to the utility company **23** via the supply outlet **20**. A power meter **24-1** may measure the amount of power exchanged between the utility company **23** and the vehicle **102-1** via the supply outlet **20**.

[0241] The CMM **104-1** charges the battery **14** using the power supplied by the utility company **23** to the supply outlet **20**. Additionally, the CMM **104-1** may return charge from the battery **14** to the utility company **23** via the supply outlet **20**. The CMM **104-1** includes a charge exchange module **106**, a user interface module **108**, a wireless network interface module **110-1**, and a control module **112**.

[0242] The charge exchange module **106** may monitor the amount of charge in the battery **14**, may communicate data regarding the amount of charge in the battery **14** to the control module **112**, and may exchange charge between the battery **14** and the power receptacle **18**. Specifically, the charge exchange module **106** charges the battery **14** using the power received from the utility company **23** via the supply outlet **20** and may return charge from the battery **14** to the utility company **23** via the supply outlet **20**.

[0243] The user interface module **108** may comprise a keypad, a display, a microphone, and/or a speaker (all not shown). A user of the vehicle **102-1** may use the user interface module **108** to set charging parameters for charging the battery **14** and for returning charge from the battery **14**. The wireless network interface module **110-1** may enable communication between the utility company **23** and the CMM **104-1**. The control module **112** may communicate with the charge exchange module **106**, the user interface module **108**, and the wireless network interface module **110-1** and may control the operation of the CMM **104-1**.

[0244] Specifically, the control module **112** may receive data relating to the amount of charge present in the battery **14** (i.e., a charge level of the battery **14**) from the charge exchange module **106**. Additionally, the control module **112** may receive data input by the user for charging the battery **14** and for returning charge from the battery **14** from the user interface module **108**. The CMM **104-1** may transmit the data received by the control module **112** to the utility company **23** via the wireless network interface module **110-1**. The data may be exchanged when the vehicle is plugged in and/or at other times.

[0245] The CMM **104-1** may communicate with the utility company **23** via a wireless LAN **114-1** operating at the location. The CMM **104-1** may communicate with the wireless LAN **114-1** via the wireless network interface module **110-1**, which may include an antenna **110-2**.

[0246] The wireless LAN **114-1** may include an access point **116** having an antenna **116-1**, a router **118**, and a broadband interface (BBI) **120**. The BBI **120** may include a modem and may communicate with a service provider **122**. The service provider **122** may provide a link between the wireless LAN **114-1** and a distributed communication system **124** such as the Internet. Thus, the CMM **104-1** in the vehicle **102-1** may communicate with the distributed communication system **124** via the wireless LAN **114-1**.

[0247] In FIG. **3**B, a CMS **100-2** may include the user interface module **108** that is arranged outside a vehicle **102-2**. For example, the user interface module **108** may be arranged adjacent to the power meter **24-1** and/or the supply outlet **20**. The user interface module **108** may communicate with the wireless LAN **114-1** via a wireless network interface module **110-3** having an antenna **110-4**. The user interface module **108** and the wireless network interface module **110-3** may optionally be implemented by a single module. The wireless network interface module **110-3** may enable the user interface module **108** to communicate with the utility company **23**. Additionally, the wireless network interface module **110-3** may enable the user interface module **108** to communicate with a CMM **104-2** in the vehicle **102-2** via the user LAN **114-1**. Otherwise, the CMS **100-2** of FIG. **3**B may be substantially similar to the CMS **100-1** of FIG. **3**A.

[0248] In FIG. **4**A, a CMS **100-3** is shown. A vehicle **102-3** may include a CMM **104-3** that includes the user interface module **108** and a wireline network interface module **111-1**. The wireline network interface module **111-1** may enable the CMM **104-3** to communicate with the utility company **23** via a wireline LAN **114-2**. The wireline LAN **114-2** may comprise a router **119** and the BBI **120**. Otherwise, the CMS **100-3** of FIG. **4**A may be substantially similar to the CMS **100-1** of FIG. **3**A.

[0249] In FIG. **4**B, a CMS **1004** may include the user interface module **108** that is arranged outside a vehicle **102-4**. For example, the user interface module **108** may be arranged adjacent to a power meter **24-2** and/or the supply outlet **20**. The user interface module **108** may communicate with the wireline LAN **114-2** via a wireline network interface module **111-2**. The user interface module **108** and the wireline network interface module **111-2** may optionally be implemented by a single module. The wireline network interface module **111-2** may enable the user interface module **108** to communicate with the utility company **23**. Additionally, the wireline network interface module **111-2** may enable the user interface module **108** to communicate with a CMM **104-4** in the vehicle **102-4** via the user LAN **114-2**. Otherwise, the CMS **100-4** of FIG. **4**B may be substantially similar to the CMS **100-3** of FIG. **4**A.

[0250] Hereinafter, the vehicles **102-1**, **102-2**, **102-3**, and **102-4** may be collectively referred to as vehicle **102**; the CMMs **104-1**, **104-2**, **104-3**, and **104-4** may be collectively referred to as CMM **104**; and the wireless and wireline LANs **114-1**, **114-2** may be collectively referred to as LAN **114**. Additionally, the wireless network interface modules **110-1**, **110-3** and the wireline network interface modules **111-1**, **111-2** may be collectively referred to as network interface module **110**.

[0251] The utility company **23** may receive the charging parameters generated by the user and may respond to requests for charging the battery **14**. The utility company **23** may transmit a reply to the user indicating whether power can be supplied as requested. The utility company may propose alternate charging parameters. Additionally, the utility company **23** may determine from the charging parameters if the user may return charge from the battery **14**.

[0252] Referring now to FIGS. **3**A-**4**B, the utility company **23** may communicate with the CMM **104** in the vehicle **102** via a LAN **130**. The LAN **130** may include at least one computer **134** with a load management module (LMM) **134-1**. Additionally, the LAN **130** may comprise a database **134-2** and a communication module **134-3**, which may include a network interface **136** and a BBI **138**. The network interface **136** may be a wireless and/or a wireline LAN interface and may communicate via the BBI **138** with a service provider **132**. The service provider **132** may provide a link between the LAN **130** and the distributed communication system **124**. Thus, the utility company **23** may communicate with the CMM **104** in the vehicle **102** and/or the user of the vehicle **102** via the LAN **130**, the distributed communication system **124**, and the LAN **114**. While a single computer **134** is shown, multiple computers may be used.

[0253] Additionally, the utility company **23** may communicate with CMMs and/or users of other vehicles at other locations. The communication module **134-3** may receive charging parameters from CMMs and/or users of multiple vehicles. The LMM **134-1** may analyze the load on the distribution system based on the requested charging parameters from multiple customers. The LMM **134-1** may determine a schedule for charging batteries in multiple vehicles. The LMM **134-1** may generate alternate charging parameters and generate replies to be transmitted to multiple users. The communication module **134-3** may communicate the replies including alternate charging parameters to the CMMs and/or users. The computer **134** may store the charging parameters and/or the alternate charging parameters in the database **134-2**. Additionally, the computer **134** may identify users that may return the charge and store the information in the database **134-2**.

[0254] In FIG. **5**A, a CMS **100-5** may utilize PLCs instead of LANs to enable communication between the utility company **23**, a vehicle **102-5**, and a user of the vehicle **102-5**. Specifically, the vehicle **102-5** may comprise a CMM **104-5** that includes the user interface module **108** and a PLC transceiver module **113-1**. The CMM **104-5** may communicate with the utility company **23** via the PLC transceiver module **113-1**. Additionally, the user of the vehicle **102-5** may use the user interface module **108** to communicate with the utility company **23** via the PLC transceiver module **113-1**.

[0255] Specifically, the PLC transceiver module **113-1** may transmit and receive data to and from the utility company **23** via the supply outlet **20**. That is, the PLC transceiver module **113-1** may transmit and receive data through the same power distribution line **21** that distributes power from the utility company **23** to the supply outlet **20**. PLC transceivers selectively superimpose a high frequency signal at zero crossings of the power line carrier to represent data. Presence or absence of the high frequency signal may be used to represent binary data. The CMM **104-5** may transmit data collected by the control module **112** from the user interface module **108** and the charge exchange module **106** to the utility company **23** via the PLC transceiver module **113-1**.

[0256] The computer **134** located at the utility company **23** may comprise the LMM **134-1**. The LMM **134-1** may receive and transmit data via a PLC transceiver module **23-2** that communicates with the power distribution line **21**. The LMM **134-1** may receive the charging parameters transmitted by the CMM **104-5** and/or the user. The LMM **134-1** may transmit alternate charging parameters to the supply outlet **20**. The computer **134** may store the charging parameters and/or the alternate charging parameters in the database **134-2**.

[0257] The PLC transceiver module **113-1** may receive the data transmitted by the LMM **134-1** and may provide the data to the control module **112**. The control module **112** may, in turn, provide the data to the charge exchange module **106**. Additionally, the control module **112** may provide the data to the user via the user interface module **108**. Otherwise, the CMS **100-5** of FIG. **5**A may be substantially similar to the CMS **100-1** of FIG. **3**A.

[0258] In FIG. **5**B, a CMS **100-6** may include the user interface module **108** that is located outside a vehicle **102-6**. For example, the user interface module **108** may be located adjacent to a power meter **24-3** and/or the supply outlet **20**. The user interface module **108** may communicate with a PLC transceiver module **113-2**. The user interface module **108** and the PLC transceiver module **113-2** may be implemented by a single module. The PLC transceiver module **113-2** may enable the user interface module **108** to communicate with the utility company **23**. Additionally, the PLC transceiver module **113-2** may enable the user interface module **108** to communicate with a CMM **104-6** in the vehicle **102-6** via the supply outlet **20**. Otherwise, the CMS **100-6** of FIG. **5**B may be substantially similar to the CMS **100-5** of FIG. **5**A.

[0259] Referring generally to FIGS. **6**A-**6**C, power meters **24-1**, **24-2**, and **24-3** (collectively **24**) are shown in FIGS. **3**A-**3**B, **4**A-**4**B, and **5**A-**5**B, respectively. The power meters **24** may comprise a power measuring module **25** that measures power supplied to the supply outlet **20** by the utility company **23** and the power returned to the utility company **23** from the battery **14** via the supply outlet **20**. The power measuring module **25** may generate data indicating the amount of power exchanged between the utility company **23** and the supply outlet **20**. Additionally, the power meters **24** may be equipped with communication interfaces that enable the power meters **24** to communicate the data to the utility company **23**.

[0260] In FIG. **6**A, the power meter **24-1** may comprise a wireless network interface module **110-5** having an antenna **110-6**. The power meter **24-1** may communicate with the wireless LAN **114-1** using the wireless network interface module **110-5**. Thus, the power meter **24-1** may communicate with the utility company **23** via the wireless LAN **114-1**. In FIG. **6**B, the power meter **24-2** may comprise a wireline network interface module **111-3**. The power meter **24-2** may communicate with the wireline LAN **114-2** using the wireline network interface module **111-3**. Thus, the power meter **24-2** may communicate with the utility company **23** via the wireline LAN **114-2**. In FIG. **6**C, the power meter **24-3** may comprise a PLC transceiver module **113-3**. The power meter **24-3** may communicate with the utility company **23** via the PLC transceiver module **113-3**.

[0261] Hereinafter, the vehicles **102-1**,**102-2**, **102-3**,**102-4**, **102-5**, and **102-6** may be collectively referred to as vehicle **102**. The CMMs **104-1**, **104-2**, **104-3**, **104-4**, **104-5**, and **104-6** may be collectively referred to as CMM **104**. Additionally, the CMSs **100-1**, **100-2**, **100-3**, **100-4**, **100-5**, and **100-6** may be collectively referred to as CMS **100**.

[0262] More specifically, the CMS **100** may manage the charging of the battery **14** and/or returning of charge from the battery **14** as follows. The user may use the user interface module **108** to generate charging parameters comprising the time at which the battery **14** may be charged, etc. For example, the user may request a full charge daily between 9 pm and 6 am. Accordingly, the user may input charging parameters that include the daily charging times using the user interface module **108**. The charging parameters may be stored in the CMM **104**. When the user plugs the vehicle **102** into the supply outlet **20** at the end of the day, the CMM **104** may transmit the charging parameters to the utility company **23**. The utility company **23** may charge the battery **14** between 9 pm and 6 am without interacting with the user.

[0263] Depending on the number of users simultaneously requesting charge and depending on the load on the distribution system, the utility company **23** may supply power in a staggered manner to multiple users requesting charging between 9 pm and 6 am. For example, the utility company **23** may schedule charging as follows. The utility company **23** may supply power to a first set of users from 9 pm to 10 pm, to a second set of users from 10 pm to 11 pm, etc. Subsequently, the utility company **23** may supply power to the first set of users from 3 am to 4 am, etc. Eventually, users requesting charge by 6 am may receive the requested charge by 6 am. Thus, the utility company **23** may control charging times, etc. of the batteries in multiple vehicles without loading the power distribution system.

[0264] Occasionally, the user may use the user interface module **108** to interact with the utility company **23** and input requests for charging the battery **14** at times other than the default times. For example, the user may input a request for charging at 5 pm on a given day. Depending on the load on the distribution system, the utility company **23** may inform the user if the utility company **23** can supply power to the user at the requested time. If not, the utility company **23** may respond with an alternate schedule depending on the request received from the user. For example, the utility company **23** may inform the user of any extra cost the user may incur if the utility company **23** supplies power at the requested time or a discount the user may receive if the user accepts power at a different time. Thus, the alternate charging parameters may include alternate charging times, additional costs, discounts, etc.

[0265] The user may include in the schedule a pre-approval for a predetermined amount of additional cost that the user may pay if the utility company supplies power as requested. In that case, the utility company **23** may receive an automatic approval for the extra cost from the CMM **104**. Alternatively, the user may respond interactively. That is, the user may

accept, decline, or negotiate the additional cost and/or alternate charging times suggested by the utility company **23** by interacting with the utility company **23** using the user interface module **108**. Alternatively, standard rates at various times may be predetermined.

[0266] Occasionally, the user may inform the utility company **23** via the charging parameters that the utility company **23** may take back charge from the battery **14**. The user may indicate that a minimum charge level (e.g., 25%) that must be left in the battery **14**. The minimum charge may also be called a safe level of charge. The utility company **23** may take back the charge if the load on the distribution system is high and if the utility company **23** needs extra power to fulfill demand. The utility company **23** may take back any extra charge (e.g., charge in excess of 25%) from the battery **14** and credit the user for returning the charge.

[0267] The control module **112** in the CMM **104** may control the charging of the battery **14** and returning of the charge from the battery **14** based on the charging parameters and/or the alternate charging parameters. Specifically, the control module **112** may receive data from the charge exchange module **106** regarding the amount of charge in the battery **14**. Additionally, the control module **112** may receive charging parameters input by the user and/or alternate charging parameters transmitted by the utility company **23**. The control module **112** may provide the charging parameters to the charge exchange module **106**.

[0268] Referring now to FIG. **7**, the charge exchange module **106** may comprise a charge monitoring module **150**, a charging module **152**, and a charge retrieval module **154**. The charge monitoring module **150** may monitor the amount of charge present in the battery **14**. For example, the charge monitoring module **150** may inform the control module **112** when the amount of charge in the battery **14** is less than or equal to a predetermined threshold and that the battery may need to be recharged. The charge monitoring module **150** may monitor the amount of charge in the battery **14** when the battery **14** is being charged and may inform the control module **112** when the charging is completed. Additionally, the charge monitoring module **150** may monitor the amount of charge in the battery **14** when the charge in the battery **14** is being returned to the utility company **23**. The charge monitoring module **150** may inform the control module **112** when the charge in the battery **14** is less than or equal to the safe level.

[0269] The control module **112** may generate a charge control signal based on the charging parameters based on which the charging module **152** may charge the battery **14**. Specifically, when the battery **14** is being charged, the charge monitoring module **150** may activate a converter **156** and the charging module **152** based on the charging parameters received from the control module **112**. For example, the charge monitoring module **150** may activate the converter **156** and the charging module **152** when the time for charging the battery **14** has arrived. The converter **156** may receive input power from the power receptacle **18**. The converter **156** may convert the input power to a direct current (DC) voltage. The charging module **152** may generate an output that is suitable to charge the battery **14**.

[0270] The charge monitoring module **150** may inform the control module **112** when the battery **14** is charged to a predetermined level (e.g., full charge) that may be indicated in the charging parameters. Subsequently, the charge monitoring module **150** may stop charging the battery **14** by deactivating the converter **156** and the charging module **152**. The power meter **24** may measure the amount of power received from the utility company **23** during the charging operation. The power meter **24** may communicate data regarding the amount of charge supplied to the battery **14** to the utility company **23**.

[0271] On the other hand, when the utility company **23** takes back the charge from the battery **14**, the utility company **23** may transmit a charge return request for taking the charge back from the battery **14** to the CMM **104**. Upon receiving the charge return request, the control module **112** may determine if the vehicle **102** is plugged into the supply outlet **20**. If the vehicle **102** is plugged into the supply outlet **20**, the control module **112** may generate a charge return control signal and transmit the charge return control signal to the utility company **23** indicating that the vehicle **102** is ready to return charge.

[0272] Subsequently, based on the charge return control signal, the charge monitoring module **150** may activate the charge retrieval module **154** and an inverter **158** based on the charging parameters received from the control module **112**. The charge retrieval module **154** may retrieve charge from the battery **14** and generate a DC voltage. The inverter **158** may convert the DC voltage into an AC voltage depending on the type of power supplied by the utility company **23** to the supply outlet **20**. The inverter **158** may output the power to the power receptacle **18** that is connected to the supply outlet **20**. Thus, the charge from the battery **14** may be returned to the utility company **23** via the supply outlet **20**.

[0273] Based on the charging parameters, the charge monitoring module **150** may inform the control module **112** when the battery **14** has returned a predetermined amount of charge and/or when the charge remaining in the battery **14** is at or below the safe level indicated in the charging parameters. Subsequently, the charge monitoring module **150** may deactivate the charge retrieval module **154** and the inverter **158**.

[0274] The power meter **24** may measure the amount of charge returned to the utility company **23**. The power meter **24** may communicate data regarding the amount of charge retrieved from the battery **14** and returned to the utility company **23**. The utility company **23** may credit the account of the user depending on the amount and the time when the user returned the charge. For example, the utility company **23** may give more credit for the charge returned when the demand for charging batteries is high than when the demand is low.

[0275] Referring generally to FIGS. **8**A-**9**B, methods for supplying power to vehicles, taking back charge from vehicles, charging batteries in vehicles, and returning charge from batteries to utility companies are shown. In FIG. **8**A, a method **200** for supplying power to charge the battery **14** in the vehicle **102** may begin at step **202**. In step **204**, the utility company **23** may receive charging parameters from the CMM **104** and/or the user of the vehicle **102**. In step **206**, the LMM **134-1** may analyze the charging parameters and determine the load on the distribution system.

[0276] In step **207**, the LMM **134-1** may determine whether the user demands charge at normal priority. If true, the LMM **134-1** may determine in step **208** whether the utility company **23** can supply power at normal priority. If false, the LMM **134-1** may transmit alternate charging parameters to the user in step **210**. In step **211**, the LMM **134-1** may determine whether the CMM **104** automatically approved the alternate charging parameters.

[0277] On the other hand, if the result of step **207** is false, the LMM **134-1** may determine in step **214** whether the utility company **23** can supply power at the higher priority. If false, the method **200** may perform steps beginning at step **208**. Otherwise, the LMM **134-1** may transmit alternate charging parameters including additional cost to the user in step **216**. The LMM **134-1** may determine in step **218** whether the CMM **104** automatically approved the additional cost.

[0278] If the result of step **211** or **218** is false, the user may interactively negotiate alternate charging parameters with the utility company in step **212**. At the end of step **212**, or if the result of step **208**, **211**, or **218** is true, the method may perform step **220**. In step **220**, the LMM **134-1** may wait until time to supply power arrives. In step **222**, the LMM **134-1** may supply power to the battery **14** according to either the charging parameters received from the CMM **104** and/or the user or the alternate charging parameters. In step **223**, the LMM **134-1** may determine whether charging parameters are received from other users. If true, the method **200** may perform steps beginning at step **206**. If false, the method **200** may end in step **224**.

[0279] Referring now to FIG. **8**B, a method **250** for taking charge back from the battery **14** in the vehicle **102** may begin at step **252**. The LMM **134-1** may determine in step **254** whether the utility company **23** needs charge to fulfill demand. If false, the method **250** may wait. Otherwise, the LMM **134-1** may analyze the charging parameters stored in the database **134-2** in step **256** and identify users who may return charge. The LMM **134-1** may transmit a request to take back charge from the battery **14** in step **258** and determine based on the response received whether the vehicle **102** is plugged into the supply outlet **20**. If true, the utility company **23** may begin taking the charge back in step **262**.

[0280] In step **264**, the utility company **23** may continue to take the charge back from the battery **14** until the charge remaining in the battery **14** is less than or equal to the safe level. When the charge remaining in the battery **14** is less than or equal to the safe level, the utility company **23** may stop taking back charge from the battery in step **266**. The utility company **23** may credit the user in step **268** for the charge returned. In step **270**, the LMM **134-1** may determine whether the utility company **23** still needs more charge to fulfill demand. If false, the method **250** may end in step **272**. Otherwise, the LMM **134-1** may determine in step **274** whether any other user is willing to return charge. If true, the method **250** may perform steps beginning at step **258**. If false, the method **250** may end in step **272**.

[0281] Referring now to FIG. **9**A, a method **300** for charging a battery **14** in the vehicle **102** may begin at step **302**. The user may plug the vehicle **102** into the supply outlet **20** in step **303**. The CMM **104** may determine in step **304** whether the battery **14** needs to be charged. If false, the method **300** may wait. If true, the user may determine if the battery needs to be charged at the normal or higher priority in step **305**. If normal, the CMM **104** may transmit charging parameters to the utility company **23** in step **306**. Otherwise, the user may interactively transmit charging parameters to the utility company in step **307**.

[0282] In step **308**, the CMM **104** may receive alternate charging parameters from the utility company **23**. The CMM **104** may determine whether to automatically accept the alternate charging parameters in step **310**. If false, the user may interactively negotiate alternate charging parameters with the utility company **23** in step **314**. At the end of step **314** or if the result of step **310** is true, the method **300** may perform step **316**. In step **316**, the control module **112** may determine whether the time to charge the battery **14** has arrived. If false, the method **300** may wait. Otherwise, the charge exchange module **106** may receive the charge from the supply outlet **20** and may charge the battery **14** in step **320**. The method **300** may end in step **322**.

[0283] Referring now to FIG. **9**B, a method **350** for returning charge from the battery **14** in the vehicle **102** to the utility company **23** may begin at step **352**. The user may plug the vehicle **102** into the supply outlet **20** in step **303**. The CMM **104** may determine in step **354** whether a request to return charge is received from the utility company **23**. If false, the method **350** may wait. Otherwise, the control module **112** may transmit a control signal to the utility company **23** indicating that the CMM **104** is ready to return charge, and the charge exchange module **106** may begin returning charge from the battery **14** to the utility company **23** in step **356**.

[0284] In step **358**, the charge monitoring module **150** may determine whether the charge remaining in the battery **14** is less than or equal to the safe level. If false, the method **350** may repeat steps **356** and **358**. Otherwise, the charge exchange module **106** may stop returning charge from the battery **14** to the utility company **23** in step **360**. The method **350** may end in step **362**.

[0285] Referring now to FIG. **10**, a method **400** for exchanging charge between the battery **14** and the supply outlet **20** begins in step **402**. Based on the charging parameters, the charge monitoring module **150** may determine if time to charge the battery **14** has arrived in step **408**. If true, the charge monitoring module **150** may activate the converter **156** and the charging module **152** in step **410**. The converter **156** may receive AC power from the supply outlet **20**, convert the AC power to DC power, and the charging module **152** may charge the battery **14** in step **412**.

[0286] Based on the charging parameters, the charge monitoring module **150** may determine in step **414** if charging of the battery **14** is complete. That is, the charge monitoring module **150** may determine in step **414** if the battery **14** received the amount of charge specified in the charging parameters. If false, the method **400** may repeat steps **412** and **414**. Otherwise, the charge monitoring module **150** may inform the control module **112** that the charging is complete and may deactivate the converter **156** and the charging module **152** in step **416**. The method **400** may end in step **418**.

[0287] If, however, the result of step **408** is false, the charge monitoring module **150** may determine in step **420** if time to return the charge from the battery **14** has arrived. If true, the charge monitoring module **150** may activate the charge retrieval module **154** and the inverter **158** in step **422**. The charge retrieval module **154** may retrieve the charge from the battery **14**, the inverter **158** may convert the DC power output by the charge retrieval module **154** to AC power, and may output the AC power to the supply outlet **20** in step **424**.

[0288] Based on the charging parameters, the charge monitoring module **150** may determine in step **426** if returning the charge from the battery **14** is complete. That is, the charge monitoring module **150** may determine in step **426** if the amount of charge specified in the charging parameters (e.g., charge in excess of the safe level) is returned from the battery **14**. If false, the method **400** may repeat steps **424** and **426**. Otherwise, the charge monitoring module **150** may inform the control module **112** that the returning of the charge is

complete and may deactivate the charge retrieval module **154** and the inverter **158** in step **428**. The method **400** may end in step **418**.

[0289] Those skilled in the art can now appreciate from the foregoing description that the broad teachings of the disclosure can be implemented in a variety of forms. Therefore, while this disclosure includes particular examples, the true scope of the disclosure should not be so limited since other modifications will become apparent to the skilled practitioner upon a study of the drawings, the specification and the following claims.

What is claimed is:

1. A system comprising:

a control module that stores a first set of charging parameters for charging a battery in a vehicle;

a network interface module that transmits said first set of charging parameters to a utility company and that receives a reply from said utility company,

wherein said control module generates a charge control signal based on said reply and said first set of charging parameters; and

a charging module that charges said battery of said vehicle based on said charge control signal.

2. The system of claim **1** wherein said reply includes a second set of charging parameters that is different than said first set of charging parameters.

3. The system of claim **1** wherein said reply includes a second set of charging parameters that is the same as said first set of charging parameters.

4. The system of claim **1** wherein said first set of charging parameters includes a first time to begin charging, and wherein said reply includes a second time to begin charging that is different than said first time.

5. The system of claim **1** wherein said network interface module comprises one of a wireline interface, a wireless interface, and a powerline carrier (PLC) interface.

6. The system of claim **1** further comprising a converter that communicates with said charging module and that converts power from alternating current (AC) power to direct current (DC) power.

7. The system of claim **1** further comprising a charge monitoring module that monitors a charge level of said battery and that outputs said charge level to said control module, wherein said first set of charging parameters includes said charge level.

8. The system of claim **1** further comprising a user interface module that communicates with said control module and that allows user entry of said first set of charging parameters.

9. The system of claim **1** further comprising a user interface module that communicates with said control module and that allows user entry of a default set of charging parameters, wherein said first set of charging parameters is based on said default set of charging parameters.

10. The system of claim **1** wherein said network interface module receives a charge return request from said utility company, and said system further comprising a charge retrieval module that selectively returns charge from said battery to said utility company based on said charge return request.

11. The system of claim **10** further comprising an inverter that inverts said charge.

12. A vehicle comprising the system of claim **1** and further comprising:

an electric motor that drives said vehicle,

wherein said battery provides power to said electric motor when said electric motor drives said vehicle.

13. A method comprising:

storing a first set of charging parameters for charging a battery in a vehicle;

transmitting said first set of charging parameters to a utility company;

receiving a reply from said utility company;

generating a charge control signal based on said reply and said first set of charging parameters; and

charging said battery of said vehicle based on said charge control signal.

14. The method of claim **13** wherein said reply includes a second set of charging parameters that is different than said first set of charging parameters.

15. The method of claim **13** wherein said reply includes a second set of charging parameters that is the same as said first set of charging parameters.

16. The method of claim **13** wherein said first set of charging parameters includes a first time to begin charging, and wherein said reply includes a second time to begin charging that is different than said first time.

17. The method of claim **13** further comprising transmitting said first set of charging parameters and receiving said reply via one of a wireline interface, a wireless interface, and a powerline carrier (PLC) interface.

18. The method of claim **13** further comprising converting power from alternating current (AC) power to direct current (DC) power.

19. The method of claim **13** further comprising monitoring a charge level of said battery and including said charge level in said first set of charging parameters.

20. The method of claim **13** further comprising receiving said first set of charging parameters from a user of said vehicle.

21. The method of claim **13** further comprising receiving a default set of charging parameters from a user of said vehicle, wherein said first set of charging parameters is based on said default set of charging parameters.

22. The method of claim **13** further comprising receiving a charge return request from said utility company and selectively returning charge from said battery to said utility company based on said charge return request.

23. The method of claim **22** further comprising receiving said charge return request via one of a wireline interface, a wireless interface, and a powerline carrier (PLC) interface.

24. The method of claim **22** further comprising inverting said charge.

25. The method of claim **13** further comprising providing power from said battery to an electric motor and driving said vehicle using said electric motor.

26. A system comprising:

control means for storing a first set of charging parameters for charging a battery in a vehicle;

network interface means for transmitting said first set of charging parameters to a utility company and receiving a reply from said utility company,

wherein said control means generates a charge control signal based on said reply and said first set of charging parameters; and

charging means for charging said battery of said vehicle based on said charge control signal.

27. The system of claim **26** wherein said reply includes a second set of charging parameters that is different than said first set of charging parameters.

28. The system of claim **26** wherein said reply includes a second set of charging parameters that is the same as said first set of charging parameters.

29. The system of claim **26** wherein said first set of charging parameters includes a first time to begin charging, and wherein said reply includes a second time to begin charging that is different than said first time.

30. The system of claim **26** wherein said network interface means comprises one of wireline, wireless, and powerline carrier (PLC) interface means for transmitting and receiving data.

31. The system of claim **26** further comprising converter means for converting power from alternating current (AC) power to direct current (DC) power.

32. The system of claim **26** further comprising charge monitoring means for monitoring a charge level of said battery and communicating said charge level to said control means, wherein said first set of charging parameters includes said charge level.

33. The system of claim **26** further comprising user interface means for inputting said first set of charging parameters, wherein said user interface means communicates with said control means.

34. The system of claim **26** further comprising user interface means for inputting a default set of charging parameters, wherein said first set of charging parameters is based on said default set of charging parameters, and wherein said user interface means communicates with said control means.

35. The system of claim **26** wherein said network interface means receives a charge return request from said utility company, and said system further comprising charge retrieval means for selectively returning charge from said battery to said utility company based on said charge return request.

36. The system of claim **35** further comprising inverter means for inverting said charge.

37. A vehicle comprising the system of claim **26** and further comprising:

an electric motor that drives said vehicle,

wherein said battery provides power to said electric motor when said electric motor drives said vehicle.

* * * * *