US 20060028178A1

(19) United States

(12) Patent Application Publication

(10) Pub. No.: US 2006/0028178 A1

(43) Pub. Date: Feb. 9, 2006

Hobbs

(54) BATTERY CHARGER AND METHOD OF CHARGING A BATTERY

(75) Inventor: **Raymond Hobbs**, Avondale, AZ (US)

Correspondence Address:
SNELL & WILMER
ONE ARIZONA CENTER
400 EAST VAN BUREN
PHOENIX, AZ 850040001

(73) Assignee: **PINNACLE WEST CAPITAL CORPORATION**, Phoenix, AZ (US)

(21) Appl. No.: **11/162,107**

(22) Filed: **Aug. 29, 2005**

Related U.S. Application Data

(63) Continuation-in-part of application No. 10/603,879, filed on Jun. 24, 2003, now Pat. No. 6,963,186.

(60) Provisional application No. 60/450,947, filed on Feb. 28, 2003.

Publication Classification

(51) Int. Cl.
H02J 7/00 (2006.01)

(52) U.S. Cl. **320/128**

(57) **ABSTRACT**

Stationary and on-board battery chargers, methods of charging batteries, electric-vehicle chargers, and vehicles with chargers, including electric vehicles and hybrid electric vehicles. Chargers may automatically charge at the correct battery voltage for various types of batteries. Chargers have variable AC power supplies controlled by digital controllers, isolation transformers, and rectifiers. Transformers may be foil-type, and may have copper foil. Power supplies may be variable-frequency generators and the controllers may control the frequency. Use of the variable frequency generator supply facilitates reduced component size and weight and better battery charging performance. Electric vehicle chargers may have card readers, and vehicles may have batteries and a charger. Methods of charging include identifying the battery type and gradually increasing the charging at different rates of increase while monitoring charging voltage, charging current, or both, until a current lid is reached. Charging may occur at constant current and then at constant voltage.

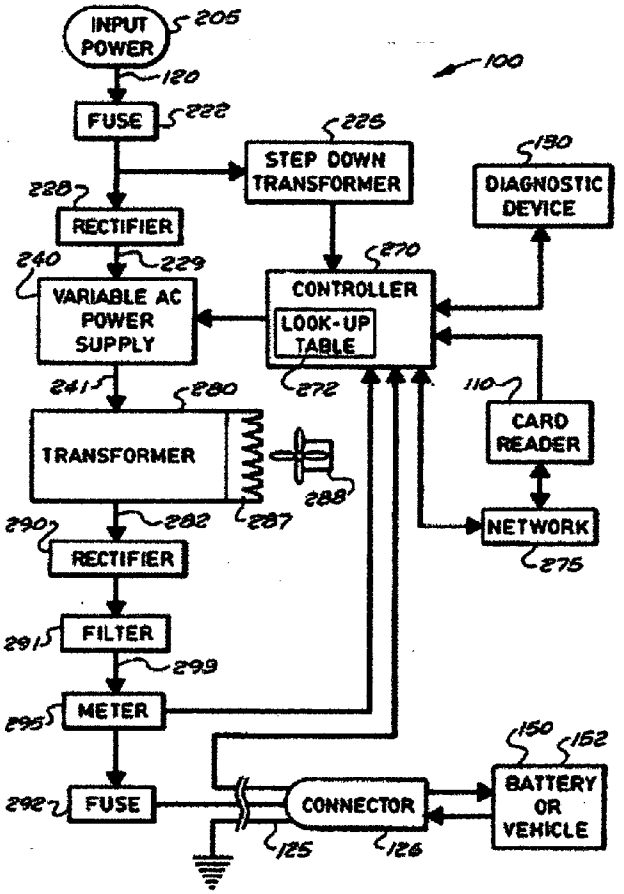

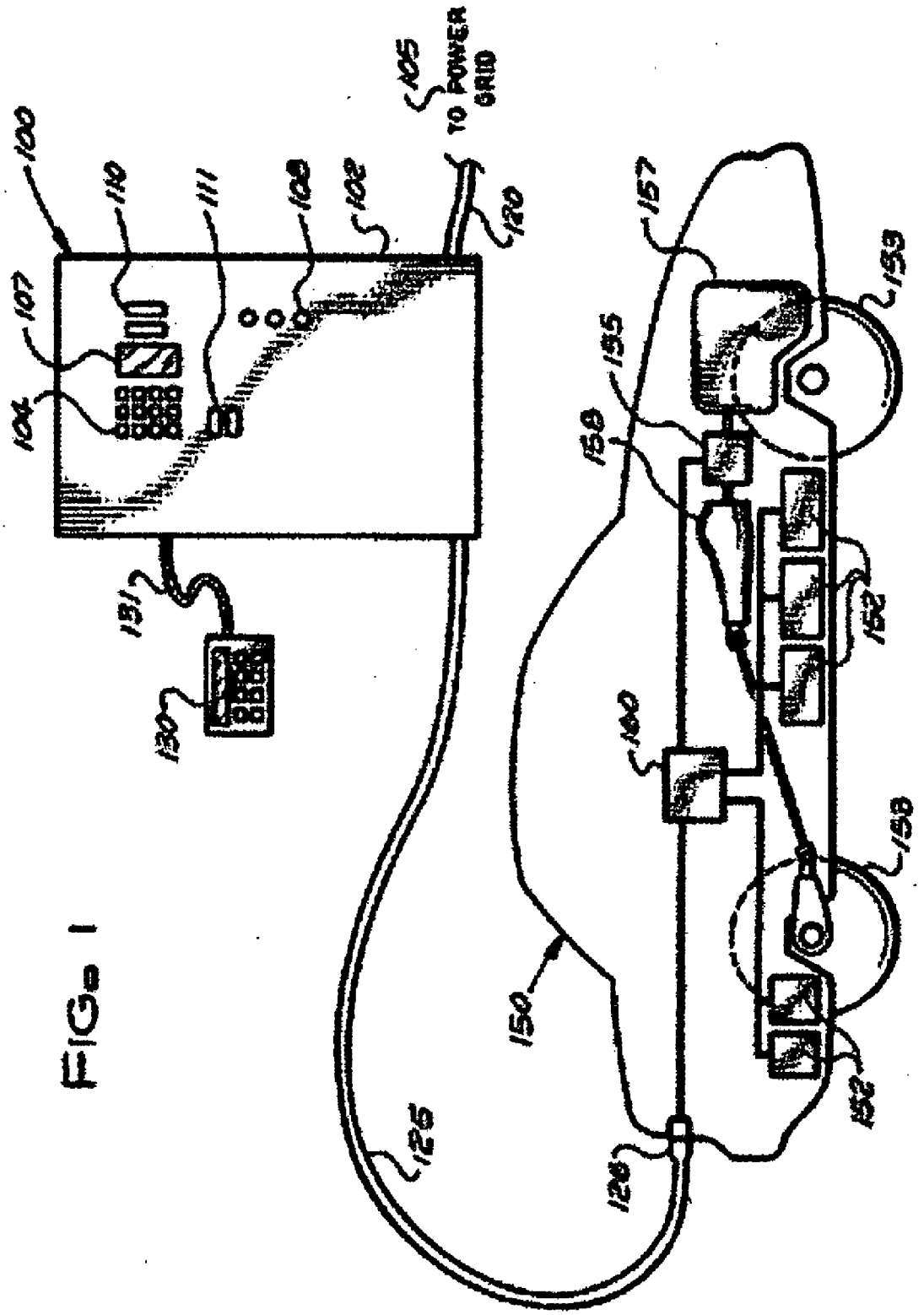
100
110
111
108
102
105
TO POWER GRID
120
107
104
131
130
157
153
155
158
152
160
158
150
152
126
126

FIG. 1

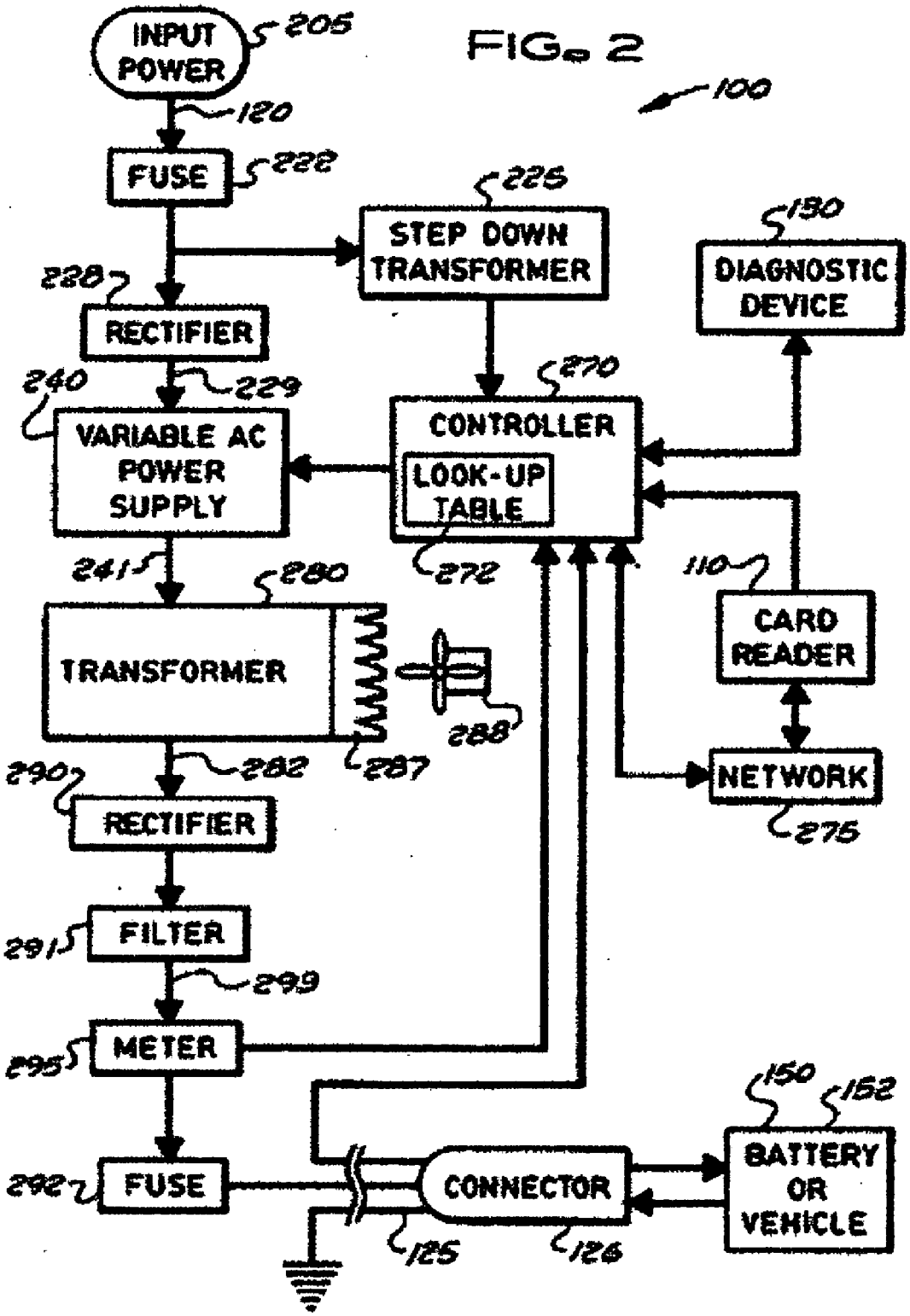
FIG. 2
100
INPUT POWER
205
120
FUSE
222
225
STEP DOWN TRANSFORMER
130
DIAGNOSTIC DEVICE
228
RECTIFIER
240
229
270
CONTROLLER
VARIABLE AC POWER SUPPLY
LOOK-UP TABLE
272
241
280
110
CARD READER
TRANSFORMER
288
287
282
290
NETWORK
275
RECTIFIER
FILTER
291
299
METER
295
150
152
BATTERY OR VEHICLE
292
FUSE
CONNECTOR
125
126

FIG. 3

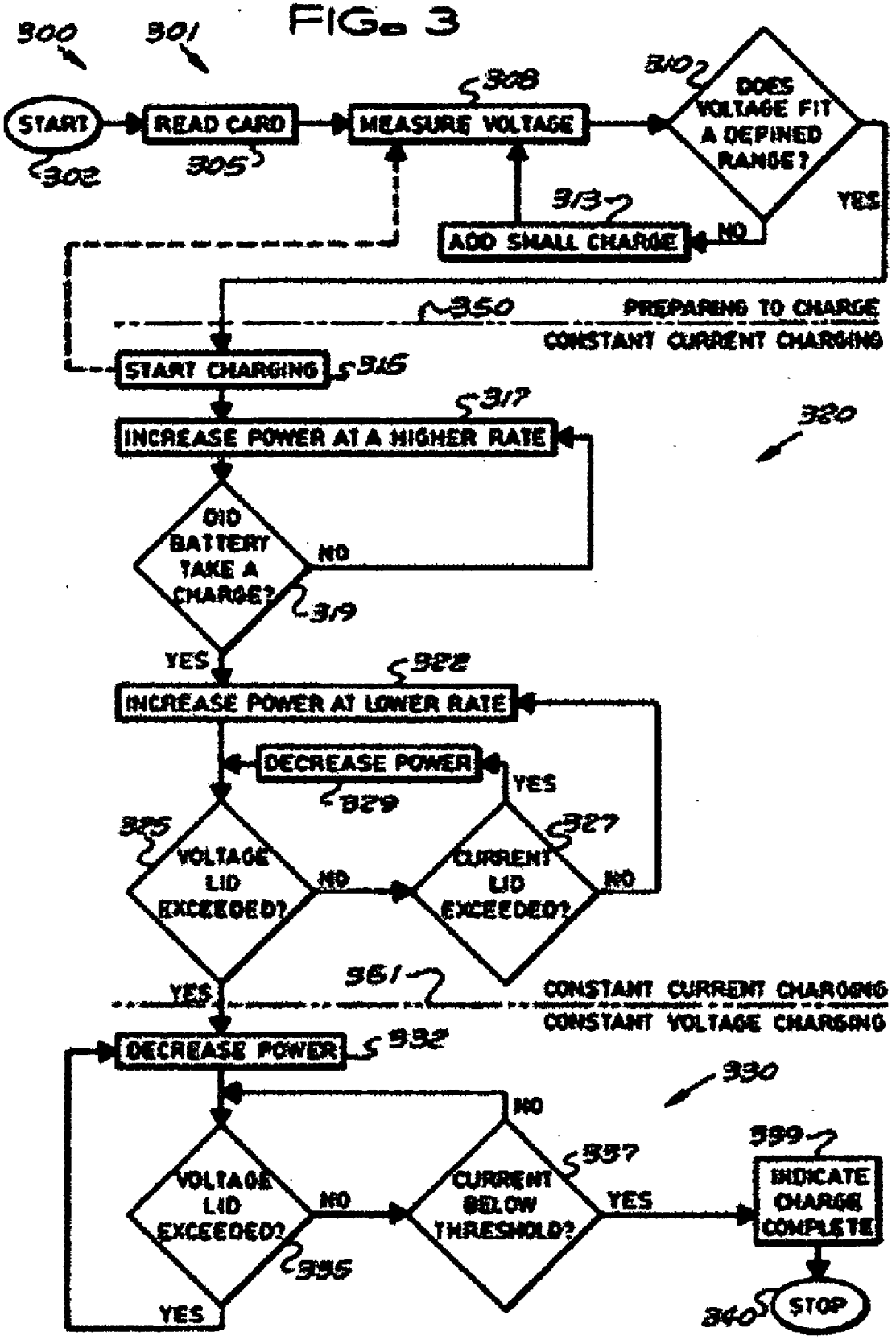
300
301
START
302
READ CARD
305
MEASURE VOLTAGE
308
DOES VOLTAGE FIT A DEFINED RANGE?
310
YES
NO
ADD SMALL CHARGE
313
350
PREPARING TO CHARGE
CONSTANT CURRENT CHARGING
START CHARGING
315
INCREASE POWER AT A HIGHER RATE
317
320
DID BATTERY TAKE A CHARGE?
319
NO
YES
INCREASE POWER AT LOWER RATE
322
DECREASE POWER
329
YES
VOLTAGE LID EXCEEDED?
325
NO
CURRENT LID EXCEEDED?
327
NO
YES
351
CONSTANT CURRENT CHARGING
CONSTANT VOLTAGE CHARGING
DECREASE POWER
332
330
NO
VOLTAGE LID EXCEEDED?
335
NO
CURRENT BELOW THRESHOLD?
337
YES
INDICATE CHARGE COMPLETE
339
YES
STOP
340

BATTERY CHARGER AND METHOD OF CHARGING A BATTERY

CROSS-REFERENCE TO RELATED APPLICATIONS

[0001] This application is a continuation-in-part of, and claims priority to, U.S. patent application Ser. No. 10/603,879 filed Jun. 24, 2003, which itself claims priority to U.S. Provisional Patent Application Ser. No. 60/450,947 filed Feb. 28, 2003, of which the entire contents of both applications are hereby incorporated by reference.

FIELD OF INVENTION

[0002] This invention relates generally to systems and methods for charging batteries and vehicles with on-board charging systems.

BACKGROUND OF INVENTION

[0003] Rechargeable batteries have been used for electrical energy storage in a wide range of applications including their use in vehicles, power tools, lap-top computers, mobile phones, two-way radios, lights, and uninterruptible power supplies. Vehicles that use rechargeable batteries include automobiles, boats, and aircraft that have batteries for starting the vehicle, electric vehicles including golf carts, and hybrid electric vehicles. Hybrid electric vehicles typically have both batteries and another source of power, such as an internal combustion engine and a generator, a fuel cell, or photovoltaics.

[0004] Electric chargers and methods of charging have been developed and used for charging batteries, including batteries in electric vehicles. Chargers have been used in stationary applications, and have also been installed on vehicles to charge batteries located on the vehicles. Stationary chargers that use power from the electric power grid have also been widely used. Chargers located on vehicles may also be configured to plug into the electric power grid, or may obtain power from an on-board source of power, such as an internal combustion engine, or from a motor/generator used for regenerative braking as the vehicle decelerates.

[0005] In the case of stationary applications, chargers have typically been designed to charge one particular type of battery. However, batteries are currently being used of various types, each typically requiring its own voltage, current, and the like for optimal charging. Chargers have been invented that can charge more than one type of battery, wherein the user can manually select the type of battery to be charged. However, this requires a user to select the correct type of battery, and there is a risk that the user may inadvertently select the wrong type. This could result in a failure to charge the battery and could damage either the battery or the charger. Thus, a need exists for a charger that can automatically identify the type of battery that it is connected to and charge the battery in a safe, efficient, and convenient manner.

[0006] In addition, in the past, chargers have typically been relatively slow. Many chargers have been designed to charge a battery slowly to avoid charging it too quickly or overcharging it. But in many applications, this results in the battery, or electric vehicle, for example, being out of operation for a long time while it is being charged. In many applications, a need exists for a charger that can charge a battery at or near the optimum or maximum rate at which the battery can be safely charged. Also, a need exists for a method for charging batteries that can be used reliably to charge batteries at or near the optimal or maximum rate. In the specific application of electric vehicles, a need exists for a charger that will quickly charge an electric vehicle while the operator waits, similar in experience to fueling a fossil-fuel powered vehicle.

[0007] Furthermore, in the past, many chargers have been bulky and heavy, and a need exists to reduce their size, mass, or both. For instance, chargers have been developed that use alternating current, and transform the alternating current from one voltage to another using one or more wire-wound transformers. The transformer or transformers typically form a substantial portion of the size and mass of such chargers. Large transformers for 60-cycle operation were typically used. Thus, a need exists to reduce the size and mass of chargers, and specifically the size and mass of transformers used in chargers. This need exists for stationary transformers, but may be even more important in vehicles where the charger must be carried around on board the vehicle.

[0008] Even further, a need exists for battery chargers, including electrical vehicle and hybrid electric vehicle chargers, and methods of charging batteries, that fulfill a plurality or all of these needs, are capable of quickly charging most types of batteries used in the particular application, are easy and safe to use, and inexpensive to manufacture and maintain. Other needs exist that are apparent from this document.

SUMMARY OF INVENTION

[0009] One object of the present invention is to provide a charger that can automatically identify the type of battery that it is connected to and charge the battery in a safe, efficient, and convenient manner. Another object is to provide a method for charging batteries that can be used reliably to charge batteries at or near the optimal or maximum rate. In the specific application of electric and hybrid electric vehicles, an object of the present invention is to provide a charger that will quickly and conveniently charge such vehicles while the operator waits, similar to refueling a fossil-fuel powered vehicle. Further objects include to provide a charger of reduced size, mass, or both, that is inexpensive, reliable, and able to charge most or all types of batteries at a rate near optimal. Thus, it is an object of the present invention to reduce the size and mass of chargers, and specifically the size and mass of transformers used in chargers, for both stationary applications and applications on-board vehicles. Other objects of the present invention include providing chargers that are easy and safe to use, and inexpensive to maintain.

[0010] Still other objects of the present invention are to provide vehicles, including electric vehicles and hybrid electric vehicles that include chargers in accordance with the present invention that at least partially fulfill at least some of these objectives.

[0011] In at least partial fulfillment of at least some of these and other objects and needs, the present invention provides a battery charger for various purposes, and an

electric-vehicle charger specifically for charging electric vehicles. In some embodiments, the charger may be stationary, and may be powered from an electric utility power grid, while in other embodiments, the charger may be located on a vehicle. In some embodiments, the charger may be configured to charge at a plurality of direct-current output voltages, and may be configured to automatically determine the voltage of the battery being charged and supply the correct output voltage. The capacity of the charger may, for example, be such that the charger is configured to charge in the range of about 30 amps to about 300 amps, with a voltage in the range of about 12 volts to about 700 volts, or both.

[0012] The charger may include a variable alternating-current power supply configured to output a first alternating current of a controllable power level. The power supply may be configured to input electrical power (e.g., from the power grid), and may include a rectifier or other switching device, for example, to convert input AC power to DC. In some embodiments, the power supply may be a variable-frequency generator, and may output a first alternating current of a controllable frequency. The variable-frequency generator may be configured so that the first alternating current has a substantially higher frequency than that of the input electrical power.

[0013] The charger may also include a digital controller configured to control the power supply, and this control may include control of the power level of the first alternating current output. In embodiments where the power supply is a variable-frequency generator, the digital controller may be configured to control the frequency of the first alternating current. The charger or controller may be configured to measure the voltage, current, or both of the direct-current output, and may use these measurements to make various control decisions. The controller may also be configured to enable an indication, for example, to alert the user when the battery is substantially charged.

[0014] The charger may also have a first transformer configured to change the voltage of the first alternating current to a second alternating current, and this first transformer may be a foil-type transformer, for example, with copper foil. The first transformer may, for example, be configured so that the second alternating current has a lower voltage and a higher amperage than the first alternating current. The charger may also have a rectifier or other switching device configured to convert the second alternating current to a direct current. Some embodiments may also have a filter configured to filter the direct-current output, which may include an inductor, a capacitor, or a plurality of such devices.

[0015] In some embodiments, the charger may also include a second transformer configured to supply power to the controller, and this second transformer may also be a foil-type. In addition, in some embodiments, the charger may be configured to communicate with a digital diagnostic device, for instance, configured to facilitate maintenance of the battery charger or to diagnose faults.

[0016] Some embodiments of the charger may include a card reader configured to enable the charger, and electric-vehicle chargers may also have a multi-pin connector configured to connect to an electric vehicle and deliver the direct-current output to the vehicle.

[0017] The present invention also provides a vehicle having a charger in accordance with the present invention. The vehicle generally has one or more batteries located on board. In some embodiments, the electrical power for charging the batteries may be supplied from a substantially-constant voltage source external to the vehicle, for example, through a cord and a connector. This voltage source may be, for example, the power grid. In some embodiments, the batteries may be charged from a power source located on the vehicle. In such embodiments, the vehicle may include a first electrical generator configured to output electrical power. The vehicle may also include an internal combustion engine, which may be configured to drive the first electrical generator. Alternatively, or in addition, the electrical generator may be configured to recover energy from the braking of the vehicle, may function as a motor configured to drive the vehicle, or a combination of these.

[0018] The present invention even further provides a method of charging at least one battery that may include at least the steps of measuring the substantially open-circuit voltage, and then, using the substantially open-circuit voltage, selecting a first power level for charging. The method may also include starting to charge the battery at the first power level, and measuring the charging voltage and the charging current. The charging power level may be increased until either a current lid or a voltage lid is exceeded. Where a voltage lid is involved, it may be based on the open-circuit voltage, and may be adjusted based on the temperature of the battery, for example. Constant voltage charging may occur, which may be substantially at the voltage lid.

[0019] In some embodiments, increasing the charging power level may involve a first rate of increase and a second rate of increase. The first rate of increase may occur before the second rate of increase, and the first rate may be greater than the second. The change from the first rate of increase to the second rate of increase may be triggered by a substantial cessation of increasing of the charging voltage, or by the charging current exceeding a minimum value. In some embodiments, the step of increasing the charging power level may include increasing a frequency, for example, of a variable-frequency generator. The power level and the frequency may be increased. The variable-frequency generator may have an alternating current output, which may be transformed with a foil-type transformer.

[0020] The method of the present invention may also include charging a battery until a current threshold is reached, which may be at a substantially constant voltage. The charging may be stopped when the current reaches the current threshold. The method may also involve charging at a substantially constant current until the voltage lid is exceeded.

[0021] In some embodiments, there may be a precursory step of partially charging the battery, for example where the battery was overly discharged. In addition some embodiments of the method of the present invention may include terminating the charging function (or step), and verifying the open-circuit voltage. Alternatively, the substantially open-circuit voltage may be used to estimate a charging current at a particular power level, and the charging current may be verified to be within acceptable parameters at that particular power level. These steps may be taken to verify that the

correct type of battery has been identified or that the identified battery is performing according to acceptable specifications for the programmed algorithm. If a battery is not performing as expected, the charger will recognize this and modify or terminate the charging algorithm to protect the battery system, vehicle and charging equipment. Various embodiments of chargers, vehicles, and methods in accordance with the present invention may have various combinations of these and other features.

BRIEF DESCRIPTION OF THE DRAWINGS

[0022] The figures in this document illustrate various exemplary embodiments of the present invention. Embodiments of the present invention may include part or all of the features shown in one of these drawings, or may include features from two or more figures. Embodiments of the present invention may also include features described in the specification, or limitations to features described in the specification. Furthermore, embodiments of the present invention may include features that would be familiar to a person of ordinary skill in the art having studied this document.

[0023] **FIG. 1** is a front view of a charger in accordance with the present invention connected to a vehicle;

[0024] **FIG. 2** is a block diagram illustrating various components of on embodiment of a charger in accordance with the present invention; and

[0025] **FIG. 3** is a flow chart illustrating a method of charging in accordance with the present invention.

DETAILED DESCRIPTION

[0026] In general, various embodiments of the present invention include stationary, mobile, and on-board battery chargers, methods of charging batteries, electric-vehicle chargers, and vehicles with chargers, including electric vehicles and hybrid electric vehicles. Chargers in accordance with the present invention may automatically charge at the correct battery voltage for various types of batteries. Chargers in accordance with the present invention generally have variable AC power supplies that are controlled by digital controllers. Chargers generally also have isolation transformers which may change voltage and current, and rectifiers or other switching devices to convert alternating current to direct current. In some embodiments of the present invention, transformers may be foil-type, and may have copper foil, while in other embodiments, transformers may be a wire wound type. Foil transformers may reduce the size and weight (mass) of the charger. Power supplies may be variable-frequency generators and the controllers may control the frequency of the output of the power supplies.

[0027] Electric vehicle chargers may have card readers, which may, for example, be credit card compatible, for billing credit cards. Further, vehicles in accordance with the present invention (e.g., hybrid electric vehicles) may have a generator or motor/generator driven by an internal combustion engine or configured to recover braking energy. One or more electric motors or motor/generators may also drive the vehicle. Vehicles in accordance with the present invention generally also have batteries and a charger.

[0028] Methods of charging generally may include identifying the battery type and gradually increasing the charging at different rates while monitoring the charging voltage, the charging current, or both, until a current lid is reached. Two rates of increasing the power level may be used.

[0029] **FIG. 1** illustrates an exemplary embodiment of a charger in accordance with the present invention. Charger **100** is connected to an exemplary embodiment of a vehicle **150**. Charger **100** may be an electric-vehicle charger, meaning that it may be configured to charge batteries (e.g., batteries **152**) that are located on electric or hybrid electric vehicles (e.g., vehicle **150**) which are used, at least in part, to power at least one electric motor to move the vehicle. In other embodiments, however, charger **100** may be used to charge batteries used for other purposes, including those purposes identified herein.

[0030] Thus, although charger **100** is shown charging vehicle **150**, chargers in accordance with the present invention may be used for stationary battery charging in energy storage (such as load shifting, or brown out/blackout ride through or other "non-floating" charge applications), portable electric energy equipment, and distributed or renewable electrical energy battery applications such as, solar, wind, tidal or wave, and geothermal primary energy sources.

[0031] In the exemplary embodiment illustrated, charger **100** is configured to charge electric vehicles including hybrid electric vehicles, and is connected to the power grid **105** via cable **120**, and to vehicle **150** via cable **125** and plug or connector **126**. Cable **120** may be a multi-conductor insulated cable suitable for the application, and may carry, for example, single-phase or three-phase alternating current of 50 or 60 Hz, and may be a standard voltage. Cable **125** may also be a multi-conductor insulated cable suitable for the application, and may carry, for example, direct current of a voltage and current suitable for charging the battery pack or batteries **152** of vehicle **150**. In an exemplary embodiment, charger **100** may be configured to provide a charging current in the range of about 30 amps to about 300 amps DC, and a charging voltage in the range of about 12 volts to about 700 volts DC.

[0032] In an exemplary embodiment, charger **100** may include a multi-pin connector **126** configured to connect to an electric vehicle **150** and deliver the direct-current output (e.g., direct current **293** described below) to the vehicle **150**. Thus, connector **126** may be a vehicle connector, for example, a nine pin connector, and may have two large main conductors, a ground (also large), and, for example, six smaller conductors available for control purposes (control pins). Cable **125** may have corresponding individually-insulated conductors. Connector **126** may be, for example, a Society of Automotive Engineers (SAE) J1772 connector design, e.g., as manufactured by ITT CANNON or AVCON. In an exemplary embodiment, the allocation of the 9 pins may be as follows: (−) battery negative; (G) GROUND; (+) battery positive; (1) vehicle power supply (e.g., 240, 110, or 24 volt AC); (2) vehicle power return (e.g., 110 volt or DC); (3) safety pilot supply; (4) safety pilot return; (5) analog or digital circuit; and (6) analog or digital circuit. The analog or digital circuits may provide, for example, information on the type or voltage of the battery (e.g., battery, battery pack, or batteries **152**), battery temperature (e.g., during charging), communication from an on-board battery management system, etc.

[0033] Charger **100** may deliver electricity for many different battery chemistries or classifications in many different

types of arrangements or groups of individual battery cells (collectively, types of batteries, as used herein), within a range. In one embodiment, this normal battery pack voltage range may be, for example, in the range of about 36 volts to about 700 volts. In other embodiments, the lower voltage limit may be 12 volts or 24 volts, for instance. Battery or batteries **152** may be, for example, lead-acid batteries including flooded or valve regulated (VRLA) types, nickel-based batteries, or lithium-based batteries. Batteries **152** or individual cells thereof may be wired or arranged in series, in parallel, or in some combination thereof, and may form battery packs.

[**0034**] Charger **100** may be configured to charge in partial "fast or opportunity" charging or full charging modes. Hence, in the fast or opportunity charging mode, charger **100**'s refueling ability for battery-powered electric vehicles **150** may be equated to a gasoline pump at a service station, which may be capable of refueling a wide range of fuel-powered vehicles regardless of make or horsepower rating. In some embodiments, charger **100** may be configured to dispense motor vehicle fuels as well as charge batteries (e.g., electric vehicles) or charger **100** may be part of a motor fuel dispenser or motor fuel service station. In embodiments where fuels are dispensed in close proximity to where charging is being performed, for example, charging batteries while refueling hybrid vehicles, care must be taken to avoid possible ignition of fuel vapors, for example, from static or other electric discharge.

[**0035**] **FIG. 1** illustrates the exterior of charger **100**, which includes in the exemplary embodiment illustrated, enclosure **102**, key pad **104**, screen **107**, card reader **110**, and printer **111**. Other embodiments of charger **100** may not require control devices or buttons on its exterior. Enclosure **102** may be an electrical enclosure of a type suitable for the environment in which charger **100** is located. An exemplary embodiment of the contents of enclosure **102** is shown in **FIG. 2** and described below with reference thereto.

[**0036**] Still referring to **FIG. 1**, a user may activate or enable charger **100** by swiping a card through card reader **110**, which may be a credit card, debit card, access card, user identification card, vehicle identification card, or the like. Charger **100** may provide instructions or prompt the user for information via writing on screen **107**, and the user may input information via key pad **104**. Such information may include, for example, a personal identification number (PIN) for a debit card, an access code, whether the User wants a receipt, whether the user wants to purchase a car wash, etc. A receipt may be printed by printer **111**. Charger **100** may also have one or more indicator lights **108**, which may indicate, for example, when charging is complete or if there is a fault detected in the charger or the battery. In addition of or in lieu of indicator lights **108**, charger **100** may have one or more gauges. These gauges or screen **107** may indicate the charging rate, the amount of time estimated to complete the charge, the bill for the fuel purchased, or other information that may be of use to the user. In some embodiments, Light emitting diode (LED) or liquid crystal displays (LCD) on the front of the charger **100** (e.g., on enclosure **102**) may provide some or all of the functions of screen **107** or indicator lights **108**. These functions may include indicating that the battery is connected, that the charging sequence is initiated, the charge rate, that the charge is complete, that there is a battery, charging equipment or utility supply fault, or some combination of these indications. Basic maintenance diagnostics and trouble shooting for the charger **100** may also be displayed.

[**0037**] Also illustrated in **FIG. 1** is diagnostic device **130**, which may be configured to communicate with charger **100**. Diagnostic device **130** may be connectable to charger **100**, for example, via cord **131**, or may communicate with charger **100** by another means, for example, via cellular telephony, infrared serial link, or wireless local area network. Diagnostic device **130** may be hand held, may have a key pad and screen as shown, and may be configured to diagnose faults within charger **100**, program charger **100**, provide additional charging information, etc. Diagnostic device **130** may be a personal digital assistant (PDA), and may be configured to be used by a technician having more knowledge than a typical user of charger **100**. Diagnostic device **130** may also (or instead) allow manual control of battery charging, or programming of charger **100**. In some embodiments of charger **100**, manual control may be necessary or advantageous for charging a battery that has been overly discharged, for example. Thus, charger **100** may be configured to communicate with digital diagnostic device **130** configured to facilitate maintenance of the battery charger or diagnosis of faults. There may be two separate accessory devices that provide diagnostics and manual control, or these features may be provided by charger **100**, for example via screen **107** and key pad **104**.

[**0038**] Turning now from the stationary charger **100** to the vehicle **150**, in the exemplary embodiment illustrated in **FIG. 1**, vehicle **150** is a car, but in other embodiments, vehicle **150** may be another type of vehicle such as an industrial cart, golf cart, all terrain vehicle or personnel carrier such as used in airports or at resorts, an electric boat, an industrial or commercial vehicle or piece of equipment, a CFR 49 DOT defined vehicle, a wheel chair, a personal transportation device, a two or three wheeled motorcycle or scooter, or a SEGWAY, human transporter. Vehicle **150** may have batteries **152**, which in some embodiments of vehicle **150** may be charged periodically with stationary charger **100**. In other embodiments of vehicle **150**, there may be an on-board charger **160** in accordance with the present invention. Charger **160** may be used in lieu of charger **100**, and may input electrical power from an external source, such as power grid **105**, for example, via cord **120** or **125** and connector **126**, or similar such components. In such embodiments, the electrical power input by charger **160** may be supplied from a substantially-constant voltage source external to vehicle **150**, for example, through cord **120** or **125**, and connector, for example, connector **126**. Charger **160** is an electric-vehicle charger, as that phrase is used herein, and power grid **105** is a substantially-constant voltage source as that phrase is used herein.

[**0039**] In some embodiments, chargers in accordance with the present invention may be used for batteries that are used primarily just for starting motors or other equipment. For example, charger **100** may be used for battery maintenance, auxiliary battery maintenance, or both, for example, in internal combustion engine vehicles, hybrid electric vehicles, turbine powered equipment, marine equipment, or aerospace vehicles. Battery maintenance may be performed using diagnostic device **130**.

[**0040**] Chargers in accordance with the present invention, including charger **100**, may also be used as a variable power

source to produce DC electricity from conventional grid power in various other commercial or industrial applications, including welding equipment, impressed current for cathodic protection, production of hydrogen, oxygen, or both from water in electrolyzers or electrolysis equipment, operating DC motors, providing power for DC signals, providing power for computers or semiconductor devices, etc. In the example of electrolysis, for example, for production of hydrogen, charger **100** may be used as a source of DC power for production of hydrogen at night (off peak) when utility power is plentiful. In one embodiment, the same charger **100** may be used for opportunity charging (as needed) during the day time (on-peak) and for electrolysis of hydrogen at night (off-peak).

[**0041**] Turning now to **FIG. 2**, charger **100** may be connected to and powered by input power **205**, which may be power grid **105** illustrated in **FIG. 1**. Input power **205** may be delivered by cable **120**. Input power **205** may be grounded, and may be, for example, alternating current (AC) power at 60 or 50 Hz, 3 phase, for instance, 208 or 480 volt; AC power 60 or 50 hertz, for instance, 200 to 240 volt single phase; or direct current (DC), for instance, a range between approximately 270 volts to approximately 360 volts DC or a range between approximately power. These ranges are software selectable and dependent on the native grid infrastructure where the input power is generated. Thus, Charger **100** may be adapted or reconfigured to a variety of power sources or delivery modes dependent on where the unit is located.

[**0042**] Some embodiments of charger **100** may be configured to work with a variety of types of input power **205**. In such embodiments, the performance of charger **100** may vary depending on the input power **205** supplied. For example, single phase input power **205** may result in a lower peak output power (e.g., direct current **293** described below) as compared to three-phase input power **205**. Single-phase power may typically be found in residential or light commercial environments. In many installations, single-phase power may be limited to 240 volt nominal and a maximum of 48 ampere (80% of 60 ampere circuit breaker), and the maximum power DC output (e.g., direct current **293**) may be limited to about 55 amps when charging a 96 volt battery. Thus, the power output may be reduced to about 6 KW from 10 KW when going from 208 volt three phase to 240 volt single phase.

[**0043**] Three-phase electricity is commonly available in North America at 208 volt and 480 volt. European electricity is commonly available at 230 volt three phase. In some embodiments, charger **100** may be configured to accommodate some combination of these numbers of phases and voltages, and both 50 and 60 Hz supply frequency. The controller **270** (described below) may sense supply power (input power **205**) as single or three phases by monitoring the power input terminal points. The Charger **100** or controller **270** may adjust internal functions and output power (direct current **293**) based upon whether input power **205** is single or three phase power.

[**0044**] Focusing now on the various components of a charger in accordance with the present invention, for example, the contents of enclosure **102**, **FIG. 2** illustrates an exemplary embodiment of the components of stationary charger **100**. The components of on-board charger **160** may be similar except as would be apparent to a person of skill in the art. Input power **205** may be delivered through a circuit breaker, fuse block, or fuse **222**, which may be provided for circuit protection. In embodiments where input power **205** is AC, charger **100** may include rectifier **228**, which converts input power **205** to direct current **229**. In embodiments where input power **205** may be either AC or DC, rectifier **228** may be bypassed when input power **205** is DC. For instance, DC input power **205** may be connected to the rectifier **228** output bus or to the input to power supply **240**. Embodiments of the present invention configured to use only DC input power **205** may omit rectifier **228**.

[**0045**] As just mentioned, Charger **100** generally also includes a variable power supply **240**, which generally outputs alternating current **241**, which may be referred to herein as the first alternating current. Power supply **240** may be a variable alternating-current power supply configured to output a first alternating current of a controllable voltage or power level. Rectifier **228** may be part of power supply **240**. Thus, power supply **240** may comprise rectifier **228**. Power supply **240** generally has a variable voltage or power output, and may have a variable frequency output as well. In other words, the voltage or power level of alternating current **241** may vary, and in some embodiments, the frequency of alternating current **241** may also vary. In some embodiments, power supply **240** may be a variable-frequency or variable-speed drive or generator which, for instance, may be suitable for driving an AC motor over a range of speeds. Thus, power supply **240** may be a variable-frequency generator configured to input electrical power (e.g., input power **205**) and output a first alternating current **241** of a controllable frequency wherein the output voltage and frequency may have a defined and piecewise proportional relationship to each other. In such embodiments, power supply **240** may be configured to provide more power (voltage, current, or both) at higher speeds (frequencies).

[**0046**] Power supply **240** may be either a constant voltage source, or a constant current source, or may produce power (alternating current **241**) at a current and voltage that are generally inversely related at a constant power setting. The power output (alternating current **241**) of power supply **240** may remain relatively constant over a range of voltages, or may vary with voltage, but generally will not vary as much as that of a constant current source. Similarly, the power output (alternating current **241**) of power supply **240** may remain relatively constant over a range of currents, or may vary with current, but generally will not vary as much as that of a constant voltage source.

[**0047**] Power supply **240** may be a variable-frequency current device or generator which may be available commercially as a variable-speed motor drive. Power supply **240** may produce alternating current **241**, which may be single or multi-phase power for example, three-phase, and may be substantially sinusoidal power. Power supply **240** may be configured so that first alternating current **241** has a substantially higher frequency than that of the input electrical power (e.g., input power **205**). Alternating current **241** may have a frequency, for example, of 400 to 800 hertz. The switching or carrier frequency may vary from 4 kHz to 10 kHz. xyz The switching frequency may be held constant as output frequency is increased to change the charge voltage for the battery. Further, increases in output frequency may correlate with output current or power increases from power

supply **240** (e.g., increases in alternating current **241**). This may be the case, for example, for embodiments wherein power supply **240** is a variable-speed drive or variable-frequency generator. The size of power supply **240** may vary, for example, from 3 KW to 20 KW. In some embodiments, power supply **240** may produce even greater output power.

[**0048**] The switching or carrier frequency of power supply **240** may be substantially higher than the output frequency it generates. The switching or carrier frequency may be selected separately from the output frequency. The output frequency of power supply **240** may set the voltage and current gains of the output. Thus the device architecture may benefit from the presence of two distinct frequencies being generated, a output frequency and a switching or carrier frequency. The output frequency may be selected to maximize current and voltage control, while the carrier frequency may be selected to optimize the size and performance of components such as filter **291** without affecting the ripple reduction characteristics of filter **291**. The carrier frequency may also be selected to optimize the size and performance of transformer **280**, which may be a foil type or wire wound transformer.

[**0049**] Power supply **240** may be controlled by controller **270**. Controller **270** may be a digital controller configured to control power supply **240**, and the control that controller **270** has over power supply **240** may include (at least) control of the power level of the first alternating current **241**. Thus, controller **270** may communicate with or control power supply **240** to control the power level of alternating current **241**.

[**0050**] In some embodiments, controller **270** may control the frequency of alternating current **241**. Thus, charger **100** may include a digital controller **270** configured to control the frequency of said first alternating current **241**. This is the case, for example, in embodiments wherein power supply **240** is a variable-speed drive or variable-frequency generator. Thus, controller **270** may be a digital controller configured to control a variable-frequency generator (e.g., power supply **240**), and the control may include at least control of the frequency of first alternating current **241**. The power (voltage, current, or both) may also be controlled, and may vary with frequency, directly, generally, or otherwise.

[**0051**] Controller **270** may be a digital controller, and may include a circuit board with a processor and memory for data storage. Controller **270** may have, for example, 8 analog to digital channels, and 12-bit digital channel resolution. Controller **270** may comprise software configured to perform the functions described herein, including digital control, display and diagnostics. There may be a plug from controller **270** to charger **240**, for example, a 24 pin plug. The memory of controller **270** may include one or more look-up tables, for example, look-up table **272**. In other embodiments, charger **100** may utilize memory or look-up tables (e.g., **272**) that are separate from controller **270**.

[**0052**] Look-up table **272** may be used to store information on various types of batteries that may be charged by charger **100**. Look-up table **272** may be part of a battery classifier or system configured to identify the type of battery pack or battery (e.g., **152**) being charged, which may include, for example, the nominal or open-circuit voltage, the maximum or optimal charging voltage, the threshold current or current at which charging should be stopped, etc.

[**0053**] Controller **270** may be powered by input power **205**, which may be reduced to a lower voltage via step down transformer **225**. For instance, step down transformer **225** may take incoming AC power (e.g., input power **205**) and step it down to 24 volts AC for control power. Step down transformer **225** may be connected to the rectifier **228** input of power supply **240**. In some embodiments, step down transformer **225** may be a foil-type transformer, for example, of the general type described herein for transformer **280** (described below). Thus, in such embodiments, charger **100** may further comprise a foil-type second transformer **225** (in addition to transformer **280** described below) configured to supply power to controller **270**. Using a foil-type transformer for step-down transformer **225** may reduce size, mass, or both. Thus, charger **100** may be lighter in weight and smaller than other fast chargers known in the art.

[**0054**] Controller **270** may interface or communicate with diagnostic device **130**, card reader **110**, or both. Controller **270** may be compatible with standard credit card commercial fuel systems (e.g., for petroleum). Hence charger **100** may be used to charge or refuel battery powered vehicles, such as low speed vehicles (for example, those vehicles in compliance with 49 CFR 571.500) at commercial establishments, for example, service stations, grocery stores, restaurants, golf courses, and the like.

[**0055**] Controller **270** may also communicate with the user, for example, via key pad **104**, screen **107**, or lights or gauges **108**, all illustrated in **FIG. 1** and described above with reference thereto. In other words, controller **270** may interface or communicate with these devices **104**, **107**, **108**, or some combination thereof.

[**0056**] Controller **270**, card reader **110**, or both, may interface or communicate with network **275**, which may be, for example, a credit card network or the Internet. Network **275** may obtain information from controller **270** or from card reader **110**, or may provide information to these components. Network **275** may be used, for example, to authorize credit card purchases, remotely monitor the use of charger **100**, program controller **270**, provide data for look-up table **272**, perform the functions of diagnostic device **130**, etc.

[**0057**] Power supply **240** may be electrically connected to transformer **280**, and transformer **280** may change the voltage of first alternating current **241** to a second alternating current **282**. Thus, charger **100** may have a first transformer **280** configured to change the voltage of first alternating current **241** to a second alternating current **282**. For instance, transformer **280** may reduce the voltage and increase the current of alternating current **241**, producing alternating current **282**. In other words, first transformer **280** may be configured so that second alternating current **282** has a lower voltage and a higher amperage than first alternating current **241**. In another embodiment, transformer **280** may increase the voltage and reduce the current of alternating current **241**, producing alternating current **282**. In other words, first transformer **280** may be configured so that second alternating current **282** has a higher voltage and a lower amperage than first alternating current **241**.

[**0058**] Transformer **280** may function as an isolation transformer, isolating alternating current **282** from alternating current **241**. The isolation transformer may provide a level of safety by reducing the maximum voltage that may be produced at connector **126** with respect to ground.

[0059] Transformer **280** may generate some heat, as a result of the current that flows through it, and this heat may be dissipated via heat sink **287**, fan **288**, or both. Fan **288** may be driven by an electric motor and may be thermostatically controlled, for example, to cycle on and off as needed.

[0060] In various embodiments, transformer **280** may be, for example, a wire-wound dry transformer, or a foil-wound (a.k.a., foilwound) or foil-type transformer, which may be, for example, a high-frequency low-voltage differential isolation transformer. In an exemplary embodiment, transformer **280** performs a step-down function, for example, from 1000 volts (first alternating current **241**) to 700 volts (second alternating current **282**) (both nominal voltages RMS) at a maximum of 300 amps. Different battery pack or battery (e.g., battery **152**) voltage (voltage of direct current **293** described below) could be accommodated based upon output voltage at the power supply (voltage of alternating current **241**). The ratio of transformer **280** may determine the charging range.

[0061] In embodiments of charger **100** wherein transformer **280** is a wire-wound transformer, transformer **280** may be a copper-iron wire-wound type. Higher frequency operation may reduce the size of transformer **280**, but may also increase the heat rise in the iron and copper windings. Changing operation frequency may increase the thermal efficiency and may minimize the thermal difference between the iron and copper. In embodiments of charger **100** wherein the frequency of alternating current **241** produced by power supply **240** varies, as controller **270** increases the output frequency of power supply **240** (of alternating current **241**), the thermal characteristics of transformer **280** may change. Controller **270** may set the output frequency of power supply **240** (of alternating current **241**), to minimize (or seek the best compromise between) transformer **280** heating and temperature differences between the iron and copper winding. To further reduce the impact of heating the copper winding, secondary wire size may be reduced, e.g., from a #5 wire to two #7 wires in the transformer (e.g., transformer **280**).

[0062] In embodiments of charger **100** wherein transformer **280** is a foil-type transformer, transformer **280** may be a dry type foil isolation transformer, for example, designed for 60-cycle operation, or may be a high-frequency foil transformer of a type used in aerospace functions. Foil-type transformer **280** may have metal sheets or plates (foil) with sheets of insulation in-between, and may be wound or rolled into a spiral. The insulation may be, for example, polyester, fiberglass, or nomex, and may be impregnated with an epoxy resin. The metal plates may be aluminum or copper, for example. Aluminum foil-type transformers are generally lighter in weight, but copper foil-type transformers are generally smaller due to the higher electrical conductivity of copper. A foil-type transformer may have higher ambient operating temperature capability than a wire-wound transformer, and may have better electrical efficiency. In addition, a foil-type transformer **280** may have the safety advantage of low voltage steps (2-3 volts) between windings, and hence may have a substantial safety advantage over conventional transformers in the event of a short circuit between windings. Further, its high frequency foil design may result in about a 5:1 reduction in weight and also smaller physical size. Due to its smaller size, it may need to have a heat sink **287** to maintain thermal performance. Forced air cooling from fan **288** may also be required for a foil-type transformer **280**. But higher efficiency and lower heat gain may result in using a foil-type transformer **280** rather than a wire-wound type, and higher operating frequencies (e.g., of alternating current **241**) may be possible. It may be advantageous for controller **270** to control the frequency (e.g., of alternating current **241**) to avoid heating problems with transformer **280**.

[0063] Still referring to **FIG. 2**, second alternating current **282** may be converted to direct current **293** by rectifier **290**, which may be filtered by filter **291**. Thus, charger **100** may include rectifier **290**, which may be configured to convert second alternating current **282** to direct current **293**. Direct current **293** may be the output of charger **100** (e.g., to vehicle **150** or batteries **152**). In an exemplary embodiment, charger **100** may be configured to provide a direct current **293** in the range of about 30 amps to about 300 amps, and voltage in the range of about 12 volts to about 700 volts DC.

[0064] In some embodiments, rectifier **290** may be integral with filter **291** in one component. Filter **291** may include an inductor, a capacitor, or both, or may include a plurality of capacitors and inductors. Filter **291** may reduce the DC "ripple" for high quality battery charging. Quality of the charge may be defined as the control over the charging voltage (e.g., of direct current **293**) or lack of variation. The inductor may be either wire-wound or foil type inductor. Foil inductors may reduce the size and weight when compared to conventional copper wire-wound assemblies. The switching or carrier frequency of power supply **240** may be substantially higher than the output frequency it generates. The switching or carrier frequency may be selected separately from the output frequency. The output frequency of power supply **240** may set the voltage and current gains of the output. Thus the device architecture may benefit from the presence of two distinct frequencies being generated, a output frequency and a switching or carrier frequency. The output frequency may be selected to maximize current and voltage control, while the carrier frequency may be selected to optimize the size and performance of components such as filter **291** without affecting the ripple reduction characteristics of filter **291**. The carrier frequency may also be selected to optimize the size and performance of transformer **280**, which may be a foil type or wire wound transformer.

[0065] Meter **295** may measure the voltage, current, or both of direct current **293**, and may communicate this information to controller **270**. Voltage may be measured across a shunt to measure current. For safety to both people and equipment, direct current **293** may be limited in a short circuit by fuse **292**. Direct current **293** may be delivered to one or more batteries. For instance, direct current **293** may be delivered through cord **125** and connector **126** to vehicle **150** and batteries **152**. In other embodiments, direct current **293** may be delivered to other equipment (in lieu of vehicle **150** or battery **152**), such as, for example, electrolysis equipment for the production of hydrogen.

[0066] Focusing for a moment on vehicles in accordance with the present invention, and referring to **FIG. 1**, vehicle **150** may be an electric vehicle, and may have batteries **152** as its only power source. But in other embodiments, vehicle **150** may be a hybrid electric vehicle (HEV), and may have another power source in addition to batteries **152**, for example, engine **157**. In such embodiments, charger **160**

may be configured to input electrical power from an electrical generator located on vehicle **150**, such as generator **155**. Charger **160** may be configured to input electrical power just from generator **155**, or from either generator **155** or from an external power source (e.g., via connector **126** and cord **125**). In embodiments having a generator **155**, generator **155** may, as an example, be connected to engine **157**, and engine **157** may turn generator **155**. Thus, engine **157** may be configured to drive electrical generator **155**. Generator **155** may also function as a motor, and may be configured to drive vehicle **150**, for example, through transmission **158**, or to assist engine **157** in driving vehicle **150**, or both. In other words, electrical generator **155** may also be a motor configured to drive the vehicle **150**. Generator **155** may also act as a starter motor for engine **157**.

[**0067**] Generator **155** may be configured to brake vehicle **150** when deceleration is demanded, and may deliver power from regenerative braking to charger **160** for storage in batteries **152**. Thus, electrical generator **155** may be configured to recover energy (e.g., generate electricity) from the braking of vehicle **150**. In other embodiments, generator **155** may be connected directly to or integral with wheels **153**. In still other embodiments, generator **155** may be, for example, a fuel cell, or an array of photovoltaic cells, and may also apply to non-vehicle applications.

[**0068**] Vehicle **150** may comprise charger **160**, which may comprise various components shown on **FIG. 2**. For instance, vehicle **150** or charger **160** may comprise a variable alternating-current power supply **240** configured to input electrical power (e.g., input power **205**) and output a first alternating current **241** of a controllable power level. Vehicle **150** or charger **160** may also have a digital controller **270** configured to control power supply **240**, and this control may include (at least) control of the power level of the first alternating current **241**. In some embodiments of vehicle **150** or charger **160**, power supply **240** may be a variable-frequency generator and digital controller **270** may be configured to control the frequency of the first alternating current **241**. Vehicle **150** or charger **160** may also have a first transformer **280** configured to change the voltage of the first alternating current **241** to a second alternating current **282**. Transformer **280** may be a foil-type transformer, for example as described herein. Vehicle **150** or charger **160** may even further include a rectifier **290** configured to convert second alternating current **282** to direct current **293**.

[**0069**] In addition to various components shown in **FIG. 2** or described in reference thereto, vehicle **150** may include other components, some of which are shown in **FIG. 1**. For instance, vehicle **150** may have at least one battery pack or battery **152**, which may be configured to store the direct-current **293** output. Vehicle **150** may further comprise a first electrical generator configured to output the electrical power that is used by (input by) charger **160** or power supply **240**. For example, vehicle **150** may include generator **155**, which may generate input power **205** (input to charger **160**). A second electrical generator or motor/generator (or more) may also be provided, for example at or connected to at least one wheel **153**, which may be configured to drive vehicle **150**, recover braking energy, or both. These additional motor/generators may also provide additional driving wheels for low-traction conditions, for example, all-wheel drive or four-wheel drive. In embodiments where motor/generators are provided at more than one wheel **153**, traction may be superior to conventional mechanical all-wheel drive or four-wheel drive systems because torque will be transmitted to one wheel even when the other wheel on the same axle has no traction at all (e.g., when the other wheel is not in contact with the ground).

[**0070**] A charger in accordance with the present invention may perform various steps in the process of charging a battery, for example, in a vehicle. For instance, **FIG. 3** illustrates an exemplary embodiment of various steps included in the method **300** of the present invention, where stationary charger **100** is used to charge, for example, batteries **152** of vehicle **150**. Method **300** is an exemplary embodiment of the present invention of charging at least one battery (e.g., **152**). Controller **270** may perform many or all of these functions, and may include software configured to do so. On-board charger **160** may perform some or all of these steps, except as would be apparent to a person of skill in the art.

[**0071**] As an overview, method **300** may include various starting steps, and steps related to manipulation or control of the charging power level (e.g., of direct current **293**). Many of the steps of method **300** involve controlling the charging power level, for example, by controlling power supply **240**. In the exemplary embodiment illustrated in **FIG. 3**, method **300** includes three phases, preparing to charge (phase **301**), constant current charging (phase **320**), and constant voltage charging (phase **330**). Preparing to charge (phase **301**) includes the steps above line **350**, constant current charging (phase **320**) includes the steps between line **350** and line **351**, and constant voltage charging (phase **330**) includes the steps below line **351**.

[**0072**] In these phases (for example **301**, **320**, and **330**), the voltage and current of the output (e.g., of direct current **293**) may be measured, for example with meter **295**, and this information may be used (e.g., by controller **270**) to control power supply **240**. As will be described below, charger **100** or controller **270** may use this information to determine the type of battery or battery pack, determine what voltage or power level to start charging at, determine when and how quickly to change the charging rate, and when to stop charging and indicate that charging is complete.

[**0073**] Also as will be described in more detail below, charger **100** may start charging at a starting level (which may depend on the type of battery pack or battery), and may incrementally or gradually increase the charging level. Charger **100** may slow the rate of increase of the charging level once the battery starts to accept the charge, but may continue to increase the power level until a current lid is reached. Charger **100** may then maintain that same power level until the charging voltage for the particular type of battery (for example, from look-up table **272**) is reached. Then charger **100** may gradually reduce the charging power level to maintain the same charging voltage (constant voltage charging, phase **330**), until a reduction in charging current indicates that charging is complete.

[**0074**] Focusing now on the details of an exemplary embodiment of a method in accordance with the present invention, and referring to the specific steps illustrated in **FIG. 3**, in phase **301** of preparing to charge, charger **100** may activate or start (step **302**) to function when a potential user activates or turns on charger **100**. The potential user may do this, for example, by swiping a card through card

reader **110** illustrated in **FIGS. 1 and 2**. In some embodiments, the user may start charger **100** (step **302**), for example by pressing a button on charger **100** or connecting connector **126**, and then swiping a card (for step **305**). In any of these embodiments, card reader **110** may be configured to enable charger **100**. As used herein, card reader **110** is said to be configured to enable charger **100**, even if other conditions must exist or other actions must be taken to use charger **100**.

[**0075**] Charger **100** may read the card (step **305**), e.g., reading a credit card or account number. The card may be authorized, for example, or an account debited, as another example, via network **275** shown in **FIG. 2**. Controller **270**'s operation, or that of card reader **110**, may be integrated with a credit card fueling system. For instance, operation may be initiated (step **305**) by a 110-volt credit card reader authorization signal, and controller **270** may, for example, provide DC pulses from 0 to 1000 pulses per unit of energy back to the credit card reader/bank system (e.g., via network **275**). In other embodiments, there may be no card reader **110** (and no step **305** of reading a card), and a user may start (step **302**) charger **100** by pressing a button, for example, or connecting connector **126**. In some embodiments, a user may enable charger **100** either by swiping a card or through another action.

[**0076**] In many embodiments, for safety reasons, charger **100** may be configured to refrain from starting (e.g., step **302**) or to refrain from energizing the power conductors in connector **126**, until one or more of the control pins in connector **126** is connected. Thus, when a battery or vehicle **150** is connected to charger **100**, the safety pilot circuit may be completed enabling charger **100** or power supply **240** to start (e.g., in step **302**). Charger **100** may indicate when connector **126** is connected, for example, via an LED or indicator light **108** or another display. The AC supply (e.g., input power **205**) to charger **100** and/or to power supply **240** may turned "on" (e.g., in step **302**) and the charger **100** may now be ready to proceed with the next step or begin charging. If a card system (e.g., card reader **110**) is incorporated in charger **100**, then the 110-volt AC initialization circuit may be completed by card reader **110** prior to commencement of battery charging. Disconnecting the connector **126** may break the safety circuit and charger **100** or power supply **240** may turn "off". In an exemplary embodiment, the safety pilot circuit may be in series with card reader **110** (of step **305**).

[**0077**] Charger **100** may be configured to charge at a plurality of direct-current (e.g., direct current **293**) output voltages, for example, for different types of batteries (e.g., battery **152**) or different battery packs or numbers of batteries, for example, in series. In some embodiments, charger **100** may be configured to automatically determine the voltage of the battery or batteries (e.g., battery **152**) and supply the correct output voltage (e.g., of direct current **293**). Thus, charger **100** may need to determine what type of battery **152** charger **100** is connected to. Accordingly, the next step that charger **100** or controller **270** may perform may be to measure the voltage (step **308**) of the battery or batteries (e.g., battery **152**). For instance, charger **100** may measure the open circuit voltage of at least one battery **152**.

[**0078**] In some embodiments, there may be more than one battery **152**, for example, wired in series in a battery pack, and charger **100** may measure the voltage of some or all of the batteries **152**, for example, added together. In some cases, there may be a small load or draw on the batteries (e.g., **152**) while charger **100** is measuring the voltage (in step **308**), such that this small load does not significantly reduce the voltage of the battery. As used herein, such a measurement is referred to as measuring the substantially open-circuit voltage of the battery. This measurement (step **308**) may be performed by meter **295** illustrated in **FIG. 2**, and the measurement may be processed, for example, by controller **270**.

[**0079**] Using the voltage (measured in step **308**), charger **100** or controller **270** may then identify the type of battery pack or battery (e.g., **152**) or nominal voltage of one or more batteries. The voltage measurement (from step **308**) may be compared with common voltages (for example, nominal voltage) of battery packs or batteries, which information may be stored in look-up table **272**. If the voltage measurement (from step **308**) fits within a defined range of voltages of battery packs or batteries (as determined, for example, in decision step **310**), then charger **100** may proceed to start charging (step **315**) the battery or batteries (e.g., batteries **152**).

[**0080**] The voltage, current, or power level at which charging is started (step **315**) may depend on the type of battery pack or battery, as indicated by the voltage measured (in step **308**). Therefore, the first power level may be selected based on the type of battery pack or battery (e.g., battery **152**). As used herein, the "type of battery" may include the voltage which may be determined, for example, by the number of cells or the number of batteries connected or wired together, for example, in series. This first power level may be stored in look-up table **272**, for example, sorted according to the type of battery **152**. In the embodiment wherein power supply **240** is a variable-frequency generator, to start charging (step **315**) controller **270** may set the frequency output of power supply **240** at a base frequency stored in look-up table **272**. This base frequency may correspond to a particular starting voltage or power level. Thus, method **300** may include the step of, using the substantially open-circuit voltage (e.g., measured in step **308**), selecting a first power level (e.g., for step **315**) for charging at least one battery (e.g., **152**), and the step of starting to charge (e.g., step **315**) at least one battery (e.g., **152**) at the first power level (e.g., of step **315**).

[**0081**] As used herein, when a second parameter is said to be "based on" a first parameter, this means that the first parameter is used to determine what the second parameter is. For example, if the first parameter is a particular type of battery, or the measurement of a voltage, then the second parameter is "based on" the first parameter if the second parameter is obtained, for example, from look-up table **272** for data corresponding to the type of battery or batteries having that voltage.

[**0082**] If the voltage measured (in step **308**) does not fall within a defined range (in step **310**), for example, corresponding to a type of battery for which information is stored in look-up table **272**, then charger **100** may prompt the user that charging has failed. In some embodiments, if the voltage measured (in step **308**) is at or near zero, indicative of a completely drained or over discharged battery, then charger **100** may apply or add a small charge (step **313**) to the battery

or partially charge the battery (e.g., battery **152**) or batteries. Thus, charger **100** may partially charge battery pack or battery **152** before the main charging process (e.g., phase **320** or **330**) begins.

[**0083**] Charger **100** may apply this small charge to the battery by charging for a short period of time, for example. In one embodiment configured for charging electric or hybrid electric vehicles, for instance, this small charge (added in step **313**) may be one ampere hour of energy. This may be enough to allow the battery pack or battery (e.g., **152**) to produce an open-circuit voltage (measured in step **308**) within the appropriate defined range (as determined in step **310**) stored in look-up table **272**. Charger **100** may then measure the voltage again (step **308**) and determine whether it is within a defined range (step **310**). If the voltage is still not within any of the ranges within look-up table **272**, for example, another small charge may be applied (step **313**), and this process may be continued until the voltage of battery pack or battery **152** is within a defined range. Hence, charger **100** may be able to gently recover or charge a dead or over-discharged battery pack or battery **152**.

[**0084**] In some embodiments, the small charge may be added (step **313**) only a certain number of times. If the voltage (of battery pack or battery **152**, measured in step **308**) is not within a defined range (step **310**) after this certain number of times, charger **100** may stop charging and provide a fault indication (e.g., via screen **107** or indicator lights **108**). For instance, charger **100** may provide a small charge (step **313**) a maximum of three times.

[**0085**] In other embodiments, in the preparing to charge phase (phase **301**), charger **100** or controller **270** may determine the type of battery pack or battery (e.g., battery **152**) via digital or analog information, or a combination of both, provided through the control pins of connector **126**. For example, control pins **5** and **6** may be used for this purpose. In such embodiments, it may not be necessary to measure the battery voltage (step **308**) to determine the type of battery pack or battery, or battery voltage may be measured (in step **308**) to confirm the type of battery pack or battery. Once battery voltage is determined, whether by measurement or other steps, the battery voltage may be displayed, for example, via an LED digital display or screen **107**.

[**0086**] After charger **100** starts charging (e.g., in step **315**), charger **100** may stop charging to verify that the type of battery pack or battery (e.g., identified in step **310**) has been correctly identified. For example, charger **100** may charge at the starting power level (of step **315**) for a few seconds to a number of minutes and then stop charging and measure the open-circuit voltage (step **308**) of the battery or batteries again. If the voltage is again found to be within the same defined range (e.g., in step **310**), then charger **100** may start charging (e.g., step **315**) again, for example, at the same starting voltage, and may proceed to increase the charging power (e.g., step **317**), as described below. On the other hand, if the open-circuit voltage is found to be within a different defined range (e.g., in step **310**) than what was identified before, then charger **100** may start charging (e.g., step **315**) again, but at the starting voltage for the newly defined battery pack or battery type, and may stop charging (e.g., in step **315**) again to verify that the type of battery pack or battery (e.g., identified in step **310**) has been correctly identified this time.

[**0087**] In other embodiments, charger **100** may stop charging at other points in the process (e.g., other steps of method **300**) and check the open-circuit voltage to verify that the battery pack or battery is of the type identified or is within the identified defined range (e.g., in step **310**). Thus, method **300** may include the steps of, stopping the charging (e.g., during step **315**) and verifying the open-circuit voltage (e.g., by repeating step **308**, and possibly step **310**). In still other embodiments, charger **100** may check or monitor the voltage, charging current, or both of battery **152** while charging is taking place, to verify that the variables are within defined parameters. If they are not, charger **100** may stop charging, may provide an indication, and may measure the substantially open circuit voltage (step **308**) again, and reevaluate (e.g., in step **310**) whether the correct type battery pack or battery **152** has been identified.

[**0088**] Charger **100** may also (or instead) check the charging current to verify that the type of battery pack or battery (e.g., identified in step **310**) has been correctly identified. For instance, charger **100** may measure the charging current (e.g., direct current **293**), for example, while charging at the starting power level (e.g., of step **315**). If the charging current is different than would be expected for the identified type of battery pack or battery at the starting power level (e.g., of step **315**) then charger **100** may stop charging, measure the charging voltage (step **308**) and reevaluate whether the battery pack or battery fits within the defined range previously identified (e.g., in step **310**). Thus, method **300** may further include the steps of, using the substantially open-circuit voltage (e.g., from step **308**), estimating a charging current (e.g., direct current **293**) at a particular power level (e.g., the starting power level of step **315**), and verifying that the charging current is within acceptable parameters at that particular power level. In other words, the current must be close enough to what was estimated that erroneous determination of the battery type or voltage (e.g., in step **310**) is not reasonably suspected.

[**0089**] Charging may be started (step **315**), at a rate of charging or first power level (e.g., of direct current **293**) that is less than required or optimal to charge the particular type of battery. In some embodiments, the first power level may be less than is required to start charging the battery at all. But charger **100** may gradually increase the charging power (step **317**), or power level of direct current **293**, for example, at a first rate of increase. In the embodiment wherein power supply **240** is a variable voltage/variable frequency generator with a defined relationship between output voltage and output frequency, the frequency output of power supply **240** may be increased, for example, at a rate of 10 Hz per second.

[**0090**] While increasing the charging power (step **317**), charger **100** may evaluate whether battery **152** is taking a charge. When battery **152** begins to take a charge, the voltage across battery **152** may stop increasing or level out, and the charging current (e.g., direct current **293**) may start to flow or increase at a greater rate. Thus, charger **100** may evaluate whether battery **152** is taking a charge (step **319**) by measuring the charging voltage and/or its rate of change, charging current and/or its rate of change. In other words, charger **100** or controller **270** may measure at least one of the charging voltage and the charging current, and do this instantaneously or over a period of time in order to make decisions about how to best continue charging the battery, or to end charging the battery. In one embodiment, controller

270 may increase the charging power (step **317**) incrementally, measure the voltage, current, or both (e.g., of direct current **293** for step **319**), and then modify the charging power supplied to the battery another increment (returning to step **317**). The control process may occur so rapidly as to appear smooth rather than incremental. This process (steps **317** and **319**) may be repeated until the voltage stops changing, for example. Or in another example, this process (steps **317** and **319**) may be repeated until the current reaches a predetermined limit for the identified battery pack or battery (e.g., battery **152**). The deciding parameter may be different for particular phases of the charging process, depending on the battery parameters, the state of charge, and other factors governing the charging process.

[**0091**] At first, the charging voltage may be increased, while the charging current (e.g., direct current **293**) may remain essentially zero. But at some point as the charging voltage increases (step **317**), the charging voltage exceeds the battery pack or battery (e.g., battery **152**) voltage and the charging current (e.g., direct current **293**) may start to flow and proceed to increase. At this point the charging current (e.g., direct current **293**) may start to charge the battery pack or battery (e.g., battery **152**). When the charging current (e.g., direct current **293**) starts to flow, the voltage (e.g., the voltage across battery pack or battery **152**) may level off. This may be seen as a reduction in the rate of change of the voltage as the power level continues to increase. This reduction in the rate of change of the voltage may be substantial.

[**0092**] At this point (decision step **319**), charger **100** may change or reduce the rate of increase of the charging power level (e.g., of direct current **293**), for example, to a second rate of increase (step **322**). Thus, the first rate of increase (of step **317**) may be a higher rate of increase, and the second rate of increase (step **322**) may be a lower rate of increase. Thus, method **300** may have at least a first rate of increase (of charging power level, step **317**) and a second rate of increase (of charging power level, step **322**), and the first rate of increase may occur (in time) before the second rate of increase. In addition, the first rate of increase (step **317**) may be greater (a greater rate of increase) than the second rate of increase (step **322**). The second rate of (power) increase (of step **322**) may be, for example, about half as great as the first (higher) rate of (power) increase (of step **317**).

[**0093**] In the embodiment wherein power supply **240** is a variable-frequency generator, the dependent voltage based on frequency output of power supply **240** may be increased, for example, at a second (lower) rate (of step **322**) of 5 Hz per second. Thus, the step of changing or increasing the charging power level (e.g., step **317** or **322**) may include changing or increasing a frequency relating to a voltage.

[**0094**] Reducing the rate of increase of voltage to increase the power level (decision step **319** and step **322**) may occur either when the charging voltage (e.g., measured by meter **295**) substantially stops increasing, or the charging current (e.g., direct current **293**) starts flowing. In some embodiments, controller **270** may reduce the rate of increase of the power level when either the charging voltage substantially stops increasing, or the charging current starts flowing, for example exceeding a minimum value. In other embodiments, controller **270** may reduce the rate of increase of the power level only when both the charging voltage substantially stops increasing, and the charging current starts flowing. Thus, In various embodiments, either the charging voltage or the charging current (or both) may be used to determine (step **319**) when to reduce the rate of increase of charging power. Thus, the change from the first rate of increase (e.g., step **317**) to the second rate of increase (e.g., step **322**) may be triggered (e.g., in step **319**) by at least one of: a substantial cessation of increasing of the charging voltage, and the charging current (e.g., direct current **293**) exceeding a minimum value. That minimum value may be, for example, at or near zero, or substantially less than the current lid (e.g., of step **327**).

[**0095**] In some embodiments, charger **100** may alarm or stop charging if an increase in the charging current or a decrease in the rate of increase in voltage do not occur within a particular tolerance of the characteristics of the type of battery pack or battery **152** identified (in step **310**). Similarly, in some embodiments, charger **100** may alarm or stop charging if an increase in the charging current or a decrease in the rate of increase in voltage occurs outside of a particular tolerance of the characteristics of the type of battery pack or battery **152** identified (in step **310**). Power level may be used in lieu of current or in lieu of voltage. Thus, in some embodiments, charger **100** may determine (in step **319**) whether, for example, the current? (e.g., direct current **293**) fits a defined range for the selected voltage at the specific current? or power setting.

[**0096**] It should be noted that in the embodiment illustrated in **FIG. 3**, there are two rates of increase of power (or rates of increase of frequency in embodiments wherein power supply **240** is a variable-frequency generator), namely, steps **317** and **322**. In other embodiments there may be only one rate of increase of power (or rate of increase of frequency), for example, 5 Hz per second. In still other embodiments, there may be more than two rates of increase of power (or rates of increase of frequency), or the rate may be changed gradually or be completely variable. For example, the rate of increase of power (or rate of increase of frequency) may start (e.g., at step **315** or **317**) at a higher level, and may decrease gradually, for example, as the current lid (e.g., of step **325**) is approached. Charger **100** or controller **270** may continuously monitor charging voltage, charging current, or both (e.g., of direct current **293**) and use this information to adjust the rate of increase of power, voltage or current (or rate of increase of frequency), or to reevaluate whether charger **100** is connected and operating properly and whether the type of battery identified (e.g., in step **310**) is correct.

[**0097**] Charger **100** may continue increasing the power level (step **322**) at the second or lower rate of increase, while measuring the charging voltage (decision step **325**). In some embodiments, charger **100** may increase the power level (step **322**) incrementally, then measure the charging voltage (step **325**), and repeat this process (steps **322** and **325**). When the charging voltage reaches the voltage lid (as determined in step **325**), method **300** may advance to constant voltage charging (phase **330**).

[**0098**] The voltage lid (for example, of step **325**) may be the maximum voltage at which the battery or batteries (e.g., **152**) can safely be charged at the rate they are receiving charge. The voltage lid may be, for instance, the charging

voltage of the type of battery cell, times the number of cells arranged or wired in series. The voltage lid may be stored in look-up table **272**, for example, for the particular type battery pack or battery (for example, as identified in step **310**). The voltage lid may vary with the temperature. Charger **100** or controller **270** may input the temperature of the battery pack or battery (e.g., of battery **152** via control pins in connector **126**) and use that information to adjust the voltage lid. In some embodiments, where precise battery temperature is not available, charger **100** or controller **270** may use the ambient temperature to adjust the voltage lid. Thus, the voltage lid (of step **325**) may be corrected for temperature or temperature corrected. In other words, the voltage lid (e.g., of step **325** or **335**) may be adjusted for the temperature of the battery (e.g., **152**). The voltage lid may also be corrected for the charging rate or the power level of the charge being delivered.

[**0099**] If the voltage lid has not been exceeded (e.g., in step **325**) then charger **100** may measure the charging current to determine whether a current lid has been reached or exceeded (step **327**). Thus, method **300** may include the step of increasing the charging power level (e.g., in step **322**) until at least one of a current lid (e.g., of step **327**) and a voltage lid (e.g., of step **325**) is exceeded. In the embodiment wherein power supply **240** is a variable-frequency generator, for example, method **300** may include the step of increasing the charging power level (e.g., in step **322**) and a frequency dependent voltage (e.g., of alternating current **241**, also increased in step **322**, for example) until at least one of a current lid (e.g., of step **327**) and a voltage lid (e.g., of step **325**) is exceeded (e.g., by direct current **293**). In addition, in some embodiments, the variable-frequency generator may have an alternating current output (e.g., alternating current **241**), which may be transformed with a foil-type transformer (e.g., transformer **280**).

[**0100**] In the particular embodiment illustrated, if the current lid is exceeded (e.g., in step **327**) before the voltage lid is exceeded (e.g., in step **325**), then the step of increasing the charging power level (e.g., in step **322**) occurs until a current lid is exceeded (e.g., in step **327**). It should be noted that, the current lid (e.g., of step **327**) and the voltage lid (e.g., of step **325**) may be specific points within a range, above or below which points different actions may be taken. Thus, as used herein, the word "exceeded", when referring to a current or voltage lid, shall include embodiments wherein actions are taken when the points are merely reached. In other words, as used herein, "exceeded" includes being reached.

[**0101**] The charging current (e.g., direct current **293**) may be measured with meter **295**, for example, by measuring the voltage across a shunt. The charging current and charging voltage, or voltage across the battery, may be measured by meter **295** illustrated in **FIG. 2**, and controller **270** may process these measurements and control power supply **240**. The current lid (of step **327**) may depend on the particular type of battery pack or battery (e.g., battery **152**) as determined in step **310**. Thus, the voltage lid (e.g., of step **325**) may be based on the open-circuit voltage (e.g., measured in step **308**).

[**0102**] In some embodiments, the current lid (of step **327**) may be selected based on the type of battery pack or battery (e.g., battery **152**) and may be stored in look-up table **272**. In other embodiments, (or for some types of battery packs or batteries), the current lid (of step **327**) may be the current capacity of charger **100**, for example, current in the range of about 30 amps to about 300 amps. In embodiments wherein the current lid (of step **327**) is the current capacity of the charger, the battery pack or battery (e.g., **152**) may be protected from being charged too rapidly by the voltage lid (e.g., of step **325**). Once the current lid is reached (as determined in step **327**), charger **100** may stop increasing the charging power level, or may decrease the charging power level (step **329**), for example, incrementally.

[**0103**] Charger **100** or controller **270** may repeatedly check the charging voltage (step **325**) and current (step **327**) and either increase (step **322**) or decrease (step **329**) the power level to keep the charging current (e.g., direct current **293**) substantially at the current lid. This loop (steps, **325**, **327**, and alternately **322** or **329**) provides essentially constant current charging (phase **320**). Thus, method **300** may include charging at a substantially constant current until the voltage lid (e.g., of step **325**) is exceeded. In the exemplary embodiment illustrated, during phase **320**, the power level (e.g., of power supply **240**) will gradually increase as the charging voltage increases. In the embodiment wherein power supply **240** is a variable-frequency generator, the frequency output of power supply **240** may gradually increase accordingly.

[**0104**] In the embodiment illustrated in **FIG. 3**, during constant current charging, alternating between increasing the power level (step **322**) and decreasing the power level (step **329**) causes the charging voltage and current to oscillate to some extent. This may facilitate cooling of battery **152** which may allow battery **152** to be charged more quickly, all other things being equal. But some embodiments of the present invention may not have this feature.

[**0105**] In another exemplary embodiment, once the current lid is reached, the power level of charger **100** or power supply **240** may be held constant or gradually increased until the voltage lid is reached or exceeded. In the embodiment wherein power supply **240** is a variable-frequency generator, the frequency output of power supply **240** may be held constant or gradually increase after the current lid is reached, for example.

[**0106**] While charging or continuing to charge at the same current (e.g., direct current **293**) (phase **320**), charger **100** or controller **270** may continue to measure the charging voltage (step **325**). The charging voltage will generally increase as the battery charges, and eventually the voltage lid (of step **325**) will be reached. Then, as mentioned above, method **300** begins constant voltage charging (phase **330**). In some cases, for example, for small or relatively low capacity battery packs or batteries (e.g., batteries **152**), or batteries that are already substantially charged, method **300** may never enter the phase of constant current charging (phase **320**). Rather, the voltage lid may be exceeded (step **325**) before the current lid is exceeded (step **327**).

[**0107**] Whether constant current charging (phase **320**) has occurred or not, when method **300** enters the phase of constant voltage charging (phase **330**), the charging power will be decreased (step **332**), for example, incrementally or smoothly. If the charging voltage remains above the voltage lid (e.g., in step **335**) then the charging voltage will be reduced further (repeating step **332**) until the charging

voltage does not exceed the voltage lid (in step **335**). Then charger **100** or controller **270** may monitor whether the charging current has dipped below a current threshold (step **337**). This current threshold may be stored in look-up table **272** for the particular type battery pack or battery (e.g., battery **152**, as identified in step **310**). In other words, the threshold may be selected (e.g., by controller **270**) based on the type of battery pack or battery (e.g., battery **152**) or based on the open-circuit voltage (e.g., measured in step **308**).

[**0108**] This loop or process of comparing the charging voltage with the voltage lid (step **335**) and comparing the charging current with the current threshold (step **337**) may continue, occasionally or gradually decreasing the power level (step **332**) as the battery fills and the rate of charge (e.g., direct current **293**) decreases until the charging current drops below the threshold (step **337**). Thus, method **300** may include the step of charging until a current threshold is reached (e.g., in step **337**). In addition, since the charging voltage may tend to increase as the battery is charged, and the power level may be decreased (e.g., e.g., in phase **330**, for example, in step **332**) if the voltage lid is exceeded (e.g., in step **335**), the step of charging until a current threshold is reached (e.g., in step **337**) may be at a substantially constant voltage. This substantially constant voltage (e.g., of phase **330**) may be, for example, the voltage lid (e.g., of step **335**). Thus, method **300** may include (e.g., in phase **330**) the step of charging substantially at the voltage lid.

[**0109**] The voltage, current, or power level at which charging is taking place (e.g., in steps **315** through **339**) may be indicated, for example, in real time, via an LED or screen **107**. When the charging current (e.g., direct current **293**) drops below the threshold (as determined in step **337**), charger **100** may stop charging (step **340**), may indicate that charging is complete (step **339**, e.g., via indicator lights **108**, screen **107**, or both), or both. Thus, charger **100** may be configured to enable an indication when the battery pack or battery (e.g., battery **152**) is substantially charged. And method **300** may include the step of stopping charging (step **340**) when the charging current (e.g., direct current **293**) reaches (or becomes less than) the current threshold (e.g., in step **337**). As used herein, the term "reaches", when referring to the current threshold, includes becoming less than the threshold.

[**0110**] The voltage, current or power level at which charging is taking place may be controlled in such a way that once a particular limit has been reached, it cannot be exceeded, and can only be decremented from, even as other limits are allowed to increase with the battery state of charge. In one instance, for example, power and voltage may be allowed to increase after the current limit is reached, but current may not be allowed to increase and may only decrement to a new (lower) current limit, which may only be decremented from further still until a minimum current may be reached for a particular system. In another example, power and current may be increased while the battery voltage is held substantially constant. Further, in some situations, a specific parameter may increase or decrease in a way that indicates charging may be terminated, for instance when a constant power and a decreasing voltage result in an increasing charging current to the battery.

[**0111**] Charger **100** may be used for fast or opportunity charging, in which case the current threshold (e.g., of step **337**) may be more than what would correspond to a full battery charge for the particular type battery, or more than an optimal charge where time is not a consideration. In some embodiments, fast or opportunity charging may take place for a particular amount of time or energy, for example, entered by the user into key pad **104**. In some embodiments, when a certain amount of charging has been completed or the charge of battery **152** reaches a certain level, charger **100** may indicate that charging is complete (step **339**) or substantially complete. But charger **100** may continue to charge battery **152** until a current threshold is reached unless the user disconnects or stops (step **340**) charger **100**. For instance, charger **100** may indicate that charging is complete at one current threshold (step **337**) and stop charging at a lower current threshold (similar to step **337**). This feature may facilitate minimizing the charging time if the user is waiting for the charge to be completed, but maximizing the amount of charging that takes place if the user is not ready to use, for example, vehicle **150**. There may also be benefits to battery **152** of giving it a deeper charge periodically. The user may be given the option of whether to select this feature, for example, so that the user can decline this feature if the amount of money the user wants to pay for the charge is the limiting factor rather than time.

[**0112**] When charger **100** indicates that charging is complete (step **339**), or the user stops or disconnects charger **100**, charger **100** may provide information to the user, such as the amount of charge that was made, the price charged, etc., for example, via screen **107**. A receipt may be printed, for example, via printer **111**.

[**0113**] While charging is taking place (e.g., steps **313** through **339**), controller **270** or a signal generator may provide a signal to card reader **110** or network **275** indicating the amount of energy used or the price charged for the charging energy provided thus far. As an example, up to 1000 pulses may be provided per unit of energy.

[**0114**] Benefits, other advantages, and solutions to problems have been described above with regard to specific embodiments. However, the benefits, advantages, solutions to problems, and any element(s) that may cause any benefit, advantage, or solution to occur or become more pronounced are not to be construed as critical, required, or essential features or elements of any or all the claims. As used in this document, the terms "comprises", "comprising", or any other variation thereof, are intended to cover a non-exclusive inclusion, such that a process, method, article, or apparatus that comprises a list of elements does not include only those elements but may include other elements not expressly listed or inherent to such process, method, article, or apparatus. Further, no element described in this document is required for the practice of the invention unless expressly described as "essential" or "critical".

[**0115**] In addition, modifications may be made to the disclosed embodiments without departing from the scope of the invention. The scope of the invention is therefore not limited to the disclosed embodiments but is defined by the appended claims. In other words, other variations and modifications of the present invention will be apparent to those of ordinary skill in the art, and it is the intent of the appended claims that such variations and modifications be covered. The particular values and configurations discussed above can be varied, are cited to illustrate particular embodiments

of the present invention, and are not intended to limit the scope of the invention. It is contemplated that the use of the present invention can involve components having different characteristics as long as the elements of at least one of the claims below, or the equivalents thereof, are included.

What is claimed is:

1. A battery charger comprising:

a direct current (DC) power supply;

a variable alternating-current power supply configured to receive direct current from said DC power supply and output a first alternating current of a controllable power level superimposed upon at least one of a higher frequency switched frequency and a higher frequency carrier frequency; and

a controller configured to control said variable alternating-current power supply, said controller including control of at least said power level of said first alternating current.

2. The battery charger of claim 1, further comprising:

a first transformer configured to receive said direct current from said DC power supply and change a voltage of said DC power supply, and transmit said DC power supply to said variable alternating-current power supply.

3. The battery charger of claim 2, wherein said transformer is at least one of a wire wound transformer and a foil transformer.

4. The battery charger of claim 2, wherein said transformer is configured to increase said voltage, and decrease amperage of said DC power supply.

5. The battery charger of claim 2, wherein said transformer is configured to change said voltage to a voltage in the range of about 30 volts to about 700 volts, and change amperage of said DC power supply to a range of about 30 amps to about 300 amps.

6. The battery charger of claim 1, wherein said controller is one of a digital controller, an analog controller, and a digital/analog controller.

7. The battery charger of claim 2, further comprising:

a second transformer configured to supply power to said controller.

8. The battery charger of claim 1, further comprising:

a filter configured to filter said direct-current output, said filter comprising at least one of an inductor and a capacitor, wherein said filter achieves optimization utilizing a carrier of said switched frequency and an output frequency of said power supply.

9. The battery charger of claim 1, wherein said controller is configured to measure the voltage of said direct-current output.

10. The battery charger of claim 1, wherein said charger is configured to communicate with a diagnostic device configured to facilitate maintenance or diagnosis of faults.

11. The battery charger of claim 1, wherein said first transformer is configured so that said second alternating current has a lower voltage and a higher amperage than said first alternating current; and said variable-frequency generator being configured so that said first alternating current has a substantially higher frequency than that of said input electrical power.

12. A battery charger, comprising:

an alternating-current (AC) power supply;

a device configured to receive a first alternating current from said AC power supply and convert said first alternating current to a direct-current (DC) output;

a variable alternating-current power supply configured to receive said DC output from said device and output a second alternating current of a controllable power level superimposed upon at least one of a higher frequency switched frequency and a higher frequency carrier frequency; and

a controller configured to control said variable alternating-current power supply, said controller including control of said power level of said second alternating current.

13. The battery charger of claim 12, further comprising:

a first transformer configured to receive said first alternating current and change a voltage of said first alternating current, and transmit said first alternating current to said device.

14. The battery charger of claim 13, wherein said first transformer is at least one of a wire wound transformer and a foil transformer.

15. The battery charger of claim 13, wherein said first transformer is configured to at least one of modify and change said voltage, and at least one of modify and change amperage of said first alternating current.

16. The battery charger of claim 13, wherein said first transformer is configured to change said voltage to a voltage in the range of about 30 volts to about 700 volts, and increase amperage of said first alternating current to a current in the range of about 30 amps to about 300 amps.

17. The battery charger of claim 13, further comprising:

a second transformer configured to supply power to said controller.

18. The battery charger of claim 12, wherein said controller is one of a digital controller, an analog controller, and a digital/analog controller.

19. The battery charger of claim 12, further comprising:

a filter configured to filter said direct-current output, said filter comprising at least one of an inductor and a capacitor, wherein said filter achieves optimization utilizing a carrier of said switched frequency and an output frequency of said power supply.

20. The battery charger of claim 12, wherein said controller is configured to measure the voltage of said direct-current output.

21. The battery charger of claim 12, wherein the charger is configured to communicate with a diagnostic device configured to facilitate maintenance or diagnosis of faults.

22. The battery charger of claim 12, wherein said first transformer is configured so that said second alternating current has a lower voltage and a higher amperage than said first alternating current; and said variable-frequency generator being configured so that said first alternating current has a substantially higher frequency than that of said input electrical power.

23. An electric-vehicle charger comprising:

a variable-frequency generator configured to input electrical power and output a first alternating current of a

controllable frequency superimposed upon at least one of a higher frequency switched frequency and a higher frequency carrier frequency;

a controller configured to control said variable-frequency generator, the controller including control of the frequency of said first alternating current;

a first transformer configured to change the voltage of said first alternating current to a second alternating current;

a device configured to convert said second alternating current to a direct-current output; and

a connector configured to connect to an electric vehicle and deliver said direct-current output to the vehicle.

24. The electric-vehicle charger of claim 23, wherein said first transformer is configured to receive said first alternating current, change a voltage of said first alternating current to form said second alternating current, and transmit said second alternating current to said device.

25. The electric-vehicle charger of claim 23, wherein said first transformer is at least one of a wire wound transformer and a foil transformer.

26. The electric-vehicle charger of claim 23, said charger being configured to charge at a plurality of direct-current output voltages, the charger being configured to automatically determine the voltage of the electric vehicle and supply the correct voltage and current.

27. The electric-vehicle charger of claim 23, wherein the charger is configured to charge in the range of about 30 amps to about 300 amps.

28. The electric-vehicle charger of claim 23, wherein the charger is configured to charge in the range of about 12 volts to about 700 volts.

29. The electric-vehicle charger of claim 23, further comprising:

a second transformer configured to supply power to said controller.

30. The electric-vehicle charger of claim 23, further comprising:

a card reader configured to enable the charger.

31. The electric-vehicle charger of claim 23, further comprising:

a filter configured to filter said direct-current output, said filter comprising at least one of an inductor and a capacitor, wherein said filter achieves optimization utilizing a carrier of said switched frequency and an output frequency of said power supply.

32. The electric-vehicle charger of claim 23, wherein said controller is configured to measure the voltage of said direct-current output.

33. The electric-vehicle charger of claim 23, wherein said controller is configured to enable an indication when the electric vehicle is substantially charged.

34. The electric-vehicle charger of claim 23, wherein the charger is configured to communicate with a diagnostic device configured to facilitate maintenance or diagnosis of faults.

35. The electric-vehicle charger of claim 23, wherein said first transformer is configured so that said second alternating current has a lower voltage and a higher amperage than said first alternating current; and

said variable-frequency generator being configured so that said first alternating current has a substantially higher frequency than that of said input electrical power.

* * * * *