Pergamon

Int. J. Hydrogen Energy Vol. 21, No. 6, pp. 497–505, 1996
Copyright © 1996 International Association for Hydrogen Energy
Elsevier Science Ltd
Printed in Great Britain. All rights reserved
0360–3199/96 $15.00 + 0.00

0360–3199(95)00102–6

DEVELOPMENT OF A HYBRID FUEL CELL/BATTERY POWERED ELECTRIC VEHICLE

M. NADAL and F. BARBIR

Energy Partners, Inc., 1501 Northpoint Parkway, Suite 102, West Palm Beach, FL 33407, U.S.A.

(*Received for publication* 11 *September* 1995)

Abstract—This paper describes the design and performance of a prototype zero emission electric vehicle, powered primarily by air-breathing proton exchange membrane (PEM) fuel cells using gaseous hydrogen as fuel. The fuel cell system is composed of the fuel cell stacks, hydrogen tank, air compressor, solenoid valves, pressure regulators, water pump, water tank, heat exchangers, sensors, programmable controller, and voltage regulator. The battery system provides power to the vehicle during periods of peak power demand such as vehicle acceleration or traveling at a high constant speed. The batteries also provide the power to initiate fuel cell start-up. The vehicle was designed, assembled, tested, and has traveled several hundred kilometers solely on fuel cell power with satisfactory performance. It has successfully proved the concept of a fuel cell powered zero emission vehicle. Further enhancements will improve the performance in terms of increased speed, acceleration, fuel efficiency, range and reliability. Copyright © 1996 International Association for Hydrogen Energy

INTRODUCTION

Automobiles are one of the major sources of air pollution in urban areas. As air pollution in heavily populated areas becomes unbearable, the search for cleaner alternatives emerges as an imperative. The goals of this project were to design, develop and demonstrate a zero emission prototype vehicle powered by proton exchange membrane (PEM) fuel cells, referred to as the 'Green Car'. PEM fuel cells are very efficient, compact and low weight, operate at almost ambient temperature, and use hydrogen — the cleanest fuel. As such, PEM fuel cells offer promise as the best future replacement for internal combustion engines in transportation applications.

Although the fuel cell was invented more than 150 years ago, it has not left the research laboratories yet, except for special applications such as the space program. Only recently, mainly because of environmental concerns, has fuel cell technology in general, and PEM fuel cells in particular, come closer to commercialization. The technology exists, although it still needs some improvements, but it needs market and infrastructure development. The ultimate goal of this project is to bring fuel cell technology out of the laboratory into the marketplace for use in transportation as well as in distributed stationary power generation.

The project included development and manufacture of the PEM fuel cell system and its integration into an existing lightweight vehicle, referred to as the 'Green Car', followed by testing of the vehicle's performance.

GREEN CAR DESIGN

The Green Car was designed to incorporate a lightweight body with low aerodynamic drag and small frontal area (Fig. 1). It is a hybrid electric vehicle powered primarily by PEM fuel cells. Figure 2 illustrates the functional block diagram of the hybrid propulsion system showing all of the major components, which include fuel cell stacks, fuel cell support equipment, fuel cell voltage regulator, electric drive motor, battery bank, and microprocessor-based programmable controller (MPC). The motor is a highly efficient DC brushless motor capable of providing regenerative braking that can be used to charge the auxiliary battery bank. The vehicle operates primarily on fuel cell power and draws power from the batteries only for peak power requirements, such as acceleration. The fuel cell power system works in parallel with a battery bank. The fuel cells use hydrogen as the fuel and ambient air as the oxidant. The support components of the fuel cells consist of the high pressure gaseous hydrogen storage tank, air compressor, solenoid valves, pressure regulators, sensors, water pump, water tank, heat exchangers and piping system. The voltage regulator conditions the voltage output of the fuel cell stacks. It provides a constant voltage output independent of the large fuel cell voltage swing. Any excess power from the fuel cell stacks can be used to charge the batteries. Two DC/DC converters provide 12 V DC to power the vehicle accessories, instrumentation, and fuel cell support equipment. A microprocessor-based pro-

IPR2026-00382
Tesla EX1015 Page 1

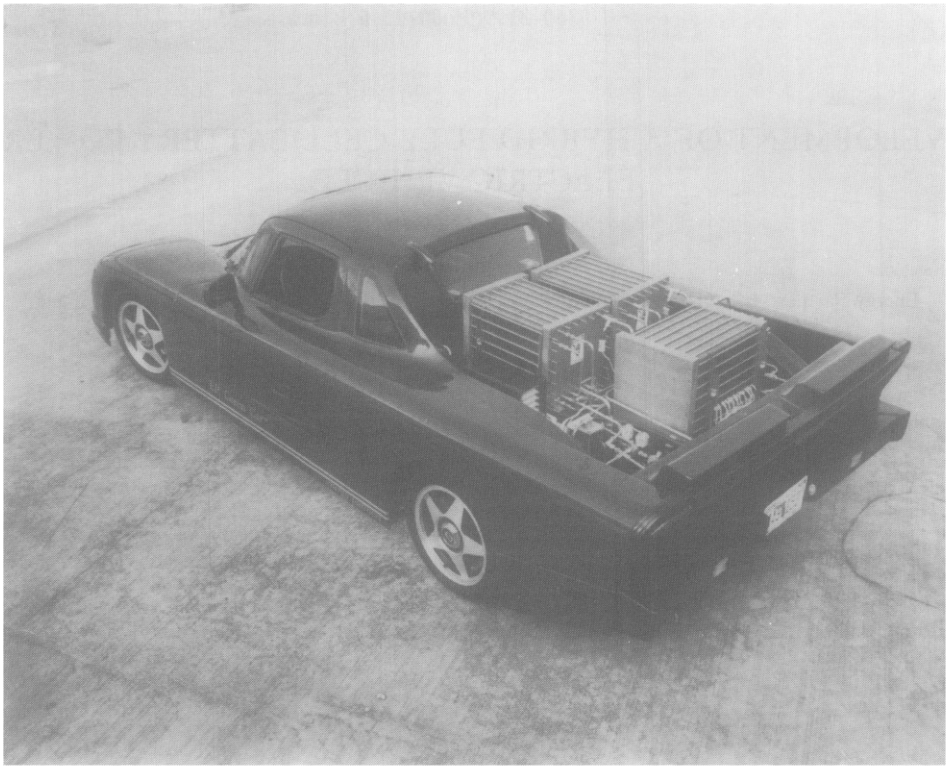

Fig. 1. Energy Partners' Green Car.

grammable controller starts, monitors, and shuts down the fuel cell system. It monitors all system parameters, which include temperatures, pressures, voltages, currents, and flow rates.

Vehicle body

The vehicle body was obtained from Consulier Automotive (West Palm Beach, Florida, U.S.A.). The high-strength, low-weight, monocoque construction is made of foam core polycarbonate advanced composite material. The material is impervious to corrosion, and will last indefinitely. Advanced composite materials are fully recyclable and can actually be ground up and reused. The weight of the body used for the Green Car is approximately 84 kg.

Electric motor and motor controller system

The electric motor and controller that were selected for the Green Car were designed and built by Unique Mobility, Inc. The 26 kW motor is an air-cooled, DC brushless type motor and can deliver a constant torque of 73 Nm from 0 to 3300 rpm. The maximum speed is 4000 rpm, and maximum efficiency is 95%. This motor was selected because of its light weight (approximately 18 kg) and compactness. The motor controller weighs another 18 kg, and is required for both commutation and control functions. The controller is capable of driving the motor both in the forward and reverse directions. Regenerative braking is also provided by the controller and the level of regenerative braking can be set by an external signal to the controller. The motor speed is controlled by the accelerator pedal that provides an analog voltage (-10 to $+10$ V full reverse to full forward). Hall effect sensors in the motor are used for determining the timing information needed for motor commutation. These signals are processed by the controller and compared with the desired speed. In the event that the controller or motor overheats, the controller will automatically limit current by itself.

Transmission system

A five speed transmission was used in the design because of the motor's inability to operate at speeds in excess of 4000 rpm without overheating. The transmission is a fully synchronized five speed manual transaxle with combined gear reduction, ratio selection and differential functions in one unit housed in a die-cast aluminum case. A reversing gear, although available, is not required since the electric drive motor is reversible. The motor is mounted directly on the transmission with a flexible coupling installed on the input shaft.

IPR2026-00382
Tesla EX1015 Page 2

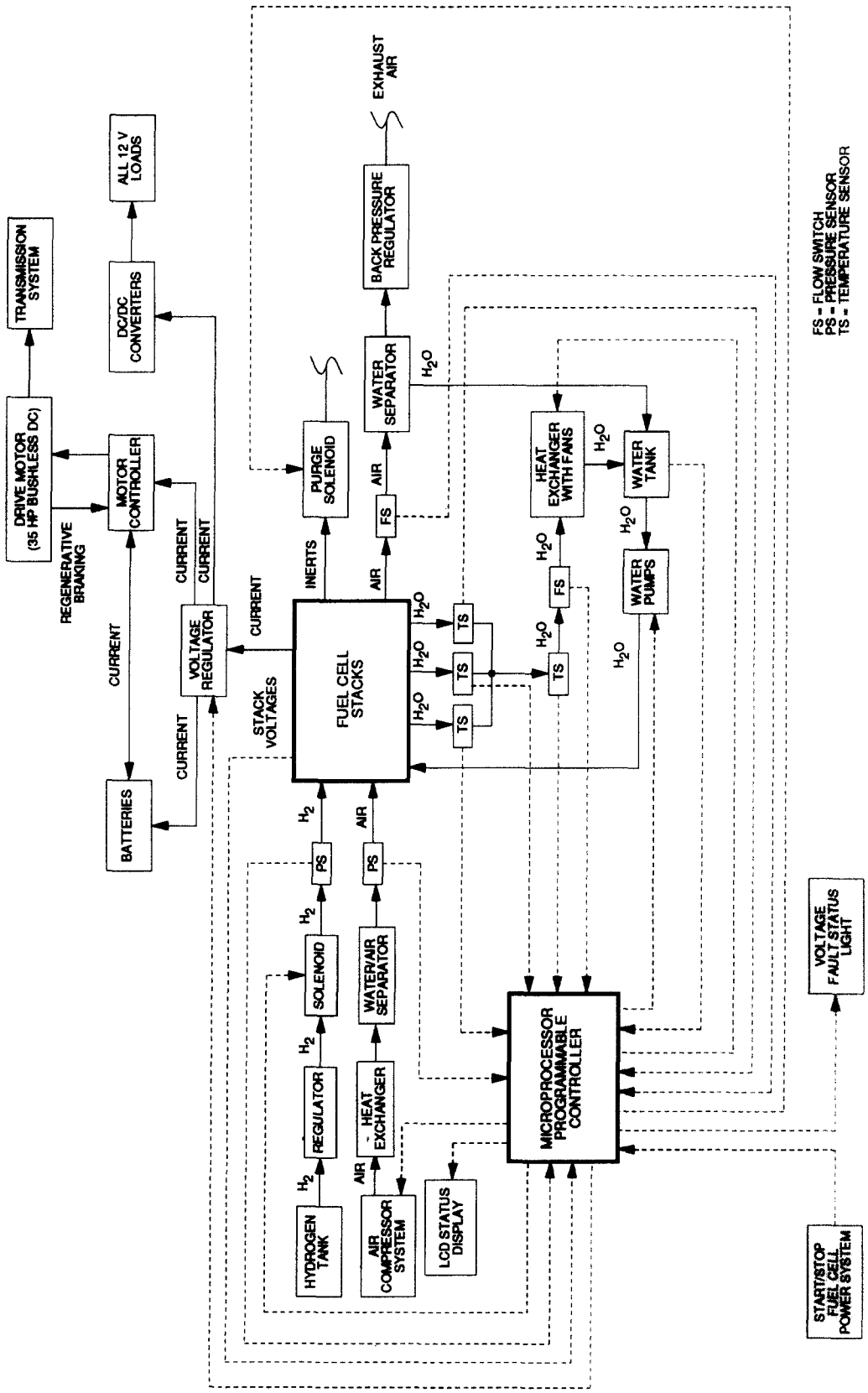

Fig. 2. Hybrid propulsion system functional block diagram.

Battery system

The battery system consists of 10 12 V deep discharge batteries manufactured by Sonnenschein (Prevailer DF180) which provide both start-up power to the fuel cell system and auxiliary power for acceleration. The batteries are lead acid, sealed, maintenance-free, and gelled electrolyte type. Each battery weighs 30 kg, has a volume of 13.6 l, and according to the manufacturer specifications, can deliver 25 A for 200 min (1 kWh energy) when totally charged. The batteries are charged by the voltage regulator and by the regenerative braking provided by the motor controller.

Fuel cell power system

The Green Car fuel cell power system consists of the fuel cell stacks and their supporting subsystems, namely:

- Fuel storage and management subsystem,
- Oxidant management subsystem,
- Water management subsystem,
- Voltage regulation subsystem,
- Control & monitoring subsystem.

The fuel cell stacks are connected electrically in series and mechanically in parallel. Figure 2, the hybrid propulsion system functional block diagram, shows how the fuel cell power system is integrated into the electric vehicle.

Fuel cell stacks

The three PEM fuel cell stacks used for this project were designed and manufactured by Energy Partners, Inc. The PEM fuel cell uses a solid, fixed electrolyte and exhibits low temperature and pressure operation, rapid start-up, and rapid load response.

A fuel cell stack is composed of a series of cells separated by bi-polar current collector plates. The collector plates in the Green Car stacks have an active area of 780 cm^2 and are made of graphite with a polymer binder, which produces a corrosion resistant material. The collector plates contain internal manifolds and provide a proper flow field for fuel and oxidant, as well as providing pathways for water removal. Each cell consists of gas chambers and electrodes separated by Nafion™ 115, a proton conducting polymer membrane. Electrodes are made of water repellent carbon fiber paper with a platinum based catalyst layer deposited on one side.

The fuel cell stack assembly hardware includes the fluid and compression endplates, which hold the stack together by sandwiching the properly ordered cells and components with the use of tie-rods, nuts, and washers. The bus plates are made of copper and are designed so that wire cables can be attached easily.

Each of the stacks in the Green Car contains 60 cells for a total of 180 cells. Originally, the fuel cell system was designed to consist of two stacks with 86 cells each. However, difficulties were encountered in building a stack with more than 60 cells, and the decision was made to build and install three 60 cell stacks. Cooling of the stack is provided by water flowing through specially designed cells strategically distributed through the active section of the stack. The stack also contains an internal humidification section that provides the proper conditions for the electrochemical reaction and prevents dehydration of the membrane. Table 1 lists the Green Car fuel cell stack specifications*.

Table 1. Fuel cell stack specifications

Manufacturer	Energy Partners
Type	PEM
Membrane	Nafion™ 115
Collector material	Graphite with binder
Reactants	Hydrogen/air
Rated power output	21 kW
Voltage @ rated output	126 V
Current density @ rated output	215 mA cm^{-2}
Cell voltage @ rated output	0.7 V
Stack efficiency @ rated output	54% (LHV)
Average operating temperature	52°C
Reactant pressure	239 kPa
Cell active area	780 cm^2
Number of cells	60 (per stack)
Number of stacks	3
Stack dimensions	35.56 × 35.56 × 61 cm
Stack weight	104 kg each (312 kg total)

Fuel storage and management subsystem

The fuel cells require pure hydrogen (at least 99.9% purity). The hydrogen storage system chosen for the Green Car is compressed gaseous hydrogen at a moderate storage pressure of 20.8 MPa in a composite pressure vessel. This method was chosen because it is simple in design, the technology is well advanced, and when combined with a suitable pressure regulating device provides a passive, simple load following system. The compressed gas fuel storage system is designed to hold approximately 1 kg of pure hydrogen. The vessel is made of an inner 6061-T6 aluminum liner with hemispherical ends, wrapped with a composite spiral wound E-glass/epoxy resin. This design results in a lightweight structurally sound cylinder. The cylinder is designed to the latest applicable DOT specifications for compressed gas fuel storage for automotive applications.

The fuel management subsystem receives hydrogen from the pressure vessel and regulates the pressure down to system pressure of 239 kPa. The pre-regulated pressure is measured and supplied to the MPC to provide information on remaining fuel stores; the post regulated pressure signal is supplied to the MPC to ensure proper system pressure. Hydrogen is directly fed to the stacks in dead-ended mode, with intermittent purging for removal of inerts (a small amount of hydrogen is lost during purging).

* These fuel cell stacks were the first generation prototypes built by Energy Partners, Inc. Today's fuel cell stacks have 2.5 times higher power density.

IPR2026-00382
Tesla EX1015 Page 4

Oxidant management subsystem

Air is used as the oxidant in the Green Car. The ambient air is drawn through a particulate filter by a compressor and raised in pressure to approximately 205 kPa. A rotary vane type compressor was selected, rated at 1 kg min^{-1} and 39 kPa. Power requirement at rated conditions is 3.5 kW. The air flow rate is kept constant at a level that supports the electrochemical reaction at rated power, a stoichiometric ratio of about 1.3. The stoichiometric ratio at lower power levels is therefore always higher than 1.3. The pressure and flow rate values for the air are supplied to the MPC by suitable sensors. The air is then directed through the heat exchanger and water/air separator and into the stacks. Oxygen in the air stream is used to support the fuel cell reaction while the rest of the stream carries the product water from the stack.

Water management subsystem

Water is used for cooling the fuel cell stacks and for humidification of the reactant gases within the stack. Water is drawn from a reservoir by a pump and directed through a particulate filter and into the fuel cell. The water moves through the dedicated cooling passages within the stack where it removes the waste heat. After flowing through the cooling passages, the cooling water moves through the humidification section of the stack where hydrated membranes humidify the reactant gas streams. The remainder of the cooling water exits the stack where its temperature and flow rate are measured. Depending on the temperature of the exiting water, a thermal control valve directs the water either through a suitable heat exchanger to release the heat or directly back to the water reservoir.

Fuel cell voltage regulator system

The purpose of the fuel cell voltage regulator is to provide a constant voltage output to the drive train from the fuel cell stack by conditioning the large dynamic voltage range of the fuel cell. Under no-load conditions, the fuel cell voltage can be as high as 180 V, and under full load conditions the voltage can drop below 120 V. The regulator is adjustable in the range of 110–130 V DC and can be set at a point slightly above the battery nominal voltage to maintain the batteries in a float charge condition without overcharging them. This satisfies the requirement of low power demand being supplied only by the fuel cell to the limit of the regulator output. Thus, the primary power of the vehicle is drawn from the fuel cell stacks. Any excess current from the fuel cell is used to charge the battery bank. The capability for adjusting regulator output voltage is important because it limits the amount of maximum charge that the fuel cell stacks can deliver to the batteries. The efficiency of the voltage regulator is about 95%.

Since the regulator is connected between the fuel cell and the battery bank, and the battery bank is directly connected to the motor drive system, the absence of fuel cell power will not interfere with the operation of the vehicle on battery power alone. Also, there is no possibility of reverse current flow from the battery bank or the drive motor (in regenerative braking mode) to the fuel cell through the regulator. The regulator has internal circuitry to prevent operation at too low an input voltage and can be enabled or disabled by an external signal. In the event of a system shutdown by the controller, this last feature allows the load to be disconnected from the fuel cell.

Microprocessor-based programmable controller

The microprocessor-based programmable controller (MPC) that is installed in the Green Car is capable of monitoring the sensor inputs for specific limit conditions (temperatures, pressures, flows and water level) and taking appropriate action in the event of a fuel cell malfunction. An additional dedicated analog multiplexer with 180 differential channels monitors the individual fuel cell voltages from electrical wires connected to the graphite collector plates. The MPC also provides digital outputs for the control of external devices, such as pumps and solenoids, and a display output capable of interfacing with a remote LCD display located on the vehicle dashboard. The MPC displays the fuel cell system status information on the instrument panel. In the event of a shutdown, the MPC stores the current system parameters and these can be read directly from the LCD display or downloaded to any IBM compatible computer through the RS232 communication port on the MPC.

The microprocessor is an Intel 8052H-BASIC chip operating at 12 MHz. The instruction set to implement the control logic is stored in an EPROM, where any subsequent changes to the control strategy can be made easily. A 'watchdog' timer circuit is employed to prevent any uncontrolled operation in the event of a controller failure. All programming was done in BASIC and in assembly language. However, the fixed hardware dependent drivers were written in assembly language for optimum speed and minimum memory use.

The capability to monitor individual cell voltages is one of the most important functions of the MPC. The monitoring of total stack voltage alone does not provide sufficient information to detect a malfunction of an individual cell within the stack. A cell with a low voltage reading is an indication of a potential hazardous condition, such as a gas leak in that cell, a perforated membrane, or a reversal in cell potential. For air operation, the individual cell voltages are usually between 0.5 and 1.0 V. A shutdown is performed if any cell voltage is below 0.4 V or if the voltage difference between two adjacent cells is greater than 0.2 V. The differential voltage test is important because a defective or erratic cell can be detected before the fuel cell is subjected to a large load.

Instrumentation

The instrument panels on the vehicle dashboard and center console contain the digital meter displays, status and warning indicator lights, and switches for the driver to start and monitor the fuel cell. Meter displays include fuel cell amps, volts, and temperature; battery amps and

IPR2026-00382
Tesla EX1015 Page 5

volts; motor amps, temperature, and rpm; inlet air pressure; and hydrogen pressure. An LCD display with two rows of 20 characters located on the front dashboard provides the driver with status information on fuel cell performance. In the event of a fail-safe shutdown, the display will output the sensor reading that caused the shutdown. The center console contains status and warning lights for the stacks and fuel cell voltage regulator.

GREEN CAR PERFORMANCE

After all the components were installed in the Green Car a series of tests was conducted in order to determine the performance of the Green Car. First, the performance of each component and subsystem was tested independently. After necessary modifications, driving tests were conducted. The performance of the Green Car is described below, and summarized in Table 2.

Table 2. Green Car performance

Parameter	Performance
Average cruising speed	48 km h^{-1}
Electric power required for cruising speed	10 kW
Vehicle maximum speed	96 km h^{-1}
Acceleration 0–48 km h^{-1}	10 sec
Fuel consumption at cruising speed	12.5 g km^{-1}
Vehicle range at constant speed	110 km
Vehicle range for city driving cycle	96 km
Refueling time*	5–10 min
Start-up/shut-down time	15 s/<1 s
Emissions (gaseous)	11% O_2, 84% N_2, and 5% H_2O
Emissions (liquid)	H_2O: 0.093 l km^{-1}
Noise	85 dB at 1 m
Safety	no accidents or any hazardous situations

* This is not a vehicle feature, but rather a function of available fuel pressure and refueling equipment.

Vehicle speed and acceleration

Only limited driving tests have been performed due to lack of availability of a suitable test track. The car has only been driven on the parking lot around the Energy Partners, Inc. facilities. The Green Car has successfully completed several hundred kilometers solely on fuel cell power. Average driving speed was about 48 km h^{-1}. Maximum speed, however, is determined by the maximum power of the main propulsion motor (26 kW), vehicle weight, drag and rolling resistance. A computer program has been developed to predict the Green Car performance based on these constraints. Figure 3 shows vehicle speed as a function of required power from the fuel cell system to the electric motor and auxiliary (hotel) loads (4.5 kW). The compressor consumes 3.5 kW, and the remaining components (water pumps, heat exchanger fans, sensors, solenoid fans, lights, accessories, etc.), consume a maximum of 1 kW. This last figure is not constant since the MPC cycles the heat exchanger fans as a function of temperature, and the lights and accessories are not used continuously. For 26 kW the maximum attainable speed is 96 km h^{-1}. During the test drive it was not possible to develop maximum speed, due to the limitations of the test track. According to Fig. 3, the fuel cells can provide power for constant speeds of up to 74 km h^{-1}, which means that excess power has to be supplied by the battery bank. The battery bank starts to supply electric power as soon as the fuel cell voltage regulator output drops below the battery nominal voltage (120 V).

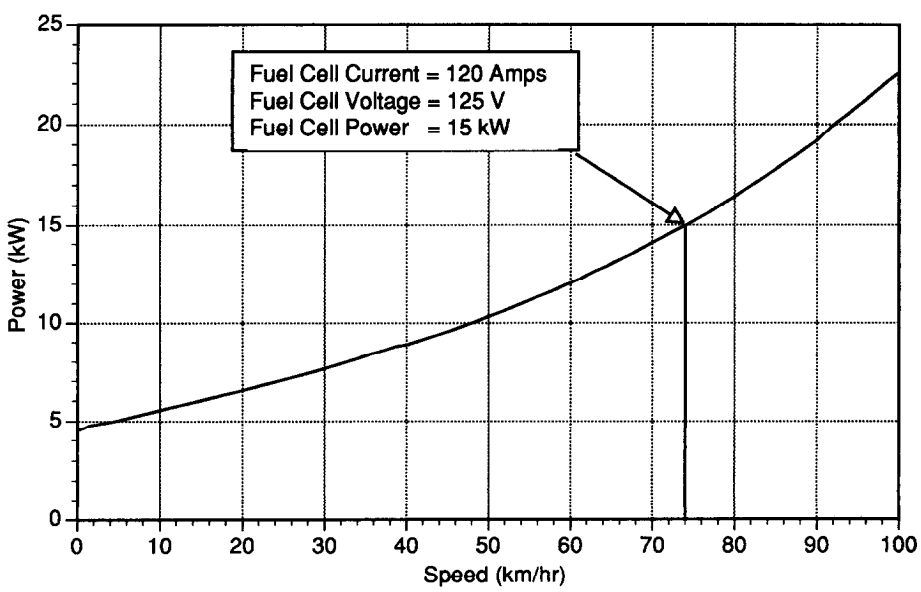

Fig. 3. Fuel cell power requirement for the Green Car traveling at constant speed.

Similarly, the acceleration performance is also determined by the main propulsion motor's capabilities. The Green Car needs approximately 10 s to accelerate from 0 to 48 km h^{-1}. Acceleration needs more power than cruising at constant speed. Again, the fuel cell system is capable of providing up to 15 kW, and the remaining power required for acceleration has to be supplied by the battery bank.

Fuel consumption and range

Fuel consumption in the fuel cell stacks (in g h^{-1}) is a function of current, according to the following equation, originally derived from Faraday's Law:

$$FC = K(I + I_d)N,$$

where I = current (A); I_d = current losses due to diffusion of hydrogen and oxygen through the membrane; $I_d = 6.5$ A (calculated from Faraday's Law based on experimentally determined diffusion rates); N = number of cells = 180; K = constant = 0.04 g A^{-1} h^{-1}.

Approximately 10 kW are needed for a constant cruising speed of 48 km h^{-1} on only fuel cell power (assuming that the batteries are fully charged, i.e. power from the fuel cells is used only to run the main electric motor and hotel load). The fuel cell stacks generate 10 kW at 77 A and 130 V. Therefore, the calculated fuel consumption is 0.6 kg h^{-1}. Specific fuel consumption per km traveled at a constant speed of 48 km h^{-1} is 12.5 g km^{-1}. In energy terms this corresponds to approximately 4.2 l per 100 km for a gasoline powered vehicle. Since the amount of hydrogen stored on-board is 1 kg, the maximum vehicle range at a constant 48 km h^{-1} speed is 80 km if the vehicle runs solely on fuel cell power. In addition, if the hydrogen fuel ran out, the battery bank has a practical storage capacity of 35 Ah, which is enough for at least an additional 30 km, and makes the total vehicle range of 110 k for a constant speed of 48 km h^{-1}. For city driving, the predicted range obtained from the computer model is about 96 km.

Other performance characteristics

Responsivity. PEM fuel cells have demonstrated very fast response to load changes, even at cold start-up. The start-up procedure takes about 15 s, measured from the moment the power switch is on until the fuel cell system is ready to supply power. This time is an arbitrary value programmed into the controller, that gives the controller time to check all the operating parameters. Regular shut-down takes less than 1 s, but the heat exchanger fans may continue to run until the cooling water temperature drops below a certain pre-set value (45 °C). Note that the batteries provide auxiliary power since the fuel cell is not capable of providing full power to the motor (rated at 26 kW) during acceleration or at high constant speeds.

Emissions. The Green Car is truly a zero emission vehicle. The exhaust is actually depleted air from the fuel cell stacks, which also contains the product water from the electrochemical reaction. Water is released both in liquid form (about 0.09 l km^{-1}) and as water vapor (100% saturated exhaust gas). Also, since hydrogen is dead-ended, intermittent purging releases a small amount of hydrogen into the air. There are no pollutants of any kind present, whatsoever.

Noise. Although an electric vehicle is supposed to be very quiet, the Green Car generates an unexpectedly loud 'buzz'. The moving parts in the vehicle include an electric motor with integral cooling, air compressor, compressor electric motor and cooling blower, water pump and heat exchanger fans. By far, the 'noisiest' component is the rotary vane type air compressor, which generates a noise level of about 85 dB at 1 m distance.

Safety and reliability. Safety of hydrogen powered vehicles is usually a matter of concern. However, during the assembly and testing of the Green Car no accidents or any hazardous or potentially hazardous situations were experienced. Regular leak checks are required for all hydrogen piping and fittings, including the fuel cell stacks.

The fuel cell is monitored and controlled by a programmable controller (MPC), which automatically performs a shut-down whenever it detects a parameter out of a prescribed range. During the test drives, intermittent shut-offs were experienced. In case of a shut-down, the vehicle continues to operate on battery power. The three main causes for these shut-downs were overheating of the compressor electric motor, fuel cell problems indicated by low cell voltage, and false-alarms caused by inaccurate voltage readings in the MPC. These causes were constantly corrected, and the time between shut-downs has dramatically increased. Although there is no hydrogen detector on board, a stack leak would be dected by a low cell voltage reading or by a large differential voltage between two adjacent cells.

FACTORS AFFECTING PERFORMANCE

Overall performance was affected either by the component suppliers not being able to meet Energy Partners' specifications and/or by the fuel cell stacks not meeting the design goals when integrated into the vehicle. The major issues concerning performance are discussed below.

Drive motor/controller

The limitations of the motor/controller system are the low power level of 26 kW (originally a 50 kW motor was designed), and the inability to operate at speeds in excess of 4000 rpm without overheating the motor. Because of this limitation, a five speed transmission was used. However, since this motor was purchased (July 1991), Unique Mobility and other motor manufactures have developed lightweight electric vehicle motors with power

IPR2026-00382
Tesla EX1015 Page 7

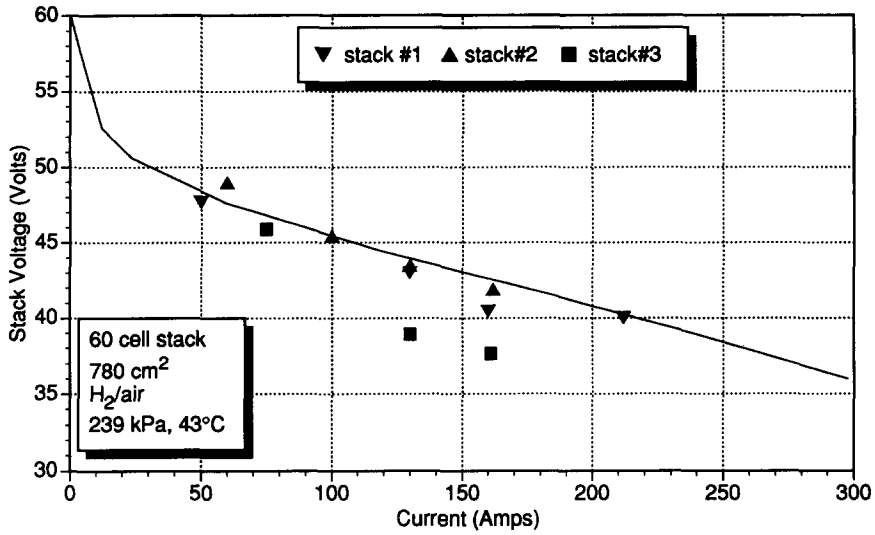

Fig. 4. Energy Partners' Green Car fuel cells performance (solid line = performance goal, markers = actual test data).

ratings over 60 kW and speeds over 7500 rpm. Vehicle performance, in terms of maximum speed and acceleration, would dramatically change with a more powerful motor. The goal to eliminate the five speed transmission in favor of directly matching the motor to the differential is possible with the new generation motors.

Air compressor

The compressor was selected to deliver 1 kg min^{-1} at 239 kPa (which corresponds to a stoichiometric ratio of 1.3 at the 20 kW design point). Power required for the compressor is 3.5 kW (the efficiency of the selected compressor is therefore less than 50%). However, during the tests, the air compressor motor constantly overheated, and it was necessary to reduce power requirements below 3 kW. This was possible by lowering the air compressor motor's rpm setpoint, which in turn limited the output pressure to 184–198 kPa and air flow to 0.8 kg min^{-1}. The performance of the fuel cell stacks was affected by this change.

Fuel cell stacks

Manufacturing of the fuel cell stacks is still in an experimental stage, which explains the differences in performance between the three 60-cell stacks installed in the Green Car. Figure 4 shows the actual performance profiles of the three Green Car stacks under air operation obtained in the test stand. The solid line was generated from a computer model and shows the performance goal. One of the stacks was able to deliver 212 A at 40 V, but the maximum attainable current from each of the other two stacks was only 160 A. Since the stacks are connected in series, the stack with the lowest current rating set the system performance. Referring to Fig. 4, at 160 A combined stack voltage is approximately 120 V, which implies a total power output of 19.2 kW. Although this is near the design goal of 21 kW, this performance was not achieved after installing the stacks in the Green Car, because the Green Car system lacks the capability of maintaining and controlling ideal operating conditions, such as temperature, pressure and flow, as compared with the test stand. The maximum power output of the Green Car fuel cell power system that has been achieved is approximately 15 kW (120 A at 125 V). The performance of the entire stack is usually decreased by a few cells that experience water management problems. Since the stacks performance is monitored and controlled by an automatic programmable controller (MPC), low voltage in only one cell creates a shut-down of the entire fuel cell system, although the remaining 179 cells are capable of delivering much more power.

Microprocessor-based programmable controller

The MPC performs three basic functions:

- start-up of the fuel cell power system;
- monitoring of the fuel cell power system to assure that it is within a predetermined operational envelope; and
- shut-down of the fuel cell power system in case of any system failure.

A fail-safe shut-down operation results from high stack temperature, high or low stack pressure, low stack voltage, low cell voltage, high differential voltage between adjacent cells, low fluid flow, or a low cooling water reservoir level. Start-up and shut-down includes the enabling/disabling of pumps and solenoids.

Although the MPC performs satisfactorily in carrying out its control functions, it has experienced difficulties in accurately reading the individual cell voltages, resulting in occasional fuel cell fail-safe shut-downs due to false-

IPR2026-00382
Tesla EX1015 Page 8

alarms. In-house testing of the Green Car MPC system has shown that the individual cell voltage readings by the controller are not accurate since they deviate by as much as 15% from actual values, which has caused unnecessary system shut-downs. These inaccurate readings have been caused primarily by the lack of electrical isolation between the sensed analog voltage signals and the MPC, resulting in a common mode voltage problem in the multiplexer controller boards. Note that under no-load conditions, cell number 180 is about 180 V above fuel cell ground. Thus, all 180 input voltage channels to the multiplexer's differential amplifier are scaled so that the voltage readings are within its common mode voltage limit (± 15 V). Both the fuel cell and the controller are tied to a common ground, and there is no electrical isolation between the fuel cell and the controller. The readings become more inaccurate for the higher numbered cells. Energy Partners, Inc. is working with the manufacturer to correct these inaccurate readings.

FUTURE IMPROVEMENTS

Although the Green Car has successsfully proved the concept of a fuel cell powered zero emission vehicle, its performance can be further enhanced. The following is a list of areas that could be improved:

- fuel cell stacks: more efficient, more reliable, improved heat and water management, lower pressure drop, capability to operate at low air pressure.
- drive motor: more power, higher rpm, better efficiency.
- air compressor: more efficient, variable speed motor, lower noise level.
- vehicle weight reduction: reduce number of stacks, reduce number of batteries, eliminate transmission requirement, optimize the supporting equipment.
- hydrogen storage: increase the size and/or improve storage density (without compromising safety).
- MPC: more reliable, isolate all fuel cell analog voltage readings from controller hardware, decrease complexity by reducing the number of monitored (input) signals without sacrificing safety.

CONCLUSIONS

The goal of this project was to power a lightweight passenger vehicle using a PEM hydrogen/air fuel cell system. The proof-of-concept vehicle, known as the Green Car™, was the result of substantially modifying an existing composite two-seater vehicle by installing three stacks producing 15 kW of pollution-free power, along with appropriate instrumentation, programmable controller, electric drive motor, auxiliary battery bank, and support hardware. With a curb weight of 1360 kg, the demonstration vehicle has a top speed of 96 km h^{-1}, a range of 96 km in city driving, and can accelerate from 0 to 48 km h^{-1} in 10 s with its 26 kW electric motor. The vehicle has been successfully driven several hundred kilometers on fuel cell power during the initial test period. The concept has been proved.

It is now clear that PEM fuel cells are serious candidates for the propulsion of zero emission vehicles. Although the performance of the Green Car is not spectacular, it exceeds internal combustion engine powered vehicles in two important characteristics, namely fuel efficiency, and emissions. The realization of the technology to build the Green Car has clearly demonstrated the feasibility of fuel cell powered propulsion systems for transportation vehicles. The potential benefits are enormous, including reduced impacts on environmental quality, reduced dependency on petroleum imports, and the advancement of fuel cell technology into other application areas.

Phase I of the Green Car Project has been completed and Phase II is ready to begin. Its primary objective will be to improve the fuel cell stacks and all support systems. The final goal is to promote PEM fuel cell technology and accelerate its commercialization, making it accessible to all applications requiring a clean and efficient source of energy.

Acknowledgements—This project has been made possible by the generosity and vision of Mr John H. Perry, Jr., the Chairman of the Board of Energy Partners. Support by South Coast Air Quality Management District, Los Angeles, California, is greatly appreciated. The authors would also like to thank all the employees of Energy Partners, Inc. who contributed to the success of this project.